CIVIC

Hatchback, Sedan, Wagon

service manual

1987

specs

FIRST EDITION

INTRODUCTION

How to Use This Manual

This manual is divided into 15 sections. The first page of each section is marked with a black tab that lines up with one of the thumb index tabs on the front and back covers. You can quickly find the first page of each section without looking through a full table of contents. The symbols printed at the top corner of each page can also be used as a quick reference system.

Each section includes:

1. A table of contents, or an exploded view index showing:
   - Parts disassembly sequence.
   - Bolt torques and thread sizes.
   - Page references to descriptions in text.
2. Disassembly/assembly procedures and tools.
3. Inspection.
4. Testing/troubleshooting.
5. Repair.
6. Adjustments.

Special Information

WARNING Indicates a strong possibility of severe personal injury or loss of life if instructions are not followed.

CAUTION: Indicates a possibility of personal injury or equipment damage if instructions are not followed.

NOTE: Gives helpful information.

CAUTION: Detailed descriptions of *standard* workshop procedures, safety principles and service operations are not included. Please note that this manual does contain warnings and cautions against some specific service methods which could cause PERSONAL INJURY, or could damage a vehicle or make it unsafe. Please understand that these warnings cannot cover all conceivable ways in which service, whether or not recommended by American Honda, might be done, or of the possible hazardous consequences of each conceivable way, nor could American Honda investigate all such ways. Anyone using service procedures or tools, whether or not recommended by American Honda, *must satisfy himself thoroughly* that neither personal safety nor vehicle safety will be jeopardized.

First Edition 9/86
Second Print 9/87

Specifications Apply to U.S.A.

HONDA MOTOR CO., LTD.
Service Publication Office

General Information

Chassis and Paint Codes

Vehicle Identification Number

JHMEC231*HS000001

Manufacturer Code
- JH: Japan
- 1H: USA

Car Type
- M or G: Passenger Car

Civic
- EC2: 1300 Hatchback
- EC3: 1500 Hatchback
- EC4: 1500 Sedan
- EC5: 1500 Wagon
- EC6: 1500 Wagon 4WD
- EY1: 1500 Wagonvan

Transmission and Body Type
- 3:4-speed and 5-speed manual/2-Door H/B
- 4:4-speed automatic/2-Door H/B
- 5:5-speed manual/4-Door Sedan
- 6:4-speed automatic/4-Door Sedan
- 7:5-speed manual and 5-speed Plus Super Low/Wagon and Wagonvan
- 8:4-speed automatic/Wagon and Wagonvan

Model
- 1: STD
- 2: DX
- 3: GL
- 4: Si

Check Digit

Model Year
- H: 1987

Factory Code
- S: Suzuka Factory
- C: Sayama Facotory
- A: U.S.A. Facotory

Serial Number

Transmission Number

GW—2500001

Transmission Type
- GW: Manual 5-speed
- GV: Manual 4-speed
- CA: Automatic

Serial Number

Paint Color Codes

Color Code	Color
Hatchback	
NH-512	Polar White
NH-80M	Black burn Metallic
R-63	Rio Red
R-43M	Paisley Red Metallic
YR-60M	Champagne Beige Metallic
B-26MZ	Avignon Blue Metallic Z
Sedan	
NH-512	Polar White
NH-92M	Gothic Gray Metallic
R-43M	Paisley Red Metallic
B-31M	Astral Blue Metallic
Wagon	
NH-512	Polar White
YR-60M	Champagne Beige Metallic
B-31M	Astral Blue Metallic
Wagon 4WD	
B-35M	Montreal Blue Metallic
YR-60M	Champagne Beige Metallic
Wagon van	
NH-512	Polar White
B-31M	Astral Blue Metallic
YR-60M	Champagne Beige Metallic
NH-94M	Quartz Silver Metallic

Engine Serial Number

D15A2-1000001

Engine Type
- D13A2: 1500 Carbureted Engine
- D15A2: 1300 Carbureted Engine
- D15A3: 1500 Fuel Injected Engine

Model Year
- 1: 1987

Emission Group
- 0: California
- 2: 49ST
- 5: 49ST 5-speed manual (Ohio Mode)
- 7: 49ST Automatic (Ohio Mode)
- 9: STD HI ALT

Serial Number

Paint Code

COLOR
NH-80M

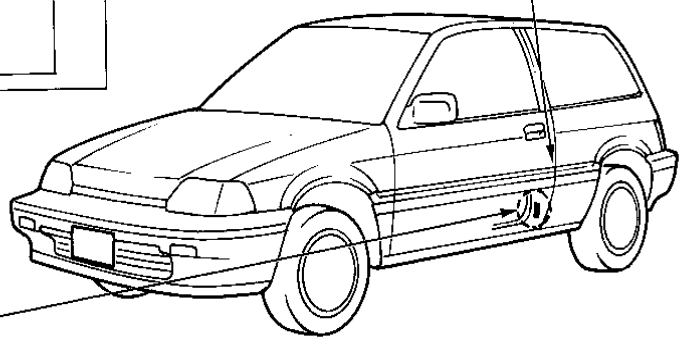

Chassis Number

and Federal Motor Vehicle Safety Standard Certification.

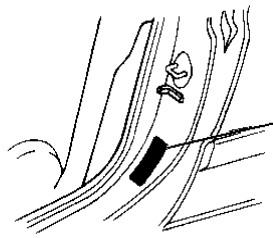

Identification Number Locations

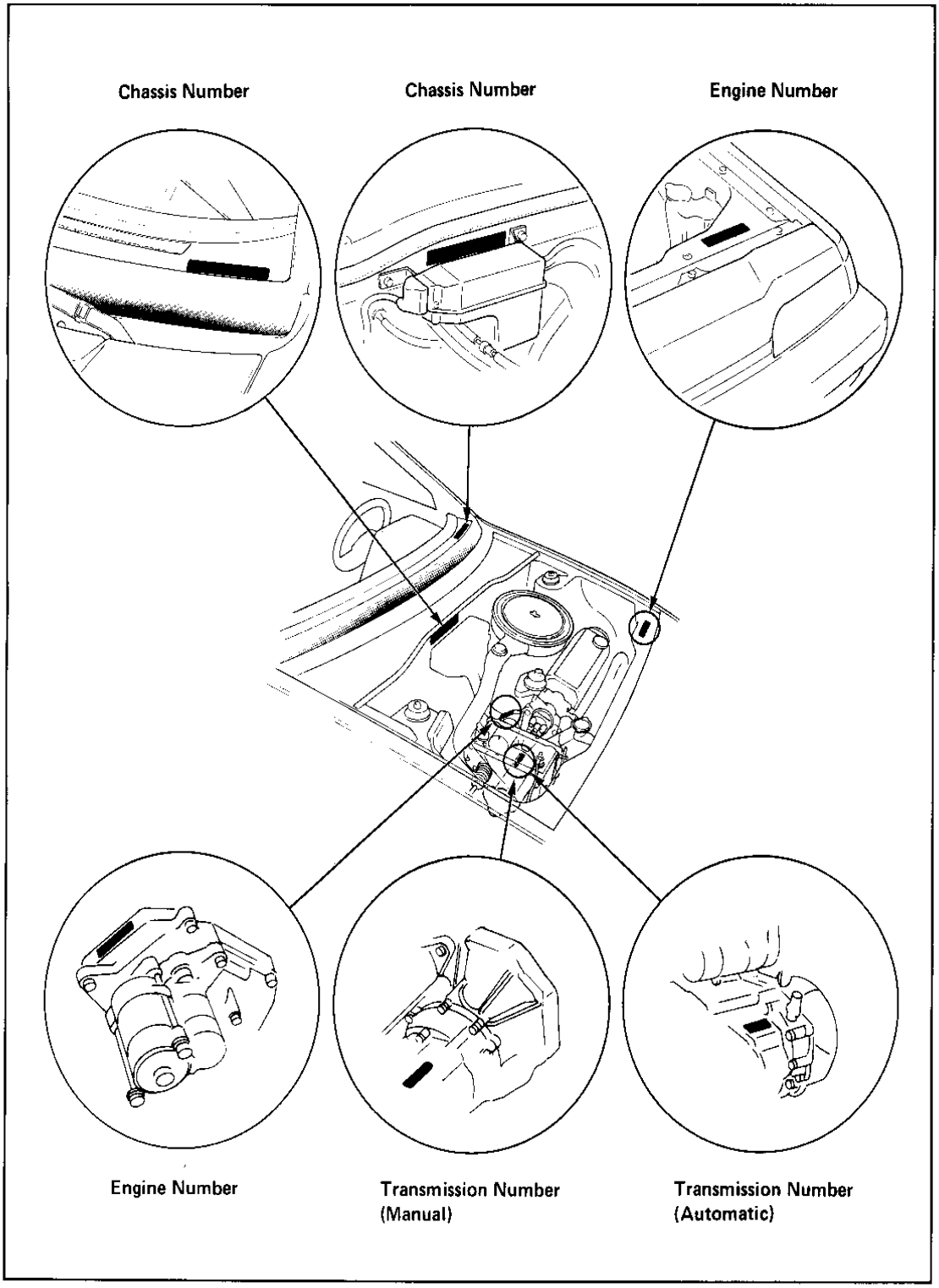

Label Locations

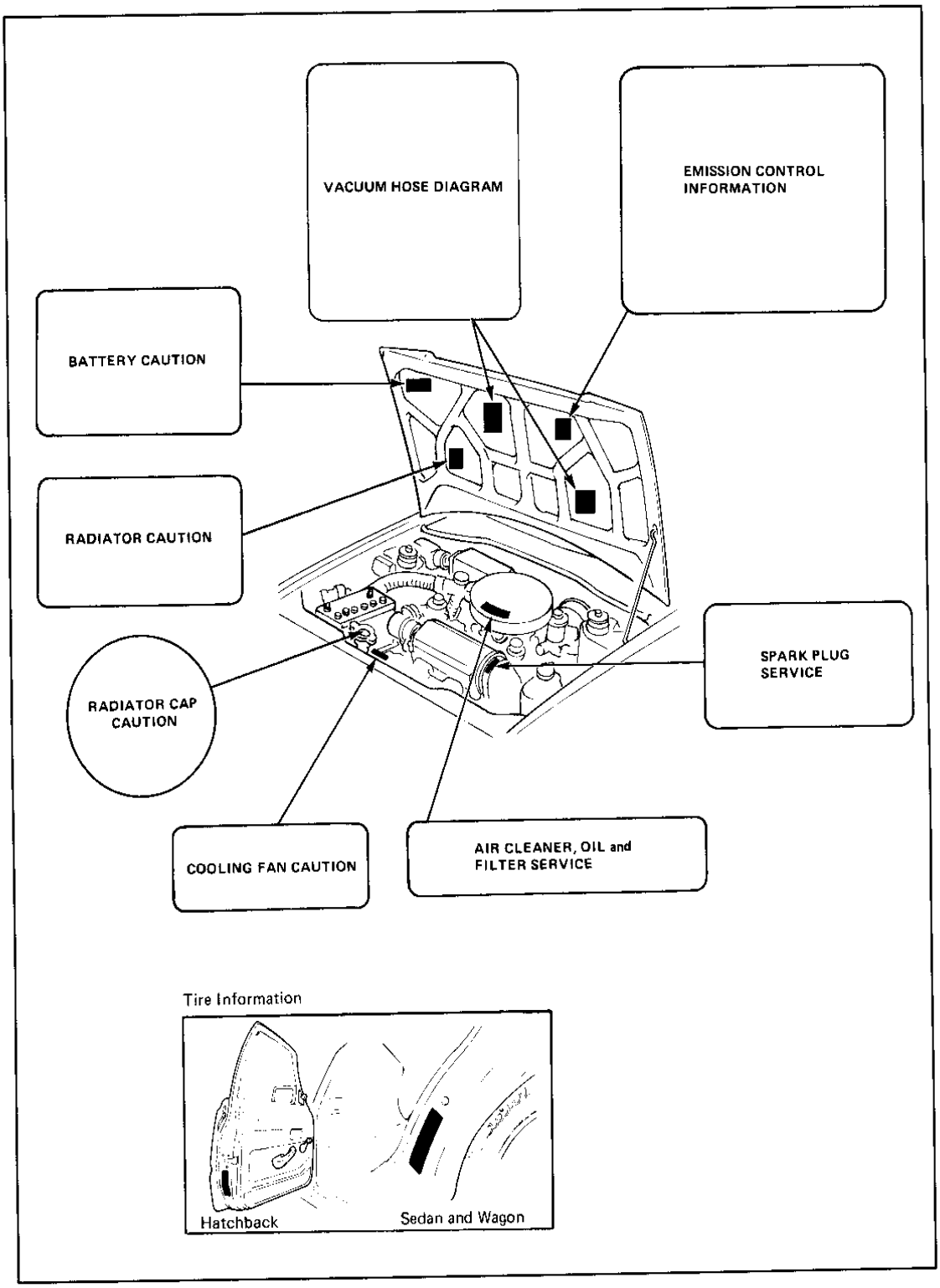

Lift and Support Points

Hoist

1. Place the lift blocks as shown.
2. Raise the hoist a few inches and rock the car to be sure it is firmly supported.
3. Raise the hoist to full height and inspect lift points for solid support.

WARNING When heavy rear components such as suspension, fuel tank, spare tire and trunk lid/hatch are to be removed, place additional weight in the trunk before hoisting. When substantial weight is removed from the rear of the car, the center of gravity may change and can cause the car to tip forward on the hoist.

NOTE: Since each tire/wheel assembly weights approximately 30 lbs, placing the front wheels in the trunk can assist with the weight transfer.

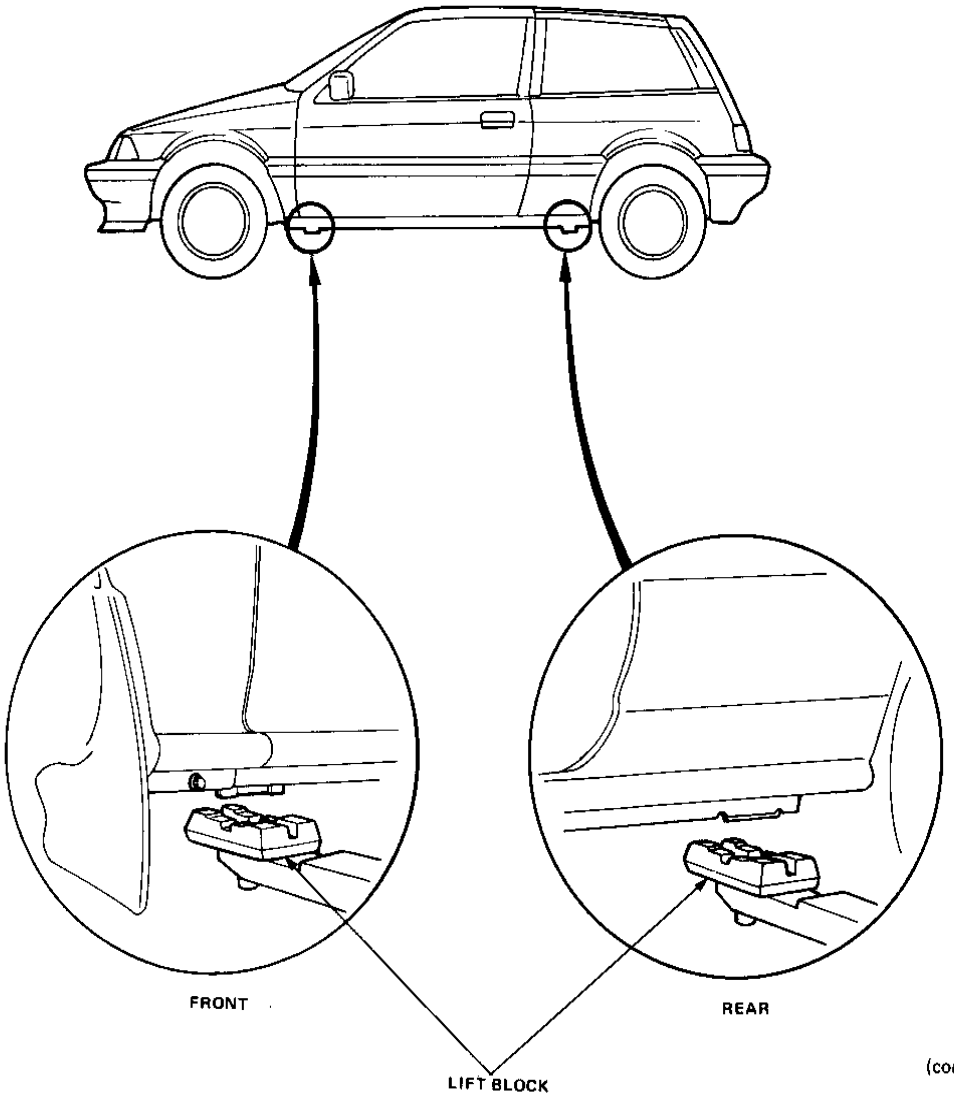

(cont'd)

Lift and Support Points (cont'd)

Floor Jack

1. Set the parking brake and block the wheels that are not being lifted.
2. When lifting the rear of the car, put the gearshift lever in reverse (Automatic in PARK).
3. Raise the car high enough to insert the safety stands.
4. Adjust and place the safety stands as shown on page 1-7 so the car will be approximately level, then lower the car onto them.

WARNING

- **Always use safety stands when working on or under any vehicle that is supported by only a jack.**
- **Never attempt to use a bumper jack for lifting or supporting the car.**

Front

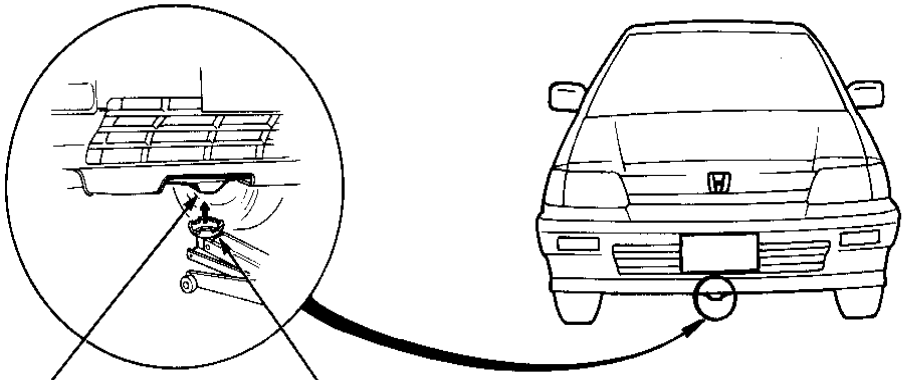

Center the jacking bracket in the middle of jack lift platform.

LIFT PLATFORM

Rear

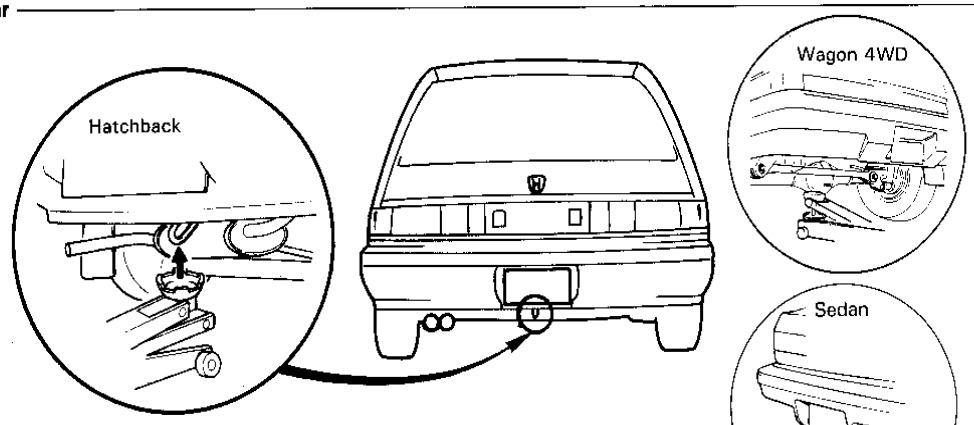

Center the jacking bracket in the middle of jack lift platform.

LIFT PLATFORM

Safety Stands

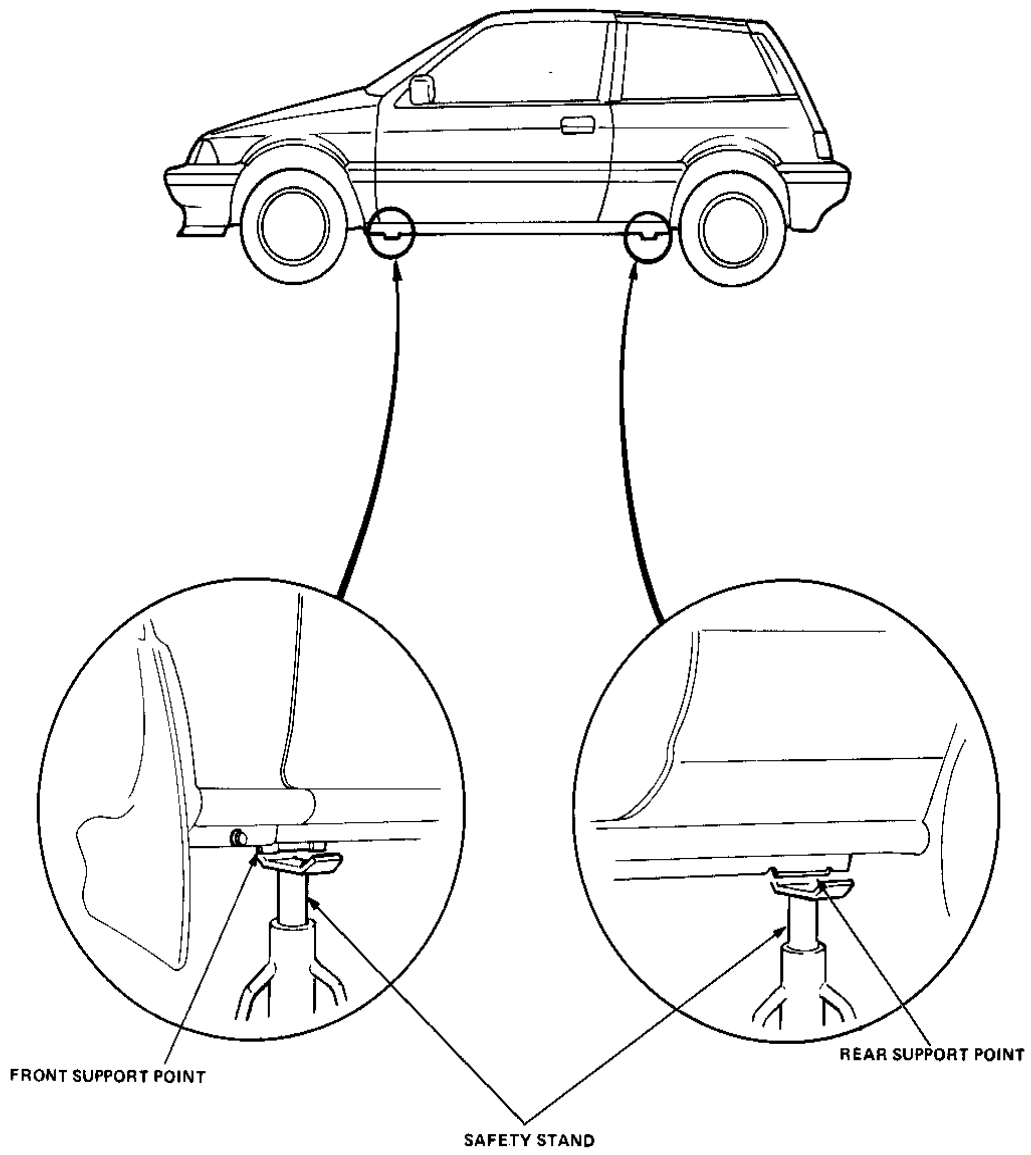

Towing

Towing (Except Wagon 4WD)

If possible, always tow the car with the front wheels off the ground. Do not use the bumpers to lift the car or to support the car's weight while towing. Check local regulations for towing with a chain or frame-mounted tow bar. A chain may be attached to the hook shown in the illustration. Do not attach a tow bar to either bumper.

If the car is to be towed with four wheels on the ground, observe the following precautions:

1. Wheels and axle must not be touching the body or frame.
2. Turn the ignition key to the "I" position and make sure the steering wheel turns freely.
3. Place the transmission in NEUTRAL.
4. Release the parking brake.
5. DO NOT exceed 55 KPH (35 MPH) for distances of more than 80 km (50 miles).

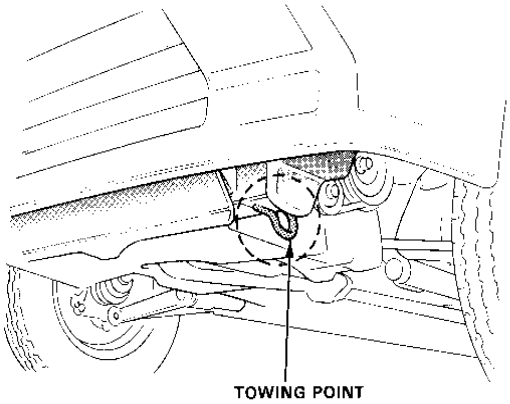

Towing (Wagon 4WD)

If possible, always tow the car with the front wheels off the ground, and 4WD disengaged. Do not use the bumpers to lift the car or to support the car's weight while towing. Check local regulations for towing with a chain or frame-mounted tow bar. A chain may be attached to the hook shown in the illustration. Do not attach a tow bar to either bumper.

If the car is to be towed with front wheels on the ground, observe the following precautions:

1. Wheels and axle must not be touching the body or frame.
2. Turn the ignition key to the "I" position and make sure the steering wheel turns freely.
3. Shift the transmission to NEUTRAL, and disengage the 4WD.
4. Release the parking brake.
5. DO NOT exceed 55 KPH (35 MPH) or tow for distances of more than 80 km (50 miles).

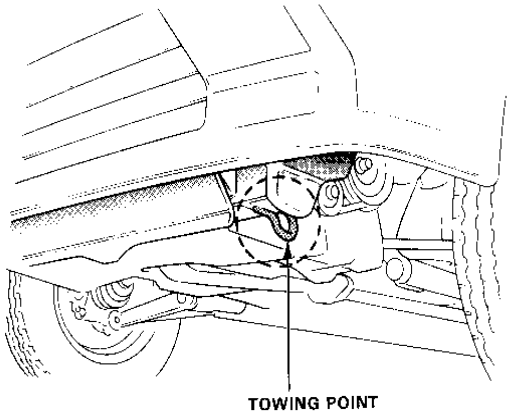

Special Tools

Special Tools

NOTE: Some tools may appear in more than one section of this list if they are used for more than one job.

Engine

TOOL NUMBER	DESCRIPTION	PAGE REFERENCE
07741-0010100	Auxiliary Valve Holder Remove*	6-12
07749-0010000	Driver	7-16
07907-6570001	Auxiliary Chamber T-Wrench, 21 mm*	6-12
07924-PD20002 or 07924—PD20001	Ring Gear Holder	7-4
07936-3710100	Remover Handle*	6-12
07936-3710200	Remover Weight*	6-12
07941-6920002 or 07941-6920001	Ball Joint Remover	(not shown)
07942-6570100 or 07942-6110000	Valve Guide Remove, 6.6 mm	6-18
07947-SB00100	Camshaft Seal Driver	6-21
07947-6340000	Seal Driver	8-7
07948-SB00101	Seal Driver Attachment	7-16
07973-PE00200	Pilot Collar	7-11
07973-PE00302 or 07973-PE300301	Adj. Piston Pin Driver	7-11
07973-PE00400	Piston Pin Base Insert	7-11
07973-SB00100	Piston Base Head	7-11
07973-6570002 or 07973-6570001	Piston Pin Dis/Assembly Tool Set	7-11
07984-6110000 or 07984-657010A	Valve Guide Reamer, 6.6 mm	6-19

*Carbureted Engine only

Fuel and Emissions

KS-AHM-32-003	Digital Multimeter**	11-54
A9295-237-81167	Vacuum/Pressure Gauge, 0-4 in Hg	11-86**, 12-50*
A973X-041-XXXXX or ST-AH-260-MC7	Vacuum Pump/Gauge, 0-30 in Hg	11-10
07406-0040001	Fuel Pressure Gauge**	11-74
07614-0050100	Fuel Line Clamp*	11-18
07920-SB20000	Fuel Sender Wrench	11-19
07999-PD6000A	System Checker Harness**	11-54

*Carbureted Engine **Fuel-Injected Engine

Clutch

07708-0010102	10 mm T-Wrench	13-6
07924-PD20002 or 07924-PD20001	Ring Gear Holder	13-5
07974-PE60000	Clutch Disc Alignment Tool	13-5

Manual Transmission 〈2WD〉

TOOL NUMBER	DESCRIPTION	PAGE REFERENCE	
		4 speed	5 speed
07746-0010100	Attachment, 32 × 35 mm	14-22	15-24
07746-0010300	Attachment, 42 × 47 mm	14-21	15-23
07749-0010000	Driver	14-20	15-22
07923-6890101	Mainshaft Holder, Manual	14-12	15-13
07936-6340000 or 07736-A01000A	Bearing/Transmission Case Puller or Adjustable Bearing Remover 25 — 40mm	14-9	15-10
07946-6920100 or 07947-6710100	Bearing Driver Attachment	14-22	15-24
07947-6110500	Seal Driver Attachment	14-31	15-34
07947-6340500	Driver Attahcment, E	14-20	15-22

Manual Transmission〈4WD〉

07746-0010200	Attachment, 37 × 40 mm	15-83
07746-0010300	Attachment, 42 × 47 mm	15-83
07746-0010400	Attachment, 52 × 55 mm	15-64
07746-0010500	Attachment, 62 × 68 mm	15-64
07746-0010600	Attachment, 72 × 75 mm	15-82
07746-0030400	Attachment, 35 mm	15-68
07749-0010000	Driver	15-62
07926-SD90000	Flange Holder	15-63
07936-6340000 or 07736-A01000A	Bearing/Transmission Case Puller or Adjustable Bearing Remover 25 — 40mm	15-84
07936-8890101	Bearing Remover Set	15-83
07947-SD90100	Oil Seal Driver Attachment	15-99
07947-6110400	Oil Seal Driver Attachment	15-99
07947-6340400	Driver Attachment, A	15-62
07960-1870100	Spring Compressor Attachment	15-66
07965-SA00600	Front Hub Dis/Assembly Tool, F	15-69
07965-6340301	Front Wheel Bearing Dis/Assembly Tool Base, A	15-68
07973-SD90400	Driven Gear Dummy Shaft	15-65
07973-SD90500	Drive Gear Gauge	15-66

Automatic Transmission

A973X-041-XXXXX	Vacuum Pump/Gauge, 0-30 in Hg	16-69
07GAC-PG40100 or 07GAC-PF40100	Transmission Housing Puller	16-15
07GAE-PG40000	Clutch Spring Compressor Set	16-36
*07GAE-PG40100	*Compressor Attachment	16-36
*07GAE-PG40200	*Compressor Bolt Assembly } or 07960-6120000+ 07960-6890100	16-36
*07960-6120100	*Compressor Attachment	16-36
07406-0020003 or 07406-0020002	Oil Pressure Gauge Set	16-6
07406-0070000	Low Presure Gauge	16-6
07736-A01000A or 07GAC-PF40210	Adj. Bearing Remover, 25-40mm	16-46
07746-0010500	Attachment, 62×68mm	16-46
07749-0010000	Driver	16-45
07923-6890202	Mainshaft Holder, Automatic	16-12 and 60
07936-6340000	Bearing/Transmission Case Puller	16-46
07947-6110500	Seal Driver Attachment	16-45
07947-6340201	Driver Attachment, B	16-46
07947-6340500	Driver Attachment, E	16-45
07974-6890300	†Throttle Control Cable Adjustment Gauge	16-69

*Included in Clutch Spring Compressor Set T/N 07GAC-PG40100 †Carbreted models Only.

(cont'd)

Special Tools

Front Differential

TOOL NUMBER	DESCRIPTION	PAGE REFERENCE
07746-0030100	Driver, 40mm I.D.	17-5
07746-0030400	Attachment, 35 mm	17-5
07749-0010000	Driver	17-9
07947-SD90100	Oil Seal Driver Attachment	17-10
07947-6110400	Oil Seal Driver Attachment	17-10
07947-6110500	Seal Driver Attachment	17-10
07947-6340500	Driver Attachment, E	17-9

Rear Differential〈4WD〉

07746-0010600	Attachment, 72 × 75 mm	17-22
07749-0010000	Driver	17-22
07926-SD90000	Flange Holder	17-17
07946-MB00000	Driver	17-24
07947-SD90100	Oil Seal Driver Attachment	17-22
07965-SB00100	Ball Joint Removal/Installer	17-28
07965-SB00200	Ball Joint Remover Base	17-21
07973-SD90300	Pinion Center Pin	17-16
07973-SD9060A	Collar, A	17-22
07973-SD9070A	Collar, B	17-22
07973-SD9080A	Pinion Block/Setting Bolt	17-22
07973-SD9090A	Pinion Dummy Shaft	17-22
07973-SD9100A	Height Gauge Disc	17-23
07973-SD9110A	Height Gauge Arbor	17-23

Drive shaft〈2WD〉

07941-6920002	Ball Joine Remover	(not shown)

Driveshaft〈4WD〉

07GAA-SC20100	10 mm Universal Holder	18-22
07GAD-SE01000	Oil Seal Driver Attachment	18-20
07HAB-SD90100	Flauge Holder	18-23
07708-0010102	10 mm T-Wrench	18-22
07746-0010400	Attachment, 52 ×55 mm	18-19
07746-0010500	Attachment, 62 × 68 mm	18-20
07746-0040900	Pilot, 40 mm	18-18
07749-0010000	Driver	18-18
07921-0010100	Flare Nut Wrench	18-28
07926-SD90000	Flange Holder	18-23
07965-SD90100	Support Base	18-18
07965-SD90200	Support Collar	18-20
07965-6340301	Front Wheel Bearing Dis/Assembly Tool Base, A	18-29

Steering 〈Manual〉

07916-6920100	Steering Gearbox Locknut Wrench, 40 mm	19-3
07941-6920002	Ball Joint Remover	19-4
07974-SA50800	Ball Joint Boot Clip Installation Guide, B	19-8

Special Tools

Steering〈Power〉

TOOL NUMBER	DESCRIPTION	PAGE REFERENCE
07406-0010001	P/S Pressuer Gauge Set	19-29
*07406-0010300	*Oil Pressuer Valve	19-29
*07406-0010401	*Pressure Gauge	19-29
07406-0010800	P/S Pump Joint Adaptor	19-29
07406-0010900	P/S Hose Joint Adaptor	19-29
07725-0030000 or 07725-0010101	Universal Holder	19-32
07746-0010300	Attachment, 42×47mm	19-54
07749-0010000	Driver	19-48
07900-SA50000	P/S Seal Replacement Tool Set	(not shown)
**07974-SA50100	**Piston Seal Ring Guide	19-56
**07974-SA50200	**Piston Seal Ring Sizing Tool	19-56
**07974-SA50300	**Cylinder End Packing Slider	19-57
**07974-SA50400	**End Seal Guide	19-59
**07974-SA50500	**End Cover Seal Guide	19-39
**07974-SA50600	**Dust Seal Guide	19-48
07908-6920000	Steering Gearbox Locknut Wrench	19-62
07916-SA50001	Steering Gearbox Locknut, 40mm	19-28
07941-6920002	Ball Joint Remover	19-41
07947-6340300	Driver Attachment	19-48
07953-7190000	Collar Driver	19-39
07973-6920001	P/S Column Adjustment Guide	19-26
07974-SA50800	Ball Joint Clip Installation Guide, B	(not shown)
07974-SB40100	P/S shread Protector	19-32

*Included in P/S Pressure Gauge Set T/N 07406-0010001
**Included in P/S Seal Replacement Tool Set T/N 07900-SA50000

Suspension

07GAF-PH0010A or 07965-SB2100B	Transmission Support Bracket	20-19
07410-0010200	Wheel Alignment Gauge ATT.,B	20-3
07746-0010600	Attachment, 72×75mm	20-11
07749-0010000	Driver	20-11
07941-6920002	Ball Joint Remover	20-9
07947-6340000	Seal Driver	20-11
07965-SA00600	Front Hub Dis/Assembly Tool,F	20-15
07965-SB2000A	Lower Control Arm R & R Set	(not shown)
*07965-SB2010A	*Remover Shaft	20-19
*07965-SB20200	*Collars	20-19
*07965-SB2030A	*Receiver	20-19
*07965-SB2040A	*Assembly Pilot	20-20
*07965-SB2050A	*Bolt Assembly	20-19
*07965-SB2060A	*Installer	20-20
*07965-SB2070A	*Engine Mount Spacer	20-18
*07965-SB2080A	*Thrust Bearing	20-19
*07965-SB2090A	*Nut	20-19
07965-SB40000	Lower Bushing Driver	20-14
07965-6340100	Front Hub Dis/Assembly Tool Pin, A	20-10
07965-6340301	Front Wheel Bearing Dis/Assembly Tool Base, A	20-10
07965-6920101	Front Hub Dis/Assembly Tool,A	20-11
07965-6920201	Front Hub Dis/Assembly Tool,B	20-11
07965-6920500	Front Hub Dis/Assembly Tool,E	20-11
07974-SA50700	Ball Joint Boot Clip Installation Guide,A	20-12
07974-SA50800	Ball Joint Boot Clip Installation Gudie,B	20-12

*Included in Lower Control Arm R & R set T/N 07965-SB2000A

(cont'd)

Special Tools

Brakes

TOOL NUMBER	DESCRIPTION	PAGE REFERENCE
07749-0010000	Driver	21-20
07783-0070001 or	Brake Disc Grinder or	(not shown)
108-0005-04 108-0120-05	} Kwik-Lathe with Power Feed	Available From kwik-way Manufacturing Co.
07914-SA50000	Snap-ring Pliers	21-13
07947-6890300	Driver Attachment, C	21-20
07975-SA50002 or 07975-SA50001	Brake Booster Rod Adjustment Gauge	21-23

Body

07GAZ-SE30100	Torsion Rod Assembly Tool	22-73

Heater and Air Conditioner

07GAB-PJ60100 or 07923-PB80001	A/C Clutch Holder	24-11
07934-PB80001	A/C Clutch Puller	24-11

Engine Electrical

A973X-041-XXXXX or ST-AH-260-MC7	Vacuum Pump/Gauge, 0-30 in Hg	25-33
07614-0050100	Fuel Line Clamp	25-33

specs

Specifications

Standards and Service Limits

°Fuel-Injected Engine *1300 only

Cylinder Head/Valve Train — Section 6

	MEASUREMENT			STANDARD (NEW)	SERVICE LIMIT
Compression	300 rpm and wide-open throttle			Nominal	1,127 kPa (11.5 kg/cm², 164 psi) °1,274 kPa (13.0 kg/cm², 185 psi)
				Minimum	931 kPa (9.5 kg/cm², 135 psi) °1,078 kPa (11.0 kg/cm², 156 psi)
				Maximum variation	196 kPa (2 kg/cm², 28 psi)
Cylinder head	Warpage			—	0.05 (0.002)
	Height			90 (3.54)	89.8 (3.53)
Camshaft	End play			0.05–0.15 (0.002–0.006)	0.5 (0.02)
	Oil clearance			0.050–0.089 (0.002–0.004)	0.15 (0.006)
	Runout			0.03 (0.001) max.	0.06 (0.002)
	Cam lobe height	Manual	(aux.) IN	44.315 (1.7447)	—
			(main) IN	40.370 (1.5894) °40.865 (1.6089) *39.739 (1.5645)	—
			(main) EX	40.391 (1.5902) *39.762 (1.5654)	—
		Automatic	(aux.) IN	44.315 (1.7447)	—
			(main) IN	40.370 (1.5894) °40.884 (1.6096) *39.739 (1.5645)	—
			(main) EX	40.391 (1.5902) *39.762 (1.5654)	—
Valve	Valve clearance		(aux.) IN	0.17–0.22 (0.007–0.009)	—
			(main) IN	0.17–0.22 (0.007–0.009)	—
			(main) EX	0.22–0.27 (0.009–0.011)	—
	Valve stem O.D.		(aux.) IN	6.572–6.587 (0.2587–0.2593)	6.54 (0.257)
			(main) IN	6.58–6.59 (0.2591–0.2594)	6.55 (0.258)
			(main) EX	6.55–6.56 (0.2579–0.2583)	6.52 (0.257)
	Stem-to-guide clearance		(aux.) IN	0.023–0.058 (0.001–0.002)	0.08 (0.003)
			(main) IN	0.04–0.10 (0.002–0.004)	0.16 (0.006)
			(main) EX	0.10–0.16 (0.004–0.006)	0.22 (0.009)
	Stem installed height		(aux.) IN	33.3 (1.311)	34.2 (1.347)
			(main) IN	48.16 (1.896)	48.95 (1.927)
			(main) EX	48.16 (1.896)	48.95 (1.927)
Valve seat	Width		(aux.) IN	0.353–0.494 (0.014–0.019)	1.0 (0.04)
			(main) IN and EX	1.25–1.55 (0.049–0.061)	2.0 (0.08)
Valve spring	Free length		(aux.) IN	31.7 (1.25)	31.0 (1.22)
			(main) IN and EX	47.6 (1.87) *49.13 (1.93)	46.6 (1.83) *48.1 (1.89)
			Inner	°44.02 (1.733)	
			Outer	°47.45 (1.868)	
		Squareness Inner and Outer		—	1.75 (0.069)
Valve guide	I.D.		(aux.) IN	6.61–6.63 (0.260–0.261)	6.65 (0.262)
			(main) IN	6.61–6.63 (0.260–0.261)	6.65 (0.262)
			(main) EX	6.61–6.63 (0.260–0.261)	6.65 (0.262)
Rocker arm	Arm-to-shaft clearance			0.018–0.054 (0.0007–0.0021)	0.08 (0.003)

Engine Block — Section 7

	MEASUREMENT		STANDARD (NEW)	SERVICE LIMIT
Cylinder block	Warpage of deck surface		0.07 (0.003) max.	0.10 (0.004)
	Bore diameter		74.00–74.02 (2.9134–2.9142)	74.10 (2.917)
	Bore taper		0.007–0.012 (0.0003–0.0005)	0.05 (0.002)
	Reboring limit		—	0.5 (0.02)
Piston	Skirt O.D.	At 16 mm (0.63 in) from bottom of skirt	73.97–73.99 (2.9122–2.9130)	73.96 (2.912)
	Clearance in cylinder		0.01–0.05 (0.0004–0.0020)	0.07 (0.003)
	Piston-to-ring clearance	(Top)	0.03–0.06 (0.0012–0.0024)	0.13 (0.005)
		(Second)	0.030–0.055 (0.0012–0.0022)	0.13 (0.005)
Piston ring	Ring end gap (top and second)		0.15–0.35 (0.006–0.014)	0.6 (0.02)
	Ring end gap (oil)		0.20–0.60 (0.008–0.024) 0.30–0.90 (0.012–0.035)	0.8 (0.03) 1.1 (0.04)
Connecting rod	Pin-to-rod interference		0.02–0.04 (0.0008–0.0016)	0.02 (0.0008)
	Large end bore diameter		Nominal 45 (1.77) *41 (1.61)	—
	End play installed on crankshaft		0.15–0.30 (0.006–0.012)	0.40 (0.016)

3-2

specs

Unit: mm (in.)

Engine Block — Section 7

	MEASUREMENT	STANDARD (NEW)	SERVICE LIMIT
Crankshaft	Main journal diameter	49.976–50.000 (1.9676–1.9685)	—
		*44.976–45.000 (1.7707–1.7717)	—
	Taper/out-of-round, main journal	0.005 (0.0002) max.	0.010 (0.0004)
	Rod journal diameter	41.976–42.000 (1.6526–1.6535)	—
		*37.976–38.000 (1.4951–1.4961)	—
	Taper/out-of-round, rod journal	0.005 (0.0002) max.	0.010 (0.0004)
	End play	0.10–0.35 (0.004–0.014)	0.45 (0.018)
	Runout	0.03 (0.0012) max.	0.06 (0.002)
Bearings	Main bearing-to-journal oil clearance	0.024–0.042 (0.0009–0.0017)	0.07 (0.003)
	Rod bearing-to-journal oil clearance	0.020–0.038 (0.0008–0.0015)	0.07 (0.003)

Engine Lubrication — Section 8

	MEASUREMENT		STANDARD (NEW)	SERVICE LIMIT
Engine oil	Capacity ℓ (US. qt., Imp. qt.)		3.8 (4.0, 3.3) After engine disassembly 3.5 (3.7, 3.1) After oil change, including oil filter 3.0 (3.2, 2.6) After oil change, without oil filter	
Oil pump	Displacement		35 ℓ (9.2 US gal., 7.7 Imp gal.) 3,000 rpm	
	Inner-to-outer rotor radial clearance		0.14 (0.006) max.	0.2 (0.008)
	Pump body-to-rotor radial clearance		0.10–0.175 (0.004–0.007)	0.2 (0.008)
	Pump body-to-rotor side clearance		0.03–0.08 (0.001–0.003)	0.15 (0.006)
Relief valve	Pressure setting	80°C (176°F) Idle	147 kPa (1.5kg/cm², 21psi)	
		3,000 rpm	333–340 kPa (3.4–4.2kg/cm², 48–60psi)	

Cooling — Section 10

	MEASUREMENT	STANDARD (NEW)
Radiator	Capacity (incl. heater) ℓ (US. Gal., Imp. Gal.)	1300: 4.4 (1.2, 1.0) Includes reservoir tank 0.4 (0.11, 0.09) 1500: 5.5 (1.5, 1.2) Includes reservoir tank 0.4 (0.11, 0.09)
	Pressure cap opening pressure	74–103 kPa (0.75–1.05 kg/cm², 11–15 psi)
Thermostat	Starts to open	76–80°C (169–176°F)
	Full open	91°C (196°F)
	Valve lift at full open	8 (0.31) max.
Cooling fan	Fan-to-core clearance	ND 22 mm (0.87 in.) TOYO 17.5 mm (0.69 in.)
	Thermoswitch "ON" temperature	88.5–91.5°C (191–197°F)
	Thermoswitch "OFF" temperature	85.5–86.5°C (186–188°F)

Fuel — Section 11

	MEASUREMENT		STANDARD (NEW)			
Fuel pump (Carbureted Engine)	Delivery pressure		16.7–22.5 kPa (0.17–0.23 kg/cm², 2.4–3.3 psi)			
	Displacement		170 cc/min at camshaft rpm 300 rpm			
Fuel pump (Fuel-Injected Engine)	Delivery pressure		250 kPa (2.55kg/cm², 36psi)			
	Displacement		230 cc/min in 10 seconds			
	Relief valve opening pressure		441–588 kPa (4.5–6.0 kg/cm², 64–85 psi)			
Pressure Regulator (Fuel-Injected Engine)	Pressure		245–255 kPa (2.5–2.6kg/cm², 35–37 psi)			
Fuel tank	Capacity	Hatchback	45 ℓ (11.9 US. Gal., 9.9 Imp. Gal.)			
		Sedan, Wagon	46 ℓ (12.2 US. Gal., 10.1 Imp. Gal.)			
Valve body or Carburetor	Fast idle	Carbureted Engine	2,500–3,500 rpm			
		Fuel-Injected Engine	1,250–2,250 rpm			
	Idle speed (rpm) with headlights and cooling fan off	Model		CAL	49ST and HI ALT	
		Si		750 ± 50		
		1300		650 ± 50	650 ± 50	750 ± 50 ↕ 800 ± 50
		1500	Manual	700 ± 50 750±50*	700 ± 50 ↕ 750 ± 50	
			Automatic	700 ± 50	650 ± 50 ↕ 700 ± 50	
	• ↕: The lower number is if idle is measured at high altitude: the higher number is if idle is measured at low altitude.					
	Idle CO			0.1%		

*Wagon 4WD

(cont'd)

Standards and Service Limits (cont'd)

Clutch — Section 13

	MEASUREMENT		STANDARD (NEW)	SERVICE LIMIT
Clutch pedal	Pedal height		179 (7.05) to floor	—
	Stroke		135–140 (5.3–5.5)	—
	Pedal play		16–21 (0.63–0.83)	—
	Disengagement height	Wagon	78 (3.1) min. to floor 48 (1.9) min. to carpet	
		Others	83 (3.3) min. to floor 53 (2.1) min. to carpet	
Clutch arm	Release arm adjustment		4.0–5.0 (0.16–0.20)	—
Flywheel	Clutch surface runout		0.05 (0.002) max.	0.15 (0.006)
Clutch plate	Rivet head depth		1.3 (0.05) min.	0.2 (0.008)
	Surface runout		0.8 (0.03) max.	1.0 (0.04)
	Radial play in splines		0.036–0.112 (0.0014–0.0044)	0.5 (0.02)
	Thickness		8.1–8.8 (0.32–0.35)	5.7 (0.22)
Clutch release bearing holder	I.D.	Wagon 4WD	35.040–35.079 (1.3795–1.3811)	35.11 (1.382)
		Others	29.000–29.059 (1.142–1.144)	29.20 (1.150)
	Holder-to-guide sleeve clearance	Wagon 4WD	0.090–0.168 (0.0035–0.0066)	0.24 (0.009)
		Others	0.040–0.132 (0.0016–0.0052)	0.2 (0.008)
Clutch cover	Uneveness of diaphragm spring	Wagon 4WD	0.8 (0.03) max.	1.0 (0.04)
		Others	0.6 (0.02) max.	1.0 (0.04)

Manual Transmission (Except Wagon 4WD) — Section 14 and 15

	MEASUREMENT		STANDARD (NEW)	SERVICE LIMIT
Transmission oil	Capacity ℓ (US. qt., Imp. qt.)		2.5 (2.6, 2.2) at assembly 2.3 (2.4, 2.0) at oil change	
Mainshaft	End play		0.11–0.18 (0.004–0.007)	—
	Diameter of needle bearing contact area		27.997–28.010 (1.1022–1.1028)	27.94 (1.100)
	Diameter of fifth gear contact area		24.987–25.000 (0.9837–0.9843)	24.93 (0.981)
	Diameter of 6222 ball bearing contact area		21.987–22.000 (0.8656–0.8661)	21.93 (0.863)
	Diameter of 6304 ball bearing contact area		19.983–19.996 (0.7867–0.7872)	19.93 (0.7846)
	Runout		0.04 (0.0016) max.	0.10 (0.04)
Mainshaft fifth gear	I.D.		30.007–30.020 (1.1814–1.1819)	30.07 (1.184)
	End play		0.05–0.53 (0.002–0.0021)	—
Countershaft	End play		0.35 (0.0138)	0.65 (0.026)
	Diameter of needle bearing contact area		30.004–30.017 (1.1813–1.1818)	29.94 (1.179)
	Diameter of ball bearing contact area		24.9935–25.0065 (0.9840–0.9845)	24.94 (0.982)
	Diameter of low gear contact area		31.984–32.000 (1.2592–1.2598)	31.93 (1.257)
	Runout		0.04 (0.0016)	0.10 (0.004)
Countershaft 1st gear	I.D.		37.009–37.025 (1.4570–1.4577)	37.08 (1.460)
	End play		0.03–0.08 (0.0012–0.0031)	0.18 (0.007)
Countershaft 2nd 3rd/4th gear	I.D.		37.009–37.025 (1.4570–1.4577)	37.08 (1.460)
	End play		0.05–0.12 (0.0020–0.0047)	0.18 (0.007)
Spacer collar	2nd, 3rd	I.D.	25.980–25.991 (1.0228–1.0233)	26.04 (1.025)
		O.D.	31.989–32.000 (1.2594–1.2598)	31.93 (1.257)
		Length	28.01–28.13 (1.1028–1.1074)	—
	4th	I.D.	25.007–25.037 (0.9845–0.9857)	25.08 (0.987)
		O.D.	31.989–32.000 (1.2594–1.2598)	31.93 (1.257)
		Length	29.01–29.13 (1.1455–1.1502)	—
Reverse idle gear	I.D.		15.016–15.043 (0.5912–0.5922)	15.08 (0.594)
	Gear-to-reverse gear shaft clearance		0.032–0.077 (0.0013–0.0030)	0.14 (0.006)
Synchronizer ring	Ring-to-gear clearance (ring pushed against gear)		0.73–1.18 (0.028–0.046)	0.4 (0.016)
Shift fork	Synchronizer sleeve gear		6.95–7.05 (0.2736–0.2776)	—
	Fork-to-synchronizer sleeve clearance		0.45–0.65 (0.018–0.026)	1.0 (0.04)
Reverse shift fork	End gap		6.9–7.0 (0.27–0.28)	—
	Fork-to-reverse idler gear clearance		0.1–0.3 (0.004–0.012)	0.7 (0.03)
	Groove width		7.05–7.25 (0.278–0.285)	—
	Fork-to-fifth/reverse shift shaft clearance		0.05–0.35 (0.002–0.014)	0.5 (0.02)
Shift arm B	I.D.		11.8–12.0 (0.47–0.48)	—
	Shift arm-to-shift guide clearance		0.05–0.35 (0.002–0.014)	0.8 (0.03)

specs

Unit: mm (in.)

Manual Transmission (Wagon 4WD) — Section 15

	MEASUREMENT	STANDARD (NEW)	SERVICE LIMIT
Transmission oil	Capacity ℓ (US. qt., Imp. qt.)	2.4 (2.3, 1.9) at assembly 2.3 (2.4, 2.0) at oil change	
Mainshaft	End play Diameter of needle bearing contact area Diameter of 3rd gear contact area Diameter of 63/28C ball bearing contact area Diameter of 6306/25 ball bearing contact area Runout	0.14—0.21 (0.006—0.008) 27.987—28.000 (1.1018—1.1024) 34.984—35.000 (1.3773—1.3780) 27.987—28.000 (1.1018—1.1024) 24.987—25.000 (0.9837—0.9843) 0.04 (0.0016) max.	—— 27.93 (1.100) 34.93 (1.375) 27.93 (1.100) 24.93 (0.981) 0.10 (0.004)
Main 3rd gear	I.D. End play Thickness	40.009—40.025 (1.5752—1.5758) 0.06—0.21 (0.002—0.008) 32.42—32.47 (1.276—1.278)	40.07 (1.578) 0.3 (0.01) 32.3 (1.27)
Main 4th gear	I.D. End play Thickness	40.009—40.025 (1.5752—1.5758) 0.06—0.21 (0.002—0.008) 30.92—30.97 (1.217—1.219)	40.07 (1.578) 0.3 (0.01) 30.8 (1.21)
Main 5th gear	I.D. End play Thickness	40.009—40.025 (1.5752—1.5758) 0.06—0.21 (0.002—0.008) 30.42—30.47 (1.198—1.200)	40.07 (1.578) 0.3 (0.01) 30.3 (1.19)
Countershaft	End play Diameter of needle bearing contact area Diameter of ball bearing contact area Diameter of SL3 gear contact area Runout	0.05—0.30 (0.002—0.012) 29.000—29.015 (1.1417—1.1423) 24.987—25.000 (0.9837—0.9843) 30.464—30.480 (1.1994—1.2000) 0.04 (0.0016) max.	0.5 (0.02) 28.94 (1.139) 24.93 (0.981) 30.41 (1.197) 0.10 (0.004)
Counter 1st gear	I.D. End play Thickness	50.009—50.025 (1.9689—1.9695) 0.03—0.08 (0.001—0.003) 32.95—33.00 (1.297—1.299)	50.07 (1.971) 0.18 (0.007) 32.83 (1.293)
Counter 2nd gear	I.D. End play Thickness	50.009—50.025 (1.9689—1.9695) 0.03—0.10 (0.001—0.004) 32.92—32.97 (1.296—1.298)	50.07 (1.971) 0.18 (0.007) 32.8 (1.29)
Main 4th gear & 5th gear distance collar	I.D. O.D. Width	28.002—28.012 (1.1024—1.1028) 34.989—35.000 (1.3775—1.3780) 26.03—26.08 (1.025—1.027)	28.06 (1.105) 34.93 (1.375) 26.01 (1.024)
Countershaft 2nd gear distance collar	I.D. O.D. Width	36.48—36.49 (1.436—1.437) 43.989—44.000 (1.7318—1.7323) 28.98—29.05 (1.140—1.144)	36.54 (1.439) 43.93 (1.730) Adjust
Reverse idle gear	I.D. Gear-to-shaft clearance	20.016—20.043 (0.7880—0.7890) 0.036—0.084 (0.0014—0.0033)	20.08 (0.791) 0.14 (0.006)
SL1 shaft	Clearance of needle bearing contact area	23.984—23.993 (0.9443—0.9446)	23.93 (0.942)
SL1 gear	I.D. Thickness	30.000—30.013 (1.1811—1.1816) 62.95—63.00 (2.478—2.480)	29.94 (1.179) 62.83 (2.474)
SL2 shaft	Diameter of needle bearing contact area Diameter of ball bearing contact area 62/28 (Clutch Housing Side) 6204U (Transmission housing side) Runout	25.002—25.015 (0.9843—0.9848) 27.987—28.000 (1.1018—1.1024) 19.987—20.000 (0.7869—0.7874) 0.04 (0.0016) max.	24.94 (0.982) 27.93 (1.100) 19.93 (0.785) 0.10 (0.004)
SL2 gear	I.D. End play Thickness	37.009—37.025 (1.4570—1.4577) 0.03—0.16 (0.001—0.006) 34.42—34.47 (1.355—1.357)	37.07 (1.459) 0.24 (0.009) 34.3 (1.35)
SL3 gear	Diameter of needle bearing contact area Width of needle bearing contact area	43.984—44.000 (1.7318—1.7323) 31.03—31.08 (1.222—1.224)	43.93 (1.730) 31.01 (1.221)
SL2 gear distance collar	I.D. O.D. Width	23.007—23.020 (0.9058—0.9063) 31.989—32.000 (1.2594—1.2598) 31.00—31.03 (1.220—1.222)	23.07 (0.908) 31.93 (1.257) 30.98 (1.220)
Transfer shaft	Diameter of needle bearing contact area Diameter of taper bearing contact area Width of transfer drive bevel gear contact area Runout	27.987—28.000 (1.1018—1.1024) 45.01—45.05 (1.772—1.774) 35.002—35.018 (1.3780—1.3787) 0.04 (0.0016) max.	27.93 (1.100) 45.17 (1.778) 34.95 (1.376) 0.10 (0.004)
Transfer driven gear	I.D. Diameter of needle bearing contact area End play Thickness	34.009—34.025 (1.3389—1.3396) 54.000—54.015 (2.1260—2.1266) 0.04—0.13 (0.002—0.005) 42.92—44.97 (1.690—1.770)	34.07 (1.341) 53.94 (2.124) 0.21 (0.008) 44.8 (1.76)
Transfer drive bevel gear	I.D. Diameter of taper bearing contact area	25.000—25.021 (0.9843—0.9851) 35.002—35.018 (1.3780—1.3787)	25.06 (0.987) 34.95 (1.376)
Transfer driven bevel gear	Backlash Diameter of taper bearing contact area Inner driven gear bearing race Outer driven gear bearing race	0.10—0.15 (0.004—0.006) 35.002—35.018 (1.3780—1.3787) 27.987—28.000 (1.1018—1.1024)	Adjust 34.95 (1.376) 27.93 (1.100)

(cont'd)

Standards and Service Limits (cont'd)

Manual Transmission (Wagon 4WD) — Section 15

	MEASUREMENT	STANDARD (NEW)	SERVICE LIMIT
Blocking ring	Ring-to-gear clearance	0.85–1.1 (0.033–0.043)	0.4 (0.02)
1–2 shift fork & 3–4 shift fork	Synchronizer sleeve groove width	7.95–8.05 (0.313–0.317)	—
	Shift fork-to-synchronizer sleeve clearance Thrust	0.45–0.65 (0.018–0.026)	1.0 (0.04)
	Radial	0.05–0.35 (0.002–0.014)	0.7 (0.03)
	Forkshaft-to-shift fork clearance	0.040–0.138 (0.0016 0.0054)	—
5th shift fork	Synchronizer sleeve width	5.75–5.85 (0.226–0.230)	—
	Shift fork-to-synchronizer sleeve clearance Thrust	0.25–0.45 (0.010–0.018)	0.8 (0.03)
	Radial	0.05–0.45 (0.002–0.018)	0.8 (0.03)
	Fork shaft-to-shift fork clearance		
	5–R shift fork shaft	0.005–0.070 (0.0002–0.0028)	—
	1–2 shift fork shaft	0.040 0.270 (0.0016–0.0106)	—
Reverse shift fork	Nail width	13.0–13.3 (0.51–0.52)	—
	Shift fork-to-reverse idle gear clearance	0.5 1.1 (0.02–0.04)	1.8 (0.07)
	L-groove width	7.05–7.25 (0.278–0.285)	—
	Shift fork-to-5-R shift piece clearance	0.05–0.35 (0.002–0.014)	0.5 (0.02)
Shift arm A	Diameter of shift piece contact area	12.9–13.0 (0.508–0.512)	—
	Shift arm-to-shift piece clearance	0.2–0.5 (0.01 0.02)	0.7 (0.03)
	Shift arm-to-interlock clearance I.D.	16.000–16.068 (0.6299–0.6326)	—
	Shift arm-to-shaft clearance	0.011–0.092 (0.0004–0.0036)	—
Shift arm	Diameter of shift arm A contact area	11.9–12.0 (0.469–0.472)	—
	Shift arm-to-shift arm A clearance	0.05–0.25 (0.002–0.010)	0.5 (0.02)
Select arm	Diameter of shift arm A contact area	7.95–8.00 (0.313–0.315)	—
	Serect arm-to-shift arm A clearance	0.10–0.25 (0.004–0.010)	0.5 (0.02)
SL shift fork	Synchronizer sleeve groove width	5.75–5.85 (0.226–0.230)	—
	Shift fork-to-synchronizer sleeve clearance Thrust	0.25–0.45 (0.010–0.018)	0.8 (0.03)
	Radial	0.05 0.45 (0.002–0.018)	0.8 (0.03)
SL shift piece A	Shift piece-to-fork shaft clearance	0.040–0.138 (0.0016–0.0054)	—
	Diameter of SL shift lever contact area	10.1–10.2 (0.398–0.402)	—
	Shift piece-to-SL shift lever clearance	0.1 0.3 (0.004–0.012)	—
SL shift piece B	Diameter of SL shift lever contact area	7.9–8.0 (0.311–0.315)	—
	Shift piece-to-SL shift lever clearance	0.05–0.25 (0.002–0.010)	0.5 (0.02)
Selector fork	Sleeve groove width	8.45–8.55 (0.333–0.337)	—
	Fork-to-sleeve clearance Thrust	0.45–0.65 (0.018–0.026)	1.0 (0.04)
	Radial	0.2–1.1 (0.01–0.04)	1.5 (0.06)

Automatic Transmission — Section 16

	MEASUREMENT	STANDARD (NEW)	SERVICE LIMIT
Transmission oil	Capacity US. qt., Imp. qt.)	2.4 (2.5, 2.1) at oil change 5.4 (5.7, 4.8) at assembly	
Hydraulic pressure	Line pressure at 2,000 rpm	784–833 kPa (8.0–8.5 kg/cm², 114–126 psi)	735 kPa (7.5 kg/cm², 105 psi)
	4th, 3rd, 2nd clutch pressure at 2,000 rpm	441–833 kPa (4.5–8.5 kg/cm², 64–125 psi)	735 kPa (7.5 kg/cm², 105 psi) with throttle more than 3/8 OPEN
	1st clutch pressure at 2,000 rpm	784–833 kPa (8.0–8.5 kg/cm², 114–126 psi)	735 kPa (7.5 kg/cm², 105 psi)
	Governor pressure at 60 km/h	208–218 kPa (2.12–2.22 kg/cm², 30–31 psi)	203 kPa (2.07kg/cm², 29psi)
	Throttle pressure A	500–515 kPa (5.10–5.25 kg/cm², 73–75 psi)	495 kPa (5.05 kg/cm², 72 psi)
	Throttle pressure B	784–833 kPa (8.0–8.5 kg/cm², 114–126 psi)	735 kPa (7.5 kg/cm², 105 psi)
Stall speed	Check with car on level ground	2,300–2,900 rpm	—
Clutch	Clutch initial clearance 1st	0.4–0.6 (0.016–0.024)	—
	2nd	0.65–0.80 (0.026–0.031)	—
	3rd and 4th	0.4–0.6 (0.016–0.024)	—
	Clutch return spring free length 1st	31.0–(1.22)	29.0 (1.14)
	Except 1st	30.5 (1.20)	29.0 (1.14)
	Clutch disc thickness	1.88–2.0 (0.074–0.079)	Until grooves worn out
	Clutch plate thickness	1.55–1.45 (0.061–0.065)	Discoloration
	Clutch end plate thickness Mark 1	2.3–2.4 (0.091–0.094)	↑
	Mark 2	2.4–2.5 (0.094–0.098)	
	Mark 3	2.5–2.6 (0.098–0.102)	
	Mark 4	2.6–2.7 (0.102–0.106)	
	Mark 5	2.7–2.8 (0.106–0.110)	
	Mark 6	2.8–2.9 (0.110–0.114)	
	Mark 7	2.9–3.0 (0.114–0.118)	
	Mark 8	3.0–3.1 (0.118–0.122)	
	Mark 9	3.1–3.2 (0.122–0.126)	
	Mark 10	3.2–3.3 (0.126–0.130)	↓ Discoloration

specs

Unit: mm (in.)

Automatic Transmission (cont'd) — Section 16

	MEASUREMENT		STANDARD (NEW)	SERVICE LIMIT
Transmission	Diameter of needle bearing contact area on main and stator shaft		19.980–19.993 (0.7866–0.7871)	Wear or damage
	Diameter of needle bearing contact area on main shaft 2nd gear collar		35.957–35.991 (1.4163–1.4169)	
	Diameter of needle bearing contact area on main 4th gear collar		31.975–31.991 (1.2588–1.2594)	
	Diameter of needle bearing contact area on mainshaft 1st gear collar		30.975–30.991 (1.2195–1.2201)	
	Diameter of needle bearing contact area on countershaft (L side)		36.004–36.017 (1.4175–1.4180)	
	Diameter of needle bearing contact area on countershaft 3rd gear		31.975–31.991 (1.2589–1.2595)	
	Diameter of needle bearing contact area on countershaft 4th gear		27.980–27.993 (1.1016–1.1021)	
	Diameter of needle bearing contact area on countershaft reverse gear collar		29.980–29.993 (1.1803–1.1808)	
	Diameter of needle bearing contact area on countershaft L gear collar		29.980–29.993 (1.1803–1.1808)	
	Diameter of needle bearing contact area on reverse idle gear		13.990–14.000 (0.5508–0.5512)	
	Mainshaft 2nd gear I.D.		41.000–41.016 (1.6141–1.6148)	
	Mainshaft 1st gear I.D.		36.000–36.016 (1.4173–1.4179)	
	Countershaft 3rd gear I.D.		38.000–38.016 (1.4966–1.4966)	
	Countershaft 4th gear I.D.		33.000–33.016 (1.4173–1.4179)	
	Countershaft reverse gear I.D.		36.000–36.016 (1.4173–1.4179)	
	Reverse idle gear I.D.		18.007–18.020 (0.7086–0.7094)	Wear or damage
	Mainshaft 4th gear end play		0.10–0.22 (0.004–0.009)	—
	Mainshaft 2nd gear end play		0.07–0.15 (0.003–0.006)	—
	Mainshaft 1st gear end play		0.08–0.24 (0.0031–0.0094)	—
	Countershaft 3rd gear end play		0.08–0.40 (0.003–0.016)	—
	Countershaft 2nd gear end play		0.05–0.18 (0.002–0.007)	—
	Reverse idle gear and play		0.05–0.18 (0.0020–0.0071)	—
	Countershaft reverse gear end play		0.05–0.20 (0.002–0.008)	—
	Reverse gear hub O.D.		51.87–51.90 (2.0421–2.0433)	Wear or damage
	Thrust washer thickness Mainshaft 2nd gear	A	3.47–3.50 (0.137–0.138)	—
		B	3.52–3.55 (0.139–0.140)	—
		C	3.57–3.60 (0.141–0.142)	—
		D	3.62–3.65 (0.143–0.144)	—
		E	3.67–3.70 (0.145–0.146)	—
		F	3.72–3.75 (0.147–0.148)	—
		G	3.77–3.80 (0.149–0.150)	—
		H	3.82–3.85 (0.151–0.152)	—
		I	3.87–3.90 (0.151–0.152)	—
	Thrust washer thickness Countershaft 3rd gear	A	2.97–3.00 (0.1169–0.1181)	—
		B	3.02–3.05 (0.1189–0.1201)	—
		C	3.07–3.10 (0.1209–0.1220)	—
		D	3.12–3.15 (0.1228–0.1240)	—
		E	3.17–3.20 (0.1248–0.1260)	—
		F	3.22–3.25 (0.1268–0.1280)	—
		G	3.27–3.30 (0.1287–0.1299)	—
		H	3.32–3.35 (0.1307–0.1319)	—
		I	3.37–3.40 (0.1327–0.1339)	—
	Countershaft 4th gear thickness	A	33.97–34.00 (1.337–1.339)	—
		B	34.02–34.05 (1.339–1.341)	—
		C	34.07–34.10 (1.341–1.343)	—
		D	34.12–34.15 (1.343–1.344)	—
		E	34.17–34.20 (1.345–1.346)	—
		F	34.72–34.25 (1.347–1.348)	—
		G	34.27–34.30 (1.349–1.350)	—
	Mainshaft R side bearing		3.95–4.05 (0.1555–0.1594)	Wear or damage
	Mainshaft 1st gear		2.43–2.50 (0.0957–0.0984)	Wear or damage
	Thrust washer thickness (mainshaft 1st gear L side)		1.45–1.50 (0.057–0.059)	1.4 (0.055)
	Mainshaft 1st gear collar length		25.0–25.15 (0.984–0.990)	—
	Mainshaft 1st gear collar flange thickness		2.5–2.6 (0.098–0.102)	Wear or damage
	Countershaft reverse gear collar length		14.50–14.55 (0.531–0.535)	—
	Countershaft reverse gear collar flange thickness		2.45–2.55 (0.096–0.100)	Wear or damage
	Countershaft 1st gear collar length		13.5–13.6 (0.0020–0.0035)	—
	Countershaft 1st gear collar flange thickness		2.4–2.6 (0.095–0.102)	Wear or damage
	Diameter of countershaft one-way clutch contact area		74.414–74.440 (2.9297–2.9307)	Wear or damage
	Diameter of parking gear one-way clutch contact area		57.755–57.768 (2.2738–2.2743)	Wear or damage
	Mainshaft feed pipe: A O.D. (at 15 mm from end)		8.970–8.980 (0.353–0.354)	8.95 (0.352)
	Mainshaft feed pipe B: O.D. (at 12 mm from end)		5.97–5.98 (0.2350–0.2354)	5.95 (0.234)
	Countershaft feed pipe O.D. (at 20 mm from end)		5.97–5.98 (0.2350–0.2354)	5.95 (0.234)
	Mainshaft sealing ring 32 mm thickness		1.980–1.995 (0.0780–0.0785)	—
	Mainshaft bushing I.D.		6.018–6.030 (0.2369–0.2374)	6.045 (0.238)
	Mainshaft bushing I.D.		9.000–9.015 (0.3543–0.3549)	9.03 (0.356)
	Countershaft bushing I.D.		8.000–8.015 (0.3150–0.3156)	8.03 (0.316)
	Mainshaft sealing ring groove width		2.025–2.060 (0.0797–0.0811)	2.08 (0.082)
Regulator valve body	Sealing ring contact area diameter		32.000–32.025 (1.2598–1.2608)	32.05 (1.26)

(cont'd)

Standards and Service Limits (cont'd)

Automatic Transmission (cont'd) — Section 16

	MEASUREMENT	STANDARD (NEW)	SERVICE LIMIT
Shifting device and parking brake control	Reverse shift fork thickness	5.9–6.0 (0.232–0.236)	5.4 (0.21)
	Parking brake ratchet pawl	—	Wear or other defect
	Parking gear	—	Wear or other defect
	Throttle cam stopper	18.5–18.6 (0.7283–0.7323)	—
Servo body	Shift fork shaft bore I.D. A	14.000–14.005 (0.5512–0.5514)	—
	B	14.006–14.010 (0.5514–0.5516)	—
	C	14.011–14.015 (0.5516–0.5518)	—
	Shift fork shaft valve bore I.D.	37.000–37.039 (1.4567–1.4582)	37.045 (1.4585)
Valve body	Oil pump gear side clearance	0.03–0.05 (0.0012–0.0020)	0.07 (0.003)
	Oil pump gear-to-body clearance	Drive: 0.105–0.133 (0.0041–0.0052)	—
		Driven: 0.050–0.088 (0.0020–0.0035)	—
	Stator camshaft needle bearing bore I.D. (R. side)	26.000–26.013 (1.0236–1.0241)	Wear or damage
	Stator camshaft needle bearing contact and I.D. (Stator side)	24.000–24.021 (0.9449–0.9457)	Wear or damage
	Oil pump driven gear I.D.	14.016–14.034 (0.5518–0.5525)	Wear or damage
	Oil pump shaft O.D.	13.980–13.990 (0.5504–0.5508)	Wear or damage

Springs	Wire Dia.	O.D.	No. of Coils	Free Length
Regulator valve outer spring	1.8 (0.07)	14.7 (0.58)	17	86.5 (3.41)
Regulator valve inner spring	1.8 (0.07)	6.40 (0.24)	7.5	44.0 (1.73)
Stator reaction spring	6.0 (0.24)	38.4 (1.51)	2	30.3 (1.19)
Torque converter check valve spring	1.1 (0.04)	8.4 (0.33)	12	36.4 (1.43)
Relief valve spring	0.8 (0.03)	8.4 (0.33)	15	47.7 (1.88)
2nd orifice control valve spring	0.8 (0.03)	6.6 (0.26)	27.6	46.3 (1.82)
Servo orifice control valve spring	0.8 (0.03)	6.1 (0.24)	20.7	39.4 (1.55)
Throttle control valve A spring	1.0 (0.04)	8.5 (0.33)	6	21.0 (0.83)
Throttle control valve A adjuster spring	0.8 (0.03)	6.2 (0.24)	8.5	27.0 (1.06)
Throttle control valve B spring	1.4 (0.06)	8.5 (0.33)	8.4	41.4 (1.63)
Throttle control valve B adjuster spring	0.8 (0.03)	8.2 (0.32)	8	30.0 (1.18)
1–2 shift spring	0.5 (0.02)	4.4 (0.17)	38	47.2 (1.86)
1–2 shift ball spring	0.45 (0.02)	4.5 (0.18)	11	12.7 (0.50)
2–3 shift spring	0.9 (0.04)	7.6 (0.30)	27	63.0 (2.48)
2–3 shift ball spring	0.5 (0.02)	4.5 (0.18)	10	12.3 (0.48)
3–4 shift spring	0.9 (0.04)	9.6 (0.38)	10	32.2 (1.27)
3–4 shift ball spring	0.5 (0.02)	4.5 (0.18)	7	11.3 (0.44)
Low accumulator A spring	2.74 x 2.96 (0.11 x 0.12)	26.8 (1.06)	4.3	38.8 (1.53)
Low accumulator B spring	2.6 (0.10)	12.0 (0.47)	3.2	24.6 (0.97)
4th accumulator spring	2.9 (0.11)	18.6 (0.73)	17	100.4 (3.95)
2nd accumulator spring	3.5 (0.14)	20.2 (0.80)	11	76.8 (3.02)
3rd accumulator spring	20 x 3.3 (0.79 x 0.13)	15.5 (0.61)	20	81.4 (3.20)
L/C control spring	1.4 (0.06)	8.6 (0.34)	28	58.3 (2.26)
L/C timing valve A spring	1.2 (0.04)	8.6 (0.34)	20	51.6 (2.03)
L/C timing valve B spring	1.1 (0.04)	7.6 (0.30)	29.4	61.2 (2.41)
CPC valve spring	1.4 (0.06)	9.4 (0.32)	10.9	31.6 (1.24)
Servo return spring	2.6 (0.10)	23.6 (0.93)	3.3	40.3 (1.59)
Governor spring A	1.0 (0.04)	18.8 (0.74)	4	38.1 (1.50)
Governor spring B	0.9 (0.04)	11.8 (0.46)	6	27.8 (1.09)
L/C shift valve spring	1.1 (0.04)	8.1 (0.32)	22.3	51.8 (2.04)
L/C cut valve spring	0.7 (0.03)	7.6 (0.30)	18	29.0 (1.14)
Kick down valve spring	1.0 (0.04)	6.6 (0.26)	33.4	58.5 (2.3)
REV control spring	0.8 (0.03)	7.6 (0.30)	17.2	36.1 (1.4)
Accumulator control spring	1.2 (0.05)	7.7 (0.30)	21.8	45.6 (1.80)
Timing accumulator spring	1.1 (0.04)	11.7 (0.46)	6.6	28.2 (1.11)

Differential (Except Wagon 4WD) — Section 17

	MEASUREMENT	STANDARD (NEW)	SERVICE LIMIT
Ring gear	Backlash	0.073–0.132 (0.0029–0.0052)	0.25 (0.010)
Differential carrier	Pinion shaft bore diameter	18.000–18.018 (0.7087–0.7094)	18.1 (0.71)
	Carrier-to-pinion shaft clearance	0.016–0.052 (0.0006–0.0020)	0.1 (0.004)
	Driveshaft bore diameter Manual.	26.005–26.025 (1.0238–1.0246)	—
	Automatic	28.000–28.021 (1.1024–1.1032)	—
	Carrier-to-driveshaft clearance	0.025–0.066 (0.0010–0.0026)	0.12 (0.005)
	Side clearance	0.10–0.20 (0.004–0.008)	0.15 (0.006)
Differential pinion gear	Backlash	0.05–0.15 (0.002–0.006)	0.2 (0.008)
	Pinion gear bore diameter	18.041–18.061 (0.7103–0.7111)	—
	Pinion gear-to-pinion shaft clearance	0.057–0.095 (0.0022–0.0037)	0.15 (0.006)

3-8

specs

Unit: mm (in.)

Front Differential (Wagon 4WD) — Section 17

	MEASUREMENT	STANDARD (NEW)	SERVICE LIMIT
Ring gear	Backlash	0.075–0.136 (0.0030–0.0054)	—
Differential carrier	Pinion shaft bore diameter	18.000–18.018 (0.7087–0.7094)	—
	Carrier-to-pinion shaft clearance	0.016–0.052 (0.0006–0.0020)	0.1 (0.004)
	Driveshaft bore diameter	28.000–28.021 (1.1024–1.1032)	—
	Carrier-to-driveshaft clearance	0.025–0.066 (0.0010–0.0026)	0.12 (0.005)
	Ball bearing bore diameter	40.002–40.018 (1.5749–1.5755)	—
Differential pinion gear	Backlash	0.05–0.15 (0.002–0.006)	Adjust
	Pinion gear bore diameter	18.041–18.061 (0.7103–0.7111)	—
	Pinion gear-to-pinion shaft clearance	0.057–0.095 (0.0022–0.0037)	0.15 (0.006)

Rear Differential (Wagon 4WD) — Section 17

	MEASUREMENT	STANDARD (NEW)	SERVICE LIMIT
Diff. carrier assy.	Oil capacity — Replace	(1.1 US. qt., 0.9 Imp. qt.)	—
	Disassemble	(1.3 US. qt., 1.1 Imp. qt.)	—
Diff. carrier	Diameter of taper bearing contact area		
	Front drive pinion bearing	57.979–58.009 (2.2826–2.2838)	58.06 (2.286)
	Rear drive pinion bearing	71.979–72.009 (2.8338–2.8350)	72.06 (2.837)
	Side bearing	68.000–68.030 (2.6772–2.6783)	68.08 (2.680)
Diff. case	Diameter of diff. pinion shaft contact area	18.000–18.018 (0.7087–0.7094)	—
	Case-to-diff. pinion shaft	0.016–0.052 (0.0006–0.0020)	0.1 (0.004)
	Diameter of drive shaft contact area	26.005–26.025 (1.0236–1.0246)	—
	Case-to-drive shaft clearance	0.025–0.066 (0.0010–0.0026)	0.12 (0.005)
	Diameter of taper bearing contact area	40.002–40.018 (1.5749–1.5755)	39.95 (1.573)
Diff. pinion gear	Backlash	0.05–0.15 (0.002–0.006)	Adjust
	I.D.	18.041–18.061 (0.7103–0.7111)	—
	Gear-to-pinion shaft clearance	0.057–0.095 (0.0022–0.0037)	0.15 (0.006)
Hypoid drive pinion gear	Backlash	0.11–0.15 (0.004–0.006)	Adjust
	Diameter of taper bearing contact area		
	Front pinion bearing	27.987–28.000 (1.1018–1.1024)	27.93 (1.100)
	Rear pinion bearing	30.002–30.018 (1.1812–1.1818)	29.95 (1.179)

Driveshaft — Section 18

	MEASUREMENT	STANDARD (NEW)	SERVICE LIMIT
Driveshaft (Except Wagon 4WD)	Right boot — As installed	471–476 (18.5–18.7)	—
	Left boot — As installed	771–776 (30.4–30.6)	—
Driveshaft (Wagon 4WD)	Right boot — As installed	462–472 (18.2–18.6)	—
	Left boot — As installed	462–472 (18.2–18.6)	—

Steering — Section 19

	MEASUREMENT	STANDARD (NEW)	SERVICE LIMIT
Steering wheel	Play	10.0 (0.39) Max.	—
	Pinion-starting torque N·m (kg-m, lb-ft) — Without P/S	0.5–1.3 (0.05–0.13, 0.36–0.94)	—
	With P/S	1.2 (0.12, 0.87) Max.	—
	Pump pressure with valve closed (Oil temp./speed: 40°C (104°F) min/idle. Do not run for more than 5 seconds) kPa (kg/cm², psi)	6,370–7,056 (65–72, 924–1,014)	
	Fluid capacity — Reservoir	(0.32 US. qt., 0.26 Imp. qt.)	
	At change	(1.1 US. qt., 0.9 Imp. qt.)	
Power Steering Pump belt	Deflection midway between pulleys load	18–22 (0.7–0.9)/98N (10kg, 22lb) for used belt 18–20 (0.7–0.8)/98N (10kg, 22lb) after replacement of belt	

(cont'd)

Standards and Service Limits (cont'd)

Suspension — Section 20

	MEASUREMENT			STANDARD (NEW)		SERVICE LIMIT
Wheel alignment				Front	Rear	
	Camber			0°±1° [0°40'±1°]	−3/4±1/4° [0°±1°]	
	Caster		Wagon	2°±1° [1°55'±1°]	—	
			Others Without P/S	2-1/2° ± 1°	—	
			Others With P/S	3° ± 1°	—	
	Toe			0±3 (0±0.118)	in 2±2 (0.08 ± 0.08) [0±2(0 ±0.08)]	
	Kingpin inclination		Hatchback	13° ± 1/2°		
			Sedan	13° ± 1/2°		
			Wagon	12° ± 1/2°		
			Wagon 4WD	11°25' ± 1/2°		
	Steering angle	R/L	Inside	41-1/2°±2° [40°30'±2°]		
			Outside	34-1/2°±2° [33°00'±2°]		
Wheel	Rim runout	Steel	Axial	0 — 1.0 (0—0.039)		—
			Radial	0—1.0 (0—0.039)		
		Aluminum	Axial	0—0.7 (0—0.028)		—
			Radial	0 - 0.7 (0—0.028)		—
[Front spring]	[Clearance between wheel arch and ground]			673—683 (26.5—26.9)		

[ ] Wagon 4WD

Brake — Section 21

	MEASUREMENT		STANDARD (NEW)	SERVICE LIMIT
Parking brake lever	Play in stroke 200N (20 kg, 44 lbs)		To be locked when pulled 4—8 notches	
Foot brake pedal	Pedal height		174 (6.8) Wagon: 168 (6.6) to floor	
	Free play		1 5 (0.04—0.20)	5 (0.20)
Master cylinder	Piston-to-push rod clearance		0 0.4 (0—0.016)	—
Brake drum	I.D.		180 (7.09)	181 (7.13)
		Wagon	200 (7.87)	201 (7.91)
Lining	Thickness		4.5 (0.18)	2.0 (0.08)
Disc brake	Disc thickness	1500	17.0 (0.67)	15.0 (0.59)
		1300 Hatchback	12.0 (0.47)	10.0 (0.39)
	Disc runout		—	0.10 (0.004)
	Disc parallelism		0.007 (0.0003)	0.015 (0.0006)
	Pad thickness		10.0 (0.39)	3.0 (0.12)

		Vacuum (mmHg)	Pedal Pressure kg (lbs)	Line Pressure kg/cm² (psi)
Brake Booster	Characteristic	0	20 (44)	16 (227) min
		300	20 (44)	46 (654) min
		500	20 (44)	66 (939) min

specs

Engine Electrical — Section 25

Unit: mm (in.)

	MEASUREMENT	STANDARD (NEW)
Ignition coil	Rated voltage Primary resistance	12 Volts 1.2—1.5 ohms
	Secondary Winding resistance	11.074—11.526 ohms

Voltage	Camshaft	Secondary Voltage	3-point gap	Condition
12V	3,000 rpm	17 ± 4 kV	13—19 (0.51—0.75)	At 80°C (176°F)

Ignition wire	Resistance	25,000 ohms max.
Spark plug	Type Standard — Carbureted Engine Fuel-Injected Engine	NGK: BUR4EB-11, ND: W14EKR-S11 NGK: BPR6EY-11, ND: W20EXR-U11
	Gap	1.0—1.1 (0.039—0.043)

Ignition timing	At idling	1300		14° ± 2° BTDC at idle in neutral
		1500 Carbureted Engine	Manual	20° [15°] ± 2° BTDC at idle in neutral
			Automatic	15° ± 2° BTDC at idle in gear
	[ ] Wagon 4WD	1500 Fuel-Injected Engine	49ST and HIALT	16° ±2° BTDC at idle in neutral
			CAL	12° ±2° BTDC at idle in neutral

Battery	Lighting capacity (20-hour ratio) Starting capacity (5-second ratio)	47 Ampere Hours 8.4V minimum at 300 Ampere draw	
Alternator		ND	
		STANDARD (NEW)	SERVICE LIMIT
	Output at no-load Output	14V at 1,090 rpm 14V/55A at 6,000 rpm	14V at 1,400 rpm 50A at 5,000 rpm
	Coil resistance (rotor) Slip ring O.D. Brush length Brush spring tension	2.9 ohm 14.4 (0.57) 10.5 (0.41) 330g (11.6 oz)	2.8—3.0 ohms 13.5 (0.53) 5.5 (0.22) 200g (7.05 oz)
Alternator belt	Deflection midway between pulleys/load	7—10 (0.28—0.39)/98 N (10 kg, 22 lb) for used belt 4—6.5 (0.16—0.26)/98 N (10 kg, 22 lb) after replacement of belt	

Starting motor	ND 0.8kW		* HITACHI 0.8kW		ND 1.0kW, 1.4kW		MITSUBA 1.0kW, 1.4kW	
MEASUREMENT	STANDARD (NEW)	SERVICE LIMIT	STANDARD (NEW)	SERVICE LIMIT	STANDARD (NEW)	SERVICE LIMIT	STANDARD (NEW)	SERVICE LIMIT
Mica depth	0.5—0.8 (0.020—0.031)	0.2 (0.008)	0.5—0.8 (0.020—0.031)	0.2 (0.008)	0.5—0.8 (0.020—0.031)	0.2 (0.008)	0.4—0.5 (0.016—0.020)	0.15 (0.006)
Commutator runout	0—0.5 (0.020)	0.3 (0.012)	0—0.1 (0.004)	0.4 (0.016)	0—0.02 (0.0008)	0.05 (0.020)	0—0.02 (0.008)	0.05 (0.020)
Commutator O.D.	28.0 (1.10)	27.0 (1.06)	—	39.0 (1.54)	30.0 (1.18)	29.0 (1.14)	28.0 (1.10)	27.5 (1.08)
Brush length	15.5—16.5 (0.61—0.65)	10.0 (0.39)	14.5—15.5 (0.57—0.61)	11.0 (0.43)	12.5—13.5 (0.49—0.53)	8.5 (0.33)	14.3—14.7 (0.56—0.58)	9.3 (0.37)
Spring pressure (new)	1.2 kg (2.6 lb)	—	1.6 kg (3.5 lb)	—	1.75 kg (3.8 lb)	—	2.1 kg (4.6 lb)	—

Design Specifications

Sedan

	ITEMS		METRIC	ENGLISH	NOTES
DIMENSIONS	Overall Length		4,145 mm	163.2 in.	
	Overall Width		1,625 mm	63.9 in.	
	Overall Height		1,385 mm	54.5 in.	
	Wheelbase		2,450 mm	96.5 in.	
	Track F/R		1,400/1,415 mm	55.1/55.7 in.	
	Ground Clearance		160 mm	6.3 in.	
	Seating Capacity		Five		
WEIGHTS	Curb Weight	5-MT	936 kg	2,064 lb.	5MT: 5 speed manual transmission 4AT: 4 speed automatic transmission Curb weight: +A/C – 22 kg (49 lb.) +Cargo: 45 kg (99 lb.) +Passengers – 68 kg x 5 (150 lb. x 5) +Tolerance = G.V.W.R.
		4-AT	973 kg	2,145 lb.	
	Gross Vehicle Weight Rating	5-MT	1,339 kg	2,950 lb.	
		4-AT	1,391 kg	3,065 lb.	
	Carrying (Cargo) Weight Capacity		45 kg	79 lb.	
ENGINE	Type		Water cooled, 4-cycle O.H.C.		
	Cylinder Arrangement		4-cylinder in-line, transverse		
	Bore and Stroke		74.0 x 86.5 mm	2.91 x 3.41 in.	
	Displacement		1,488 cm³	91 cu. in.	
	Compression Ratio		9.2 : 1		
	Carburetor Venturi Diameter (Primary/Secondary/Auxiliary)		22/29/8.5 mm	0.87/1.14/0.33 in.	
	Valve Train		Timing belt driven, single overhead camshaft		
	Lubrication System		Trochoid pump		
	Fuel Required		Unleaded grade gasoline with 91 research octane number or higher.		
STARTER	Type		Direct drive	Gear reduction	
	Normal output		0.8kW,	1.0kW, 1.4kW	
	Nominal voltage		12 V		
	Hour rating		30 seconds		
	Direction of rotation		Clockwise as viewed from gear end		
	Weight		4.4 kg (9.7 lb)	ND: 3.85 kg (3.5 lb) MITSUBA 3.4 kg (7.5 lb)	ND: 4.6 kg (10.1 lb) MITSUBA 3.7 kg (8.2 lb)
TRANSMISSION	Clutch	4-AT, 5-MT	Torque Converter		
			Single plate dry, diaphragm spring		
	Transmission	4-AT	4 forward speeds 1 reverse with torque converter		
		5-MT	Synchronized 5 forward 1 reverse		
	Primary Reduction		Direct 1 : 1		
	Gear Ratio		5-MT	4-AT	
		1st	2.916	2.500	
		2nd	1.764	1.560	
		3rd	1.192	1.031	
		4th	0.866	0.777	
		5th	0.718	–	
		Reverse	2.916	1.954	
	Final Reduction	4-AT	Single helical gear, 3.933		
		5-MT	Single helical gear, 4.250		
	Clutch Lining Area		146 cm²	22.6 sq. in.	
AIR CONDITIONER	Cooling capacity		3,500 Kcal	(15,672 Btu/h)	
	– Conditions:				
	Compressor rpm		1,800 rpm/2,600 rpm (SANDEN)		
	Outside air temperature		27.5°C	(81.5°F)	
	Outside air humidity		50%		
	Condenser air temperature		35°C	(95°F)	
	Condenser air velocity		4.5 m/sec.		
	Blower capacity		340 m³/h	(12,006 cu.ft/h)	
	Compressor (KEIHIN)	Type	Radial type		
		No of cylinders	4		
		Piston Displacement	150 cc/rev.	(9.15 cu. in/rev.)	
		Max. rpm	7,000 rpm		
		Lubricant/capacity	70 – 90 cc	(2.4 – 3.0 US oz.)	
	Compressor (SANDEN)	Type	Positive Displacement Spiral		
		Displacement	68.9 cc/rev	4.20 cu. in/rev.	
		Max. allowable Continous Speed	10,000 rpm		
		Max. Dawnshift Speed	12,000 rpm		
		Oil Charge	120 – 140 cc	4.1 – 4.7 US. oz.	
	Condenser		Corrugated fin type		

3-12

specs

	ITEMS		METRIC	ENGLISH	NOTES
AIR CONDITIONER	Evaporator		Corrugated fin type		
	Blower	Type	Sirocco fan		
		Motor input	145 W (12 V)		
		Speed control	4 Position		
		Max. capacity	270 m³/h	(9.537 cu.ft/h)	
	Temp. Control		Air-mix type		
	Comp. Clutch	Type	Dry, single plate, V-belt-1A		
		Power consumption	48 W max. (12 V)		
	Refrigerant	Type	R-12		
		Quantity	0.8 ± 0.05 kg	(1.76 ± 0.11 lbs)	
STEERING	Gear Type		Rack and Pinion		
	Overall Ratio		19.1—21.6 (17.9) : 1		( ) with P/S
	Turns, lock-to-lock		4.25 (3.69)		( ) with P/S
	Steering Wheel Diameter		377 mm	14.8 in.	
	Power Steering Oil capacity		1.5 lit.	1.6 US. qt., 1.3 Imp. qt.	
	Power Steering Oil		HONDA Genuine Power Steering Fluid		
SUSPENSION	Front		Independent: Strut with torsion-bar spring		
	Rear		Trailing arm		
WHEEL ALIGNMENT	Camber	Front/Rear	0° ± 1°/ – 3/4 ± 1/4°		
	Caster		2-1/2° ± 1° (3° ± 1°)		( ) with P/S
	Toe	Front	0 ± 3 mm	0 ± 0.118 in.	
		Rear	in 2 ± 2 mm	in 0.079 ± 0.079 in.	
	Steering Axis Inclination		13° ± 1/2°		
BRAKES	Type, Front		Self-adjusting power assisted ventilated disc brake type		
	Type, Rear		Power assisted leading-trailing shoe drum type		
	Lining Surface Area Front/Rear		36/50.2 cm²	5.6/7.8 sq. in.	
	Effective Disc Diameter		190 mm	7.5 in.	
	Brake Drum I.D.		180 mm	7.1 in.	
	Parking Brake Type		Mechanical expanding, rear two wheel brakes		
TIRES	Size		P175/70R13		
ELECTRICAL	Battery		12V—47AH		
	Starter		HM 12V—1.4KW, MT 12V—1.0KW		CAL Only 12V—0.8 KW
	Alternator		12V—55 amps		
	Fuses		20A, 15A, 10A		
	Main Fuse		55A, 45A		
	Headlights		12V—65/45 W		(C-6)
	Speedometer/Gauge Lights		12V—3.4W, 12V—1.4W		
	Front Turn Signal Lights		12V—32CP		(SAE 1156)
	Side Marker Lights (front and rear)		12V—5W/3CP		(SAE 68)
	Warning Indicator Lights		12V—1.4W		
	Dome Light		12V—5W		
	Rear Turn Signal Lights		12V—32CP		(SAE 1156)
	Stop/Taillights		12V—32/2CP		(SAE 2057)
	Turn Signal Indicator Lights		12V—1.4W		
	Luggage Area Lights		12V—3.4W		
	Back-up Lights		12V—32CP		(SAE 1156)
	License Lights		12V—4CP		(SAE 67)
	High Mount Stop Light		12V—21CP		
	Heater Panel Lights		12V—1.4W		

(cont'd)

Design Specifications (cont'd)

Hatchback

	ITEMS		METRIC	ENGLISH	NOTES
DIMENSIONS	Overall Length		3,845 mm	151.4 in.	
	Overall Width		1,625 mm	63.9 in.	
	Overall Height		1,335 mm	52.6 in.	
	Wheelbase		2,380 mm	93.7 in.	
	Track F/R		1,400/1,415 mm	55.1/55.7 in.	
	Ground Clearance		160 mm	6.3 in.	
	Seating Capacity		Five		
WEIGHTS	Curb Weight	1500 4-AT	918 kg	2,225 lb.	4-AT: 4 speed automatic
		1500 5-MT DX	899 kg	1,981 lb.	5-MT: 5 speed manual transmission
		5-MT Si	927 kg	2,044 lb.	4-MT: 4 speed manual transmission
		1300 4-MT	860 kg	1,895 lb.	Curb weight + A/C 22 kg (49 lb.) + Cargo—45 kg (99 lb.) + Passengers 68 kg x 5 (150 lb. x 5) + Tolerance = G.V.W.R.
	Gross Vehicle Weight Rating (MVSS)	1500	1,329 kg	2,930 lb.	
		1300	1,224 kg	2,830 lb.	
	Carrying (cargo) Weight Capacity		45 kg	99 lb.	
ENGINE	Type		Water cooled, 4-cycle O.H.C.		
	Cylinder Arrangement		4-cylinder in-line, transverse		
	Bore and Stroke	1500	74.0 x 86.5 mm	2.91 x 3.41 in.	
		1300	74.0 x 78.0 mm	2.91 x 3.07 in.	
	Displacement	1500	1,488 cm³	91 cu. in.	
		1300	1,342 cm³	82 cu. in.	
	Compression Ratio	1500	9.2 : 1, Si 8.7 : 1		
		1300	10.0 : 1		
	Carburetor Venturi Diameter (Primary/Secondary/Auxiliary)		22/29/8.5 mm	0.87/1.14/0.33 in.	
	Valve Train		Timing belt driven, single overhead camshaft		
	Lubrication System		Trochoid pump		
	Fuel Required		Unleaded grade gasoline with 91 research octane number or higher.		
STARTER	Type		Direct drive	Gear reduction	
	Normal output		0.8 kW	0.8 kW | 1.0 kW | 1.4 kW	
	Nominal voltage		12 V		
	Hour rating		30 seconds		
	Direction of rotation		Clockwise as viewed from gear end		
	Weight		4.4 kg (9.7 lb)	ND: 3.85 kg (8.5 lb) MITSUBA: 3.4 kg (7.5 lbs) | ND: 4.6 kg (10.1 lbs) MITSUBA: 3.7 kg (8.1 lbs)	
TRANSMISSION	Clutch	4-AT	Torque Convertor		
		5-MT, 4-MT	Single plate dry, diaphragm spring		
	Transmission	4-AT	4 forward speeds 1 reverse with torque converter		
		4-MT	Synchronized 4 forward 1 reverse		
		5-MT	Synchronized 5 forward 1 reverse		
	Primary Reduction		Direct 1 : 1		
	Gear Ratio		4-MT / 5-MT	4-AT	
		1st	3.272 / 2.916	2.500	
		2nd	1.666 / 1.764	1.560	
		3rd	1.041 / 1.192	1.031	
		4th	0.777 (0.750) / 0.866	0.777	( ) KA
		5th	— / 0.718	—	
		Reverse	2.916 / 2.916	1.954	
	Final Reduction	4-AT	Single helical gear, 3.933		
		4-MT	Single helical gear, 4.9 St 3.578, CAL 3.722, HIAlt 4.266		
		5-MT	Single helical gear, DX 4.250, Si 4.400		
	Clutch Lining Area		146 cm²	22.6 sq. in.	
AIR CONDITIONER	Cooling capacity		3,500 K cal	(15,672 Btu/h)	
	— Conditions:				
	Compressor rpm		1,800 rpm/2,600 rpm (SANDEN)		
	Outside air temperature		27.5°C	(81.5°F)	
	Outside air humidity		50%		
	Condenser air temperature		35°C	(95°F)	
	Condenser air velocity		4.5 m/sec.		
	Blower capacity		400 m³/h	(14,126 cu.ft/h)	
	Compressor (KEIHIN)	Type	Radial type		
		No. of cylinders	4		
		Piston Displacement	150 cc/rev.	(9.15 cu. in/rev.)	
		Max. rpm	7,000 rpm		
		Lubricant/capacity	70—90 cc	(2.4—3.0 US.oz.)	
	Compressor (SANDEN)	Type	Positive Displacement Spiral		
		Displacement	68.9 cc/rev	4.20 cu. in/rev.	
		Max. allowable Continuous Speed	10,000 rpm		
		Max. Downshift Speed	12,000 rpm		
		Oil Charge	120—140 cc	4.1—4.7 US.oz.	
	Condenser		Corrugated fin type		

specs

	ITEMS			METRIC	ENGLISH	NOTES
AIR CONDITIONER	Evaporator			Corrugated fin type		
	Blower	Type		Sirocco fan		
		Motor input		145 W (12 V)		
		Speed control		4 Position		
		Max. capacity		270 m³/h	(9.537 cu.ft/h)	
	Temp. Control			Air-mix type		
	Comp. Clutch	Type		Dry, single plate, V-belt-1A		
		Power consumption		48 W max. (12 V)		
	Refrigerant	Type		R-12		
		Quantity		0.8 ± 0.05 kg	(1.76 ± 0.11 lbs)	
STEERING	Gear Type			Rack and Pinion		
	Overall Ratio		1500	19.1 : 1		
			1300	17.4 : 1		
	Turns, lock-to-lock		1500	3.89		
			1300	3.55		
	Steering Wheel Diameter			377 mm	14.8 in.	
			Si	370 x 360 mm	14.6 x 14.2 in.	
SUSPENSION	Front			Independent: Strut with torsion-bar spring		
	Rear			Trailing arm		
WHEEL ALIGNMENT	Camber	Front/Rear		0° ± 1°/−3/4° ± 1/4°		
	Caster			2-1/2° + 1°		
	Toe	Front		0 ± 3 mm	0 ± 0.118 in.	
		Rear		in 2 ± 2 mm	in 0.079 + 0.079 in.	
	Steering Axis Inclination			13° ± 1/2°		
BRAKES	Type, Front		1500	Self-adjusting power assisted ventilated disc brake type		
			1300	Self-adjusting power assisted solid disc brake type		
	Type, Rear			Power assisted leading-trailing shoe drum type		
	Lining Surface Area Front/Rear			36/50.2 cm²	5.6/7.8 sq. in.	
	Effective Disc Diameter			190 mm	7.5 in.	
	Brake Drum I.D.			180 mm	7.1 in.	
	Parking Brake Type			Mechanical expanding, rear two wheel brakes		
TIRES	Size		1300	P165/70R13		
			1500 DX	P175/70R13		
			1500 Si	175/70R13 82T		
ELECTRICAL	Battery			12V−47AH		
	Starter			HM 12V−1.4kW MT 12V−1.0kW		CAL Only 12V−0.8kW
	Alternator			12V−55 amps		
	Fuses			20A , 15A , 10A		
	Main Fuses			55A , 45A		
	Headlights			12V−65/45W		(C-6)
	Speedometer/Gauge Lights			12V−3.4W, 12V−1.4W		
	Front Turn Signal Lights			12V−32CP		(SAE 1156)
	Side Marker Lights (front and rear)			12V−5W/3CP		(SAE 168)
	Warning Indicator Lights			12V 1.4W		
	Dome Light			12V−5W		
	Rear Turn signal Lights			12V−32CP		(SAE 1156)
	Stop/Taillights			12V 32/2CP		(SAE 2057)
	Turn Signal Indicator Lights			12V−1.4W		
	Luggage Area Lights			12V−3.4W		
	Back-up Lights			12V−32CP		(SAE 1156)
	License Lights			12V 4CP		(SAE 67)
	High Mount Stop Light			12V−21CP		
	Heater Panel Lights			12V−1.4W		

(cont'd)

3-15

Design Specifications (cont'd)

Wagon

	ITEMS	METRIC	ENGLISH	NOTES
DIMENSIONS	Overall Length	4,030 mm	158.7 in.	
	Overall Width	1,625 mm	63.9 in.	
	Overall Height	1,480 mm	58.3 in.	
	Wheelbase	2,450 mm	96.5 in.	
	Track F/R	1,400/1,415 mm	55.1/55.7 in.	
	Ground Clearance	165 mm	6.4 in.	
	Seating Capacity	Five		
WEIGHTS	Curb Weight 4-AT	966 kg	2,130 lb.	4-AT: 4 speed automatic 5-MT: 5 speed manual transmission Curb weight +A/C – 22 kg (49 lb.) +Cargo – 45 kg (99 lb.) +Passengers – 68 kg x 5 (150 lb. x 5) +Tolerance = G.V.W.R.
	5-MT	945 kg	2,083 lb.	
	Gross Vehicle Weight Rating (MVSS) 4-AT	1,400 kg	3,090 lb.	
		1,365 kg	3,010 lb.	
	Carrying (cargo) Weight Capacity 5-MT	45 kg	99 lb.	
ENGINE	Type	Water cooled, 4-cycle O.H.C.		
	Cylinder Arrangement	4-cylinder in-line, transverse		
	Bore and Stroke	74.0 x 86.5 mm	2.91 x 3.41 in.	
	Displacement	1,488 cm³	91 cu. in.	
	Compression Ratio	9.2 : 1		
	Carburetor Venturi Diameter (Primary/Secondary/Auxiliary)	22/29/8.5 mm	0.87/1.14/0.33 in.	
	Valve Train	Timing belt driven, single overhead camshaft		
	Lubrication System	Trochoid pump		
	Fuel Required	Unleaded grade gasoline with 91 research octane number or higher.		
STARTER	Type	Direct drive / Gear reduction.		
	Normal output	0.8 kW / 1.0 kW / 1.4 kW		
	Norminal voltage	12 V		
	Hour rating	30 seconds		
	Direction of rotation	Clockwise as viewed from gear end		
	Weight	4.4 kg (9.7 lb) / ND: 3.8 kg (8.5 lbl MITSUBA: 3.4 kg (7.5 lbl / ND: 4.6 kg (10.1 lb) MITSUBA: 3.7 kg (8.1 lbl		
TRANSMISSION	Clutch 4-AT, 5-MT	Torque Converter		
		Single plate dry, diaphragm spring		
	Transmission 4-AT	4 forward speeds 1 reverse with torque converter		
	5-MT	Synchronized 5 forward 1 reverse		
	Primary Reduction	Direct 1 : 1		
	Gear Ratio	5-MT	4-AT	
	1st	3.181	2.500	
	2nd	1.823	1.560	
	3rd	1.192	1.031	
	4th	0.866	0.777	
	5th	0.718	–	
	Reverse	2.916	1.954	
	Final Reduction 4-AT	Single helical gear, 3.933		
	5-MT	Single helical gear, 4,250		
	Clutch Lining Area	146 cm²	22.6 sq. in.	
AIR CONDITIONER	Cooling capacity	3,500 K cal	(15,672 Btu/h)	
	— Conditions:			
	Compressor rpm	1,800 rpm/2,600 rpm (SANDEN)		
	Outside air temperature	27.5°C	(81.5°F)	
	Outside air humidity	50%		
	Condenser air temperature	35°C	(95°F)	
	Condenser air velocity	4.5 m/sec.		
	Blower capacity	400 m³/h	(14,126 cu.ft/h)	
	Compressor (KEIHIN) Type	Radial type		
	No. of cylinders	4		
	Piston Displacement	150 cc/rev.	(9.15 cu. in/rev.)	
	Max. rpm	7,000 rpm		
	Lubricant/capacity	70 – 90 cc	(2.4 3.0 US oz.)	
	Compressor (SANDEN) Type	Positive Displacement Spiral		
	Displacement	68.9 cc/rev	4.20 cu. in/rev.	
	Max. allowable Continuous Speed	10,000 rpm		
	Max. Downshift Speed	12,000 rpm		
	Oil Charge	120 – 140 cc	4.1 – 4.7 US. oz.	
	Condenser	Corrugated fin type		

3-16

specs

	ITEMS		METRIC	ENGLISH	NOTES
AIR CONDITIONER	Evaporator		Corrugated fin type		
	Blower	Type	Sirocco fan		
		Motor input	145 W (12 V)		
		Speed control	Infinitely variable		
		Max. capacity	270 m³/h	(9.537 cu.ft/h)	
	Temp. Control		Air-mix type		
	Comp. Clutch	Type	Dry, single plate, V-belt-1A		
		Power consumption	48 W max. (12 V)		
	Refrigerant	Type	R-12		
		Quantity	0.8 ± 0.05 kg	(1.76 ± 0.11 lbs)	
STEERING	Gear Type		Rack and Pinion		
	Overall Ratio		19.1 : 1		
	Turns, lock-to-lock		3.89		
	Steering Wheel Diameter		370 mm	14.6 in.	
SUSPENSION	Front		Independent: Strut with torsion-bar spring		
	Rear		Trailing arm		
WHEEL ALIGNMENT	Camber	Front/Rear	0° ± 1°/−3/4° ± 1/4°		
	Caster		2° ± 1°		
	Toe	Front	0 ± 3 mm	0.118 ± 0.118 in.	
		Rear	in 2 ± 2 mm	in 0.079 ± 0.079 in.	
	Steering Axis Inclination		12° ± 1/2°		
BRAKES	Type, Front		Self-adjusting power assisted ventilated disc brake type		
	Type, Rear		Power assisted leading-trailing shoe drum type		
	Lining Surface Area Front/Rear		35.8/57.6 cm²	5.5/8.9 sq. in.	
	Effective Disc Diameter		190 mm	7.5 in.	
	Brake Drum I.D.		200 mm	7.9 in.	
	Parking Brake Type		Mechanical expanding, rear two wheel brakes		
TIRES	Size		P175/70R13		
ELECTRICAL	Battery		12V - 47AH		
	Starter		HM 12V−1.4kW MT 12V−1.0kW		CAL Only 12V−0.8kW
	Alternator		12V−55 amps		
	Fuses		20A, 15A, 10A		
	Main Fuses		55A, 45A		
	Headlights		12V−65/45W		(C-6)
	Speedometer/Gauge Lights		12V−3.4W, 14V−1.4W		
	Front Turn Signal Lights/Position Lights		12V−32CP		(SAE 1157)
	Side Maker Lights (front and rear)		12V−5W/12V−3CP		(SAE 168)
	Warning Indicator Lights		14V−1.4W		
	Dome Light		12V−5W		
	Rear Turn Signal Lights		12V · 32CP		(SAE 1156)
	Stop/Taillights		12V−32CP/2CP		(SAE 2057)
	Turn Signal Indicator Lights		14V−1.4W		
	Luggage Area Lights		12V · 3.4W		
	Back-up Lights		12V−32CP		(SAE 1156)
	License Lights		12V−4CP		(SAE 67)
	High Mount Stop Light		12V−21CP		
	Heater Panel Lights		12V · 1.4W		

(cont'd)

specs

	ITEMS		METRIC	ENGLISH	NOTES
WHEEL ALIGNMENT	Camber	Front/Rear	0°40′ ± 1°/0° ± 1°		
	Caster		1°55′ ± 1°		
	Toe	Front	0 ± 3 mm	0 ± 0.118 in.	
		Rear	0 ± 2 mm	0 ± 0.079 in.	
	Steering Axis Inclination		11° 25′ ± 1/2°		
BRAKES	Type, Front		Self-adjusting power assisted ventilated disc brake type		
	Type, Rear		Power assisted leading-trailing shoe drum type		
	Lining Surface Area Front/Rear		35.8/57.6 cm²	5.5/8.9 sq. in.	
	Effective Disc Diameter		190 mm	7.5 in.	
	Brake Drum I.D.		200 mm	7.9 in.	
	Parking Brake Type		Mechanical expanding, rear two wheel brakes		
TIRES	Size		165SR13		
ELECTRICAL	Battery		12V—47AH		
	Starter		12V—1.0 kW		
	Alternator		12V—55 amps		
	Fuses		20A, 15A, 10A		
	Main Fuse		55A, 45A		
	Headlights		12V—65/45W		(061)
	Speedometer/Gauge Lights		12V—3.4W, 14V—1.4W		
	Front Turn Signal Lights		12V—32CP/5W		(SAE 1157)
	Side Marker Lights (front and rear)		12V—5W/12V—2CP		
	Warning Indicator Lights		14V—1.4W		
	Dome Light		12V—5W		
	Rear Turn Signal Lights		12V—32CP		(SAE 1156)
	Stop/Taillights		12V—32CP/3CP		(SAE 1157)
	Turn Signal Indicator Lights		14V—1.4W		
	Luggage Area Lights		12V—3.4W		
	Back-up Lights		12V—32CP		(SAE 1156)
	License Lights		12V—4CP		(SAE 67)
	High Mount Stop Light		12V—21CP		
	Heater Panel Lights		12V—1.4W		

Body Specifications

Sedan

Unit: mm (in.)

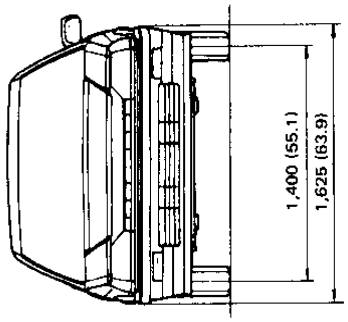

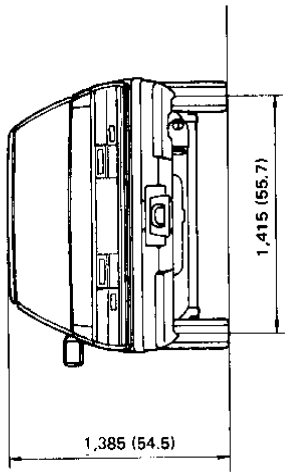

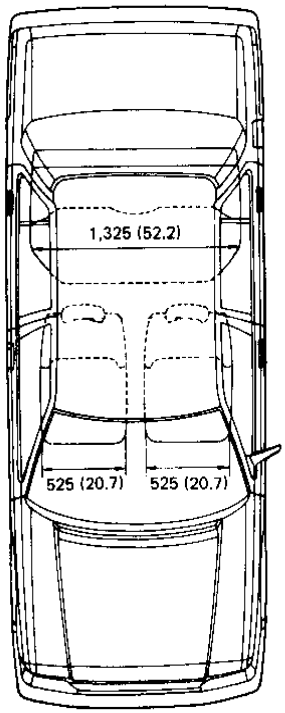

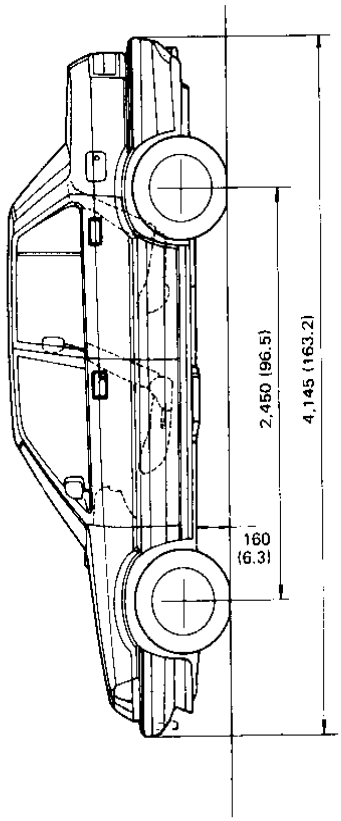

specs

Hatchback

Unit: mm (in.)

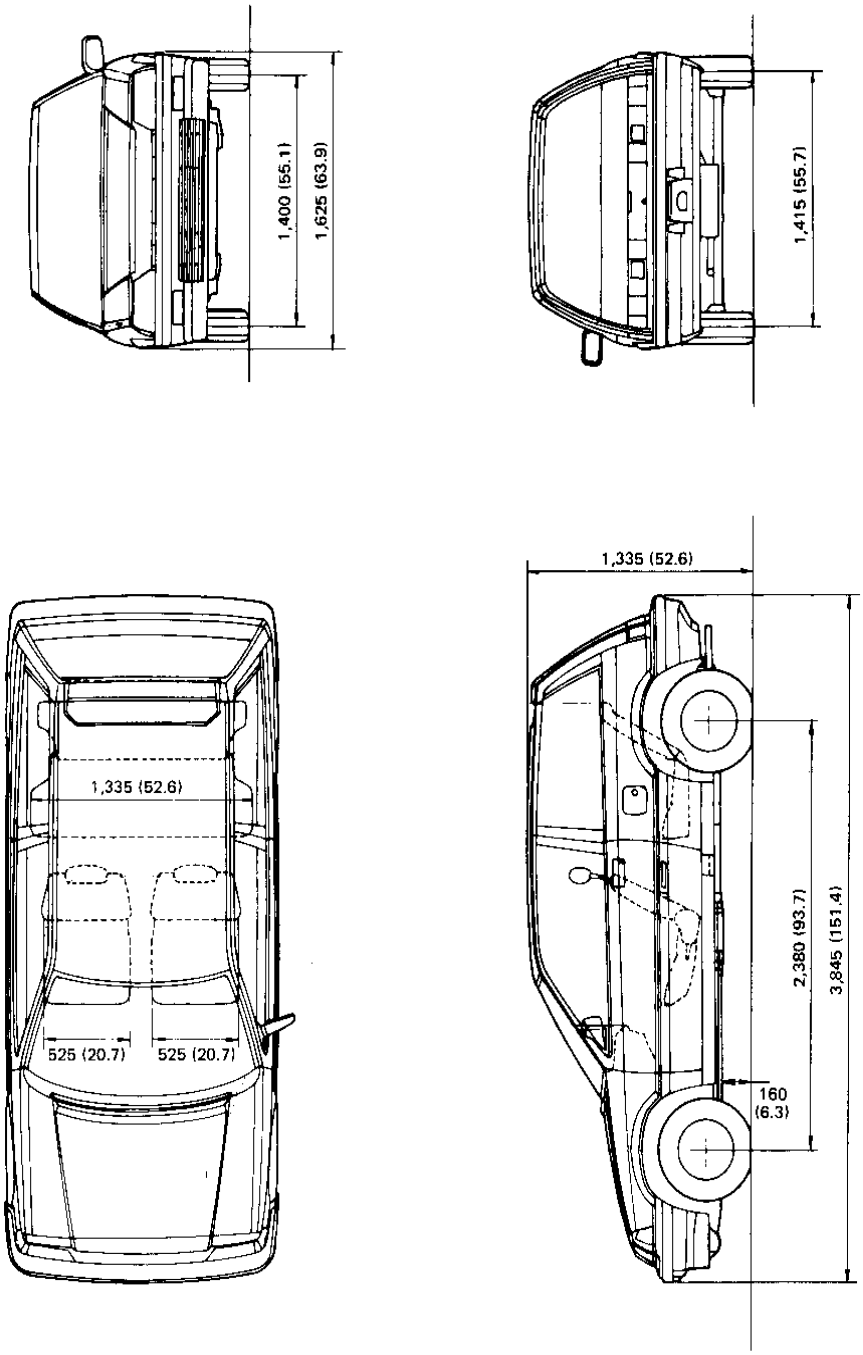

(cont'd)

Body Specifications (cont'd)

Wagon

Unit: mm (in.)

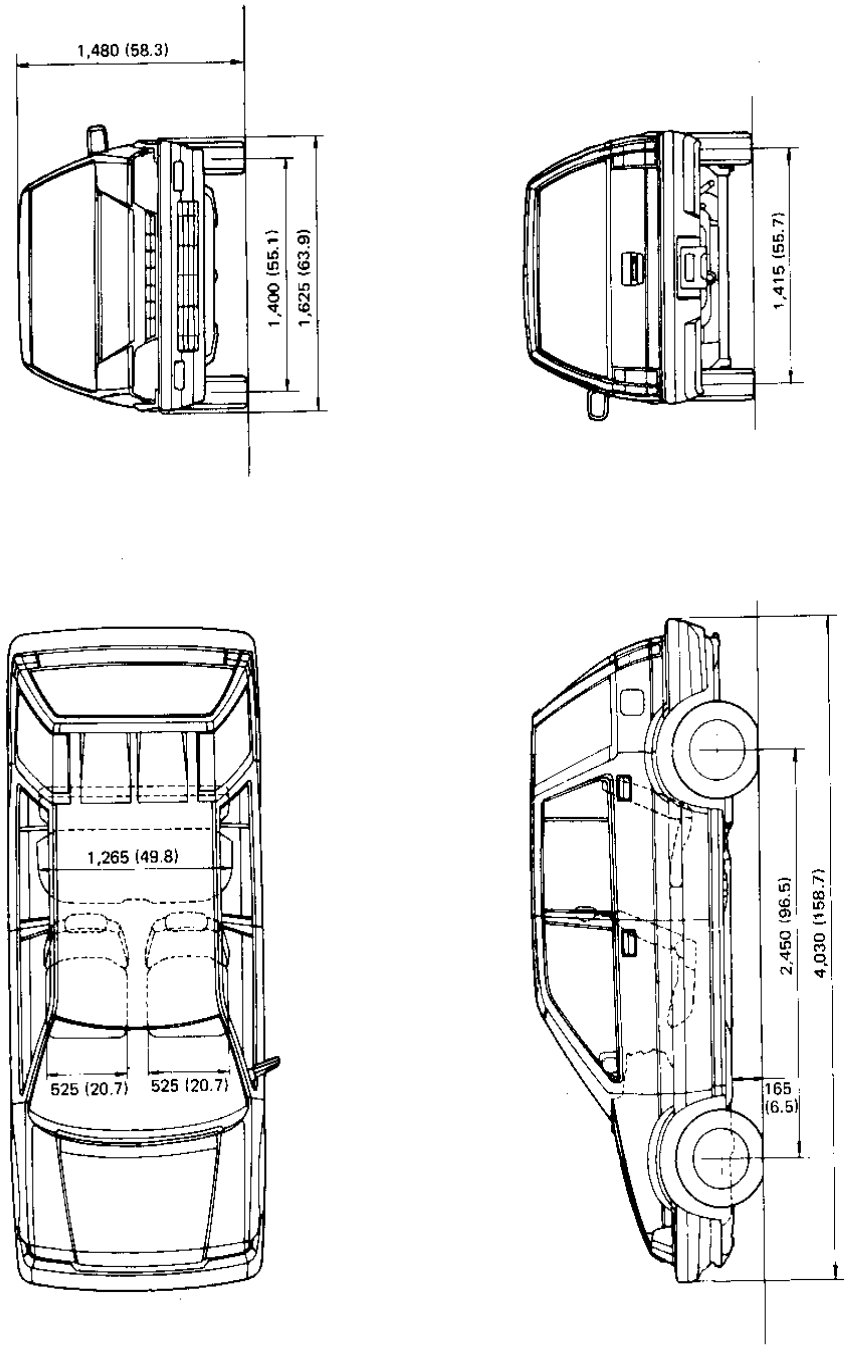

3-22

specs

Wagon 4WD

Unit: mm (in.)

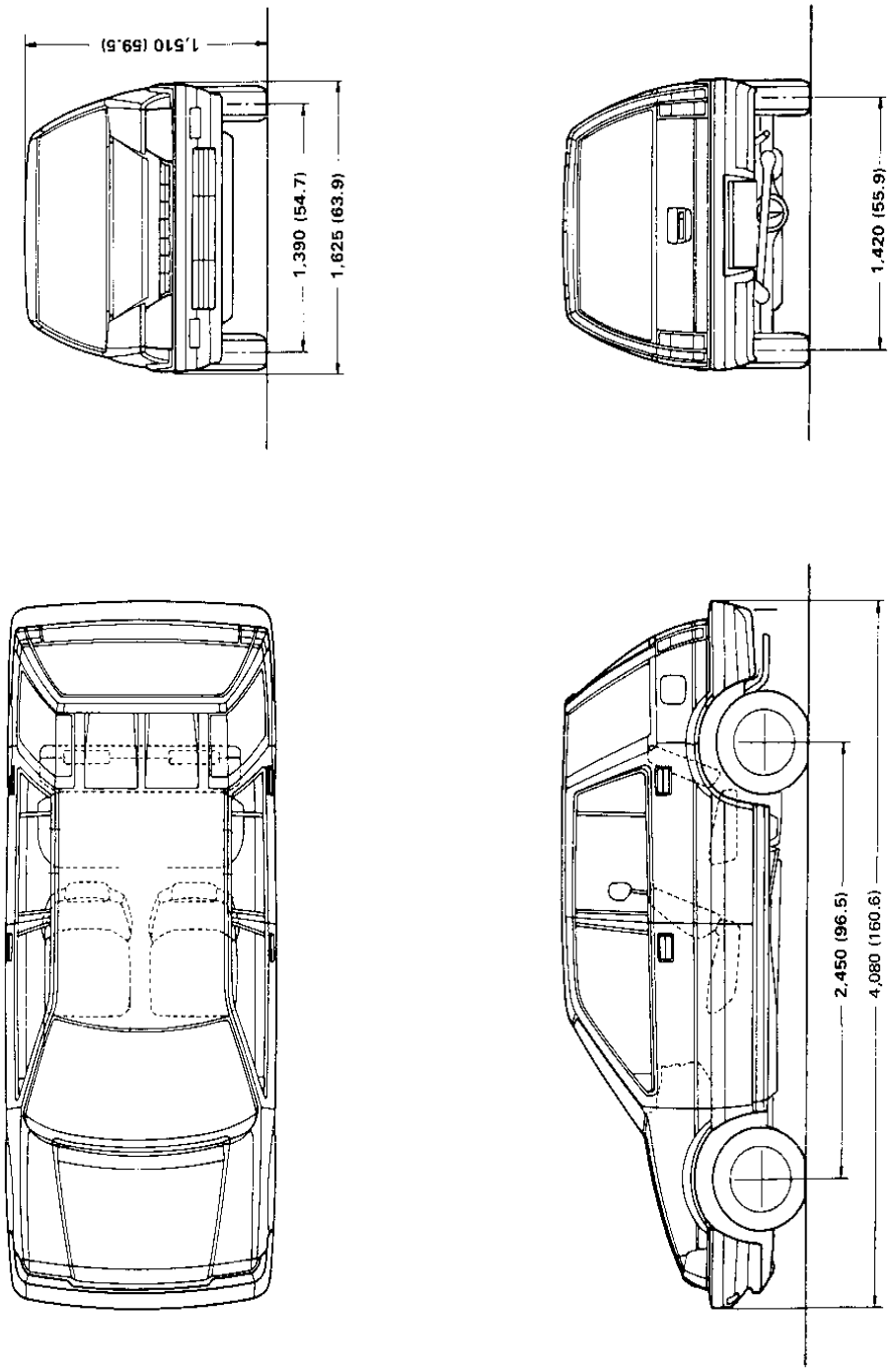

3-23

Maintenance

Lubrication Points

(Except Wagon 4WD)

No.	LUBRICATION POINTS		LUBRICANT
1	Engine		API Service Grade: "Fuel Efficient" SF grade only SAE Viscosity: See chart below
2	Transmission	Manual Automatic	API Service Grade: SE or SF SAE30, 10W—30, 10W—40 or 20W—40 grade oil DEXRON Automatic transmission fluid
3	Brake reservoir		Brake fluid DOT 3 or DOT 4
4 5 6 7 8 9 10 11 12 13	Front wheel bearings and seals Torsion-bar spring Tie rod ball joints Steering gear box (Manual) Shift lever pivot (Manual) Select lever (Automatic) Battery terminals Pedal linkage Rear brake shoe linkage Steering column bushings		Multipurpose Grease
14	Caliper	Piston seal Dust seal Caliper pin Piston	Silicone Grease
15 16 17 18 19 20 21	Shift clevis bushings Door hinges upper and lower Door opening detents Engine hood latch Hood hinges Fuel filler door Trunk hinges		Multipurpose Grease
22	Steering gear box (Power)		Honda steering grease P/N 08704—99969
23	Power steering reservoir		Honda power steering fluid P/N 08208—99961

Recommended Engine Oil
("Fuel Efficient" SF Grade Only)

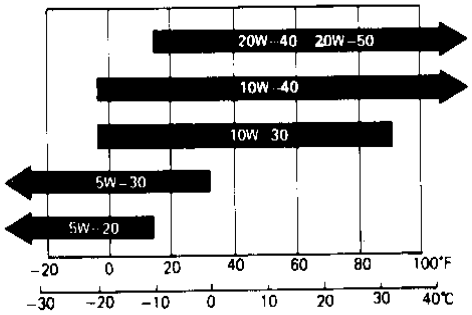

Engine oil viscosity for ambient temperature ranges.

4-2

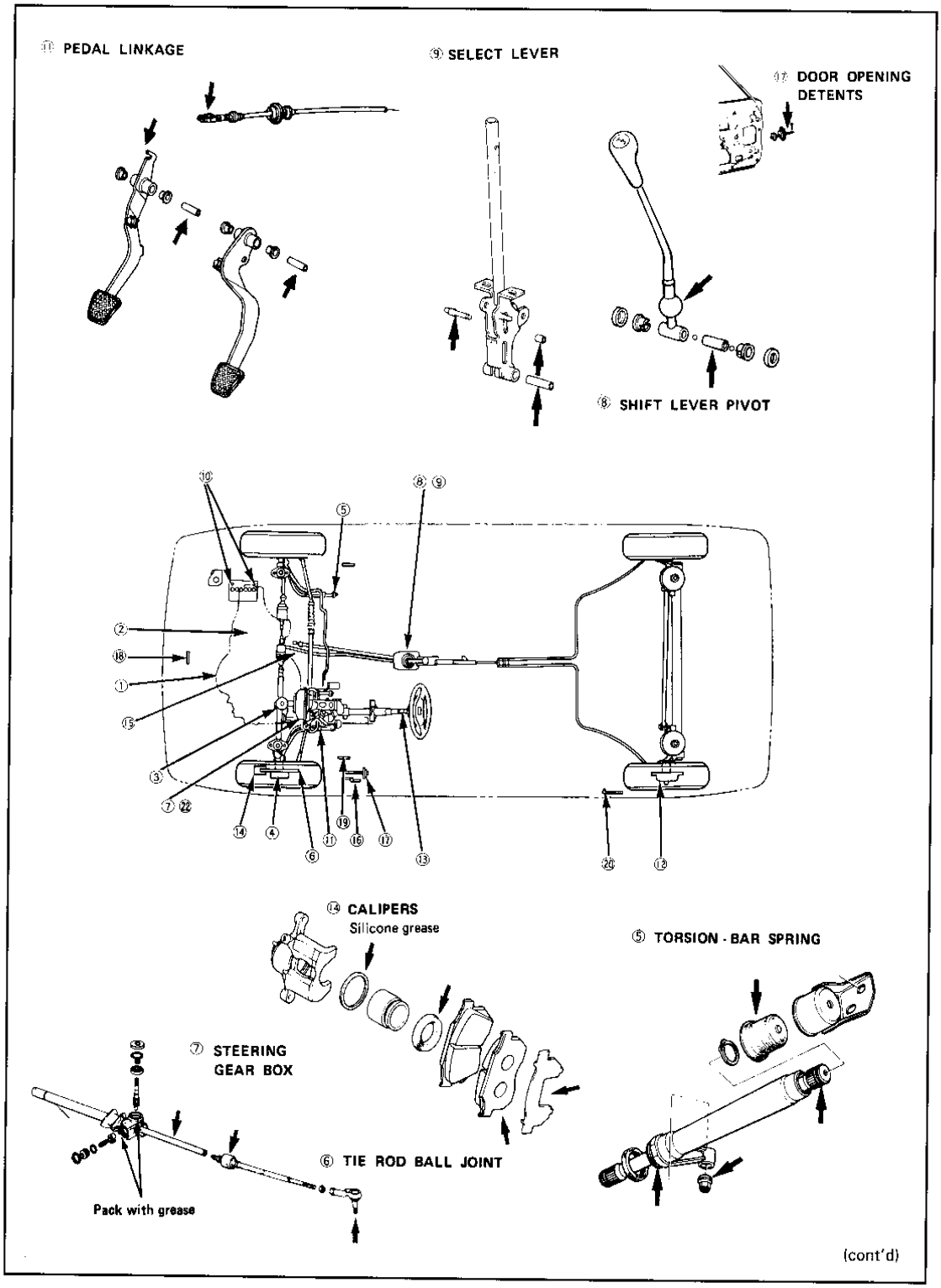
㉑ PEDAL LINKAGE
⑨ SELECT LEVER
⑰ DOOR OPENING DETENTS
⑧ SHIFT LEVER PIVOT
⑭ CALIPERS
Silicone grease
⑤ TORSION - BAR SPRING
⑦ STEERING GEAR BOX
⑥ TIE ROD BALL JOINT
Pack with grease
(cont'd)

Lubrication Points (cont'd)

(Wagon 4WD)

No.	LUBRICATION POINTS	LUBRICANT
1	Engine	API Service Grade: "Fuel Efficient" SF grade only SAE Viscosity: See chart below
2	Manual transmission	API Service Grade: SE or SF SAE30, 10W—30, 10W—40 or 20W—40 grade oil
3	Brake reservoir	Brake fluid DOT 3 or DOT 4
4 5 6 7 8 9 10 11 12 13	Front wheel bearings and seals Torsion-bar spring Tie rod ball joints Steering gearbox Shift lever pivot Shift lever linkage Battery terminals Pedal linkage Rear brake shoe linkage Steering column bushings	Multipurpose Grease
14	Caliper — Piston seal Dust seal Caliper pin Piston	Silicone Grease
15 16 17 18 19 20	Door hinges upper and lower Door opening detents Engine hood latch Hood hinges Fuel filler door Tailgate hinges	Multipurpose Grease
21	Rear differential	Hypoid gear oil. API GL-5 SAE90 above 5°C (41°F) SAE80 below 5°C (41°F)

Recommended Engine Oil
("Fuel Efficient" SF Grade Only)

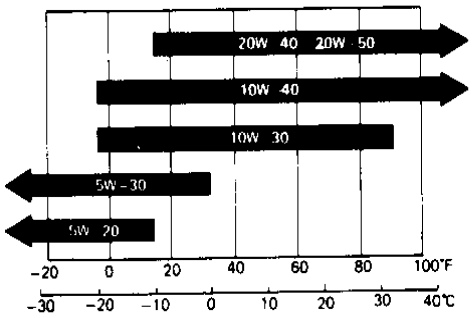

Engine oil viscosity for dmbient tempereature ranges.

4-4

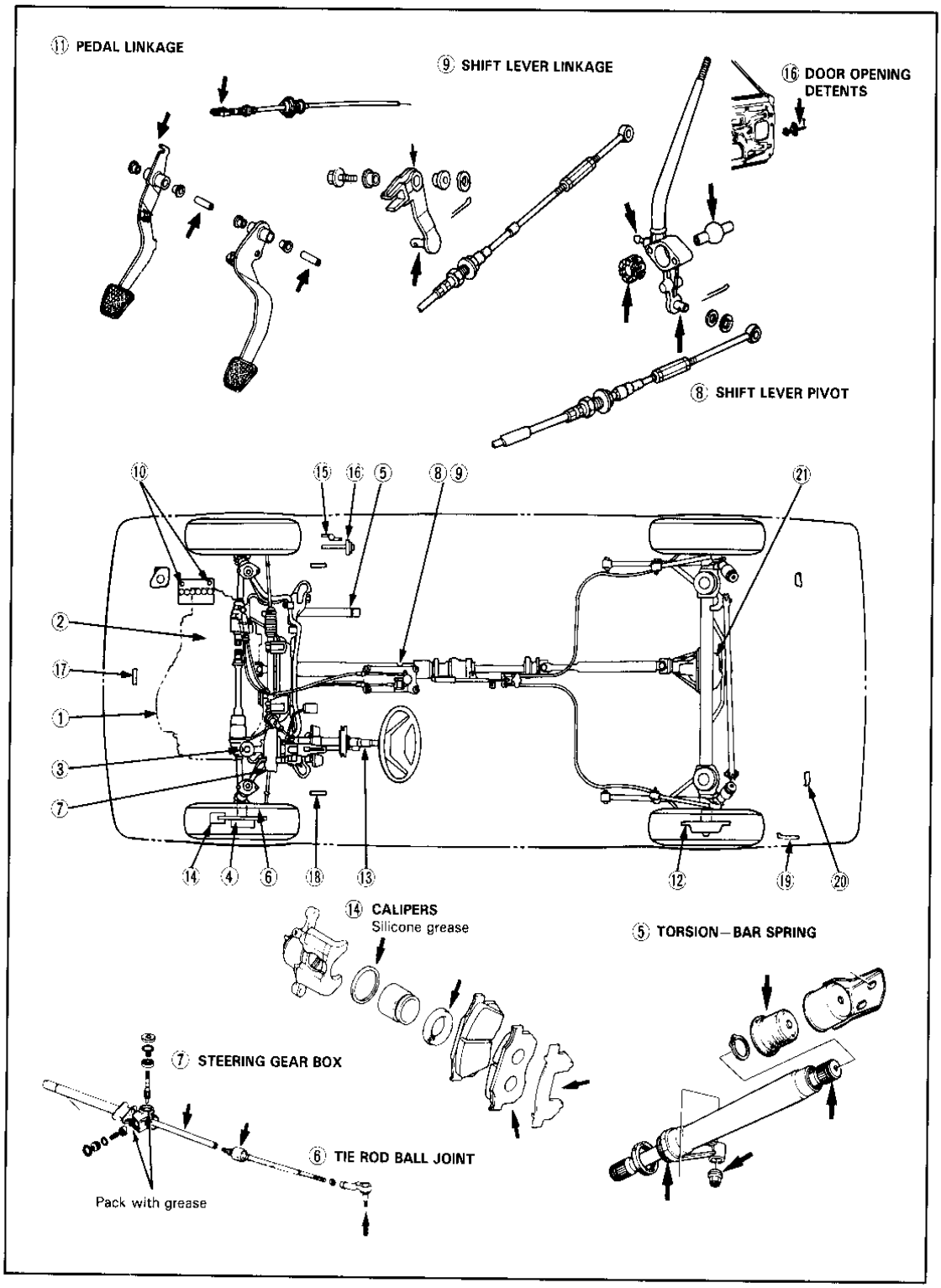
⑪ PEDAL LINKAGE
⑨ SHIFT LEVER LINKAGE
⑯ DOOR OPENING DETENTS
⑧ SHIFT LEVER PIVOT
⑭ CALIPERS
Silicone grease
⑤ TORSION—BAR SPRING
⑦ STEERING GEAR BOX
⑥ TIE ROD BALL JOINT
Pack with grease

4-5

Maintenance Schedule

The maintenance listed below must be performed at mileage intervals shown to ensure safe and efficient operating conditions and proper emission levels. This checklist is arranged in hot/cold/hot sequence so you can work on a hot engine while waiting for it to cool, and then run cold and hot emissions checks.

R = Replace C = Clean
I = Inspect
After inspection, clean, adjust, repair or replace if necessary.

MAINTENANCE ITEM	MAINTENANCE INTERVALS					NOTES	SEC & PAGE
X 1,000 miles	15	30	45	60	75		
X 1,000 km	24	48	72	96	120		
months	12	24	36	48	60		
Engine oil	Replace every 7,500 miles (12,000 km) or 6 months					3.5ℓ (3.7 qts.) w/filter change	8-3
Engine oil filter							8-4
Manual transmission and rear differential oil		R		R		Manual transmission: 2.3ℓ (2.4 qts.) Rear differential (Wagon 4WD only): 1.2ℓ (1.3 qts.)	14-2 15-2 17-2
Automatic transmission fluid		R		R		2.4ℓ (2.5 qts.) DEXRON® A.T.F.	16-7
Rear brakes		I		I		Minimum thickness: 2 mm (0.08 in.)	21-26
Parking brake	I	I		I		Fully engaged: 4-8 clicks	21-3
Front brake pads	Inspect every 7,500 miles (12,000 km) or 6 months					Min. thickness: Pad (lining) 3.0 mm (0.12 in.)	21-6
Front brake discs and calipers	I	I	I	I	I	Min. thickness: Ventilated Disc 15 mm (0.6 in.) Solid Disc 10 mm (0.4 in.)	21-9
Suspension mounting bolts	I	I	I	I	I	Check tightness of bolts.	20-7 24, 25
Exhaust pipe and muffler	I	I	I	I	I	Check condition and tightness.	9-4
*2 Fuel line connections				I		Check fuel lines for loose connections, cracks and deterioration. Retighten loose connections and replace any damaged or deformed parts.	11-7
*1 Fuel filter and hoses				R		Same as carbureted engine	11-35, 78
*2 Fuel filters (front and rear) and engine compartment fuel hoses				R		The rubber fuel hoses need periodic replacement since they are subject to cracks and deterioration during a long period of use.	11-7, 18
*1 Fuel line connections		I **		I		Same as carbureted engine	11-35
Steering operation, tie rod ends, steering gearbox and boots	I	I		I		Check rack grease and steering linkage. Check the boot for damage or leaking grease.	19-3 18
Front wheel alignment	I	I	I	I	I		20-3
Power steering system	I	I	I	I	I		19-29
Power steering pump belt		* I		I			19-27

*1 Fuel-Injected Engine
*2 Carbureted Engine
* Tension adjustment only.
** Recommended by manufacturer only for Fuel-Injected Engine sold in California.

CAUTION: The following items must be serviced more frequently on cars normally used under severe driving conditions. Refer to the chart below for the appropriate maintenance intervals.

"Severe driving conditions"

A: Repeated short distance driving
B: Driving in dusty conditions
C: Driving in severe cold weather
D: Driving in areas using road salt or other corrosive materials
E: Driving on rough and/or muddy roads

Condition	Maintenance item	Maintenance operation	Interval
A B • • •	Engine oil and oil filter	R	Every 3,000 miles (5,000 km) or 3 months
A B • D E	Front brake discs and calipers	I	Every 7,500 miles (12,000 km) or 6 months
A B C • E	Clutch release-arm travel	I	
• B C • E	Power steering system	I	

MAINTENANCE ITEM	MAINTENANCE INTERVALS					NOTES	SEC & PAGE
X 1,000 miles	15	30	45	60	75		
X 1,000 km	24	48	72	96	120		
months	12	24	36	48	60		
Brake hoses and lines	I	I	I	I	I		21-30
Brake fluid		R		R		Use only DOT 3 or 4 fluid Check that brake fluid level is between the upper and lower marks on the reservoir.	21-10
Clutch release arm travel	I	I	I	I	I	Free play at arm: 4.0—5.0 mm (5/32—13/64 in.)	13-3
Cooling system hoses and connections		I		I			10-2
Radiator coolant			** R			Cooling system capacity 1500: 4.5ℓ(1.2 US gal) 1300: 3.4ℓ(0.9 US gal) Check specific gravity for freezing point.	10-3
Alternator drive belt		* I		I		7—10 mm (0.28—0.39 in.) @10 kg (22 lbs.) tension.	25-33
Crankcase emission control system —PCV valve		*** I		I		If clicking sound is heard as you pinch the PCV hose between the PCV valve and intake manifold, Valve is OK.	*1 12-77 *2 12-41
*2—Blow-by filter		*** I		I		Replace if filter is dripping with oil or obstructed by dust.	12-41
Distributor cap and rotor				I			25-20
Ignition wiring				I		Maximum resistance 25,000 ohms	25-18
Spark plugs		R		R		Carbureted Engine NGK: BUR5EB-11 or ND: W16EKR-S11 1.0—1.1 mm (0.039—0.043 in.) Fuel-Injected Engine	25-29
Valve clearance (engine cold)	I	I	I	I	I	In & Aux: 0.17—0.22 mm (0.007—0.009 in.) Exhaust: 0.22—0.27 mm (0.009—0.011 in.)	6-27
Air cleaner element		R		R			*1 11-35 *2 11-8
*2 Choke mechanism		C		I		Spray with carburetor cleaner.	11-11
*2 Choke opener operation (cold)				I		Choke blade should partially open on start up.	11-12
*2 Intake air control (cold)				I		Door should stay up for 3 sec. after cranking.	12-42
*2 Fast idle unloaderr (cold)				I		Engine should hold fast idle.	11-11
Evaporative emission control system (cold)				I		Disconnect upper hose at purge control diaphragm valve and connect vacuum gauge to hose. Start engine and let idle. Vacuum should not appear.	*1 12-81 *2 12-43
*2 Secondary air supply system (cold)				I		Mixture Control System	12-46
*2 E.G.R. System (cold)				I		Connect vacuum gauge to EGR valve hose. Vacuum should not be available at 4,500—5,000 rpm.	12-43
Warm up the engine to normal operating temperature.							
*2 Intake air control (hot)				I		Door should be down.	12-47

*1 Fuel-Injected Engine *2 Carbureted Engine
*Tension adjustment only.
**Thereafter, replace every 2 years or 30,000 miles (48,000 km) which comes first.
***Recommended by manufacturer only for cars sold in California.

(cont'd)

Maintenance Schedule (cont'd)

MAINTENANCE ITEM	MAINTENANCE INTERVALS					NOTES	SEC & PAGE
X 1,000 miles	15	30	45	60	75		
X 1,000 km	24	48	72	96	120		
months	12	24	36	48	60		
Ignition timing				I		Red mark at idle. See page 25-28 for idle speeds.	25-28
Ignition timing control				I		Vacuum advance at idle	*1 12-82 *2 12-43,52
*2 Fast idle unloader (hot)				I		With engine warm, idle speed should drop below 1,400 rpm	11-14
*2 Throttle controller — Dashpot				I		With the engine idling, disconnect hose from the throttle controller. Engine speed should rise to 1700 ± 300 rpm.	12-60
Idle speed				I			*1 11-73 *2 11-24
Idle CO				I		Check with propane enrichment or CO meter.	*1 12-80 *2 11-28
*2 E.G.R. System (hot)				I			12-48
*2 Secondary air supply system (hot)				I		Mixture control system Air Injection system	12-56, 55
Evaporative-emission control system (hot)				I			*1 12-82, 83 *2 12-50 thru. 53
Catalytic converter heat shield				I		Check condition and tightness	*1 12-80 *2 12-61

*1 Fuel-Injected Engine *2 Carbureted Engine

4-8

Engine

Cylinder Head/Valve Train

Engine Block

Engine Lubrication

Intake Manifold/Exhaust System

Engine Removal/Installation

Engine Removal/Installation

WARNING

- Make sure jacks and safety stands are placed properly and hoist brackets are attached to correct positions on the engine (pages 5-10 and 11).
- Apply parking brake and block rear wheels, so car will not roll off stands and fall on you while working under it.

CAUTION: Use fender covers to avoid damaging painted surfaces.

1. Disconnect the battery negative terminal first then the positive terminal.
2. Unbolt the hood brackets and remove the hood.
   - Disconnect the washer fluid tube.

   CAUTION: Use care when storing the hood to avoid damaging the paint.
3. Drain the engine oil. Remove the oil filler cap to speed draining. Reinstall the drain plug with a new washer.
4. Drain the coolant from the radiator into a clean pan so it may be re-used. Remove the radiator cap to speed draining.

   WARNING Use care when removing radiator cap to avoid scalding by hot coolant or steam.
5. Drain transmission oil/fluid. Use a 3/8" drive socket wrench to remove the drain plug. Remove the oil filler plug to speed draining. Reinstall the drain plug with a new washer.
6. Remove the air intake duct and remove the air cleaner cover.

(Fuel-Injected engine:)

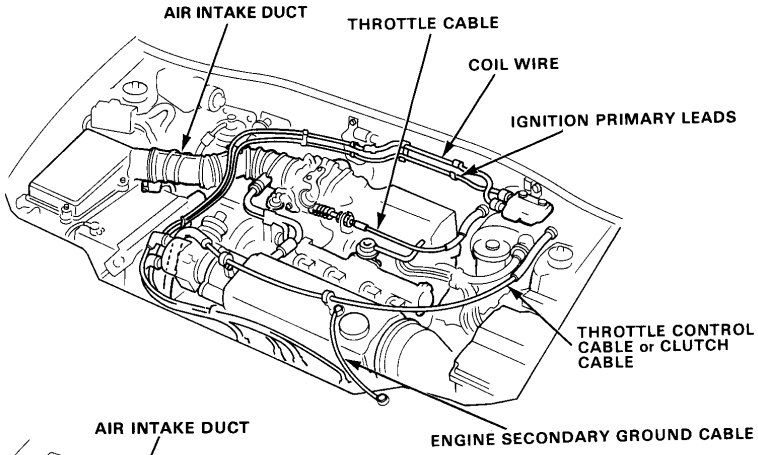

(Carbureted engines:)

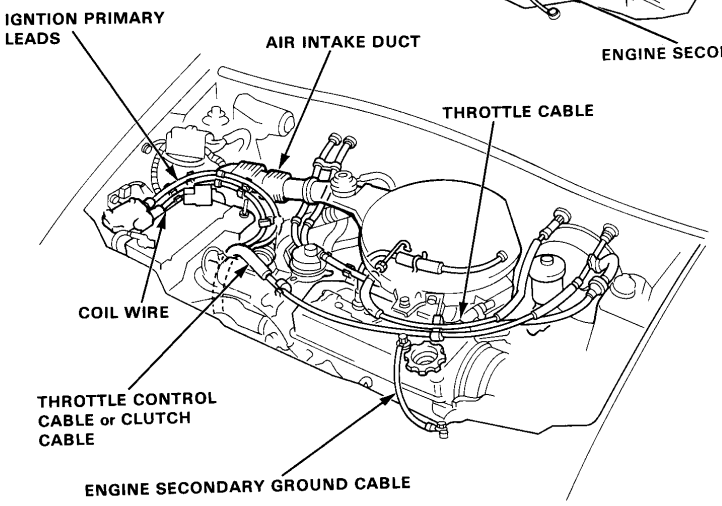

(Fuel-Injected engine:)

7. Relieve fuel pressure by slowly loosening the service bolt on the fuel filter about one turn (Section 11).

WARNING **Do not smoke while working on fuel system. Keep open flame away from work area.**

CAUTION:
- **Before disconnecting any fuel line, the fuel pressure should be relieved as described above.**
- **Place a shop towel over the fuel filter to prevent pressurized fuel from spraying over the engine.**

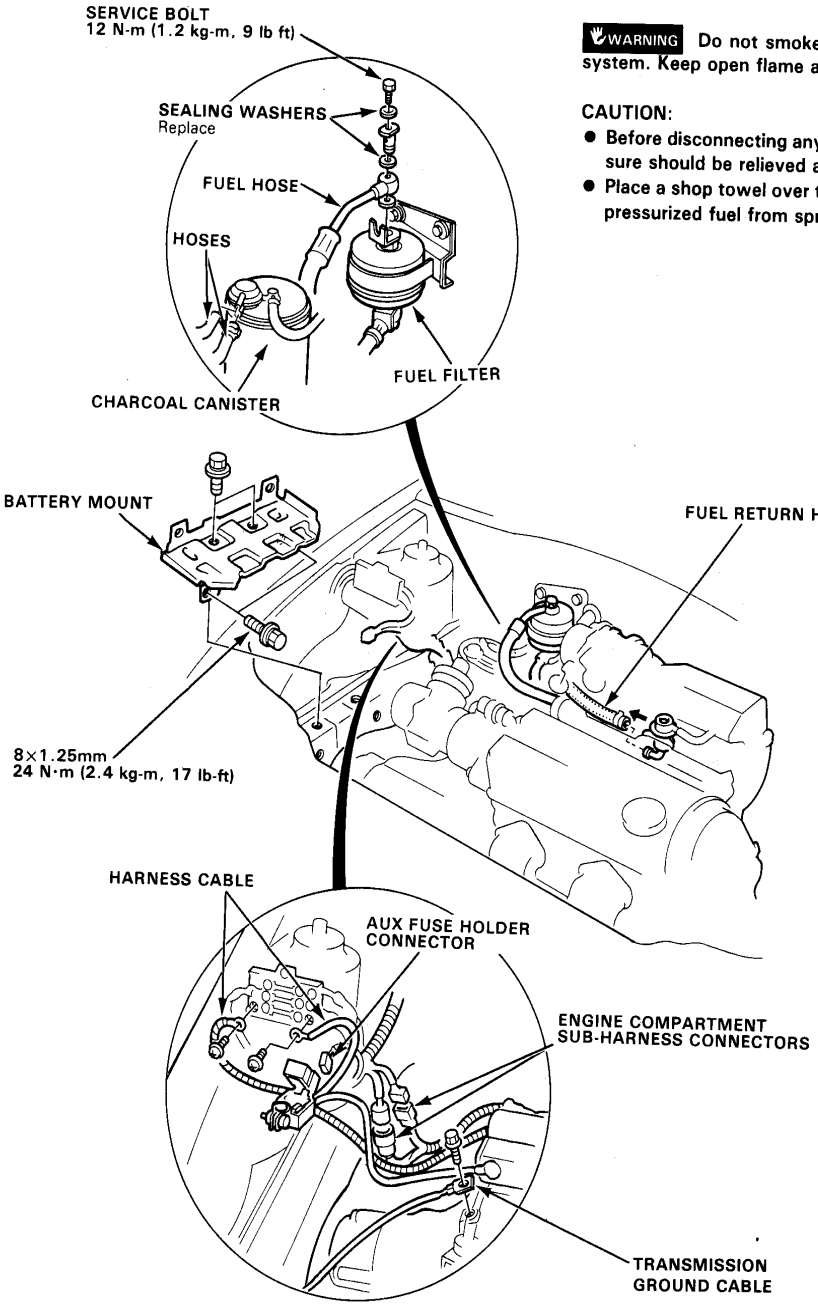

- Disconnect the engine compartment sub-harness cable at the fuse box.

(cont'd)

Engine Removal/Installation (cont'd)

(Fuel-Injected engine:)

8. Remove the throttle cable by loosening the lock nut and the throttle cable adjusting nut, then slip the cable end out of the throttle bracket and accelerator linkage.

NOTE: Take care not to bend the cable when removing it. Do not use pliers to remove the cable from the linkage. Always replace a kinked cable with a new one.

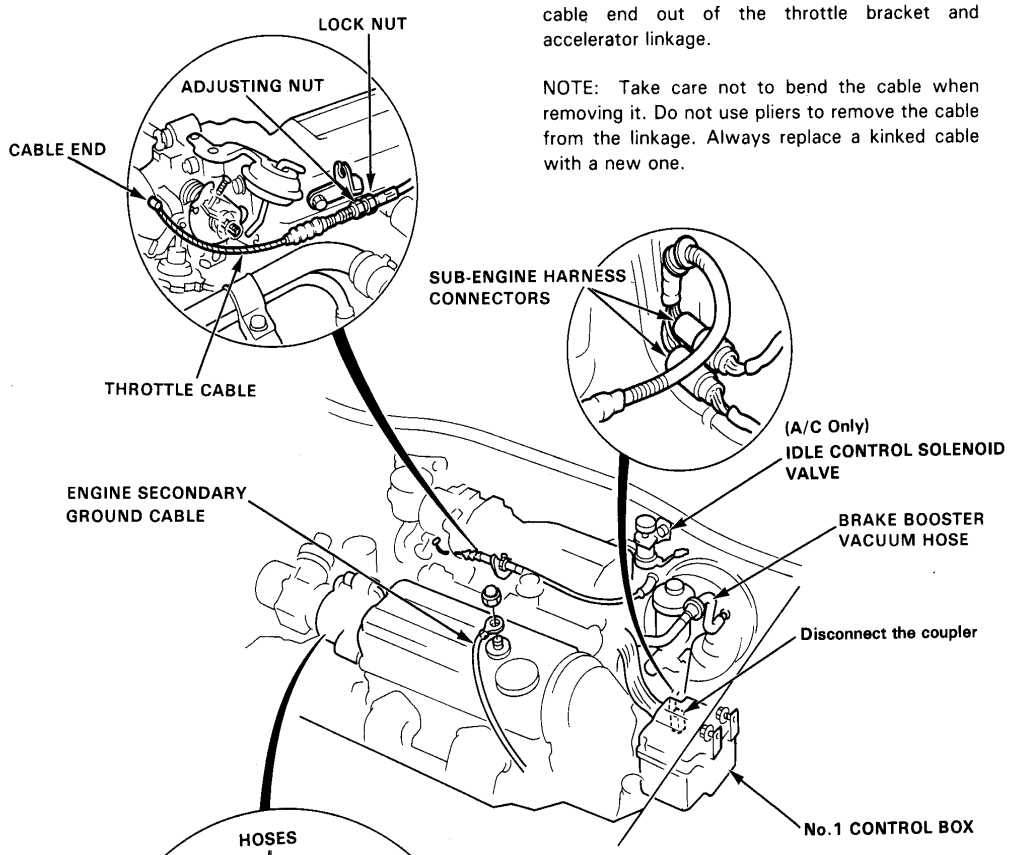

- Disconnect the No.1 control box connector. Lift the control box off its the bracket, and let it hang next to the engine.

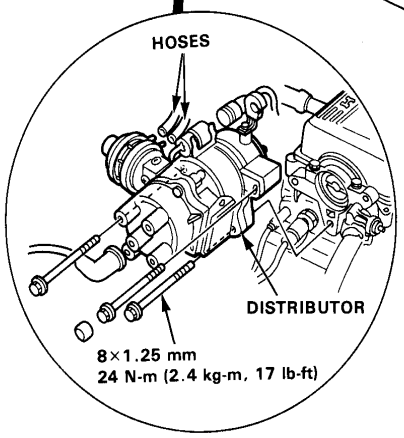

9. Disconnect the ignition wires at the spark plugs and remove the distributor.

(Carbureted engines:)

10. Remove the throttle cables by loosening the locknuts and the adjusting nuts, then slip the cable out of the brackets and carburetor linkage.

    NOTE: Take care not to bend the cable when removing it. Do not use pliers to remove the cable from the linkage. Always replace a kinked cable with a new one.

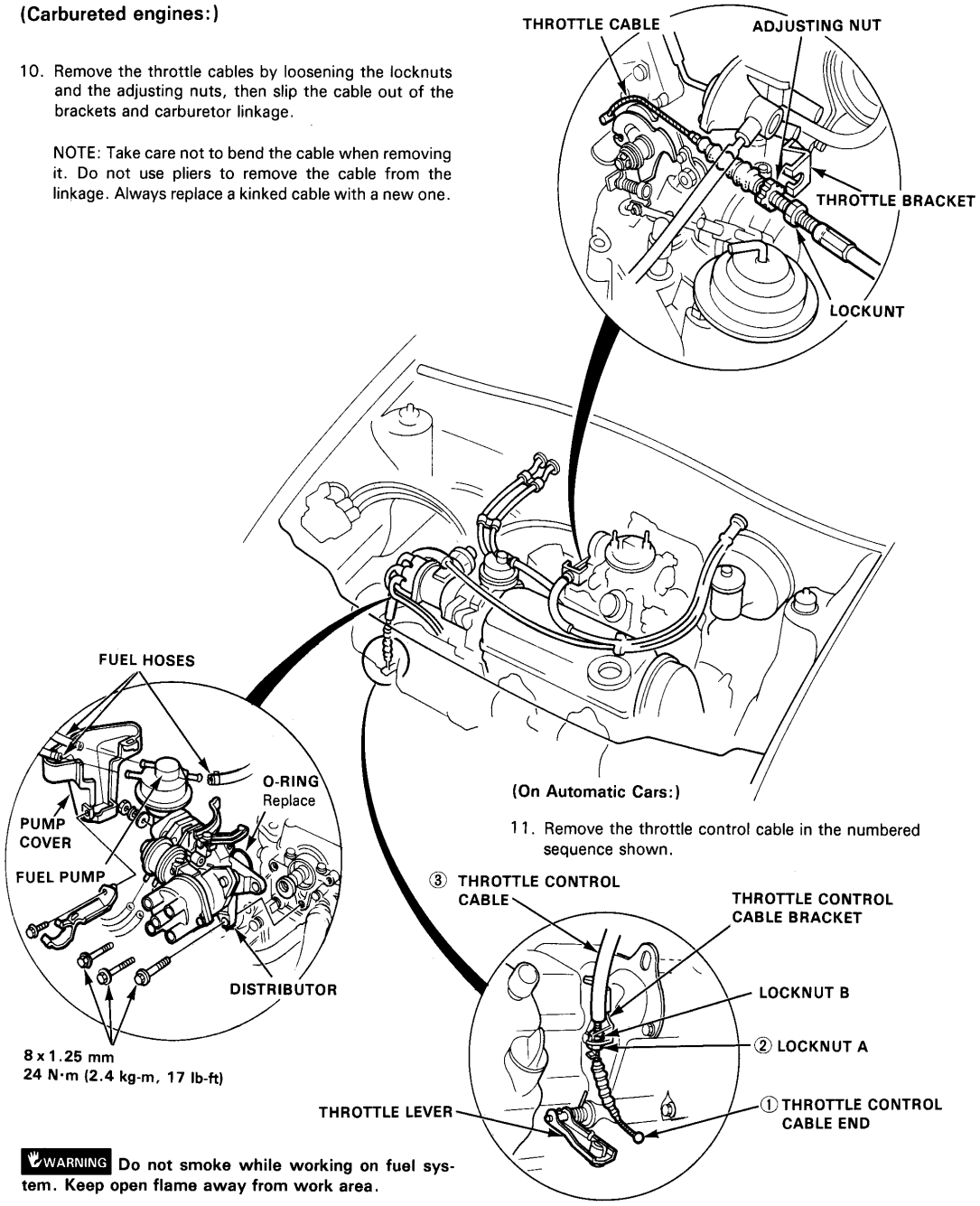

(On Automatic Cars:)

11. Remove the throttle control cable in the numbered sequence shown.

WARNING **Do not smoke while working on fuel system. Keep open flame away from work area.**

12. Remove the fuel pump cover and fuel pump.
13. Disconnect the ignition wires at the spark plugs and remove the distributor.

CAUTION: Do not loosen locknut B as it will change the transmission shift points.

(cont'd)

Engine Removal/Installation (cont'd)

(Carbureted engines:)

No.1. CONTROL BOX

- Disconnect the No.1 control box connector. Lift the control box off its bracket, and let it hang next to engine.

CAL/HI ALT Only:

- Remove the air jet cotroller.

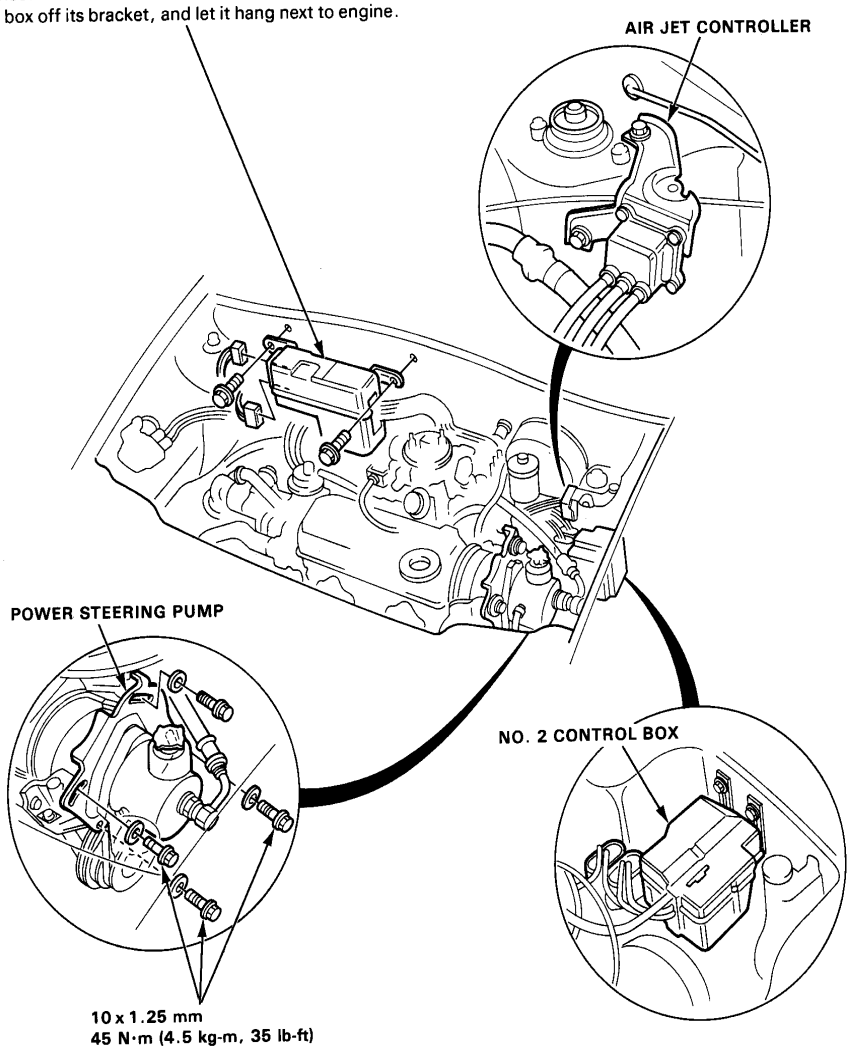

On Car with Power Steering:

14. Remove the mounting bolts and V-belt for the power steering pump, then without disconnecting the hose, pull the pump away from its mounting bracket.

CAL/HI ALT Only:

- Disconnect the No.2 control box connector and remove the No.2 control box.

5-6

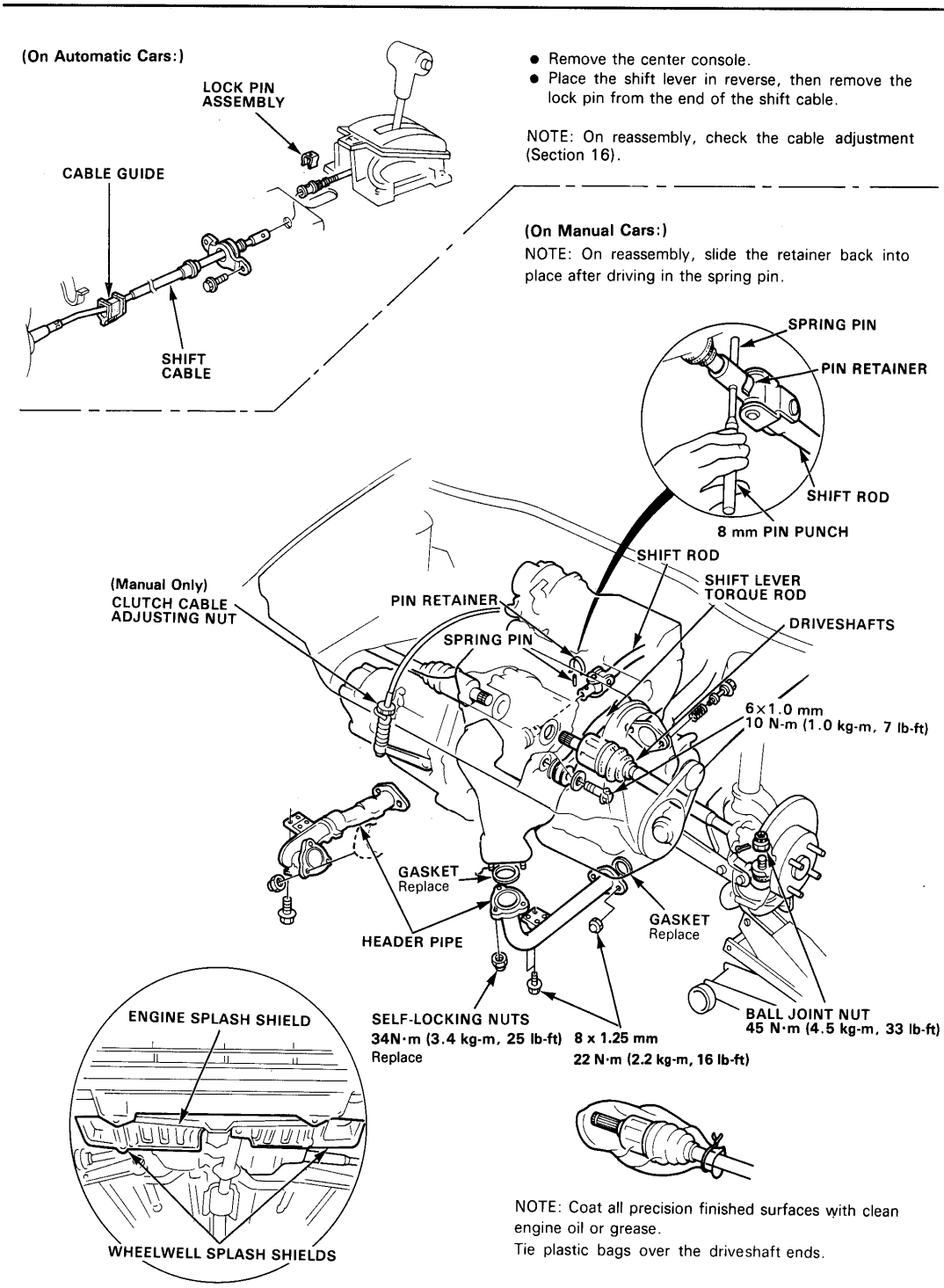
(On Automatic Cars:)
LOCK PIN ASSEMBLY
CABLE GUIDE
SHIFT CABLE
• Remove the center console.
• Place the shift lever in reverse, then remove the lock pin from the end of the shift cable.
NOTE: On reassembly, check the cable adjustment (Section 16).
(On Manual Cars:)
NOTE: On reassembly, slide the retainer back into place after driving in the spring pin.
SPRING PIN
PIN RETAINER
SHIFT ROD
8 mm PIN PUNCH
SHIFT ROD
SHIFT LEVER TORQUE ROD
DRIVESHAFTS
(Manual Only)
CLUTCH CABLE ADJUSTING NUT
PIN RETAINER
SPRING PIN
6×1.0 mm
10 N·m (1.0 kg-m, 7 lb-ft)
GASKET
Replace
HEADER PIPE
GASKET
Replace
SELF-LOCKING NUTS
34N·m (3.4 kg-m, 25 lb-ft)
Replace
8 x 1.25 mm
22 N·m (2.2 kg-m, 16 lb-ft)
BALL JOINT NUT
45 N·m (4.5 kg-m, 33 lb-ft)
ENGINE SPLASH SHIELD
WHEELWELL SPLASH SHIELDS
NOTE: Coat all precision finished surfaces with clean engine oil or grease.
Tie plastic bags over the driveshaft ends.

Engine Removal/Installation (cont'd)

(Wagon 4WD only:)

● Disconnect the control cables.

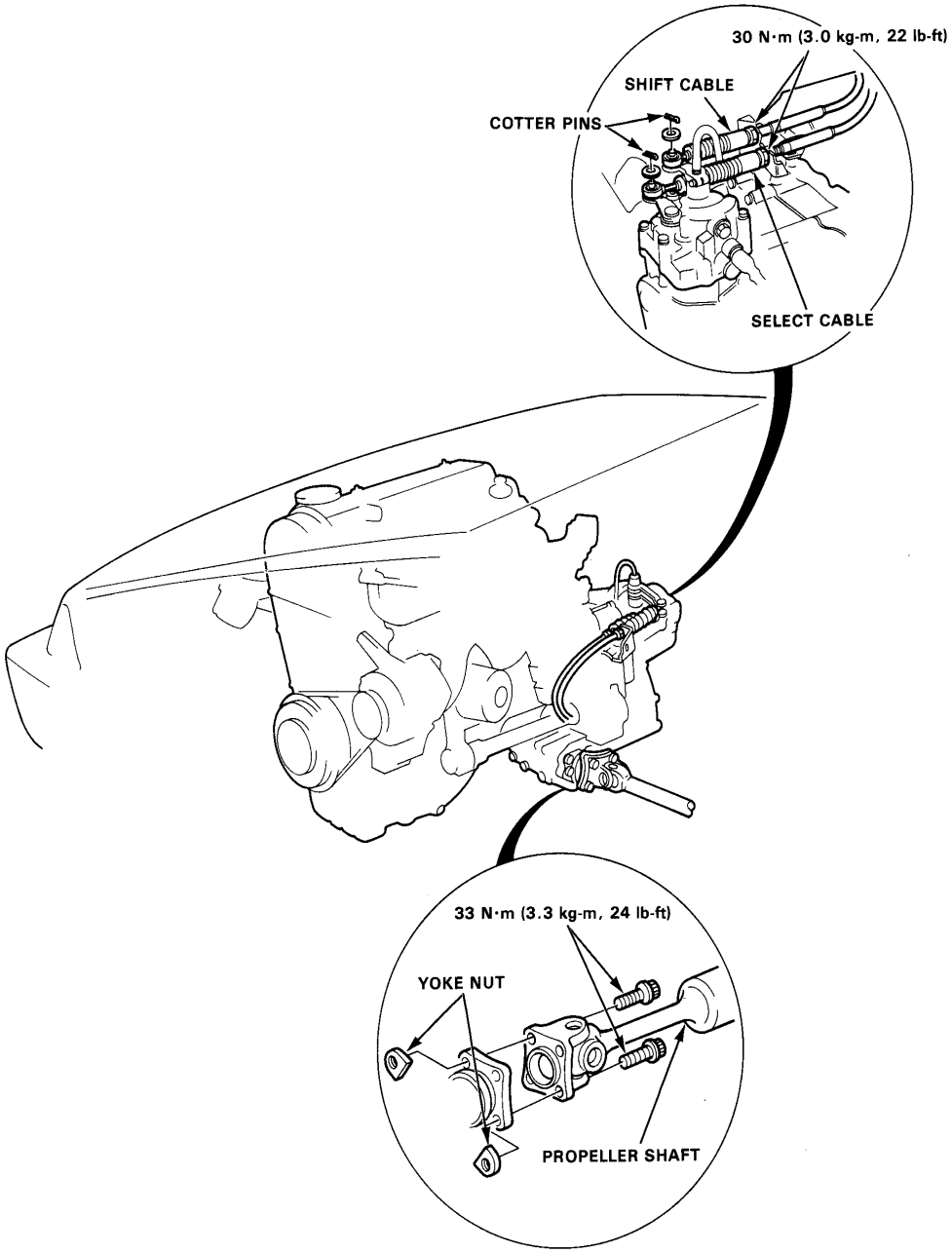

● Disconnect the propeller shaft at the transmission

5-8

15. Disconnect the radiator hoses and heater hoses.
16. Disconnect the transmission oil cooler hoses.

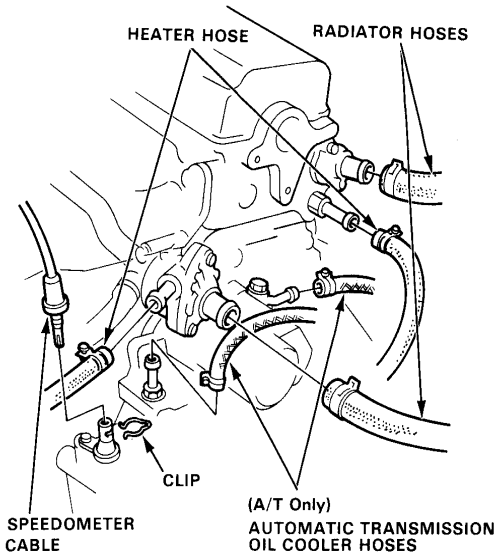

17. Remove the speedometer cable.

CAUTION: Do not remove the holder because the speedometer gear may fall into the transmission housing.

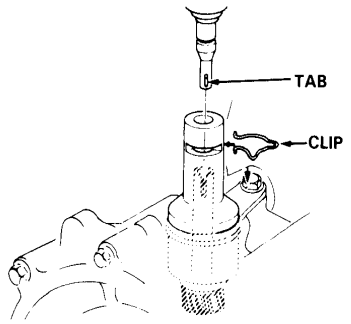

During Installation:

- Align tab on cable end with slot in holder.
- Install clip so bent leg is on groove side. After installing, pull speedometer cable to make sure it is secure.

18. On Cars with A/C:

- Loosen the belt adjusting bolt and idler pulley nut.
- Remove the compressor mounting bolts, then lift the compressor out of the bracket with hoses attached, and wire it up to the front beam.

NOTE: The compressor can be moved without discharging the air conditioner system.

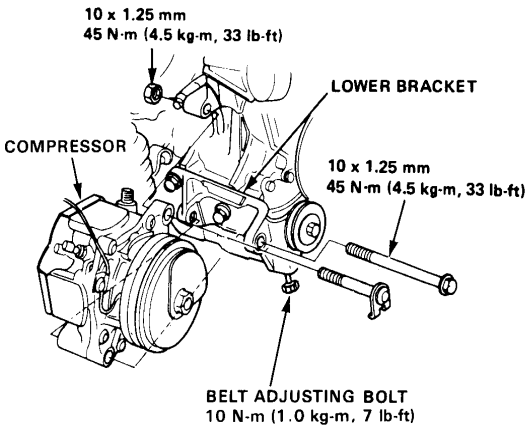

19. Remove the alternator:

- Disconnect the alternator wire harness connectors.
- Remove the belt adjusting bolt and remove the belt.
- Remove the alternator mount bolt and remove the alternator.

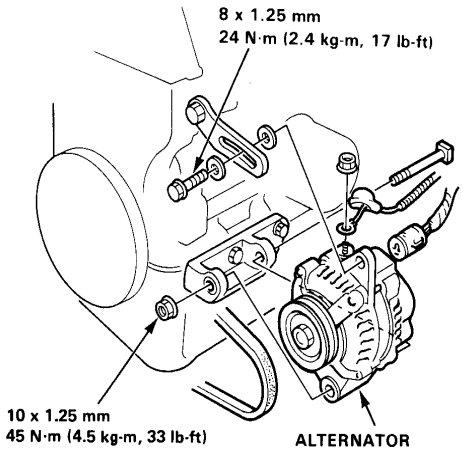

(cont'd)

Engine Removal/Installation (cont'd)

20. Attach a chain hoist to the engine block hoist brackets and raise the hoist just enough to remove slack from the chain.
21. Remove the rear transmission mount bracket.
22. Remove the bolts from the front transmission mount.
23. Remove the bolt from the engine side mount.

NOTE: When installing the transmission mount, make sure that the rubber damper mounting surface is not contaminated with oil.

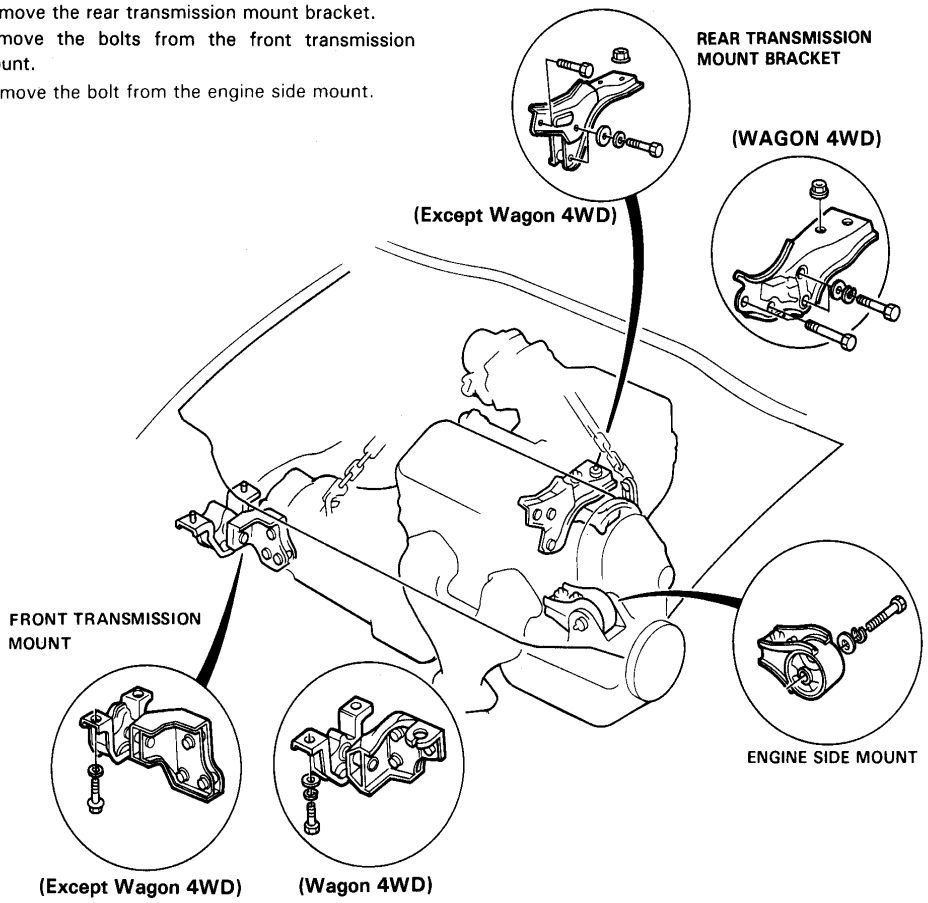

24. Check that the engine/transaxle is completely free of vacuum, fuel, and coolant hoses, and electrical wires.
25. Slowly raise the engine approximately 6" and stop. Check once again that all wires and hoses have been disconnected from the engine/transaxle.
26. Raise the engine/transaxle all the way and remove it from the car.

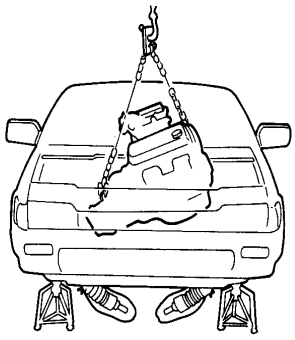

27. Install the engine in the reverse order of removal. After the engine is in place:

- Torque engine mount bolts in sequence shown.

CAUTION: Failure to tighten the bolts in the proper sequence can cause excessive noise and vibration, and reduce bushing life: check that the bushings are not twisted or offset.

- Check that the spring clip on the end of each driveshaft clicks into place.

CAUTION: Use new spring clips on installation.

- Inspection for fuel leakage.
  - After assembling fuel line parts, turn on the ignition switch (do not operate the starter) so that the fuel pump is operated for approximately two seconds and the fuel is pressurized. Repeat this operation two or three times and check whether any fuel leakage has occurred at any point in the fuel line.
- Bleed air from the cooling system at the bleed bolt with the heater valve open.
- Adjust the throttle cable tension.
- Adjust the alternator belt tension.
- Check the clutch pedal free play.
- Check that the transmission shifts into gear smoothly.
- Reinstall the A/C compressor and A/C wiring.
- Clean battery posts and cable terminals with sandpaper, assemble, then apply grease to prevent corrosion.

ENGINE MOUNT TORQUE SEQUENCE

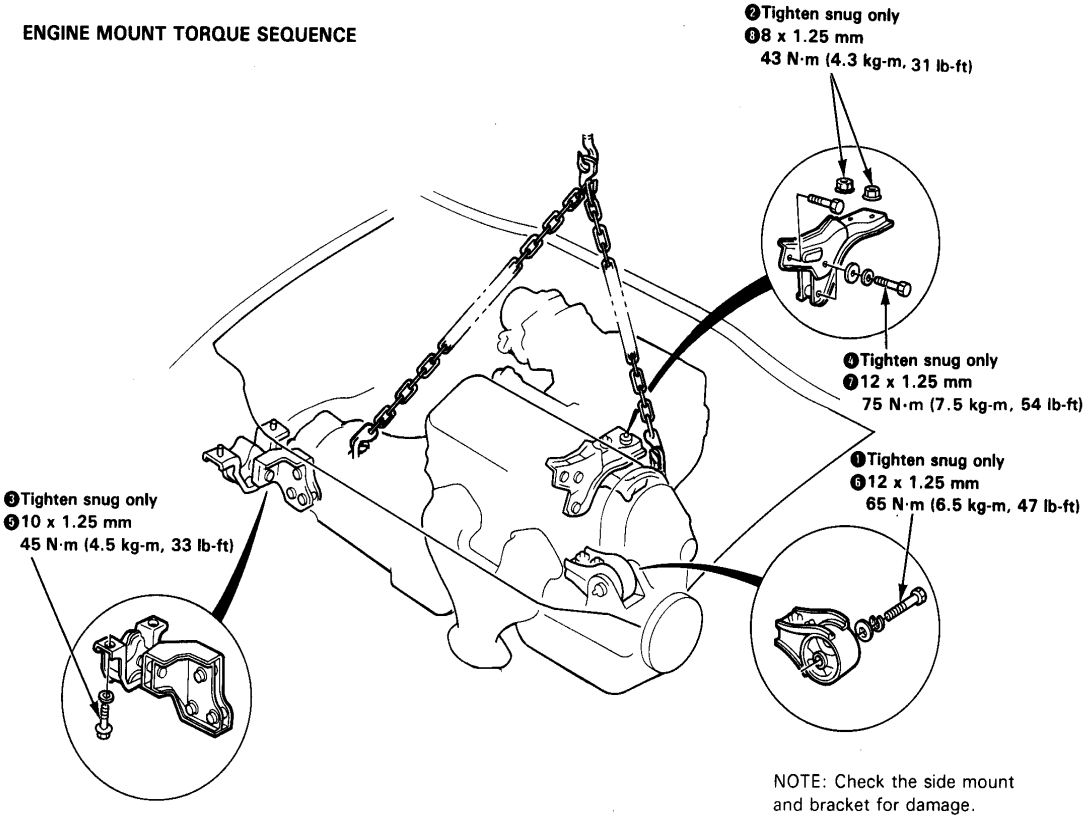

NOTE: Check the side mount and bracket for damage.

(cont'd)

Engine Removal/ Installation

Index (Engine)

NOTE: For manifold replacement, refer to Section 9.

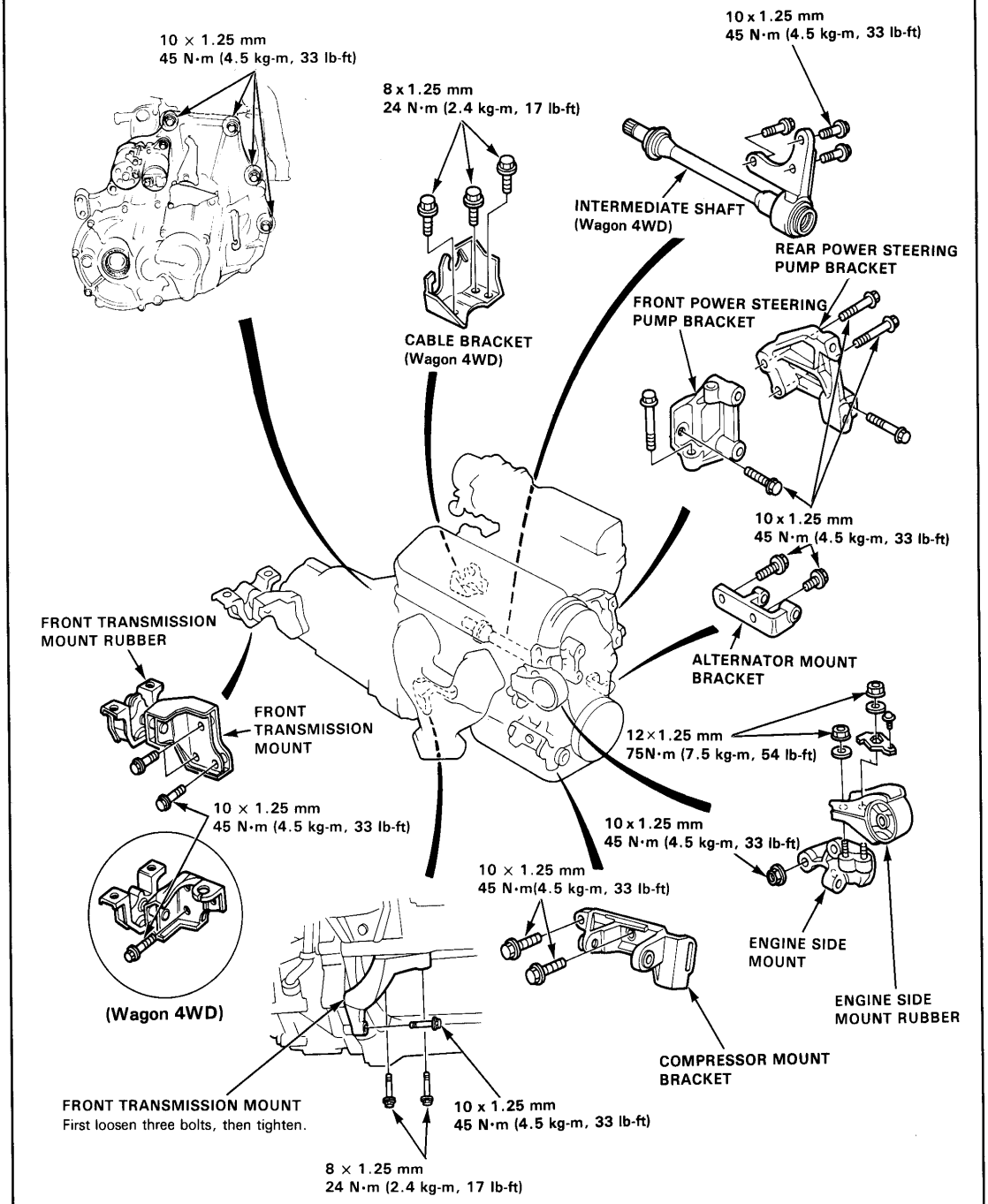

Cylinder Head/Valve Train

Cylinder Head/Valve Train

Illustrated Index

Carbureted Engine

(1500 shown; 1300 similar)

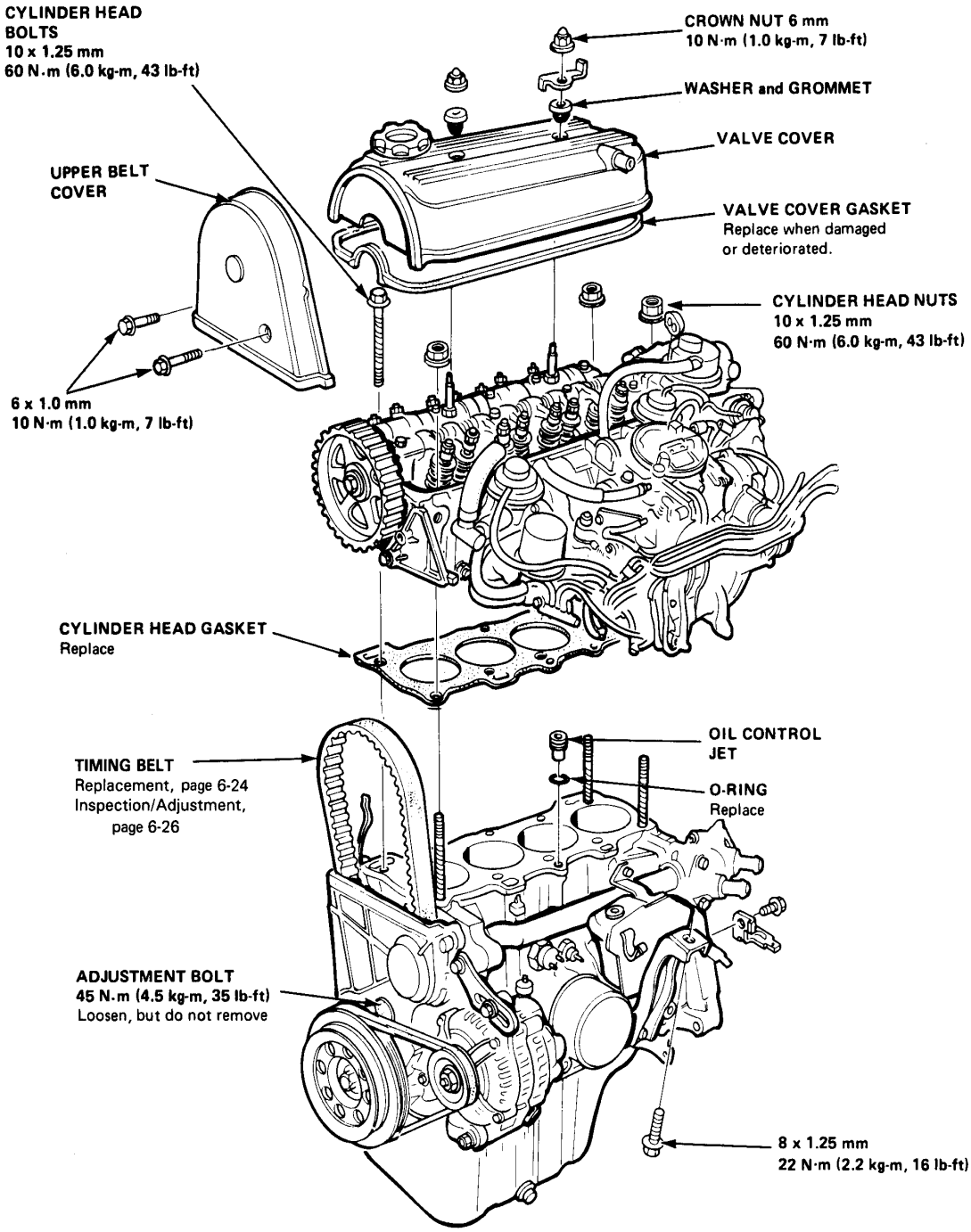

Fuel-Injected Engine

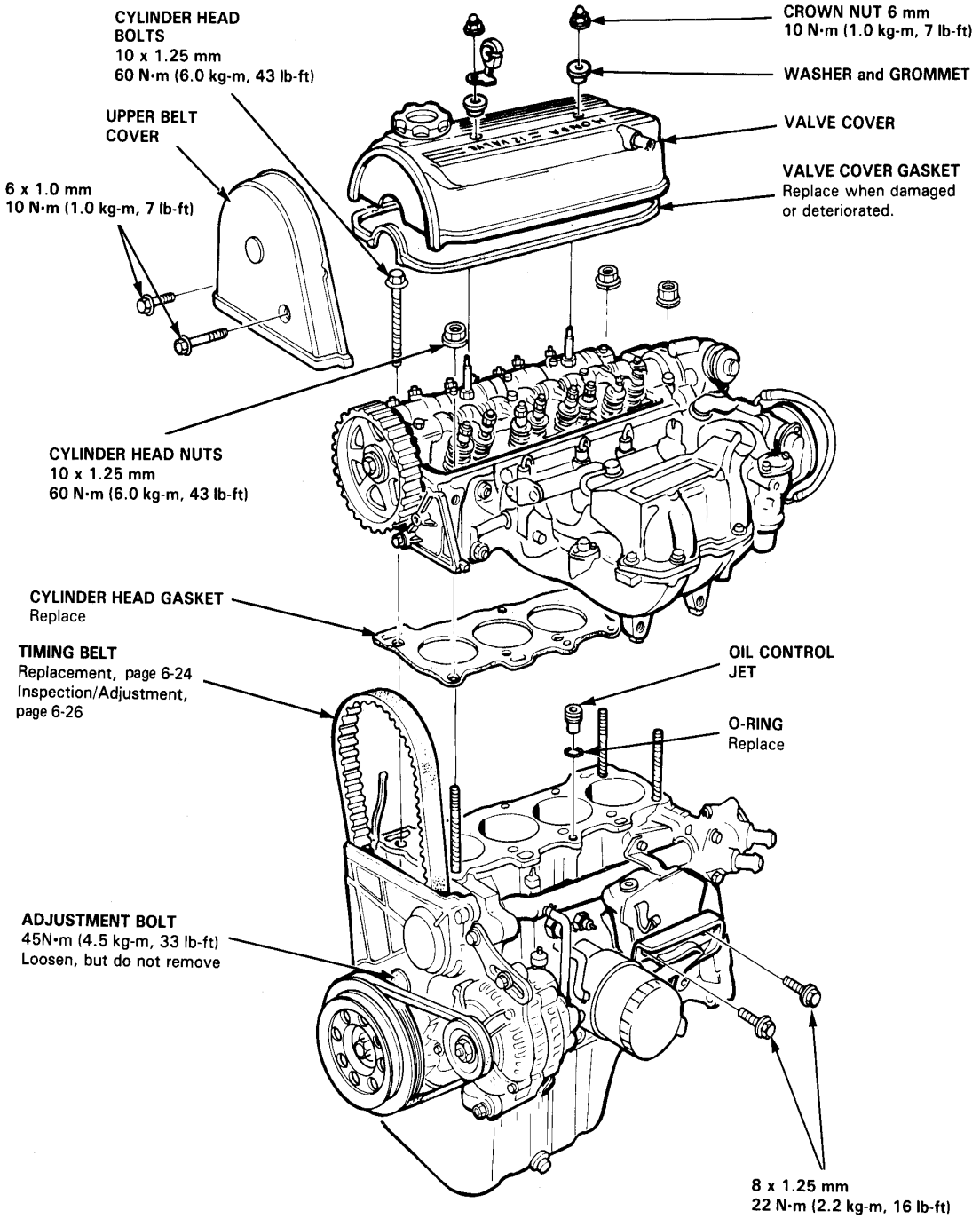

(cont'd)

Cylinder Head/Valve Train

Illustrated Index (cont'd)

Carbureted Engine shown : Fule-Injected Engine Similar

CAUTION: To avoid damaging the cylinder head, wait until the coolant temperature drops below 38°C (100°F) before removing it.

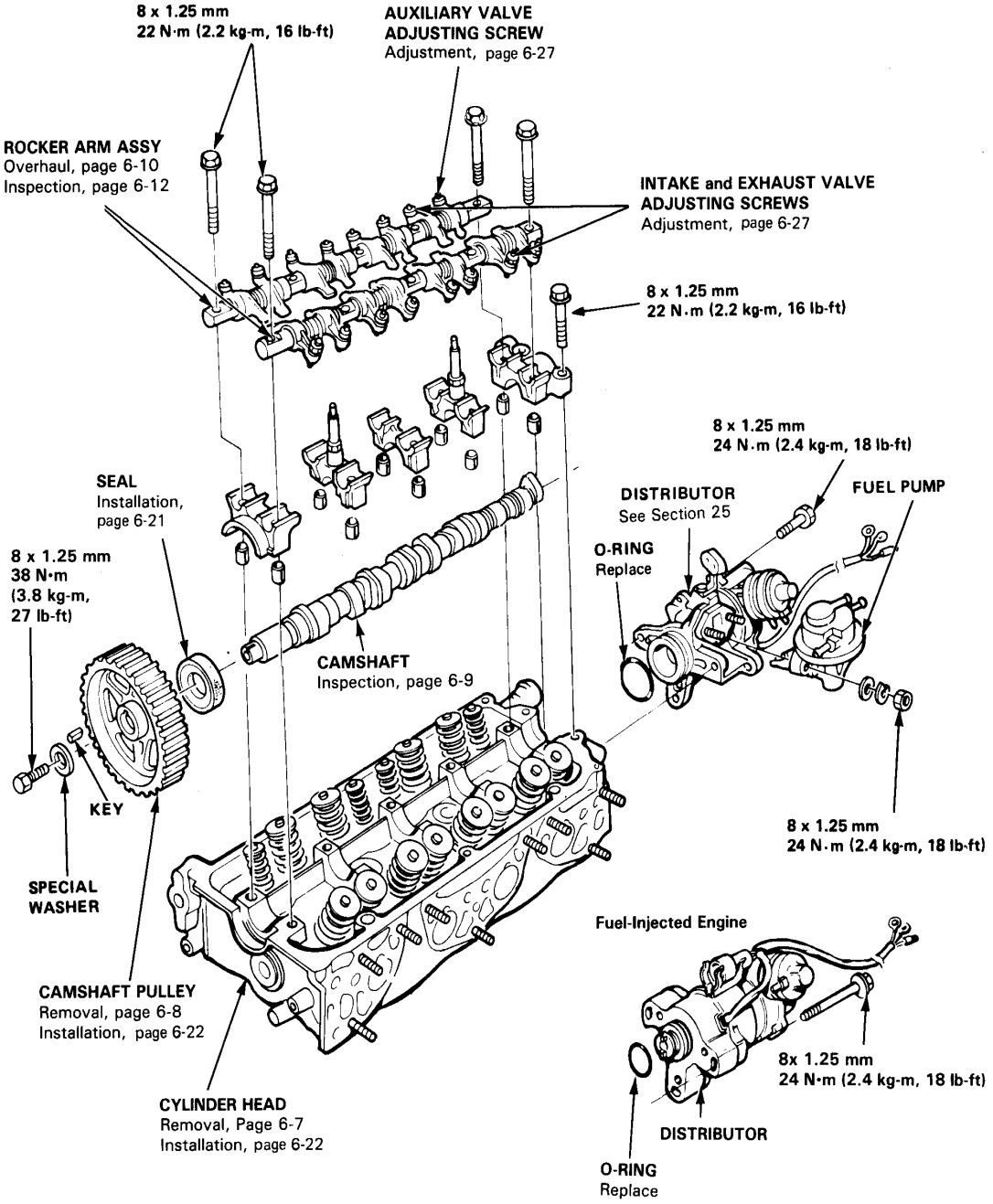

Carbureted Engine

(1500 shown; 1300 similar)

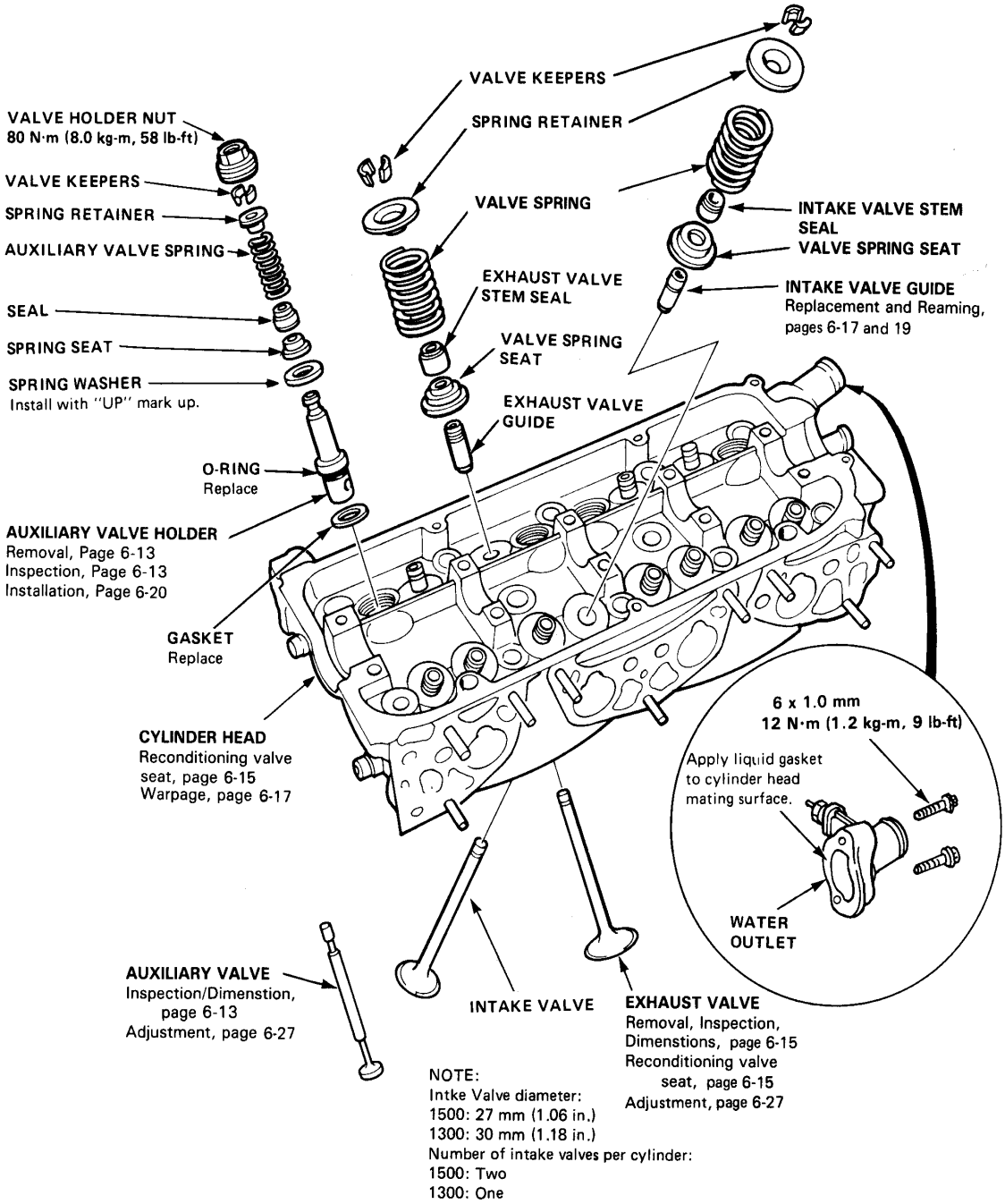

(cont'd)

Cylinder Head/Valve Train

Illustrated Index (cont'd)

Fuel-Injected Engine

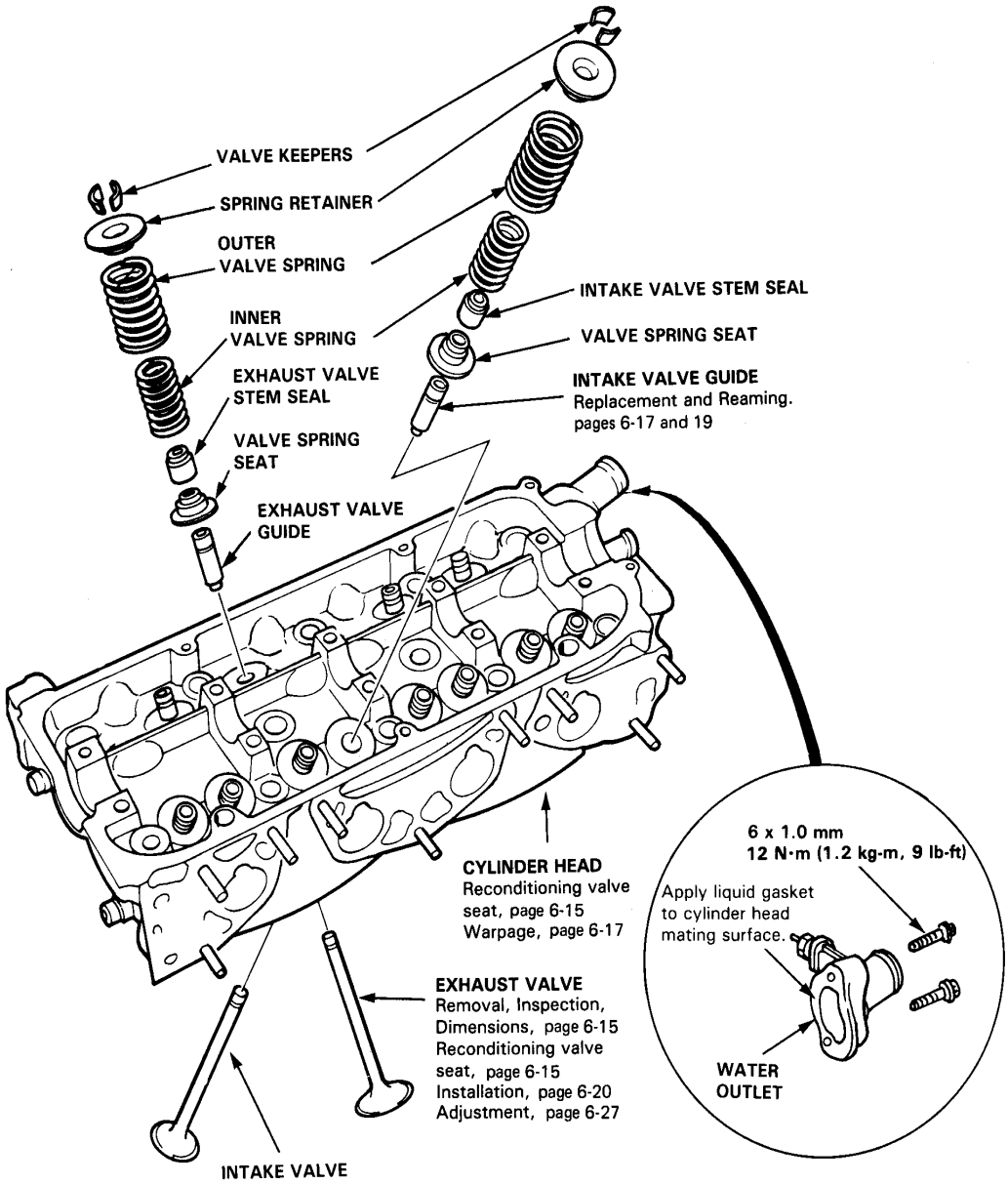

Cylinder Head

Removal (engine removal not required)

CAUTION: Do not remove the cylinder head until the coolant temperature drops below 38°C (100°F).

NOTE:
- Inspect the timing belt before removing the cylinder head.
- Before removal of the cylinder head, turn the flywheel so that the No. 1 cylinder is at topdead-center (page 6-25).
- Mark all emissions hoses before disconnecting them.

1. Disconnect the negative terminal from the battery.
2. Drain the cooling system.
3. Disconnect the air intake duct and vacuum hose (page 5-5).
4. Remove the air cleaner cover.
5. Remove the brake booser vacuum tube from the intake manifold.
6. Remove the engine secondary ground cable from the valve cover.
7. Disconnect the electrical wires from the fuel cut-off solenoid valve, automatic choke and thermosenser. For carbureted engines, go to step 16, for fuel-injected engine only, follow steps 8 through 15.
8. Relieve fuel pressure.

WARNING Do not smoke while working on fuel system, keep open flame or spark away from work area.

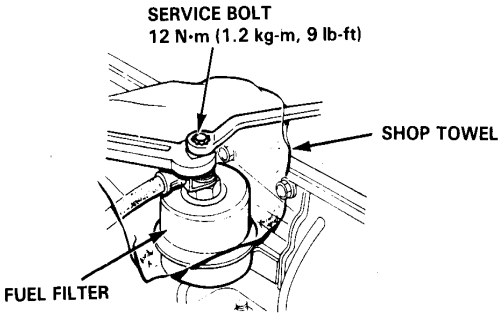

9. Disconnect the fuel hose and fuel return hose (page 5-3).
10. Disconnect the throttle cable at the throttle body (page 5-4).
11. Remove the spark plug caps from the spark plugs, then remove the distributor assembly (page 5-4).
12. Disconnect the hoses from the charcoal canister.
13. Disconnect the No. 1 control box emission hoses from the tubing manifold.
14. Disconnect the engine sub harness connectors and couplers from the cylinder head and intake manifold;
    - Four injector couplers
    - TA sensor connector
    - TW sensor connector
    - Ground terminals
    - Throttle sensor connector
    - Crankshaft angle sensor coupler.
15. Disconnect the oxygen sensor coupler. For fuel-injected engines, go to step 22.
16. Disconnect the fuel lines.

WARNING Do not smoke while working on fuel system. Keep open flame or spark away from work area.

17. Remove the spark plug caps from the spark plugs, then remove the distributor assembly (page 5-5).
18. Disconnect the throttle cable at the carburetor.
19. Disconnect the hoses from the charcoal canister.
20. Disconnect the No. 1 control box emission hoses from the tubing manifold.
21. On CAL/HI ALT cars, disconnect the air jet controller hoses.
22. On cars equipped with air conditioning, disconnect the idle control solenoid hoses.
23. Disconnect the upper radiator hose, heater inlet hose, and bypass inlet hose from the cylinder head (page 5-9).
24. Remove the hose between the thermostat housing and the intake manifold.
25. Remove the bolts attaching the exhaust manifold and bracket, then remove the manifold.
26. Remove the bolts attaching the intake manifold and bracket.
27. Disconnect the hose from the intake manifold to the breather chamber.
28. Remove the valve cover and the timing belt upper cover.

(cont'd)

Cylinder Head

Removal (engine removal not required)

29. Loosen the tensioner adjustment bolt, then remove the timing belt.

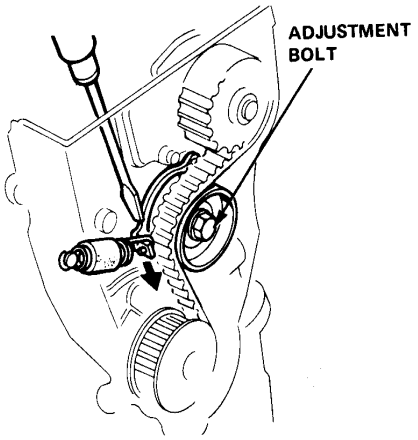

CAUTION: Do not crimp or bend timing belt more than 90° or less than 25 mm (1 in.) in diameter.

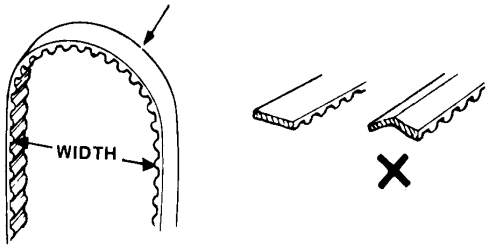

30. Remove the cylinder head bolts, then remove the cylinder head.

CAUTION: To prevent warpage, unscrew bolts 1/3 turn each time and repeat sequence until loose.

31. Remove the exhaust manifold from the cylinder head.

Camshaft Pulley

Removal

1. To ease reassembly, turn the pulley until the "UP" mark faces up, and the front timing mark is aligned with the valve cover surface.

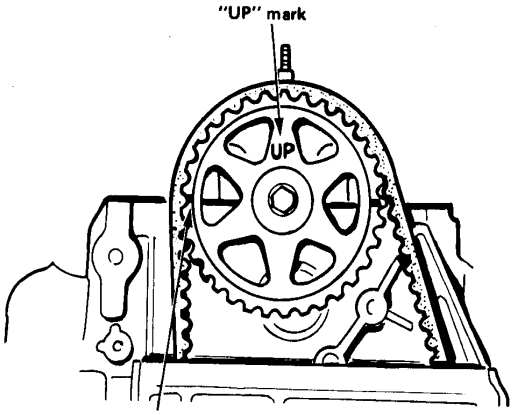

Front timing mark on pulley aligned with the valve cover surface.

2. Remove the pulley retaining bolt and washer, then remove the pulley.

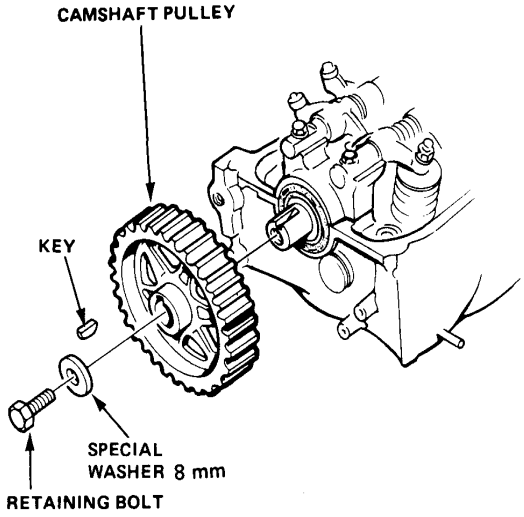

NOTE: Before removing rocker arm assembly, check camshaft end play.

Camshaft

Inspection

NOTE: Do not rotate camshaft during inspection; loosen the adjusting screws before starting.

1. Seat camshaft by prying it toward distributor end of head with screwdriver.

2. Zero dial indicator against end of distributor drive, then pry camshaft back toward it, and read end play.

Camshaft End Play:
Standard (New): 0.05—0.15 mm (0.002—0.006 in.)
Service Limit: 0.5 mm (0.02 in.)

Unscrew the adjusting screws

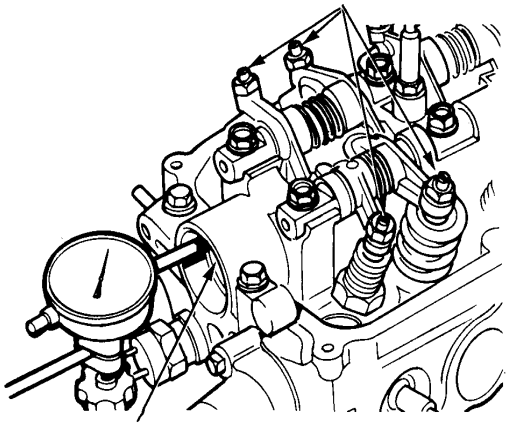

CAMSHAFT

3. Remove the rocker arm bolts, then remove the rocker assembly from the cylinder head.

NOTE: Unscrew the rocker arm bolts, two turns at a time, in a criss-cross pattern, to prevent damaging valves or rocker assembly.

- Lift camshaft out of cylinder head, wipe clean, then inspect lift ramps. Replace camshaft if lobes are pitted, scored, or excessively worn.
- Clean the camshaft bearing surfaces in the cylinder head, then set camshaft back in place.
- Insert plastigage strip across each journal.
- Install the rocker arm assembly and torque bolts to values and in sequence shown on page 6-22. then remove the bolts and the rocker arm assembly.

4. Measure widest portion of plastigage on each journal.

Camshaft Bearing Radial Clearance:
Standard (New): 0.050—0.089 mm (0.002—0.004 in.)
Service Limit: 0.15 mm (0.006 in.)

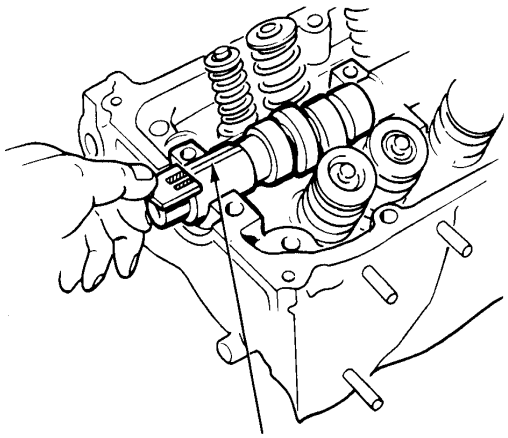

PLASTIGAGE

5. If camshaft bearing radial clearance is out of tolerance:

- And camshaft has already been replaced, you must replace the cylinder head.
- If camshaft has not been replaced, first check total runout with the camshaft supported on V-blocks.

Camshaft Total Runout:
Standard (New): 0.03 mm (0.001 in.)
Service Limit: 0.06 mm (0.002 in.)

Rotate camshaft while measuring

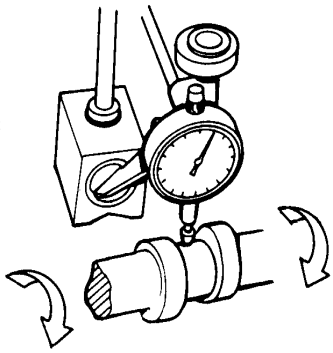

— If the total runout of the camshaft is within tolerance, replace the cylinder head.

— If the total runout is out of tolerance replace the camshaft and recheck. If the bearing clearance is still out of tolerance, replace the cylinder head.

Rocker Arms

Overhaul

Carbureted Engine

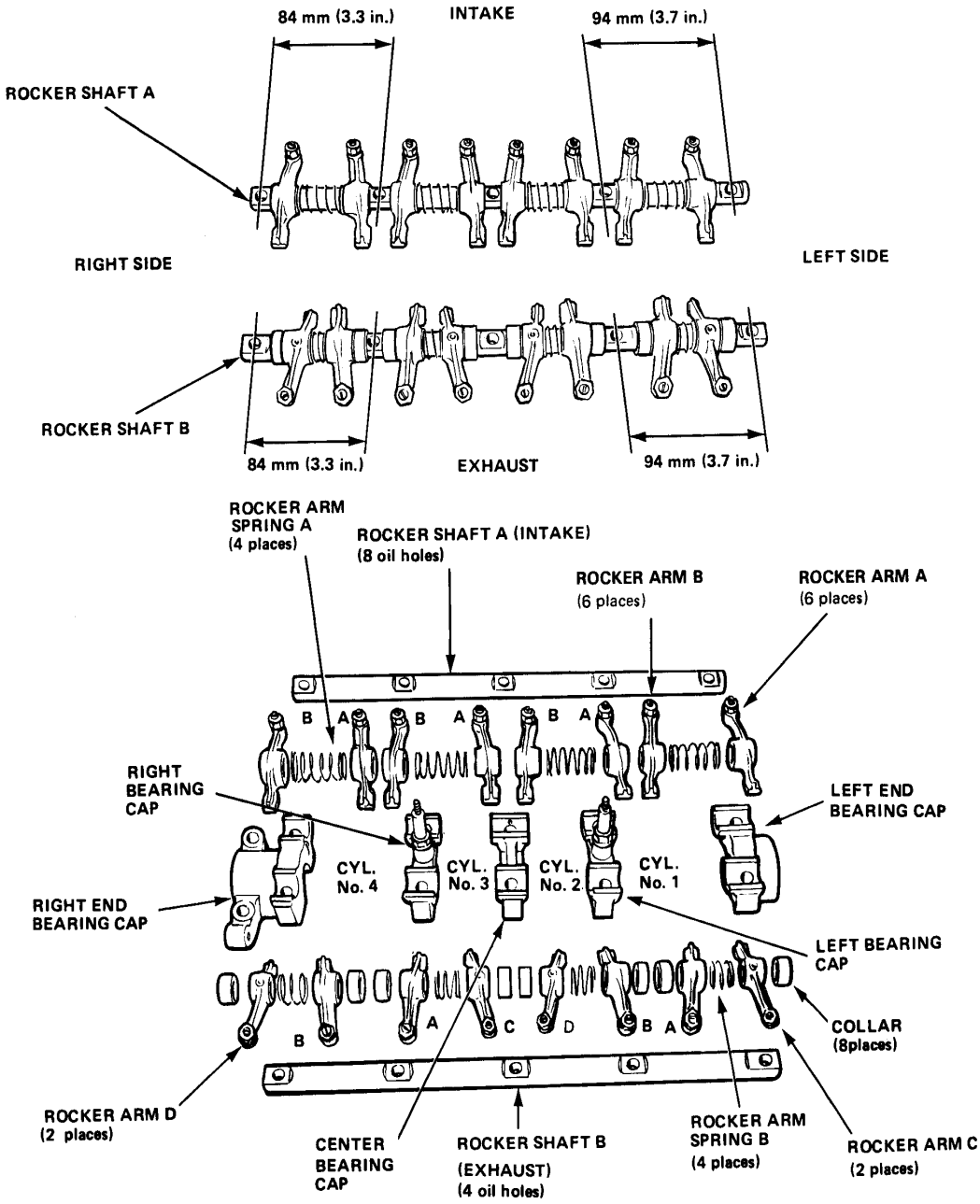

NOTE:
- Identify parts as they are removed to ensure reinstallation in original locations.
- Inspect rocker shaft and rocker arms (page 6-12).
- Rocker arms must be installed in the same position if reused.

Fuel-Injected Engine

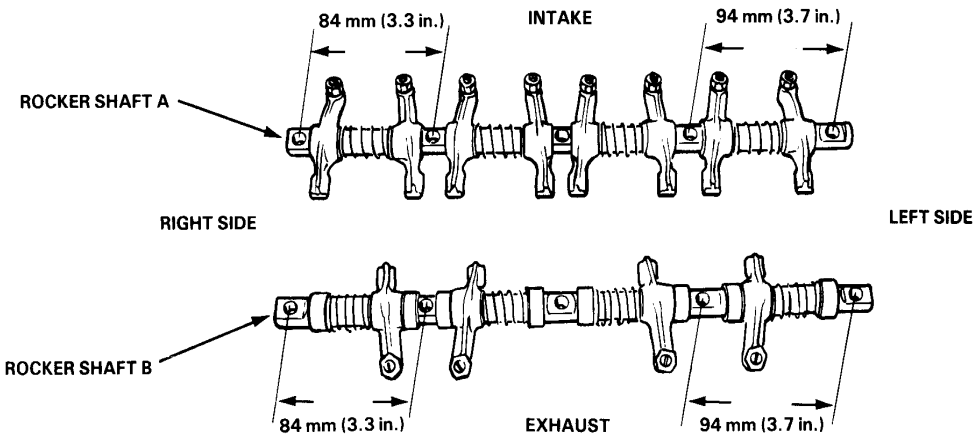

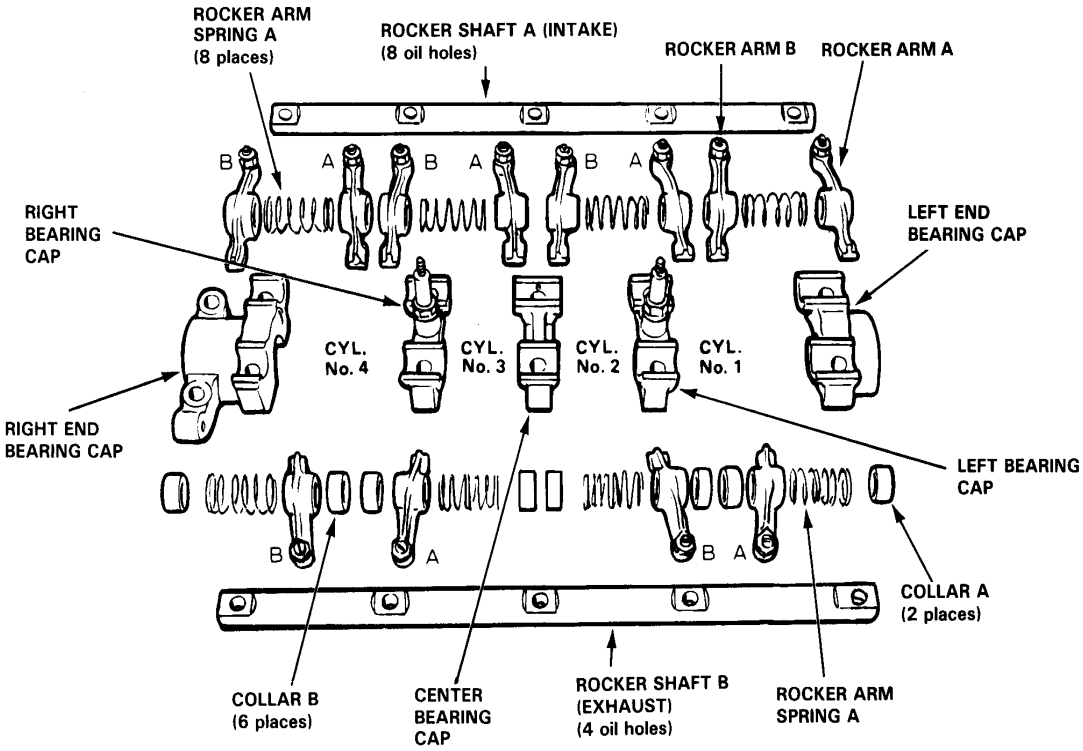

NOTE:

- Identify parts as they are removed to ensure reinstallation in original locations.
- Inspect rocker shaft and rocker arms (page 6-12).
- Rocker arms must be installed in the same position if reused.

Rocker Arms

Clearance

Measure both the intake/exhaust rocker shaft and auxiliary rocker shaft.

1. Measure diameter of shaft at first rocker location.

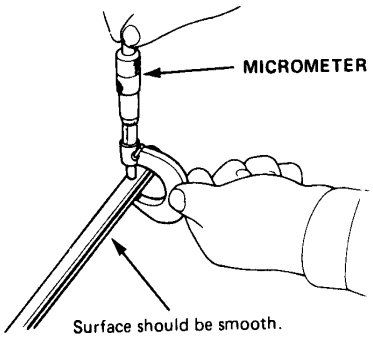

2. Zero gauge to shaft diameter.

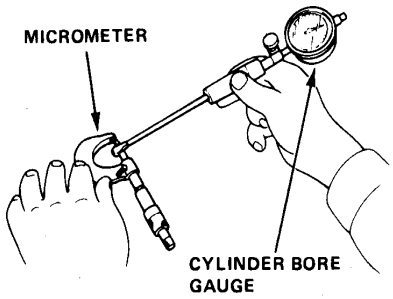

3. Measure inside diameter of rocker arm and check for out-of-round condition.

Rocker Arm Radial Clearance:
Service Limit: 0.08 mm (0.003 in.)

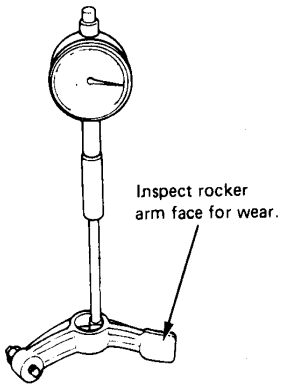

Repeat for all rockers. If over limit, replace rocker shaft and all over-tolerance rocker arms.

Auxiliary Valve

Removal

Carbureted Engine

1. Remove the valve holder nut using special tool.

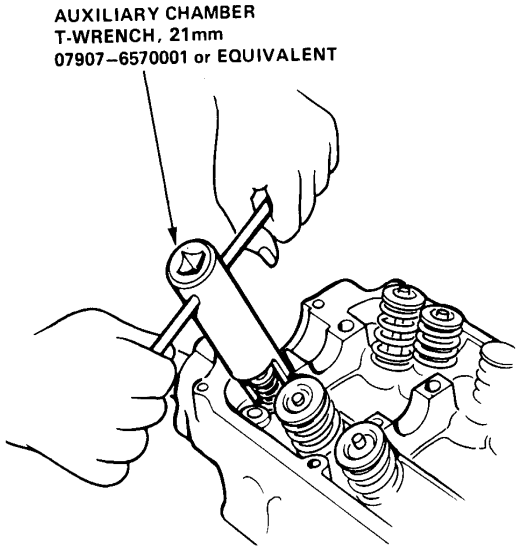

2. Remove the valve holder assembly using special tool.

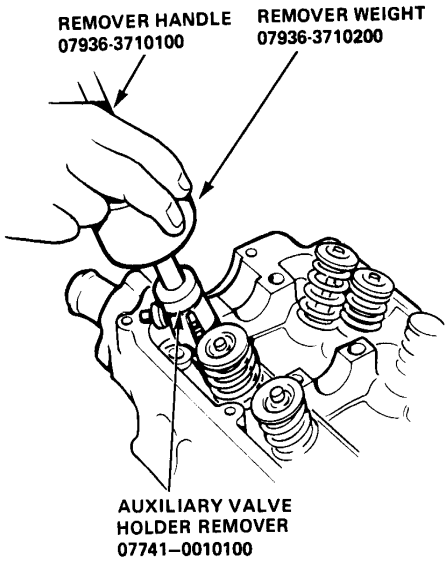

Disassembly

Carbureted Engine

NOTE: Identify valves and springs as they are removed so that each item can be reinstalled in its original position.

1. Compress spring and remove the valve keepers.
2. Remove the valve from the holder.
3. Remove the O-ring from the holder. This O-ring must be replaced with new O-ring during reassembly.

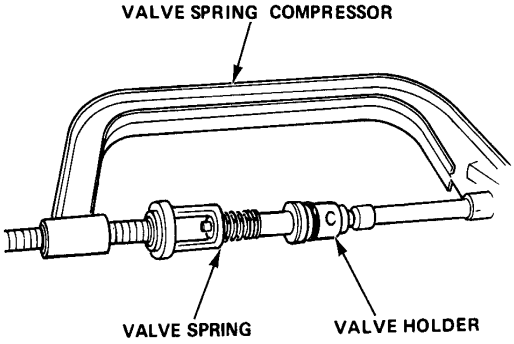

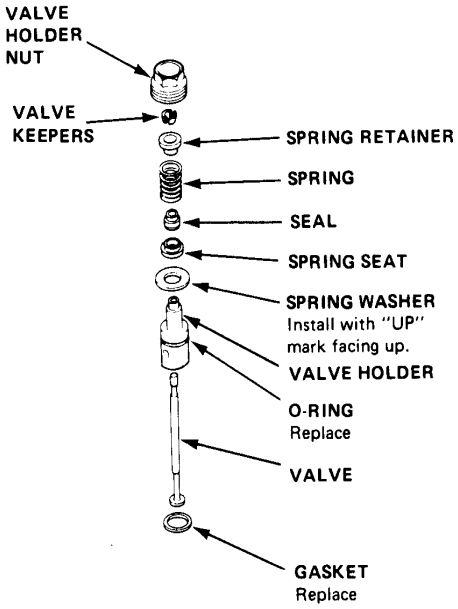

Inspection

Carbureted Engine

Valve Dimensions
A Standard (New): 11.9—12.1 mm (0.47—0.48 in.)
B Standard (New): 88.9—89.3 mm (3.500—3.516 in.)
C Standard (New): 6.572—6.587 mm (0.2587—0.2593 in.)
C Service Limit: 6.54 mm (0.257 in.)
D Standard (New): 2.3—2.7 mm (0.09—0.11 in.)

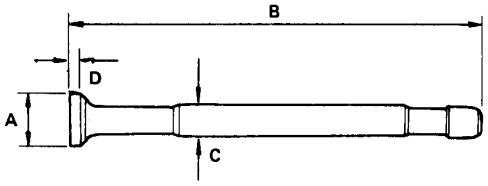

Valve holder I.D.
Standard (New): 6.61—6.63 mm (0.260—0.261 in.)
Service Limit: 6.65 mm (0.262 in.)

Valve Holder-to-Stem Clearance
Standard (New): 0.023—0.058 mm (0.001—0.002 in.)
Service Limit: 0.08 mm (0.003 in.)

NOTE: If valve holder-to-stem clearance exceeds service limit, replace valve assembly.

Valve Seat Width
Standard (New): 0.353—0.494 mm (0.014—0.019 in.)
Service Limit: 1.0 mm (0.04 in.)

NOTE: If valve seat width exceeds service limit, replace valve and valve holder as a set.

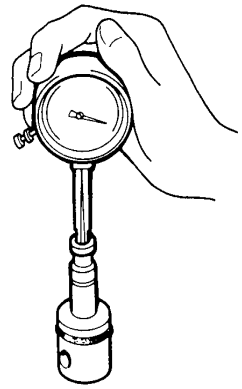

NOTE: Measure against thrust side.

Valve Springs and Valve Seals

Replacement (Cylinder head removal not required)

NOTE: This procedure requires a commercially-available value spring compressor. A typical style is illustrated.

1. Remove the valve cover.
2. Remove the rocker arm assembly.

   NOTE: Air suction pipe and valve should be removed for removing intake valve seals.

   - Temporarily install an old rocker arm shaft (no rockers, no springs, no collars) to serve as a leverage support for the tool.
   - Don't use the shaft removed from the engine, because you could scratch or bend it.
   - Install the tool.

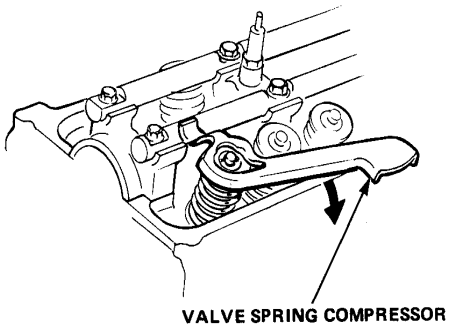

3. With the piston at TDC insert a spark plug air hold fitting to keep the valves closed and allow spring compression while you remove the valve keepers.
4. Remove the tool and springs.
5. Remove the valve seal.
6. Install the valve seals and springs in reverse order of removal.

   NOTE:
   - Exhaust and intake seals are not interchangeable.

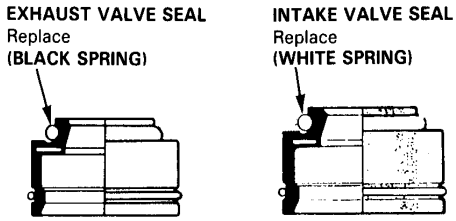

- Place the valve springs with closely wound coils or painted part toward the cylinder head.

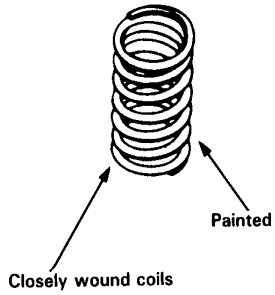

When springs are in place, lightly tap the end of each valve stem two or three times with a plastic mallet to ensure proper seating of valve and valve keepers.

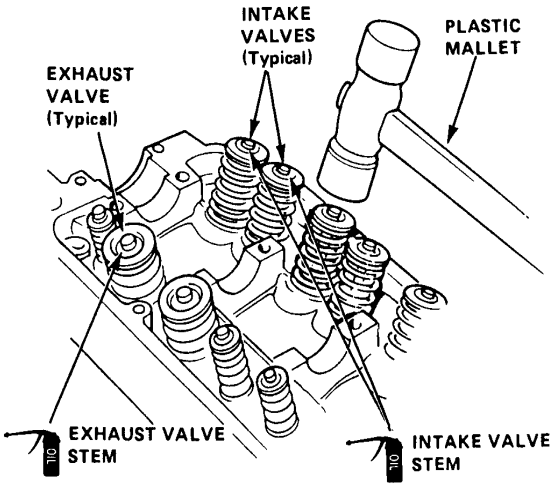

Intake and Exhaust Valves

Replacement

NOTE: Identify valves and valve springs as they are removed so that each item can be reinstalled in its original position.

1. Tap each valve stem with a plastic mallet to loosen valve keepers before installing spring compressor.

2. Install spring compressor. Compress spring and remove valve keepers.

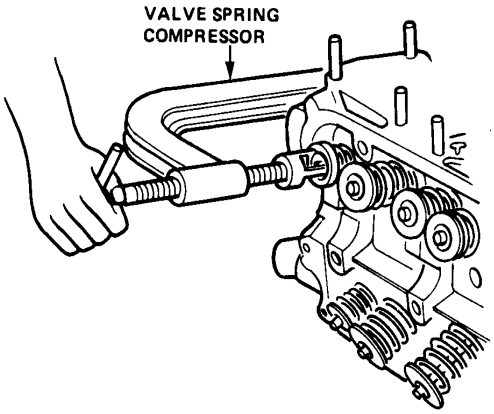

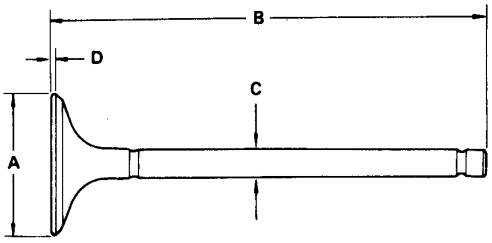

Intake Valve Dimensions
A Standard (New):
1500: 26.9–27.1 mm (1.059–1.067 in.)
1300: 29.9–30.1 mm (1.177–1.185 in.)
B Standard (New): 112.56–112.86 mm (4.431–4.443 in.)
C Standard (New): 6.58–6.59 mm (0.2591–0.2594 in.)
C Service Limit: 6.55 mm (0.258 in.)
D Standard (New): 1.05–1.35 mm (0.041–0.053 in.)
D Service Limit: 1.00 mm (0.039 in.)

Exhaust Valve Dimensions
A Standard (New):
Carbureted: 28.9–29.1 mm (1.138–1.146 in.)
Fuel-Injected: 32.9–33.1 mm (1.295–1.303 in.)
B Standard (New): 113.66–113.96 mm (4.475–4.487 in.)
C Standard (New): 6.55–6.56 mm (0.2579–0.2583 in.)
C Service Limit: 6.52 mm (0.257 in.)
D Standard (New): 1.65–1.95 mm (0.065–0.077 in.)
D Service Limit: 1.45 mm (0.057 in.)

Valve Seat

Reconditioning

1. Renew the valve seats in the cylinder head using a valve seat grinder.

   NOTE: If guides are worn (page 6-16), replace them (page 6-17) before grining valve seats.

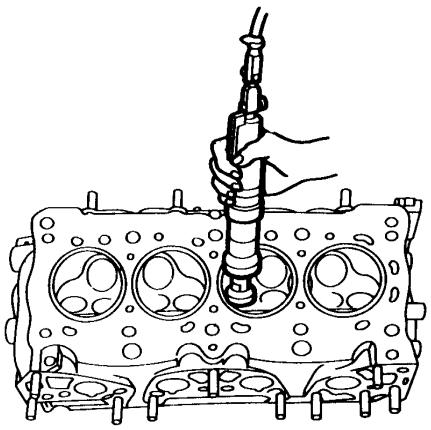

2. Carefully grind a 45° seat, removing only enough material to ensure a smooth and concentric seat.

3. Bevel the upper edge of seat with the 30° stone and the lower edge of seat with the 60° stone. Check width of seat and adjust accordingly.

4. Make one more very light pass with the 45° stone to remove any possible burrs caused by the other stones.

Valve Seat Width:
Standard: 1.25–1.55 mm (0.049–0.061 in.)
Service Limit: 2.0 mm (0.08 in.)

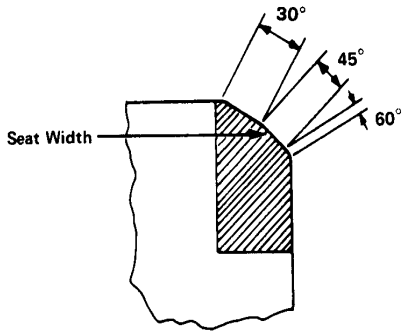

(cont'd)

Valve Seat Reconditioning (cont'd)

5. After resurfacing seat, inspect for even valve seating: Apply Prussian blue compound to valve face, and insert valve in original location in head, then lift it and snap it closed against seat several times.

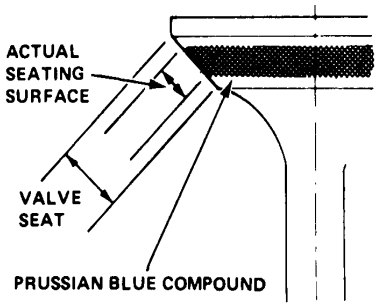

6. The actual valve seating surface, as shown by the blue compound, should be centered on the seat.
   - If it is too high (closer to the valve stem), you must make a second cut with the 60° stone to move it down, then one more cut with the 45° cutter to restore seat width.
   - If it is too low (closer to valve edge), you must make a second cut with the 30° stone to move it up, then one more cut with the 45° stone to restore seat width.
     NOTE: The final cut should always be made with the 45° stone.

7. Insert intake and exhaust valves in head and measure valve stem installed height.
   Intake Valve Stem Installed Height:
   Standard (New): 48.16 mm (1.896 in.)
   Service Limit: 48.95 mm (1.927 in.)
   Exhaust Valve Stem Installed Height:
   Standard (New): 48.16 mm (1.896 in.)
   Service Limit: 48.95 mm (1.927 in.)

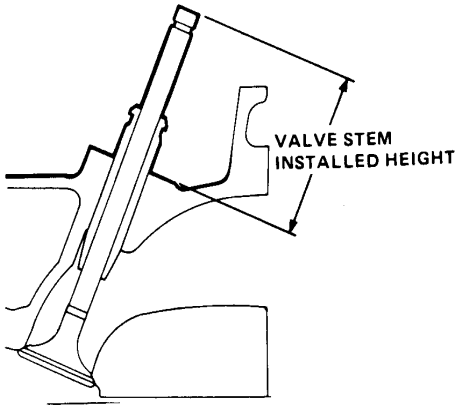

8. If valve stem installed height is over service limit, replace valve and recheck. If still over service limit, replace cylinder head; the valve seat in the head is too deep.

Valve Guide-to-Valve Stem Clearance

1. Measure the guide-to-stem clearance with a dial indicator while rocking the stem in the direction of normal thrust (wobble method).

Intake Valve Stem-to-Guide Clearance
Standard (New): 0.04—0.10 mm (0.002—0.004 in.)
Service Limit: 0.16 mm (0.006 in.)

Exhaust Valve Stem-to-Guide Clearance
Standard (New): 0.10—0.16 mm (0.004—0.006 in.)
Service Limit: 0.22 mm (0.09 in.)

Valve extended 10 mm out from seat.

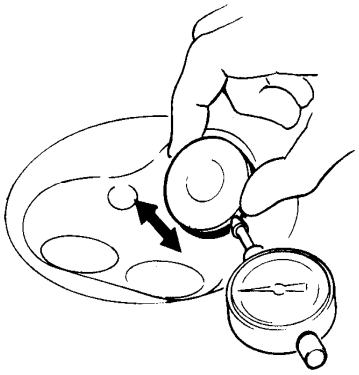

- If measurement exceeds the service limit, recheck using new valve.
- If measurement is now within service limit. reassemble using new valve.
- If measurement still exceeds limit, recheck using alternate method below, then replace valve and guide, if necessary.

NOTE: An alternate method of checking guide to stem clearance is to subtract the O.D. of the valve stem, measured with a micrometer, from the I.D. of the valve guide, measured with an inside micrometer or ball gauge.
Take the measurements in three places along the valve stem and three places inside the valve guide. The difference between the largest guide measurement and the smallest stem measurement should not exceed the service limit

Intake Valve Stem-to Guide Clearance
Standard (New): 0.02—0.05 mm (0.001—0.002 in.)
Service Limit: 0.08 mm (0.003 in.)
Exhaust Valve Stem-to-Guide Clearance
Standard (New): 0.05—0.08 mm (0.002—0.003 in.)
Service Limit: 0.11 mm (0.004 in.)

Cylinder Head

Warpage

NOTE: If camshaft bearing clearances are not within specification, the head cannot be resurfaced (page 6-6).

If camshaft bearing radial clearances are within specifications, check head for warpage.

- If warpage is less than 0.05 mm (0.002 in.) cylinder head resurfacing is not required.
- If warpage is between 0.05 mm (0.002 in.) and 0.2 mm (0.008 in.), resurface cylinder head.
- Maximum resurface limit is 0.2 mm (0.008 in.) based on height of 90.0 mm (3.54 in.)

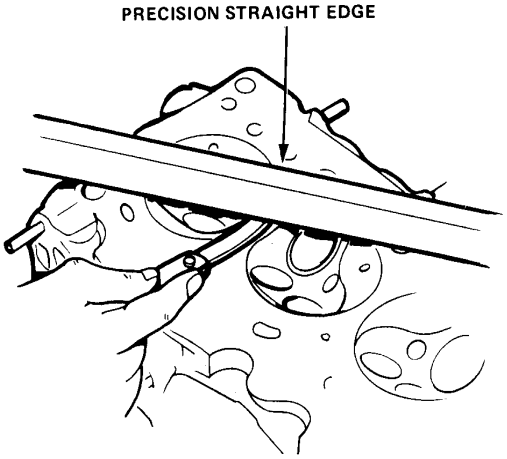

Cylinder Head Height:

New:	**90.0 mm (3.54 in.)**
Service Limit:	**89.8 mm (3.53 in.)**

Measure along edges, and 3 ways across center.

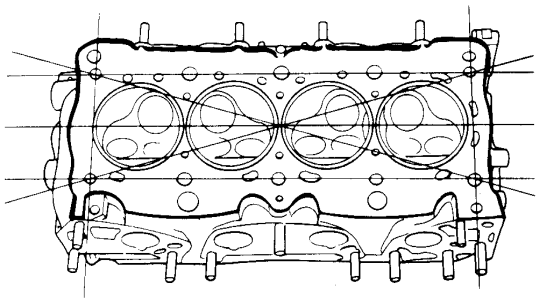

Valve Guide

Replacement

1. As illustrated, the removal steps of this procedure use a commercially–available air-impact driver attachment witch may need to be modified to fit the diameters of Honda guides. In most cases, the same procedure can be done using Honda Valve Guide Drivers and a conventional hammer. See tool numbers at the end of this procedure.

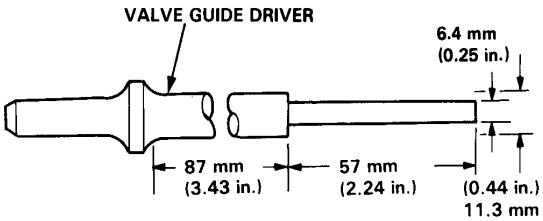

2. Select the proper replacement guides and chill them in the freezer section of a refrigerator for about an hour.

3. Use a hot plate or oven to evenly heat the cylinder head to 150°C (300°F). Check temperature with a cooking thermometer.

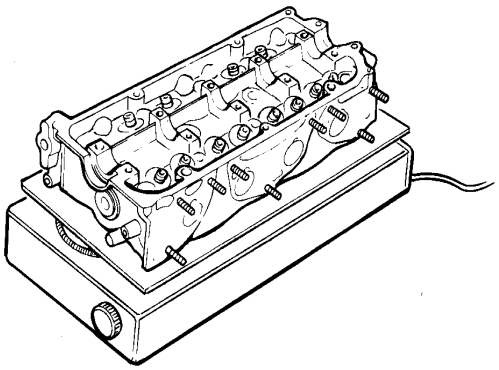

CAUTION:

- **Do not use a torch; it may warp the head.**
- **Do not get the head hotter than 150°C (300°F); excessive heat may loosen the valve seats.**
- **To avoid burns, use heavy gloves when handling the heated cylinder head.**

(cont'd)

Valve Guide

Replacement (cont'd)

4. First use the driver and an air hammer from the camshaft side to drive the guide about 2 mm towards the combustion chamber. This will knock off some of the carbon and make removal easier.

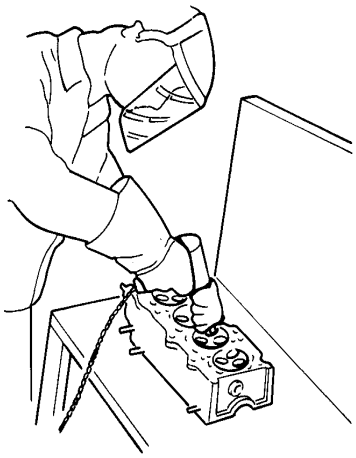

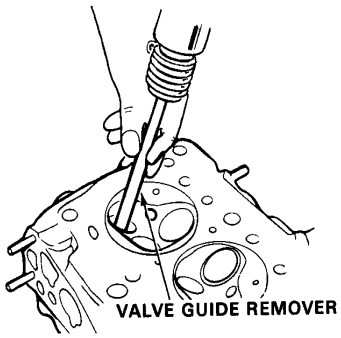

CAUTION:
- **Always wear safety goggles or a face shield when using the air hammer.**
- **Hold the air hammer directly in line with the valve guide to prevent damaging the driver.**

5. Turn the head over and drive out the guide toward the camshaft side of head.

   If a valve guide still won't move, drill it out with a 5/16 inch bit, then try again.

   CAUTION: Drill guides only in extreme cases: you could damage the cylinder head if the guide breaks.

6. Remove the new guide(s) from the refrigerator, one at a time, as you need them.

7. Slip a 6 mm steel washer and the correct driver attachment over the end of the driver (The washer will absorb some of the impact and extend the life of the driver).

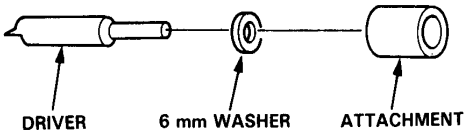

8. Then install the new guide(s) from the camshaft side of the head; drive each one in until the attachment bottoms on the head. If you have all twelve guides to do, you may have to reheat the head one or two times.

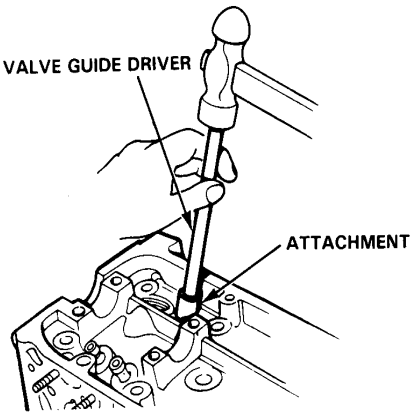

Intake: 17.5mm (0.69 in.)
Exhaust: 16.0 mm (0.63 in.)

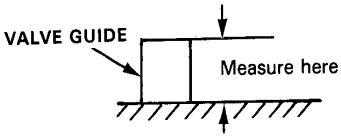

NOTE: Valve guide replacement can be performed with the special tools below.

Removal
VALVE GUIDE REMOVER, 6.6 mm
07942—6570100 or 07942—61110000

Valve Guide and Valve Spring

Valve Guide Reaming

NOTE: For new valve guides only.

1. Coat reamer and valve guide with cutting oil.
2. Rotate reamer clockwise the full length of the valve guide bore.
3. Continue to rotate reamer clockwise while removing.
4. Thoroughly wash the guide in detergent and water to remove any cutting residue.
5. Check clearance with valve (page 6-16).

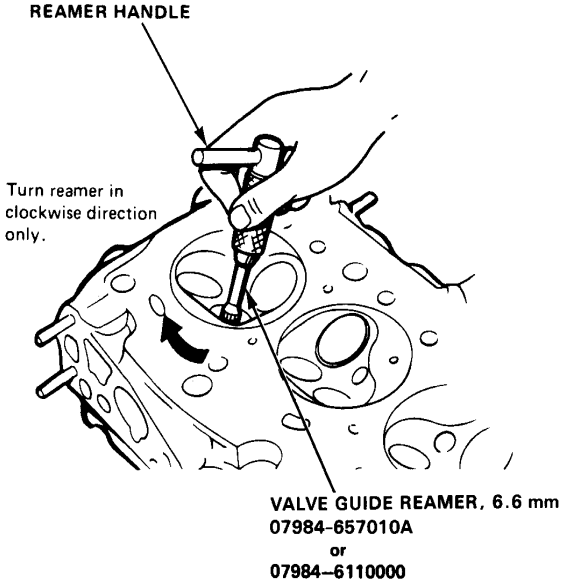

Valve Spring Installation Sequence

NOTE: Exhaust and intake valve guide seals are NOT interchangeable.

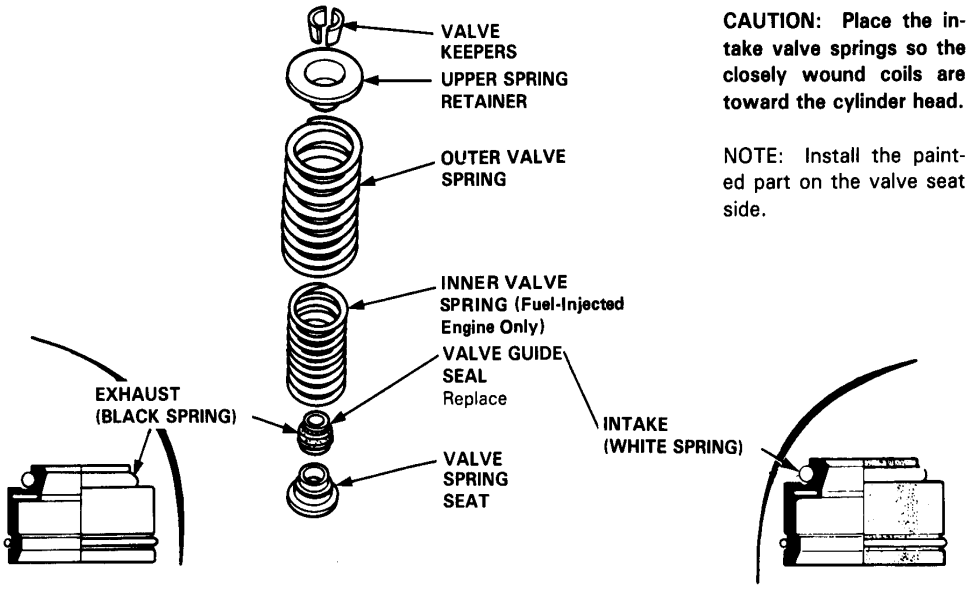

CAUTION: Place the intake valve springs so the closely wound coils are toward the cylinder head.

NOTE: Install the painted part on the valve seat side.

Intake and Exhaust Valves

Installation

When installing valves in cylinder head, coat valve stems with oil before inserting into valve guides, and make sure valves move up and down smoothly.

When valves and springs are in place, lightly tap the end of each valve stem two or three times to ensure proper seating of valve and valve keepers (use plastic mallet).

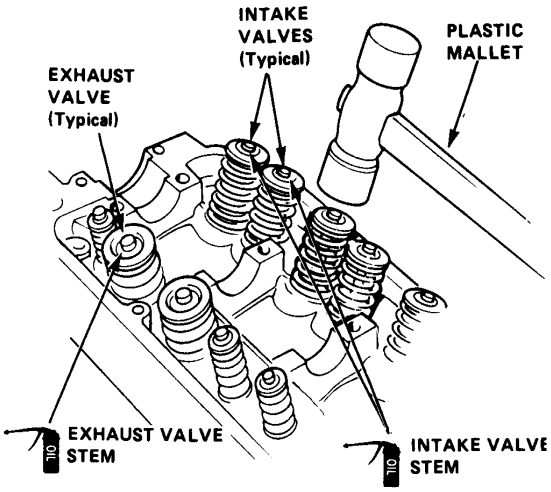

Auxiliary Valve

Installation

Carbureted Engine

Install the chamber using a new gasket.

1. Coat locknut threads and O-ring with molylube.
2. Align dowel pin with cylinder head groove.

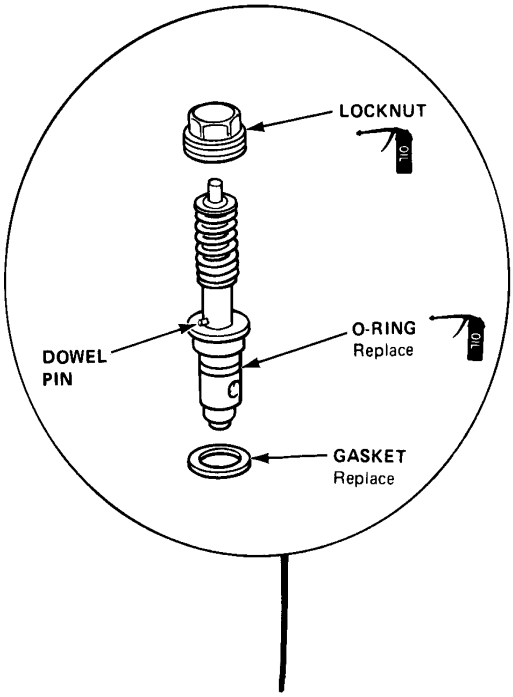

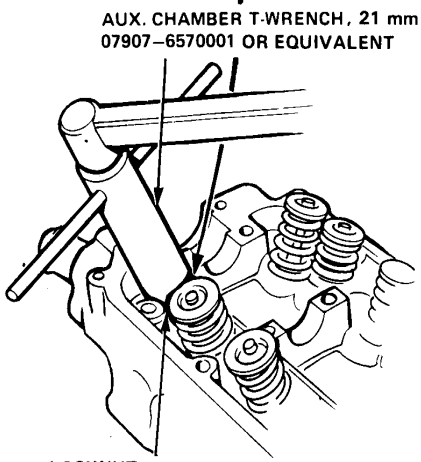

Cam/Rocker Arm and Camshaft Seal/Pulley

Installation

CAUTION:
- **Make sure that all rockers are in alignment with valves when torquing rocker assembly bolts.**
- **Valve locknuts should be loosened and adjusting screws backed off before installation.**

1. After wiping down cam and journals in cylinder head, lubricate both surfaces and install camshaft.
2. Turn camshaft until its keyway is facing up. (No. 1 cylinder TDC).
3. Install the camshaft seal with the open side (spring) facing in.

OIL Lubricate cam lobes after reassembly.

4. Apply liquid gasket to the head mating surfaces of the No. 1 and 5 camshaft holders, and place them on top of the cylinder along with the No. 2,3 and 4.

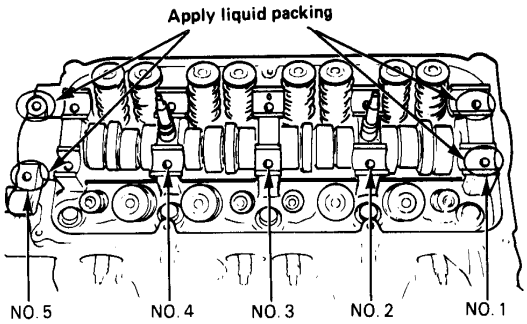

5. Temporarily assemble the rocker arms.
   To ease assembly, use rubber bands to hold the rocker arms in position.

Carbureted Engine

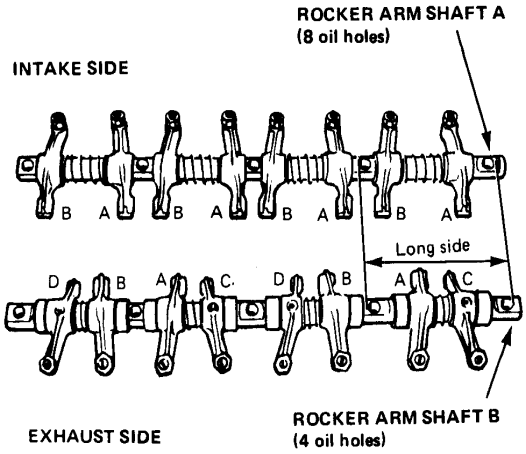

Fuel-Injected Engine

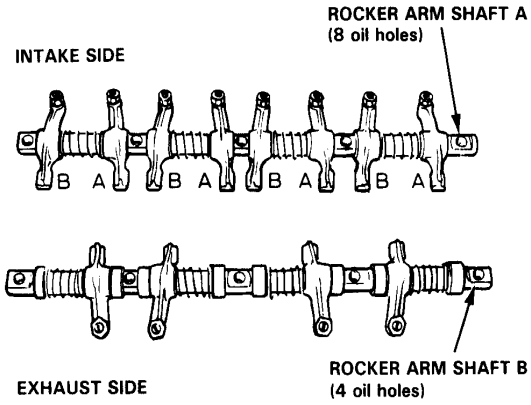

6. Set rocker arm assembly in place, loosely install the bolts, then remove the rubber bands.

   NOTE: Do not allow the collars to ride over the camshaft holders.

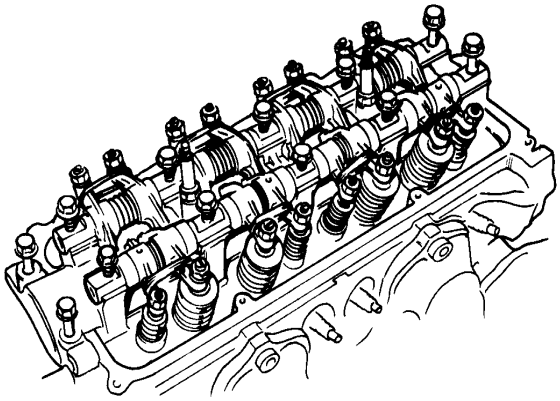

7. Press in the camshaft seal securely with the special tool.

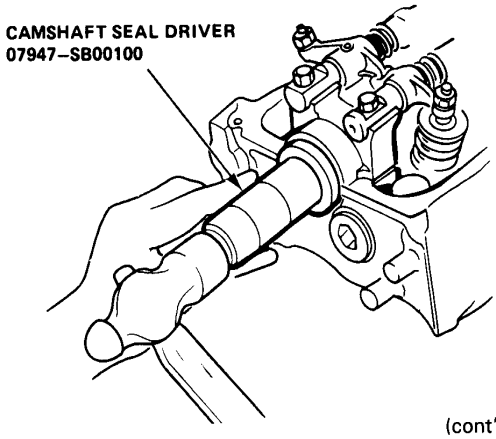

(cont'd)

Cam/Rocker Arm and Camshaft Seal/Pulley

Installation (cont'd)

8. Tighten each bolt two turns at a time in the sequence shown below to insure that the rockers do not bind on the valves.

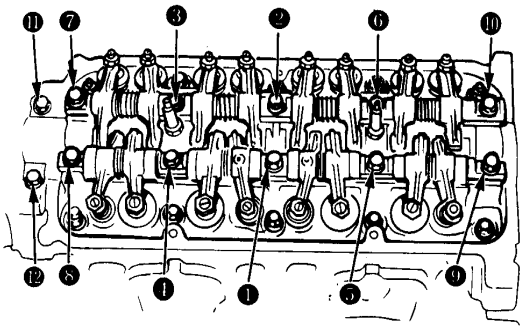

8 x 1.25 mm
22 N·m
(2.2 kg-m, 16 lb-ft)

9. Install key into groove in camshaft.

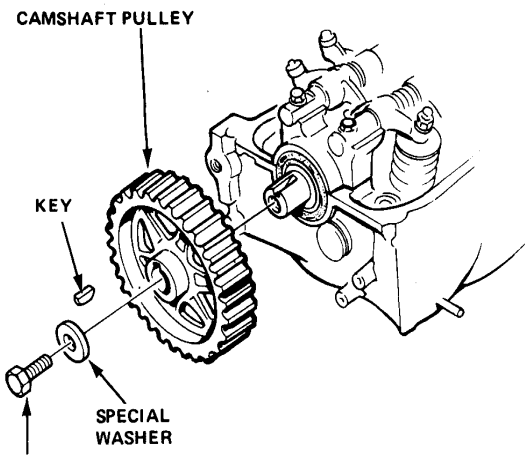

RETAINING BOLT
8 x 1.25 mm
38 N·m
(3.8 kg-m, 27 lb-ft)

10. Push camshaft pulley onto camshaft, then tighten retaining bolt to torque shown.

Cylinder Head

Installation

1. Install the cylinder head in reverse order of removal:

   - Always use a new head gasket.
   - Cylinder head and engine block surface must be clean.
   - "UP" mark on timing belt pulley should be at the top.

2. Install the intake manifold and tighten the nuts in a criss-cross pattern in 2 or 3 steps, beginning with the inner nuts.

Carbureted Engine

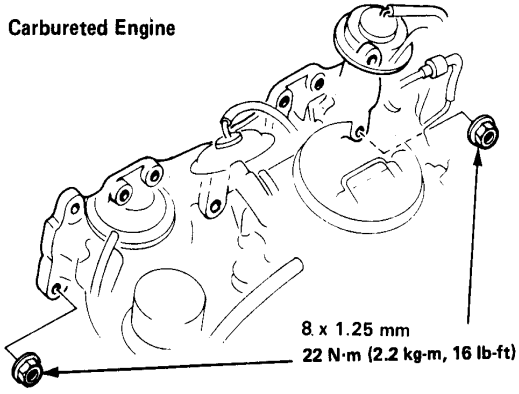

Fuel-Injected Engine

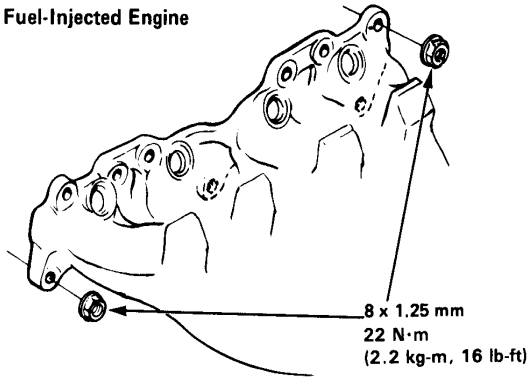

NOTE: Cylinder head dowel pins and oil control jet must be aligned.

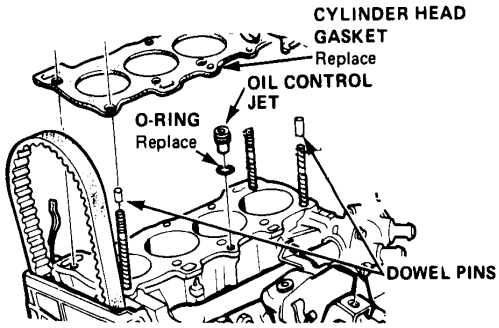

3. Install the exhaust manifold and bracket.

Carbureted Engine

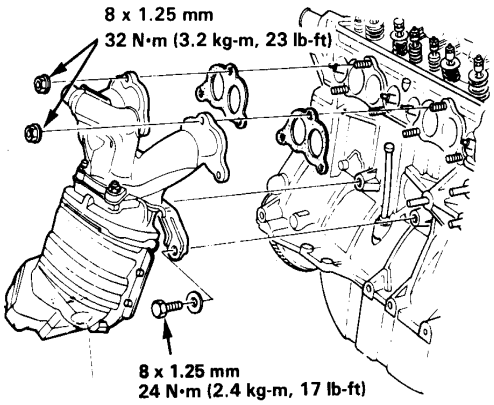

Fuel-Injected Engine

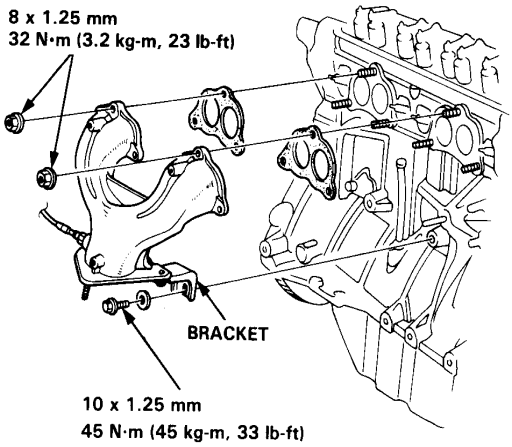

4. Adjust the valve timing (page 6-25).

5. Tighten cylinder head bolts and nuts in two steps. In the first step tighten all bolts and nuts, in sequence, to about 30 N·m (3.0 kg-m, 22 lb-ft); in the final step tighten, in same sequence, to 60 N·m (60 kg-m, 43 lb-ft).

CYLINDER HEAD TORQUE SEQUENCE

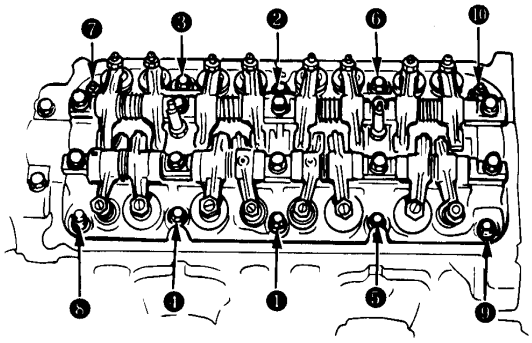

6. 1300: Tighten the valve cover bolts two turns at time in the sequence shown below.

VALVE COVER TORQUE SEQUENCE (1300)

6 x 1.0 mm
12 N·m (1.2 kg-m, 9 lb-ft)

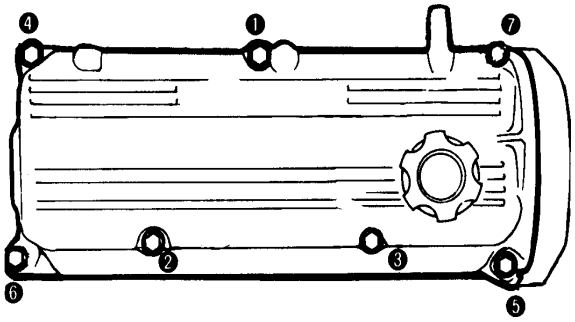

7. After installation, check that all tubes, hoses and connectors are installed correctly.

Timing Belt

Replacement

NOTE:
- Refer to next page for positioning crank and pulley before installing belt.
- Mark direction of rotation before removing.

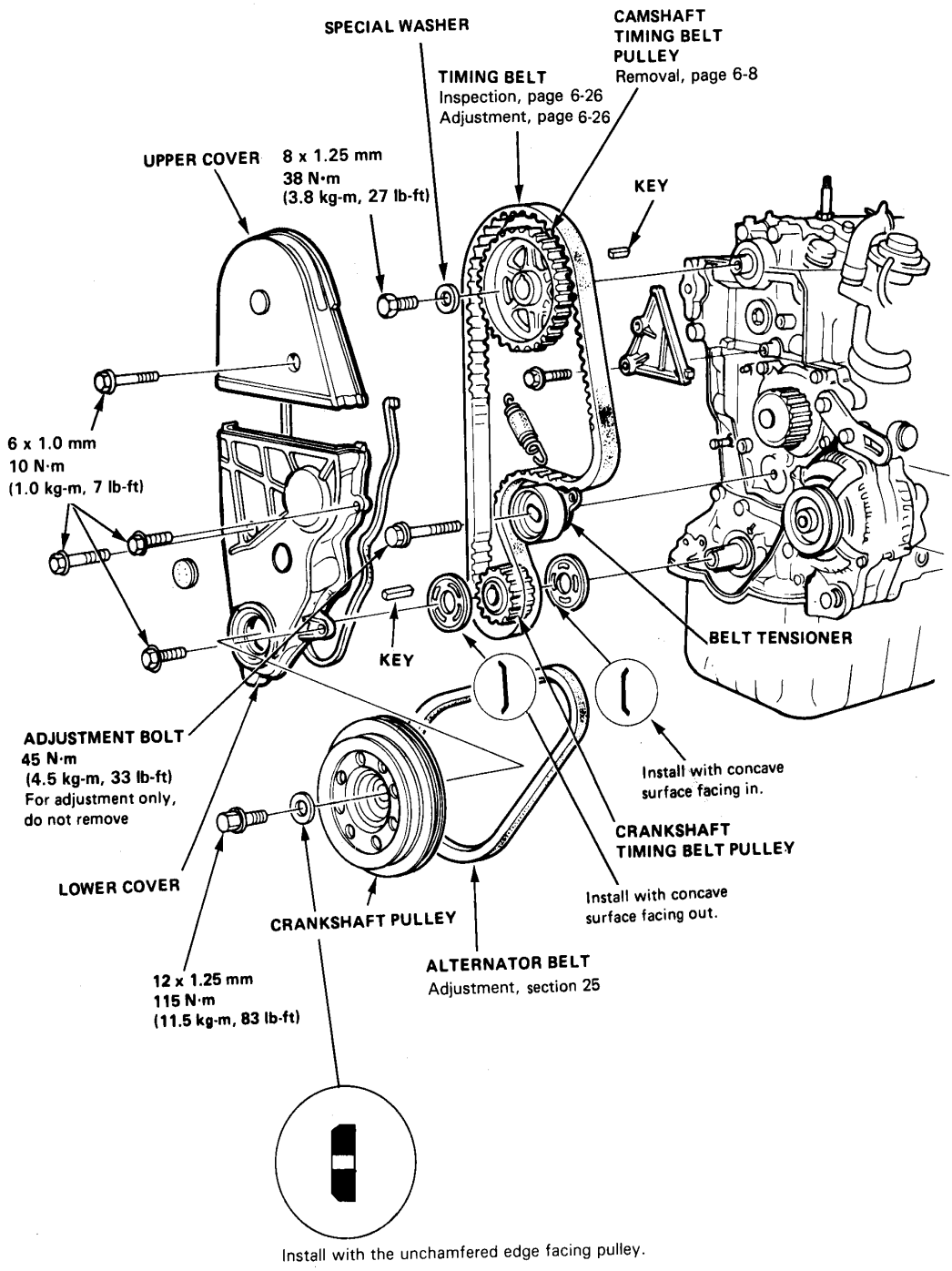

Positioning Crankshaft Before Installing Timing Belt

NOTE: Install the timing belt with the No. 1 piston at TDC (Top Dead Center) on the compression stroke.

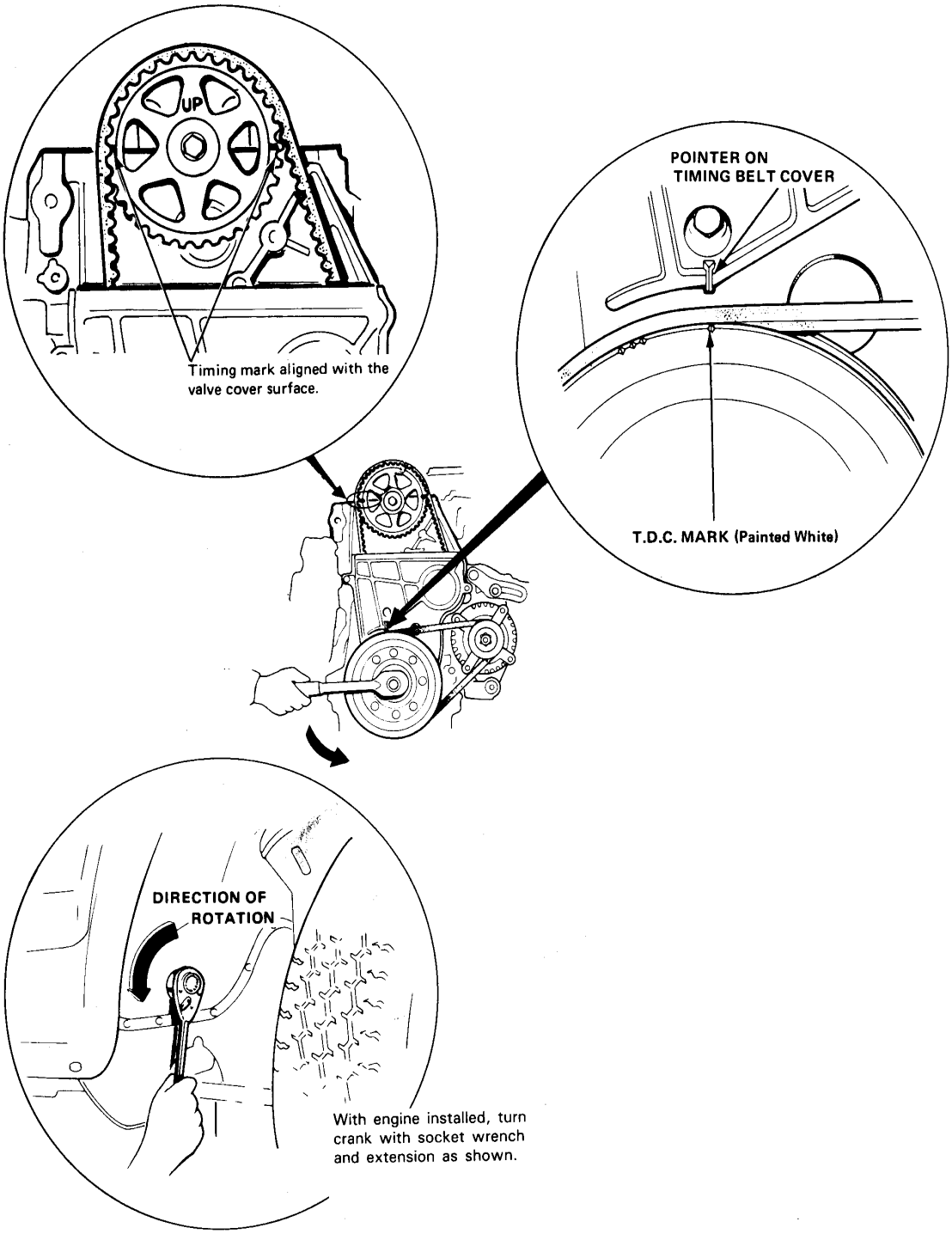

Timing Belt

Inspection

NOTE:
- Replace belt if oil soaked.
- Remove any oil or solvent that gets on the belt.

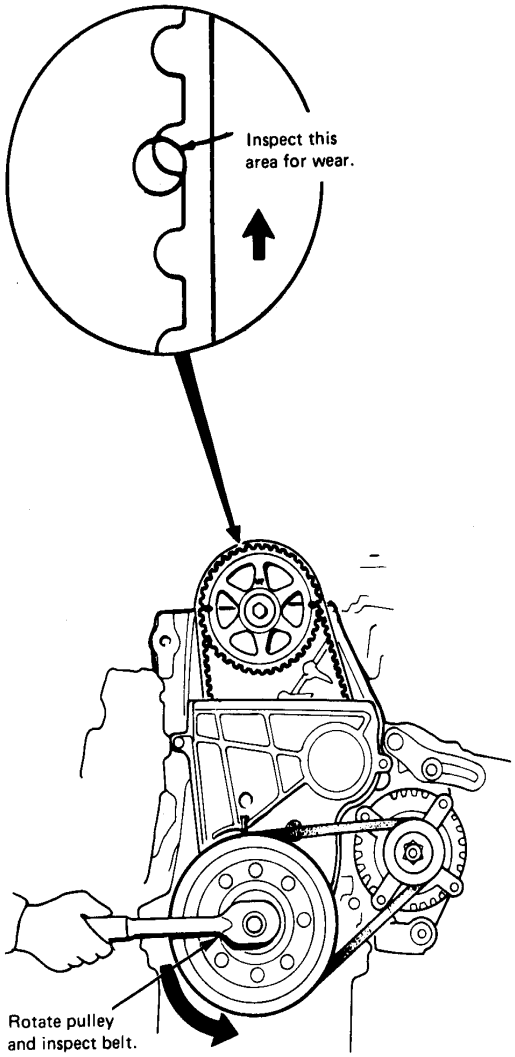

Tension Adjustment

CAUTION: Always adjust timing belt tension with the engine cold.

NOTE: Tensioner is spring-loaded to apply proper tension to the belt automatically after making the following adjustment:

1. Set the No. 1 piston at TDC.
2. Loosen adjusting bolt.

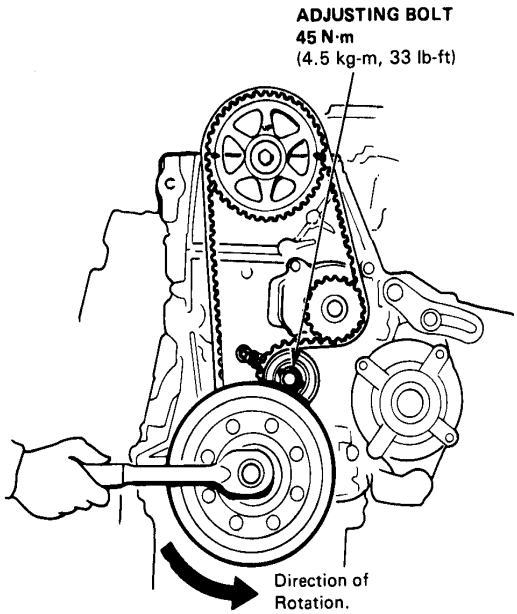

3. Rotate crankshaft counterclockwise 3-teeth on camshaft pulley to create tension on timing belt.
4. Tighten adjusting bolt.
5. If pulley bolt broke loose while turning crank, re-torque it to 115 N·m (11.5 kg-m, 83 lb-ft).

   NOTE: Put transmission in gear and set parking brake before retorquing pulley bolt.

Valve

Adjustment

Carbureted Engine Std. shown: HF and Si similar

NOTE: Valves should be adjusted cold when the cylinder head temperature less than 38°C (100°F). Adjustment is the same for intake and exhaust valves.

1. Remove valve cover.

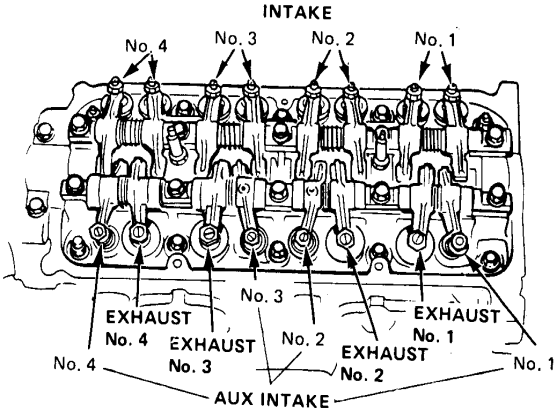

2. Set No. 1 piston at TDC. "UP" mark in puller should be at top, and TDC grooves on back side of puller should align with cylinder head surface. The distributor rotor must be pointing towards No. 1 plug wire.

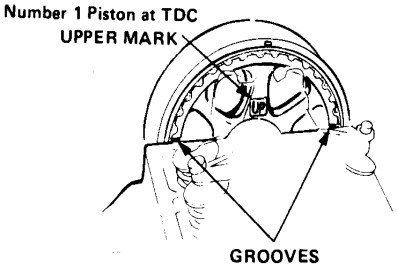

3. Adjust valves on No. 1 cylinder.

Intake and Auxiliary:	**0.17–0.22 mm (0.007–0.009 in.)**
Exhaust:	**0.22–0.27 mm (0.009–0.011 in.)**

4. Loosen locknut and turn adjustment screw until feeler gauge slides back and forth with slight amount of drag.

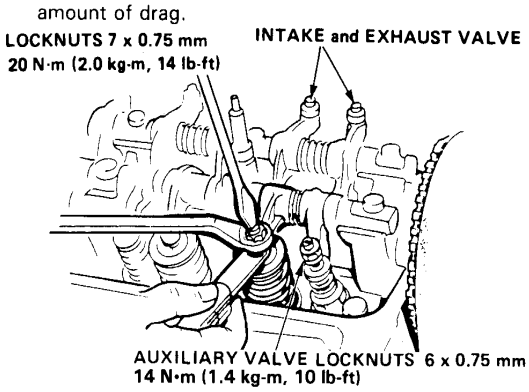

5. Tighten locknut and check clearance again. Repeat adjustment if necessary.
6. Rotate crankshaft 180° counterclockwise (cam pulley turns 90°). TDC groove should be aligned with the indentation in the belt cover. "UP" mark should not be visible. Distributor rotor should point to No. 3 plug wire. Adjust valves on No. 3 cylinder.

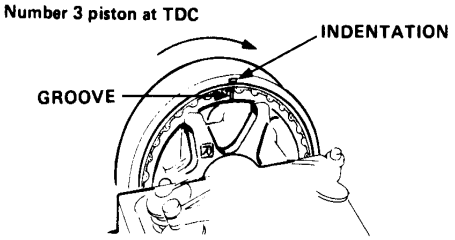

7. Rotate crankshaft 180° counterclockwise to bring No. 4 piston to TDC. Both TDC grooves are once again visible and distributor rotor points to No. 4 plug wire. Adjust valves on No. 4 cylinder.

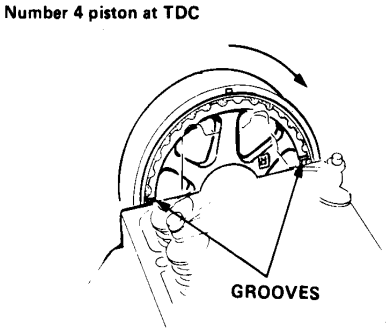

8. Rotate crankshaft 180° counterclockwise to bring No. 2 piston to TDC. Mark on pulley should align with indentation on the belt cover. "UP" mark should be visible. Distributor rotor should point to No. 2 plug wire. Adjust valves on No. 2 cylinder.

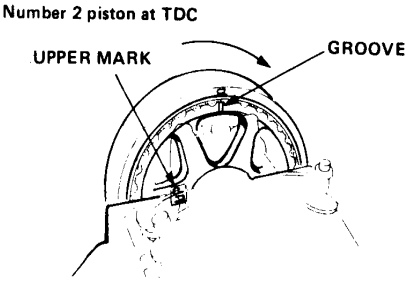

Engine Block

Engine Block

Illustrated Index

Lubricate all internal parts with engine oil during reassembly.

NOTE: Apply non-hardening liquid gasket to the mating surfaces of the right side cover and oil pump case, before installing them.

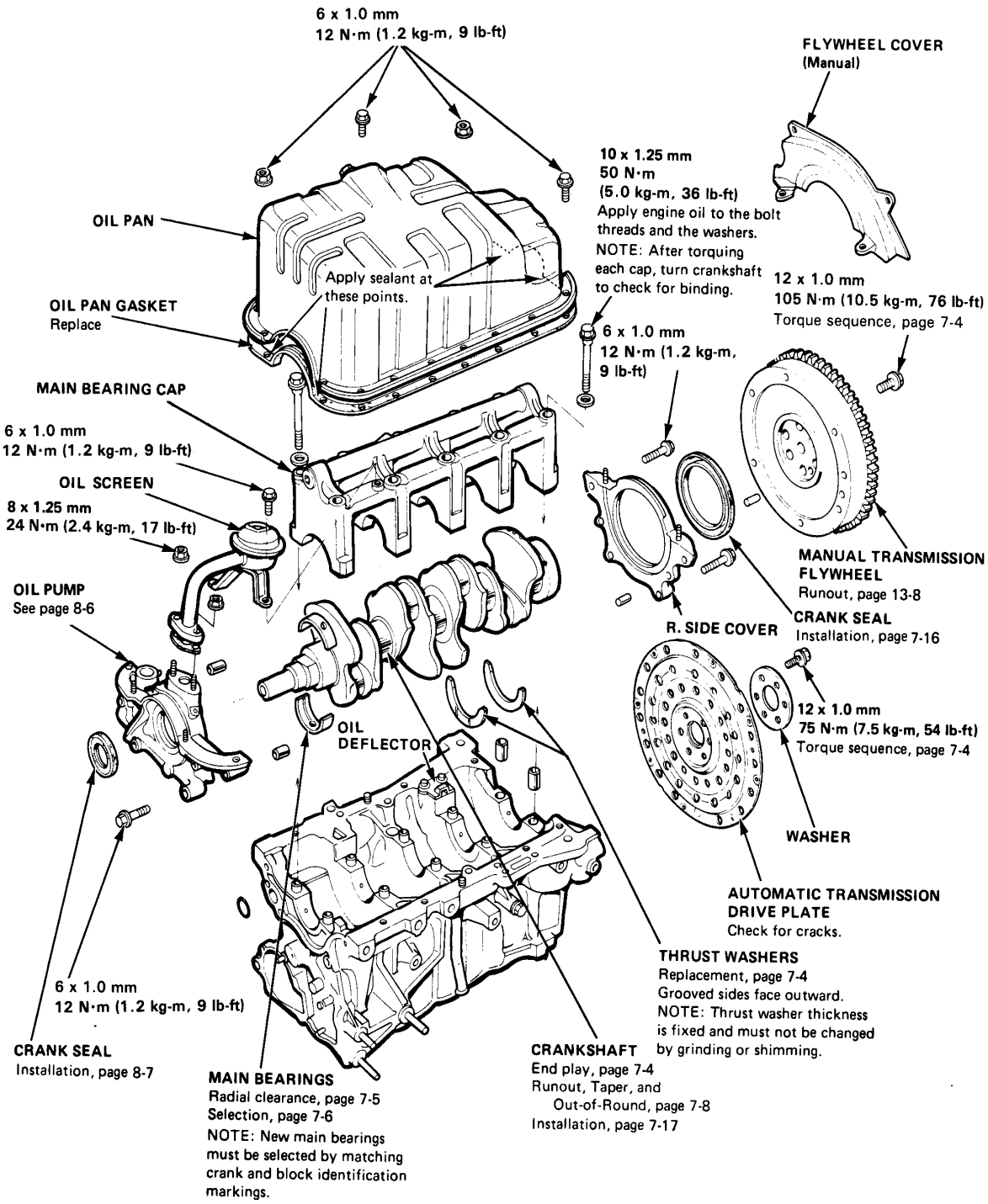

(1500 shown; 1300 similar)
NOTE: New rod bearings must be selected by matching connecting rod and crankshaft identification markings (page 7-6).

NOTE: 1300 pistons are fitted with two piston rings.

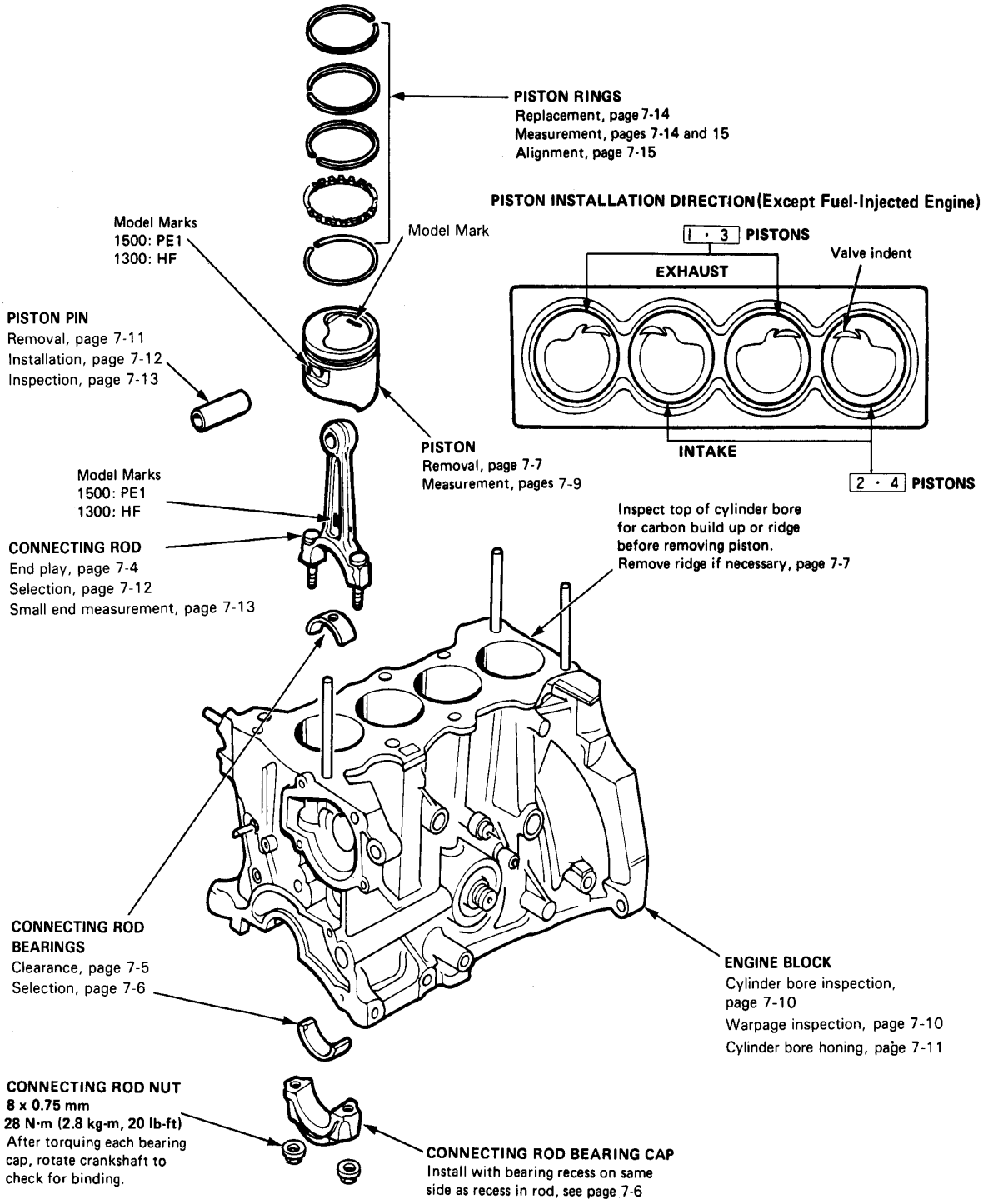

Flywheel and Drive Plate

Flywheel Replacement (Manual Transmission)

Remove the six flywheel bolts, then separate the flywheel from the crankshaft flange. After installation, tighten the bolts in the sequence shown.

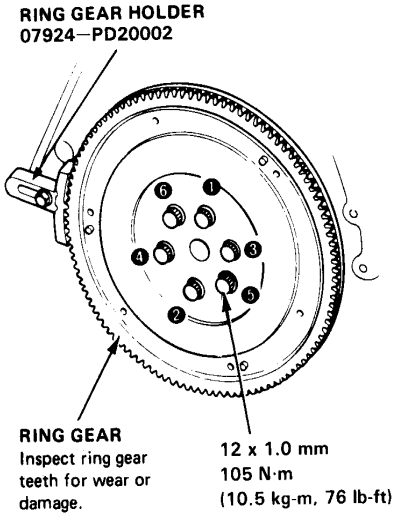

Drive Plate Replacement (Automatic Transmission)

Remove the six drive plate bolts, then separate the drive plate from the crankshaft flange. After installation, tighten the bolts in the sequence shown.

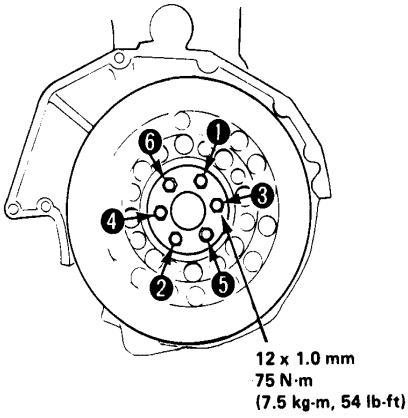

Connecting Rod and Crankshaft

Connecting Rod End Play

Standard (New): 0.15—0.30 mm (0.006—0.012 in.)
Service Limit: 0.40 mm (0.016 in.)

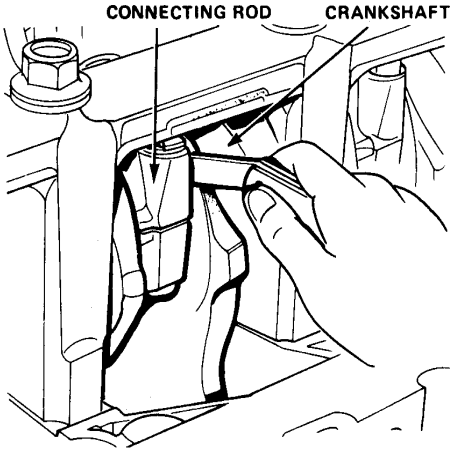

- If out-of-tolerance, install new connecting rod.
- If still out-of-tolerance, replace crankshaft (pages 7-7 and 7-17).

Crankshaft End Play

Push crank firmly away from dial indicator, and zero dial against end of crank. Then pull crank firmly back toward indicator; dial reading should not exceed service limit.

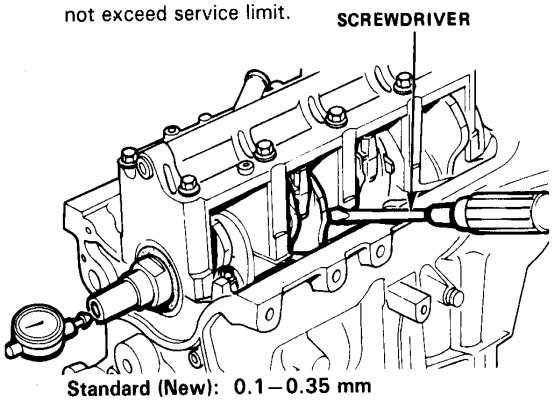

Standard (New): 0.1—0.35 mm (0.004—0.014 in.)
Service Limit: 0.45 mm (0.018 in.)

- If end play is excessive, inspect thrust washers and thrust surface on crankshaft. Replace parts as necessary.

NOTE: Thrust washer thickness is fixed and must not be changed either by grinding or shimming. Thrust washers are installed with grooved sides outward.

Main Bearing

Clearance

1. To check main bearing clearance, remove the main cap and bearing halves.
2. Clean each main journal and bearing half with a clean shop rag.
3. Place one strip of plastigage across each main journal.
   NOTE: If the engine is still in the car when you bolt the main cap down to check clearance, the weight of the crank and flywheel will flatten the plastigage further than just the torque on the cap bolts, and give you an incorrect reading. For an accurate reading, support the crank with a jack under the counterweights and check only one bearing at a time.
4. Reinstall the bearings and cap, then torque the bolts to 50 N·m (5.0 kg-m, 36 lb-ft).
   NOTE: Do not rotate the crank during inspection.
5. Remove the cap and bearings again, and measure the widest part of the plastigage.

   Main Bearing Clearance:
   Standard (New): 0.024—0.042 mm (0.0009—0.0017 in.)
   Service Limit: 0.07 mm (0.003 in.)

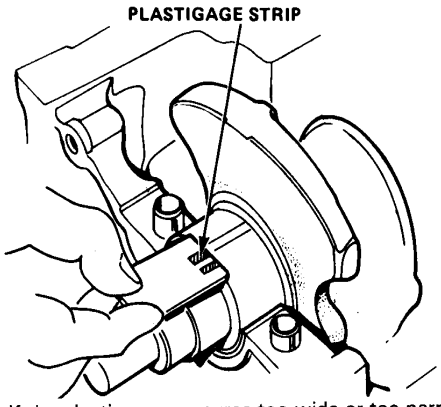

6. If the plastigage measures too wide or too narrow, (remove the engine if it's still in the car), remove the crank, remove the upper half of the bearing, then install a new, complete bearing with the same color code (select the color as shown on the next page), and recheck the clearance.

   CAUTION: Do not file, shim, or scrape the bearings or the caps to adjust clearance.

7. If the plastigage shows the clearance is still incorrect, try the next larger or smaller bearing (the color listed above or below that one), and check again.

   NOTE: If the proper clearance cannot be obtained by using the appropriate larger or smaller bearings, replace the crank and start over.

Rod Bearing

Clearance

1. Remove the connecting rod cap and bearing half.
2. Clean the crankshaft rod journal and bearing half with a clean shop rag.
3. Place plastigage across the rod journal.
4. Reinstall the bearing half and cap, and torque the nuts to 28 N·m (2.8 kg-m, 20 lb-ft).

   NOTE: Do not rotate the crank during inspection.

5. Remove the rod cap and bearing half and measure the widest part of the plastigage.

   Connecting Rod Bearing Clearance:
   Standard (New): 0.020—0.038 mm (0.0008—0.0015 in.)
   Service Limit: 0.07 mm (0.003 in.)

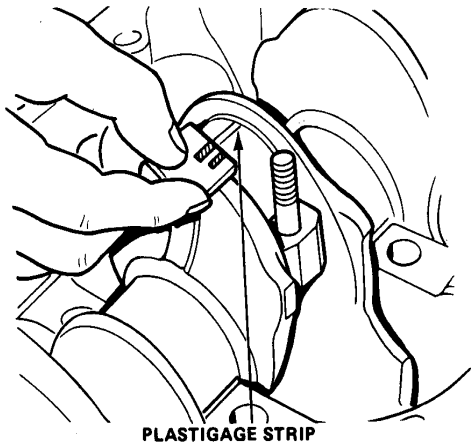

6. If the plastigage measures too wide or too narrow, remove the upper half of the bearing, install a new, complete bearing with the same color code (select color as shown on next page), and recheck the clearance.

   CAUTION: Do not file, shim, or scrape the bearing or the caps to adjust clearance.

7. If the plastigage shows the clearance is still incorrect, try the next larger or smaller bearing (the color listed above or below that one), and check clearance again.

   NOTE: If the proper clearance cannot be obtained by using the appropriate larger or smaller bearings, replace the crank and start over.

Main Bearing

Selection

Crank Bore Code Location (Marks)

Marks have been stamped on the end of the block as a code for the size of each of the 5 main journal bores. Use them, and the numbers stamped on the crank (codes for main journal size), to choose the correct bearings.

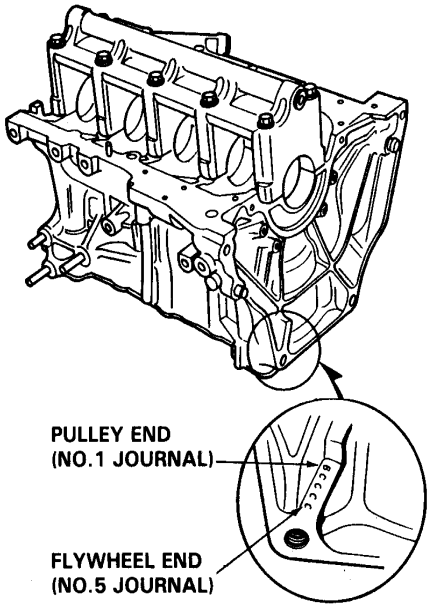

Main Journal Code Locations (Numbers)

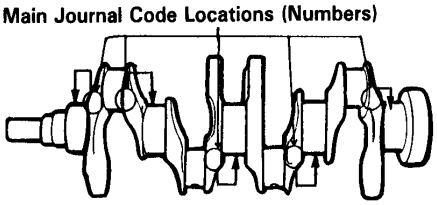

Bearing Identification

Color code is on the edge of the bearing

→ Larger crank bore

A	B	C	D

→ Smaller bearing (thicker)

Red	Pink	Yellow	Green
Pink	Yellow	Green	Brown
Yellow	Green	Brown	Black
Green	Brown	Black	Blue

1
2
3
4

Smaller main journal ↓ ↓ Smaller bearing (thicker)

Rod Bearing

Selection

Rod Code Location (Numbers)

Numbers have been stamped on the side of each connecting rod as a code for the size of the big end. Use them, and the letters stamped on the crank (codes for rod journal size), to choose the correct bearings.

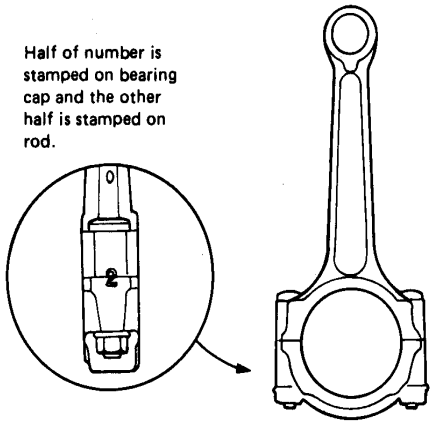

Rod Journal Code Locations (Letters)

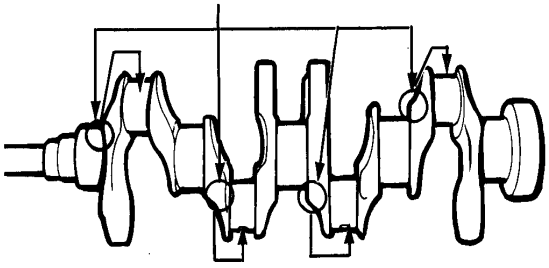

Bearing Identification

Color code is on the edge of the bearing

→ Larger big end bore

1	2	3	4

→ Smaller bearing (thicker)

Red	Pink	Yellow	Green
Pink	Yellow	Green	Brown
Yellow	Green	Brown	Black
Green	Brown	Black	Blue

A
B
C
D

Smaller rod journal ↓ ↓ Smaller bearing (thicker)

Crankshaft/Piston

Removal

1. Remove the right side cover.

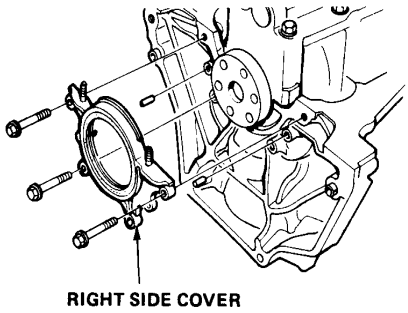

2. Remove the oil screen.

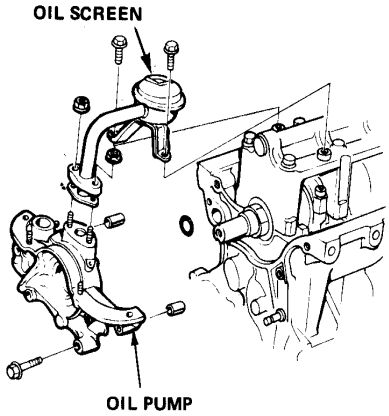

3. Remove the oil pump.

4. Turn the crankshaft so No. 2 and 3 crankpins are at the bottom.

5. Remove the rod caps/bearings and main caps/bearings. Keep all caps/bearings in order.

6. Lift the crankshaft out of engine, being careful not to damage journals.

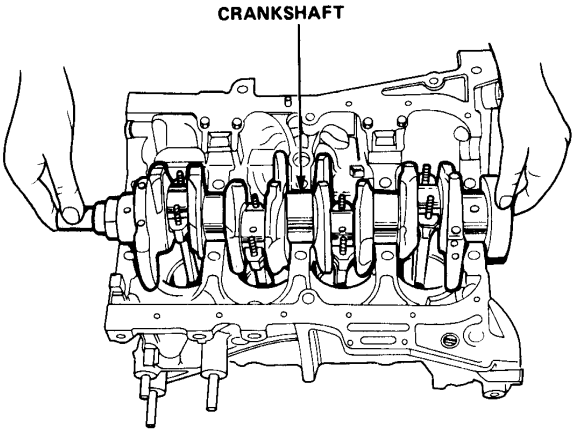

7. Remove upper bearing halves from connecting rods and set aside with their respective caps.

8. Reinstall main cap and bearings on engine in proper order.

9. If you can feel a ridge of metal or hard carbon around the top of each cylinder, remove it with a ridge reamer. Follow reamer manufacturer's instructions.

   CAUTION: If the ridge is not removed, it may damage the pistons as they are pushed out.

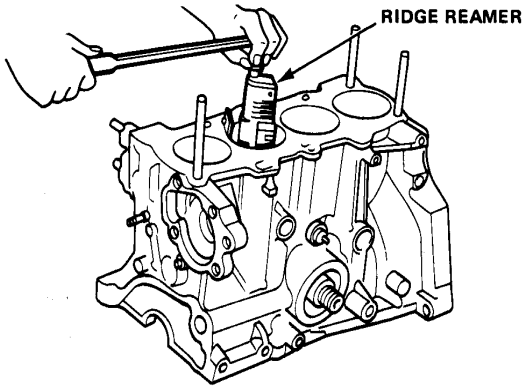

10. Use the wooden handle of a hammer to drive out pistons.

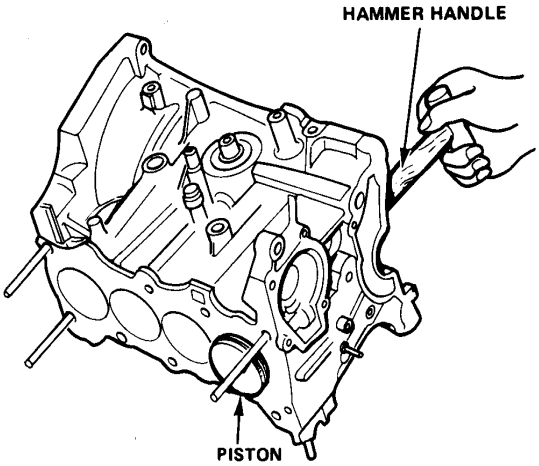

11. Reinstall the rod bearings and caps after removing each piston/connecting rod assembly.

12. Mark piston/connecting rod assemblies with cylinder numbers to avoid mixup on reassembly.

    NOTE: The existing number on the connecting rod does not indicate its position in the engine, it indicates the rod bore size.

Crankshaft

Inspection

- Clean the crankshaft oil passages with pipe cleaners or a suitable brush.
- Check the keyway and threads.

Alignment

- Measure runout on all main journals to make sure the crank is not bent.
- The difference between measurements on each journal must not be more than the service limit.

Crankshaft Total Indicated Runout:
Standard (New): 0.03 mm (0.0012 in.)
Service Limit: 0.06 mm (0.002 in.)

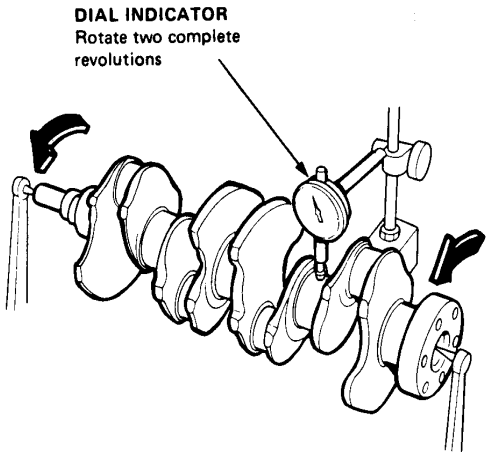

Out-of-Round and Taper

- Measure out-of-round at the middle of each rod and main journal in two places.
- The difference between measurements on each journal must not be more than the service limit.

Journal Out-of-Round:
Standard (New): 0.005 mm (0.0002 in.)
Service Limit: 0.010 mm (0.0004 in.)

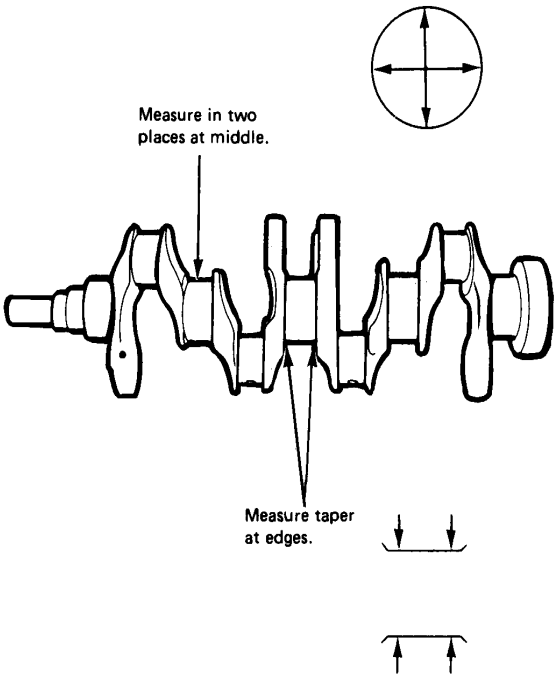

- Measure taper at edges of each rod and main journal.
- The difference between measurements on each journal must not be more than the service limit.

Journal Taper:
Standard (New): 0.005 mm (0.0002 in.)
Service Limit: 0.010 mm (0.0004 in.)

Piston

Piston-to-Block Clearance

1. Make a preliminary piston-to-block clearance check with a feeler gauge:

   Service Limit: 0.07 mm (0.003 in.)

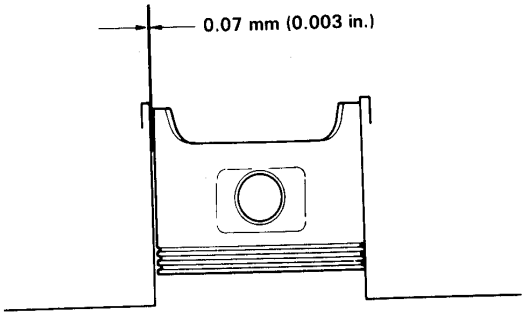

If the clearance is near or exceeds the service limit, inspect the piston and cylinder block for excessive wear.
To confirm the feeler gauge check, further measurement with a micrometer will be necessary.

2. Calculate difference between cylinder bore diameter on page 7-13 and piston diameter.

   Piston-to-Cylinder Clearance:
   Standard (New): 0.01—0.05 mm (0.0004—0.0020 in.)
   Service Limit: 0.07 mm (0.003 in.)

Inspection

1. Check the piston for distortion or cracks.

   NOTE: If cylinder is bored, an oversized piston must be used.

2. Measure piston diameter at a point 16 mm (0.63 in.) from bottom of skirt.

   Piston Diameter
   Standard (New): 73.97—73.99 mm (2.9122—2.9130 in.)
   Service Limit: 73.96 mm (2.912 in.)

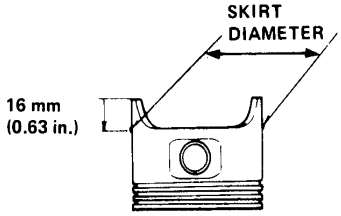

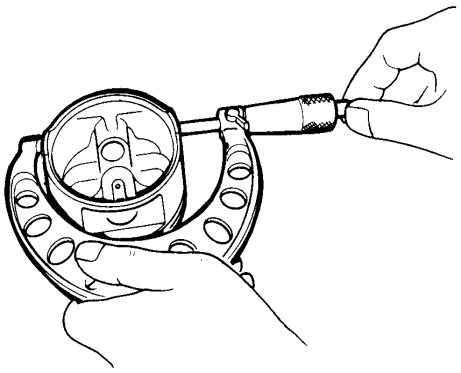

Oversize Piston Diameter
Standard 0.25: 74.215—74.248 mm (2.9218—2.9231 in.)
Standard 0.5: (1300 only) 74.465—74.498 mm (2.9317—2.9330 in.)

3. Check the piston pin-to-piston clearance. Coat the piston pin with engine oil.
   It should then be possible to push the piston pin into the piston hole with thumb pressure.

   Piston Pin-to-Piston Clearance:
   Service limit: 0.010—0.022 mm (0.0004—0.0009 in.)

Cylinder Block

Inspection

1. Measure wear and taper in directions X and Y at three levels in each cylinder as shown.

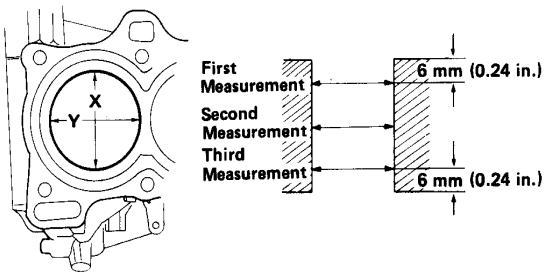

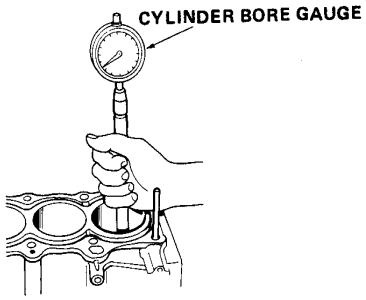

Cylinder Bore Size
Standard (New): 74.00–74.02 mm (2.9134–2.9142 in.)
Service Limit: 74.10 mm (2.917 in.)

Oversize
Standard 0.25 (New): 74.215–74.248 mm (2.9218–2.9231 in.)
Standard 0.5 (New): (1300 only) 74.465–74.498 mm (2.9317–2.9330 in.)

Bore Taper
Limit: (Difference between first and third measurement) 0.05 mm (0.002 in.)

- If measurements in any cylinder are beyond Oversize Bore Service Limit, replace the block.
- If block is to be rebored, refer to Piston Clearance Inspection (page 7-9) after reboring.

NOTE: Scored or scratched cylinder bores must be honed.

Out-of-Round
Service Limit: 0.05 mm (0.002 in.)

2. Check the top of the block for warpage. Measure along the edges and across the center as shown.

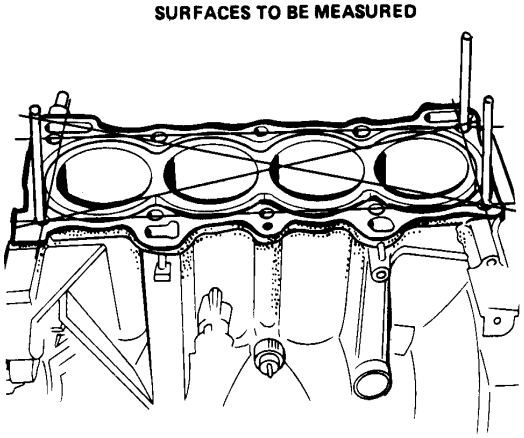

Engine Block Warpage:
Standard (New): 0.07 mm (0.003 in.)
Service Limit: 0.10 mm (0.004 in.)

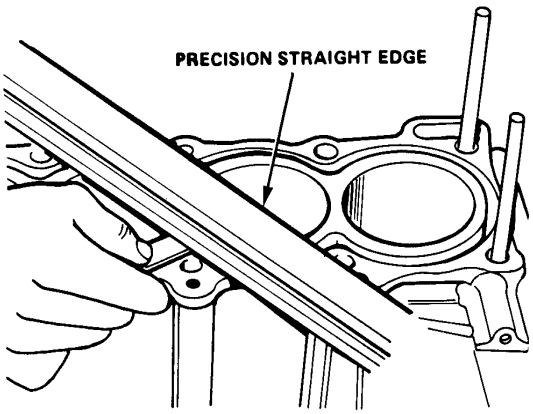

Bore Honing

1. Measure cylinder bores as shown on page7-10.If the block can be re-used, hone the cylinders, and re-measure the bores.

2. Hone cylinder bores with honing oil and medium (220 grit) stone in a 60 degree cross-hatch pattern.

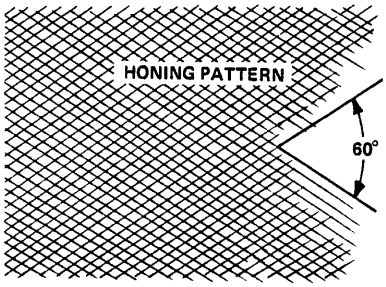

3. When honing is complete, thoroughly clean the engine block of all metal particles. Wash the cylinder bores with hot soapy water, then dry and oil immediately to prevent rusting.

4. If scoring or scratches are still present in cylinder bores after honing to service limit, rebore the engine block.

   NOTE: Some light vertical scoring and scratching is acceptable if it is not deep enough to catch your fingernail and does not run the full length of the bore.

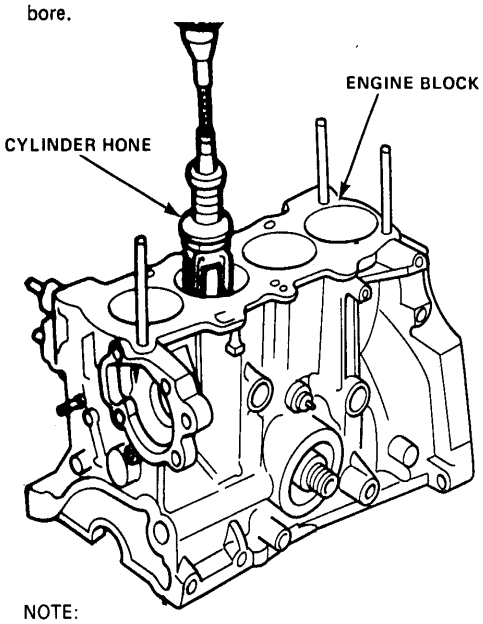

NOTE:
- After honing, clean the cylinder thorughly with soapy water.
- Only scored or scratched cylinder bore mast be honed.

Piston Pin

Removal

1. Install the attachment on the piston base.

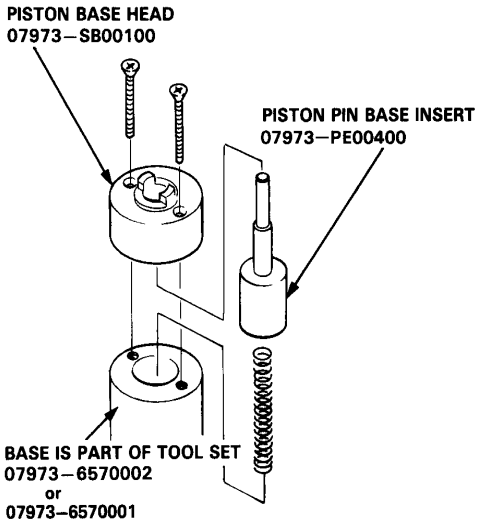

2. Turn the handle of the piston pin driver so that the end of the drive aligns with the first groove of the driver body as shown.

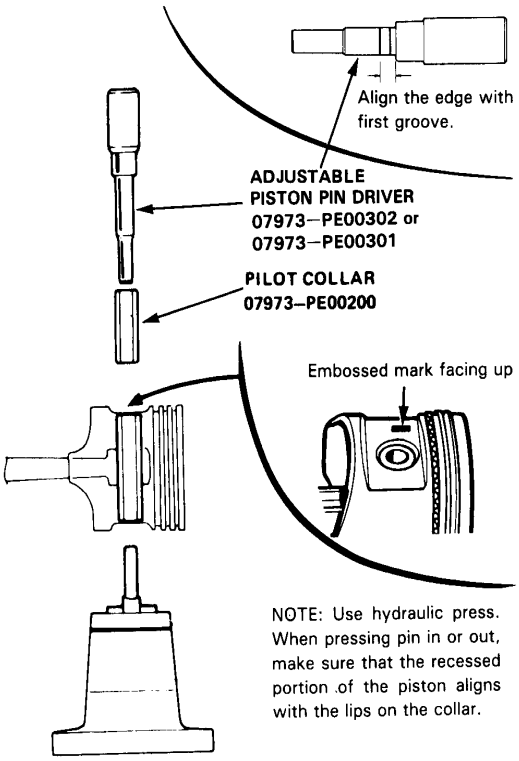

3. Place the piston on the piston base and press the pin out with a hydraulic press.

Connecting Rod

Selection

Each rod is sorted into one of four tolerance ranges (from +0.006 to +0.024 mm, in 0.006 mm increments) depending on the size of its big end bore. It's then stamped with a number (1, 2, 3, or 4) indicating that tolerance. You may find any combination of 1, 2, 3, or 4 in any engine.

Normal Bore Size:
1500: 45 mm (1.77 in.)
1300: 41 mm (1.61 in.)

NOTE:
- Reference numbers are for big end bore size and do NOT indicate the position of rod in engine.
- Inspect connecting rod for cracks and heat damage.

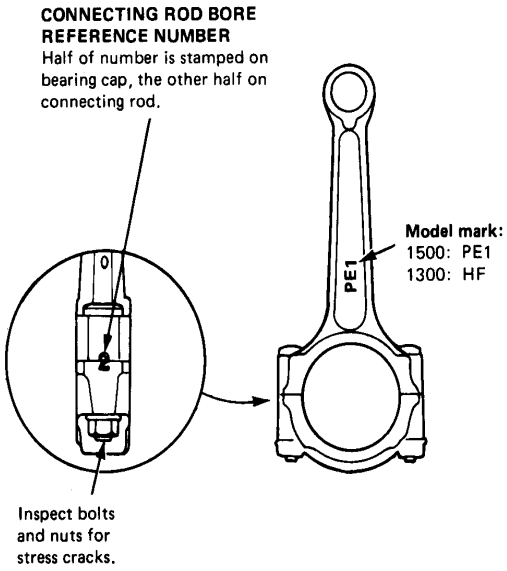

Piston Pin

Installation

1. Use a hydraulic press for installation.
   - When pressing pin in or out, be sure you position the recessed flat on the piston against the lugs on the base attachment.

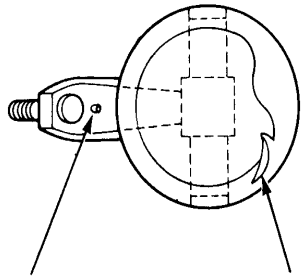

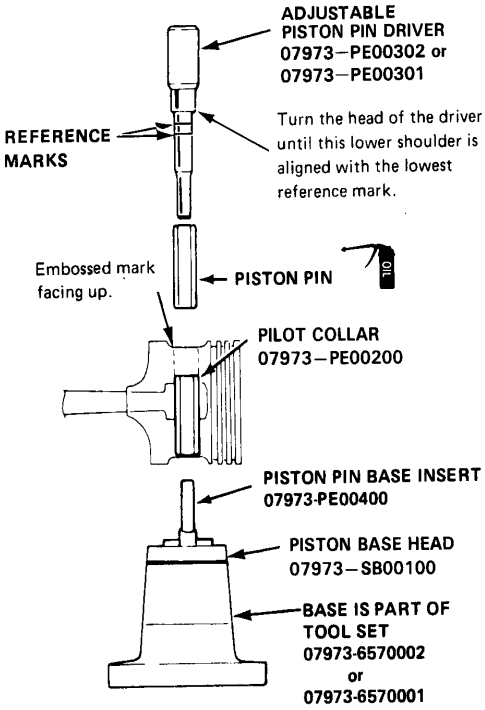

NOTE: Install the assembled piston and rod with the oil hole facing the intake manifold.

Inspection

1. Measure the diameter of the piston pin.

Piston Pin Diameter:
Standard (New): 18.994—19.0 mm (0.7478—0.7480 in.)
Oversize: 18.997—19.003 mm (0.7479—0.7481 in.)

NOTE: All replacement piston pins are oversize.

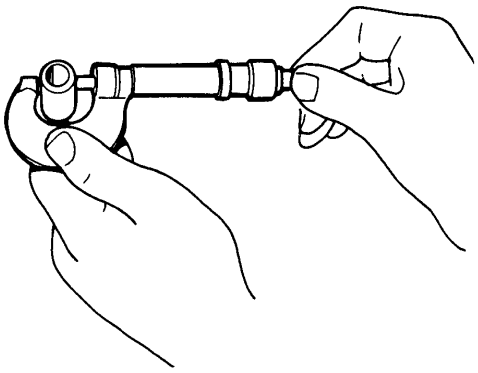

2. Zero the dial indicator to the piston pin diameter.

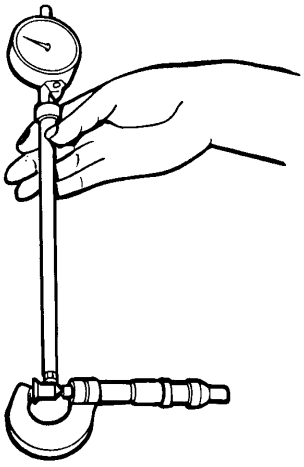

3. Measure the piston pin-to-piston clearance.

NOTE: Check the piston for distortion or cracks.

If the piston pin clearance is greater than 0.022 mm (0.0009 in.), re-measure using an oversize piston pin.

Piston Pin-to-Piston Clearance:
Service Limit: 0.010—0.022 mm (0.0004—0.0009 in.)

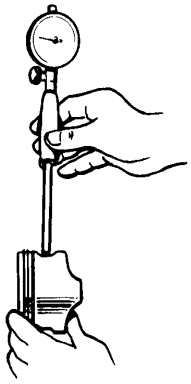

4. Check the difference between piston pin diameter and connecting rod small end diameter.

Piston Pin-to-Connecting Rod Interference:
Standard (New): 0.02—0.04 mm (0.0008—0.0016 in.)

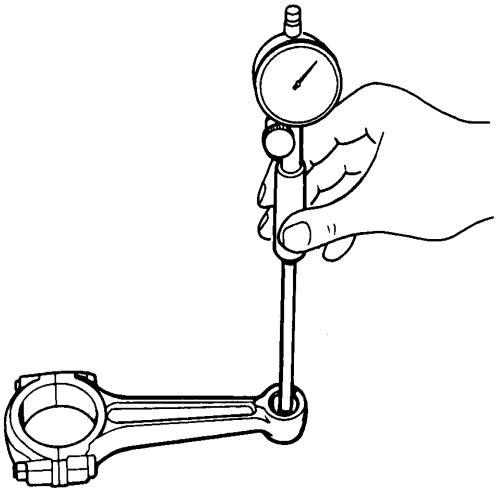

Piston Rings

End Gap

1. Using a piston, push a new ring into the cylinder bore 15—20 mm (0.6—0.8 in.) from the bottom.

2. Measure the piston ring end-gap with a feeler gauge:

   - If the gap is too small, check to see if you have the proper rings for your engine.

   - If the gap is too large, re-check the cylinder bore diameter against the wear limits on page 7-9. If the bore is over limit, the engine block must be rebored.

Piston Ring End-Gap:
1500
Top and Second Ring
Standard (New): 0.15—0.35 mm (0.006—0.014 in.)
Service Limit: 0.6mm (0.02 in.)

Oil Ring (Carbureted Engine)
Standard (New): 0.2—0.6 mm (0.008—0.024 in.)
Service Limit: 0.8 mm (0.03 in.)
Oil Ring (Fuel-Injected Engine)
Standard (New): 0.3–0.9 mm (0.012–0.035 in.)
Service Limit: 1.1 mm (0.04 in.)

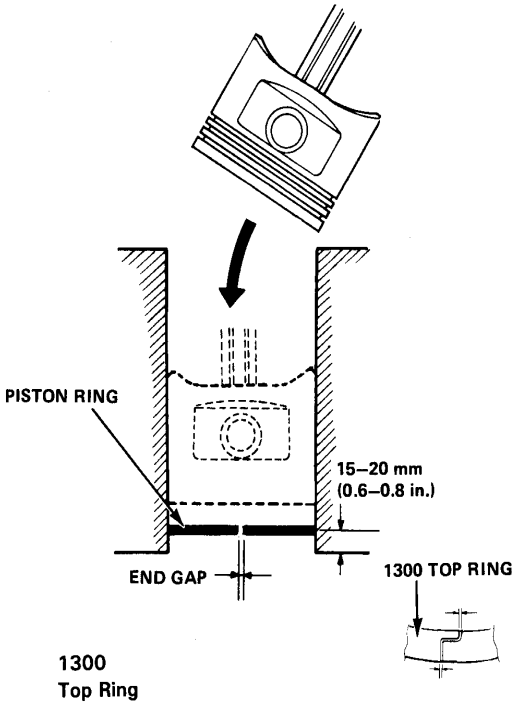

1300
Top Ring
Standard (New): 0.15—0.35 mm (0.006—0.014 in.)
Service Limit: 0.60 mm (0.02 in.)

Replacement

1. Using ring expander, remove old piston rings.

2. Clean all ring grooves thoroughly.

   NOTE: Use squared-off broken ring, or file down blade on ring groove cleaner to fit (compression rings are 1.2 mm wide; oil ring is 2.8 mm wide).

   CAUTION: Do not use a wire brush to clean ring lands, or cut ring lands deeper with cleaning tool.

   NOTE: If piston is to be separated from connecting rod, do not install new rings yet.

3. Install new rings in proper sequence and position (page 7-15).

   NOTE: Do not re-use old piston rings.

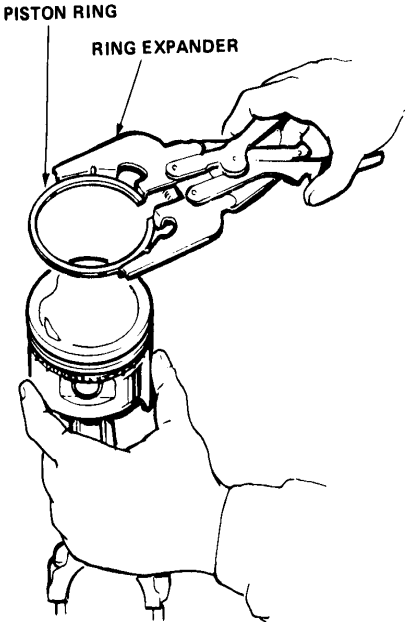

Ring Land Clearances

After installing new set of rings, measure ring-to-land clearances:

Top Ring Clearance: (Carbureted Engine)
Standard (New): 0.03–0.06 mm (0.0012–0.0024 in.)
Service Limit: 0.13 mm (0.005 in.)

Top Ring Clearance: (Fuel-Injected Engine)
Standard (New): 0.030–0.055 mm (0.0012–0.0022 in.)
Service Limit: 0.13 mm (0.005 in.)

Second Ring Clearance (1500 only):
Standard (New): 0.030–0.055 mm (0.0012–0.0022 in.)
Service Limit: 0.13 mm (0.005 in.)

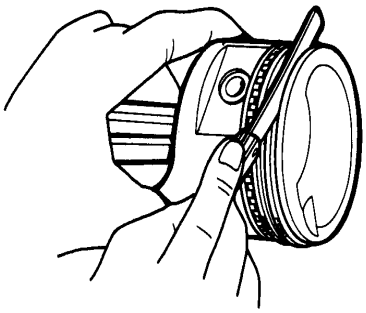

Alignment

1. Install the rings as shown on page 7-14.

   Identify top and second rings by the chamfer on the edge, and make sure they are in proper grooves on piston.

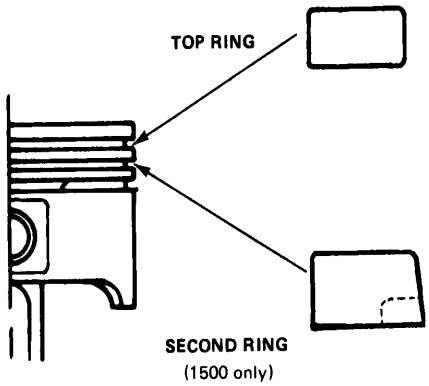

2. Rotate the rings in grooves to make sure they do not bind.
3. The manufacturing marks must be facing upward.

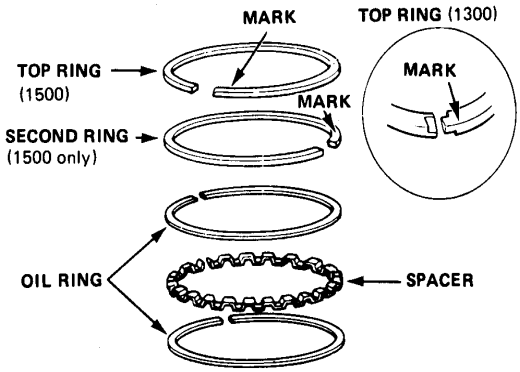

4. Position the ring end gaps as shown:

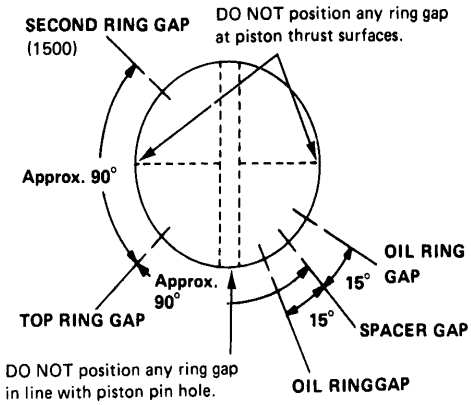

Piston

Installation

Before installing the piston, apply a coat of engine oil to the ring grooves and cylinder bores.

NOTE: Install the 1·3 PISTONS in the Nos. 1 and 3 cylinders, and the 2·4 PISTONS in the Nos. 2 and 4 cylinders.

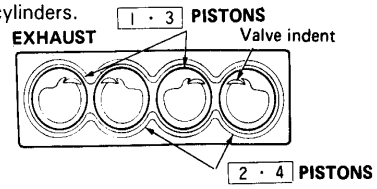

1. If the crankshaft is already installed:
   - Remove the connecting rod caps, then slip short sections of rubber hose over the threaded ends of the connecting rod bolts.
   - Install the ring compressor, check that the bearing is securely in place, then position the piston in the cylinder and drive it in using the wooden handle of a hammer.
     Stop after the ring compressor pops free and check the connecting rod-to-crank journal alignment before driving rod into place.
   - Install the rod caps with bearings, and torque the nuts to 28 N·m (2.8 kg-m, 20 lb-ft).
2. If the crankshaft is not installed:
   - Remove the rod caps and bearings, install the ring compressor, then position the piston in the cylinder and drive it in using the wooden handle of a hammer.
   - Position all pistons at top dead center.

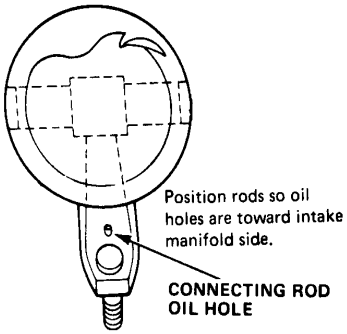

NOTE: Maintain downward force on ring compressor to prevent rings from expanding before entering the cylinder bore.

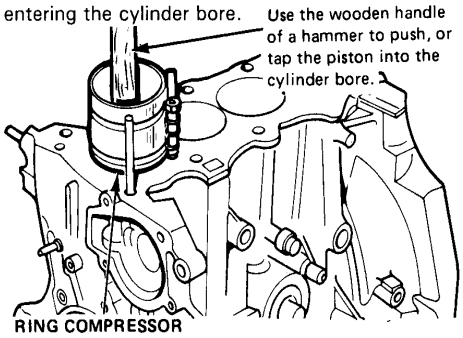

Oil Seal

Installation

The seal surface on the block should be dry. Apply a light coat of oil to the crankshaft and to the lip of seal.

1. Drive in flywheel-end seal until to bottoms against R. side cover.

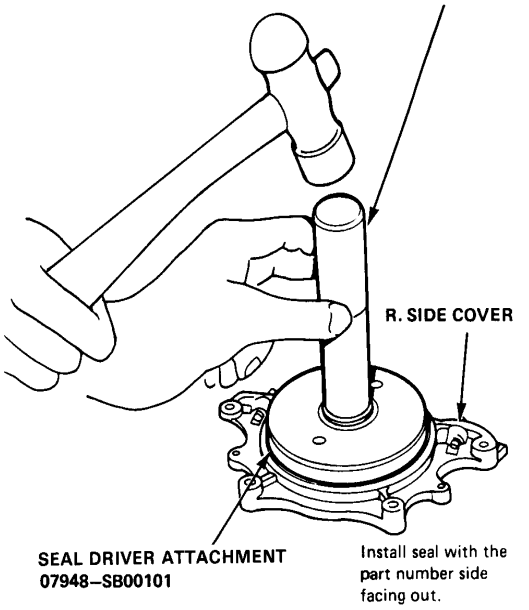

NOTE: Refer to page 8-7 for steps on the oil pump side oil seal.

Crankshaft

Installation

Before installing the crankshaft, apply a coat of engine oil to the main bearings and rod bearings.

1. Insert bearing halves in the engine block and connecting rods.

2. Hold the crankshaft so rod journals for cylinder No. 2 and No. 3 are straight down.

3. Lower the crankshaft into the block, seating the rod journals into connecting rods No. 2 and No. 3 and install rod caps and nuts finger tight.

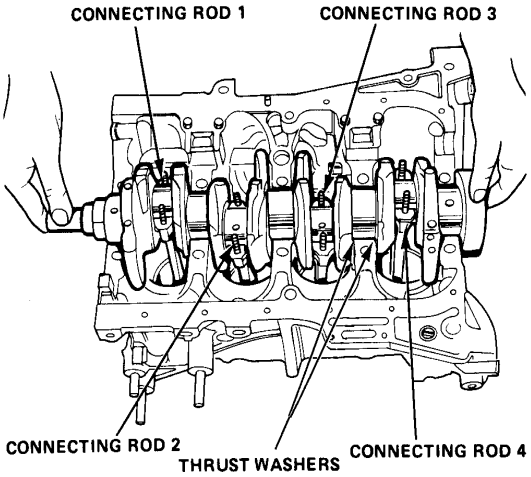

4. Rotate the crankshaft clockwise, seat journals into connecting rods No. 1 and No.4, and install the rod caps and nuts finger tight.

5. Install the thrust washers, main bearing halves and cap, check clearance with plastigage (page 7-5), then torque the nuts to 50 N·m (5.0 kg-m, 36 lb-ft), Oil thrust washer surfaces.

6. Check the rod bearing clearance with plastigage (page 7-5), then torque nuts to 28 N·m (28 kg-m, 20 lb-ft).

   NOTE: Reference numbers on connecting rod are for big-end bore tolerance and do NOT indicate the position of piston in engine.

   CAUTION: Whenever any crankshaft or connecting rod bearing is replaced, after reassembly run the engine at idling speed until it reaches normal operating temperature, then continue to run for approximately 15 minutes.

7. Apply non-hardening liquid gasket to the block mating surface of the right side cover and oil pump case, and install them on the engine block.

   NOTE:
   - Use HONDA PART NO 08740-99986 for the liquid gasket.
   - Check that the mating surfaces are clean and dry before applying liquid gasket.
   - Apply liquid gasket by starting with an even bend, centered between edges of the mating surface.
   - To prevent leakage of oil, apply liquid gasket to the inner threads of the bolt holes.
   - Do not allow the sealant to dry before assembly.
   - Wait at least 30 minutes after assembly before filling the engine with oil.

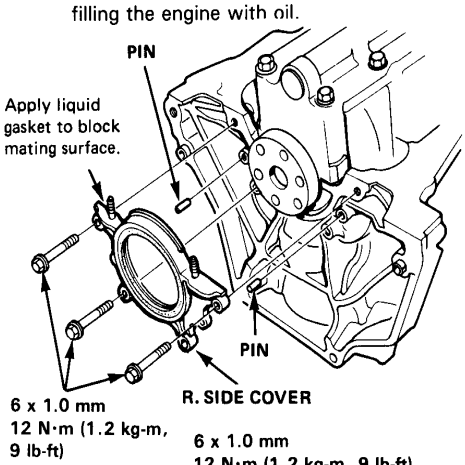

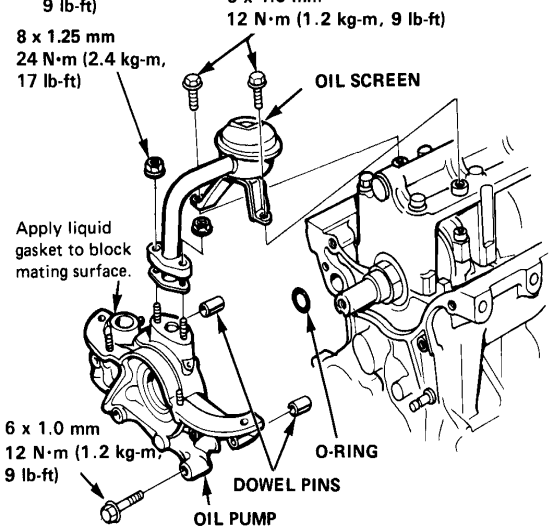

8. Install the oil strainer.

9. Install the oil pan.

Oil Pan

Replacement (Wagon 4WD)

WARNING

- **Make sure jacks and safety stands are placed properly (page 1-5 thru 7).**
- **Apply parking brake and block rear wheels, so car will not roll off stands and fall on you while working under it.**

Removal

1. Remove the engine splash shield (page 5-2).
2. Drain the engine oil (page 5-2).
3. Drain the transmission oil (page 5-2).
4. Remove the exhaust header pipe (page 5-7).
5. Disconnect the propeller shaft at the transmission (page 5-8).
6. Remove the transmission splash shield.

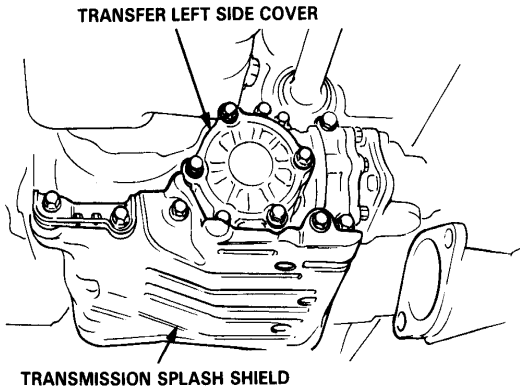

7. Remove the transfer left side cover from the transfer case.

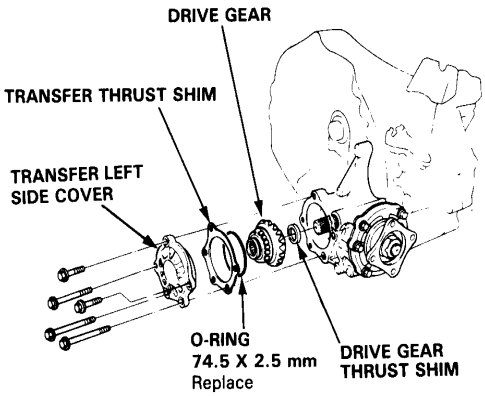

8. Remove the driven gear from the transfer case.

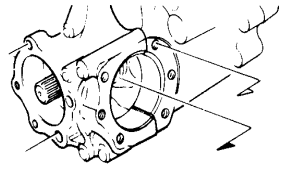

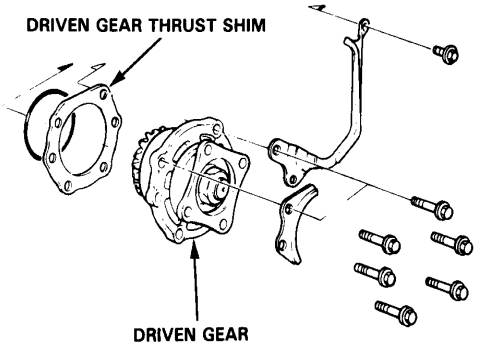

9. Remove the transfer case from the clutch housing.
10. Remove the clutch case cover.
11. Remove the oil pan by removing the bolts and nuts.

Installation

Installation is the reverse order of removal.

1. Thoroughly clean the mating surfaces of the oil pan and engine case. Apply Honda Sealant (P/N 08740—99986) to both surfaces of the gasket.

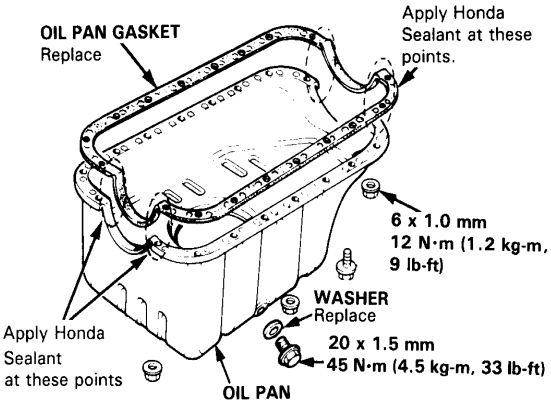

NOTE: Tighten bolts and nuts in two steps and torque the bolts in a criss-cross pattern.

2. Apply liquid gasket to the clutch housing mating surface of the transfer case.

NOTE:
- Check that the mating surfaces are clean and dry before applying Honda Sealant.
- Apply Honda Sealant evenly, in a narrow bead centered on the mating surface.
- To prevent leakage of oil, apply Honda Sealant to the inner threads of the bolt holes.
- Do not allow the Honda Sealant to dry before assembly.
- Fill the case with clean engine oil 30 minutes after assembly.

3. Install the transfer case on the clutch housing.

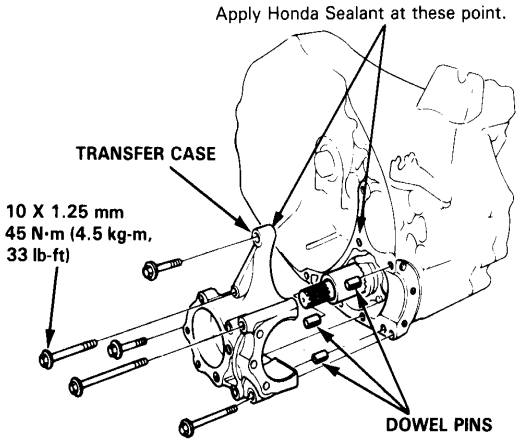

4. Install the following parts on and in the transfer shaft and transfer case:
   - Drive gear thrust shim
   - Drive gear (lubricate with oil)
   - Transfer thrust shim
   - Transfer left side cover

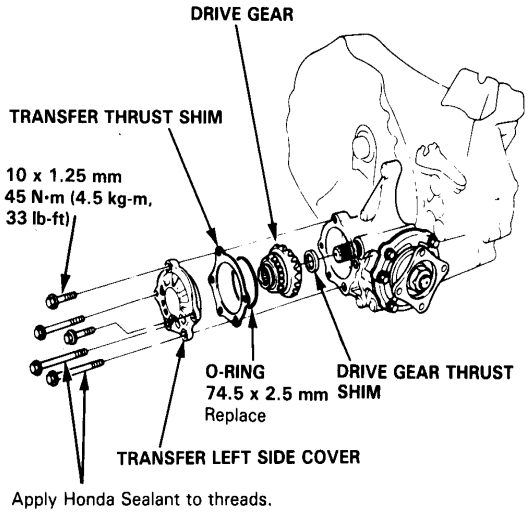

5. Install the following parts in the transfer case:
   - Driven gear thrust shim
   - Driven gear

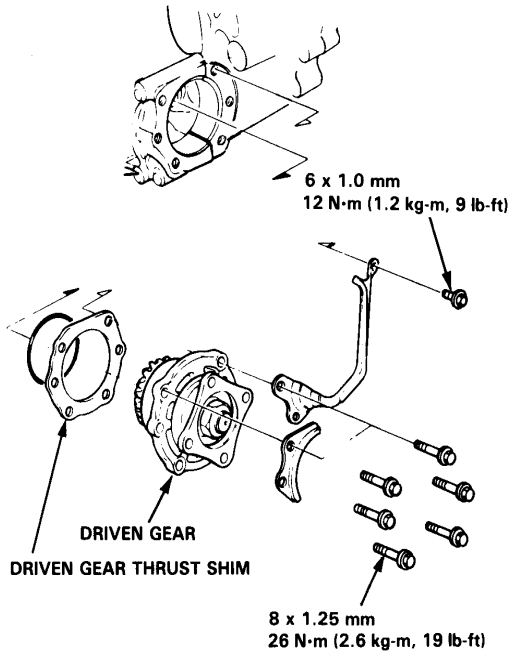

Engine Lubrication

Engine Lubrication

Illustrated Index

NOTE:
- Use new O-rings whenever reassembling.
- Apply oil to O-rings before installation.

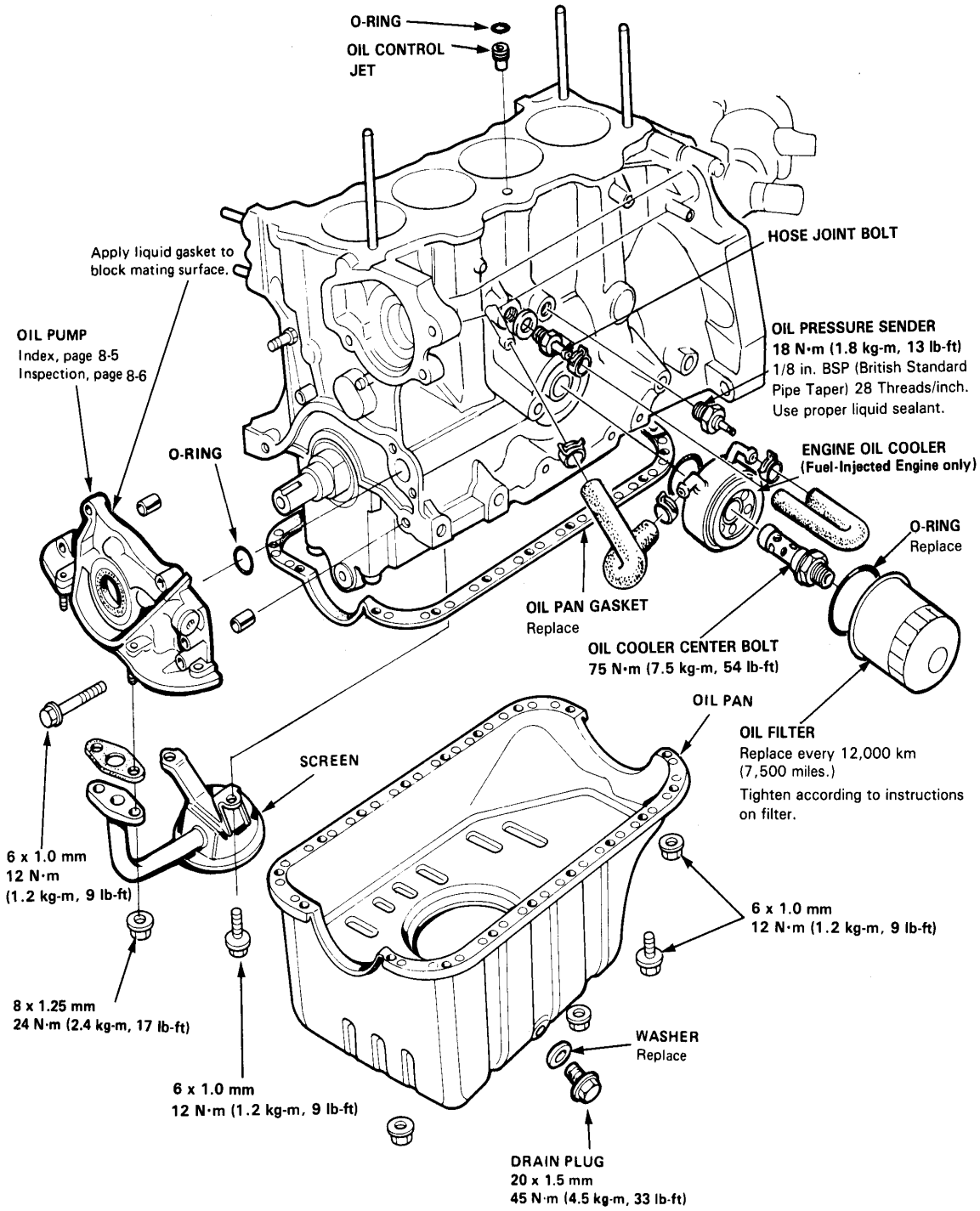

Engine Oil

Level Inspection

1. Check engine oil with the engine off and the car parked on level ground.
2. Make certain that the oil level indicated on the dipstick is between the upper and lower marks.
3. If the level has dropped close to the lower mark, add oil until it reaches the upper mark.

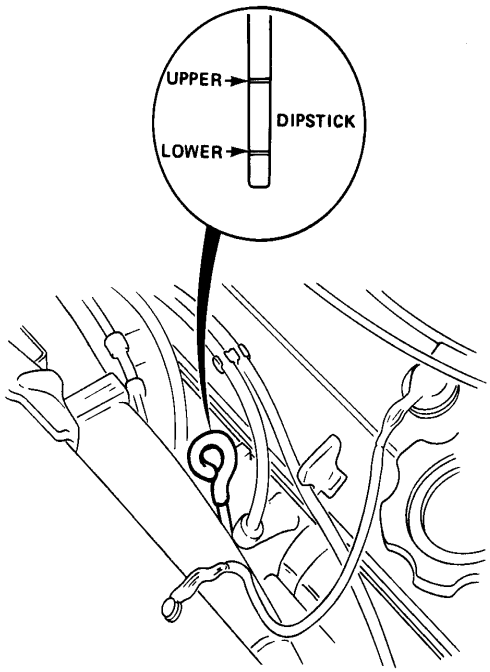

Replacement

1. Warm up the engine.
2. Drain the engine oil.

   NOTE: Remove the filler cap to speed draining.

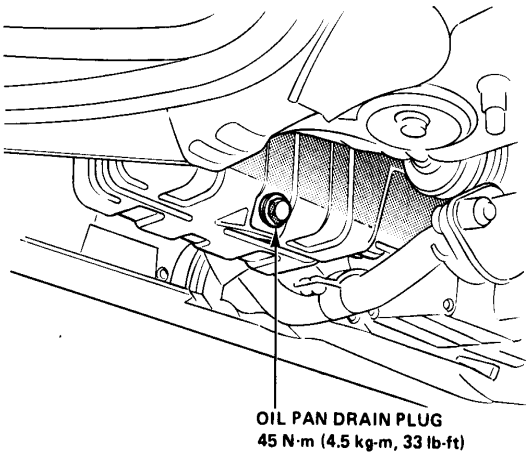

3. Reinstall the drain plug with a new washer, and refill with the recommended oil.

Requirement	"Fuel Efficient" SF Grade only
Capacity	3.7 U.S. qt (3.5 ℓ) at change, including filter. 4.0 U.S. qt (3.8 ℓ) after engine overhaul.
Change	Every 12,000 km (7,500 miles)

Engine Oil Viscosity for Outside Temperature Ranges.

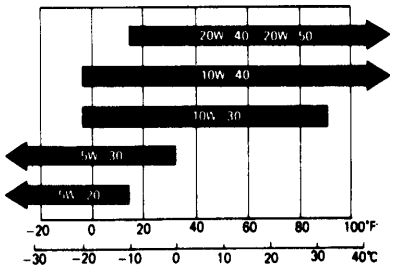

NOTE: Oil filter should be replaced at each oil change.

Oil Filter

Replacement

CAUTION: After the engine has been run, the exhaust pipes will be hot; be careful when working around the exhaust manifold.

1. Remove the oil filter with the special oil filter socket.

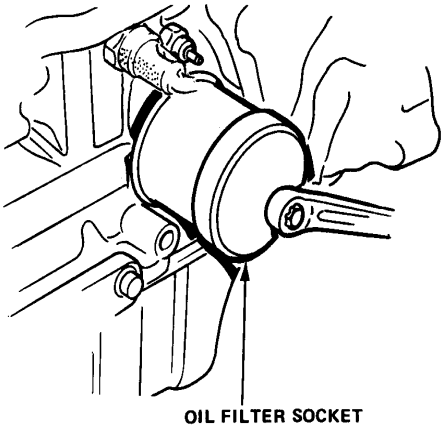

OIL FILTER SOCKET
28 N·m (2.8 kg-m, 20 lb-ft)

2. Inspect the threads and gasket on the new filter. Wipe off seat on engine block, then apply a light coat of oil to gasket, and install filter. Tighten according to instructions on, or with, the filter.

   NOTE: Use only filters with a built-in bypass system.

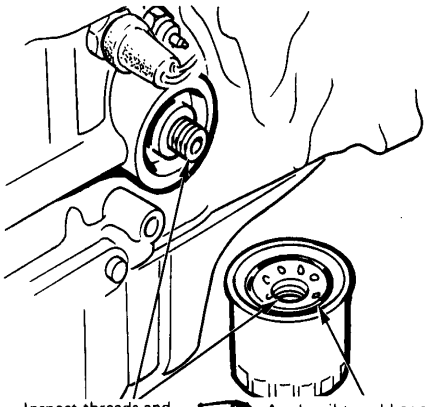

Inspect threads and gasket surface.

Apply oil to rubber seal before installing.

Oil Pressure

Test

If the oil pressure warning light stays on with the engine running. Check the engine oil level. If the oil level is correct:

1. Remove the oil pressure sender and install an oil pressure gauge.
2. Start the engine and allow to reach operating temperature (fan comes on at least twice).
3. Pressure should be:

   Engine Oil Pressure:

   At Idle: **147 kPa (1.5 kg/cm², 21 psi) minimum**

   At 3,000 rpm: **333–340 kPa (3.4–4.2 kg/cm² 48–60 psi)**

   - If oil pressure is within specifications, replace oil pressure sender and recheck.
   - If oil pressure is NOT within specifications, inspect oil pump (pages 8-6 and 7).

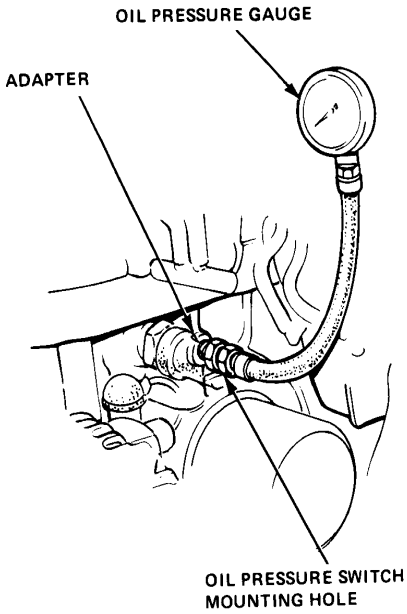

Oil Pump

Illustrated Index

NOTE:
- Note the installation direction of the rotors.
- After assembling, check that the rotors turn smoothly.

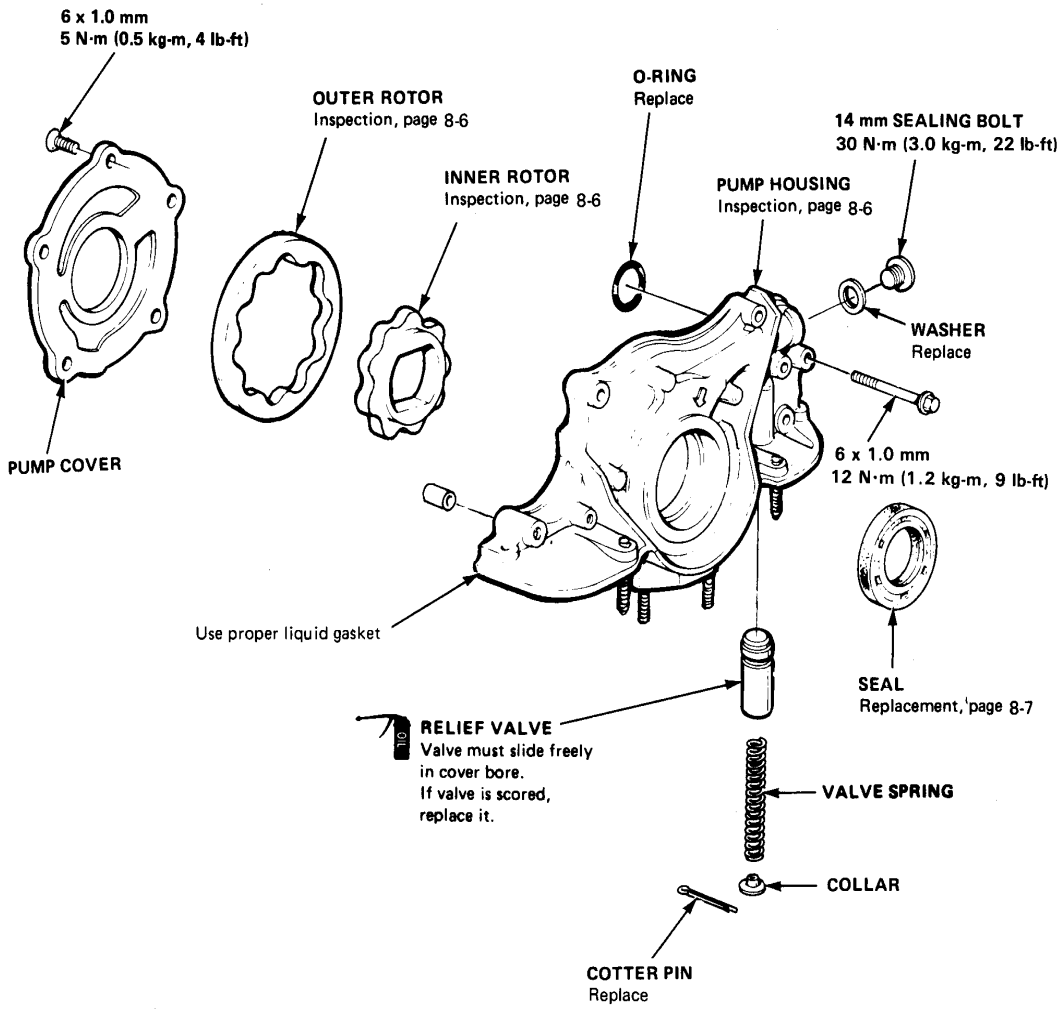

Oil Pump

Removal/Inspection

1. Drain the engine oil.
2. Turn the crankshaft and align the "T" mark on the crankshaft pulley with the index mark on the cover.
3. Remove the cylinder head cover and timing belt upper cover.
4. Remove the alternator belt.
5. Remove the crankshaft pulley and remove the timing belt lower cover.
6. Release the belt tensioner, and remove the timing belt and driven pulley.
7. Remove the oil pan.
8. Remove the oil screen.
9. Remove the mounting bolts and the oil pump assembly.

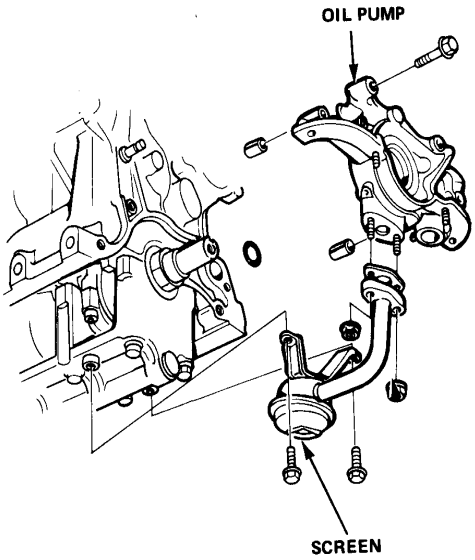

10. Remove the five screws from the pump housing, then separate the housing and cover.
11. Check the radial clearance on the pump rotor.

Rotor Radial Clearance
Standard (New): 0.14 mm (0.006 in.)
Service Limit: 0.2 mm (0.008 in.)

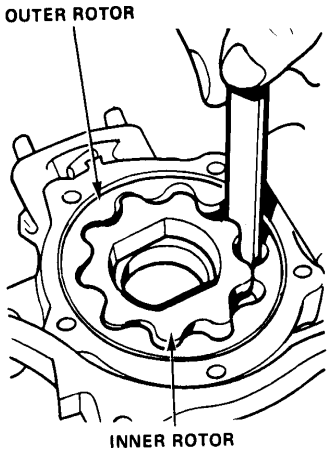

12. Check the axial clearance on the outer pump rotor.

Housing-to-Rotor Axial Clearance
Standard (New): 0.03—0.08 mm (0.001—0.003 in.)
Service Limit: 0.15 mm (0.006 in.)

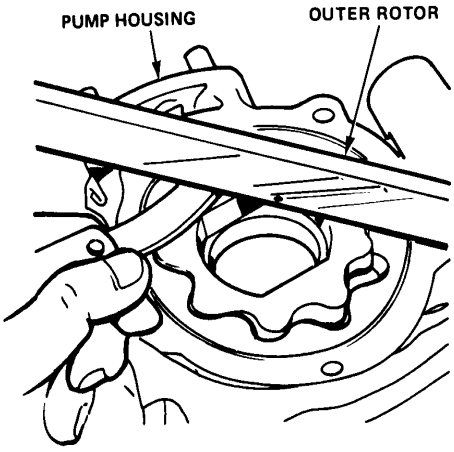

13. Check the radial clearance between the housing and the outer rotor.

Housing-to-Rotor Radial Clearance
Standard (New): 0.1—0.175 mm (0.004—0.007 in.)
Service Limit: 0.2 mm (0.008 in.)

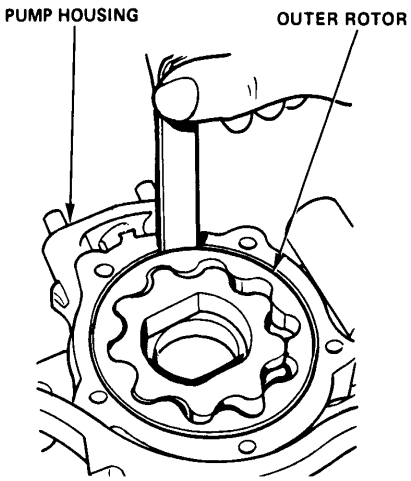

14. Inspect both rotors and pump housing for scoring or other damage. Replace parts as necessary.

15. Remove the old oil seal from the oil pump.

16. Gently tap in the new oil seal until the tool bottoms on the pump.

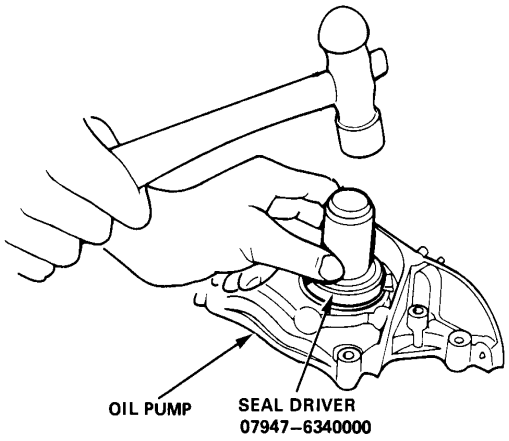

17. Reassemble the oil pump, applying locking fluid to the pump housing screws.

18. Check that the oil pump turns freely.

19. Apply a light coat of oil to the seal lip.

20. Install the two dowel pins and new O-ring on the cylinder block.

21. Apply liquid gasket to the cylinder block mating surface of the oil pump.

NOTE:
- Use HONDA PART NO. 08740—99986 for the liquid gasket.
- Check that the mating surfaces are clean and dry before applying liquid gasket.
- Apply liquid gasket evenly, in a narrow bead centered on the mating surface.
- To prevent leakage of oil, apply sealant to the inner threads of the bolt holes.
- Do not allow the sealant to dry before assembly.
- Wait at least 30 minutes after assembly before filling the engine with oil.

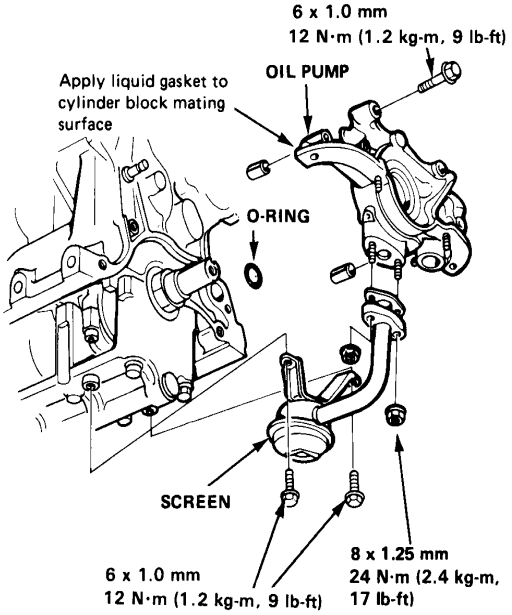

22. Install the oil pump on the cylinder block.

23. Install the oil screen.

Intake Manifold/Exhaust System

Intake Manifold

Illustrated Index

Carbureted Engine

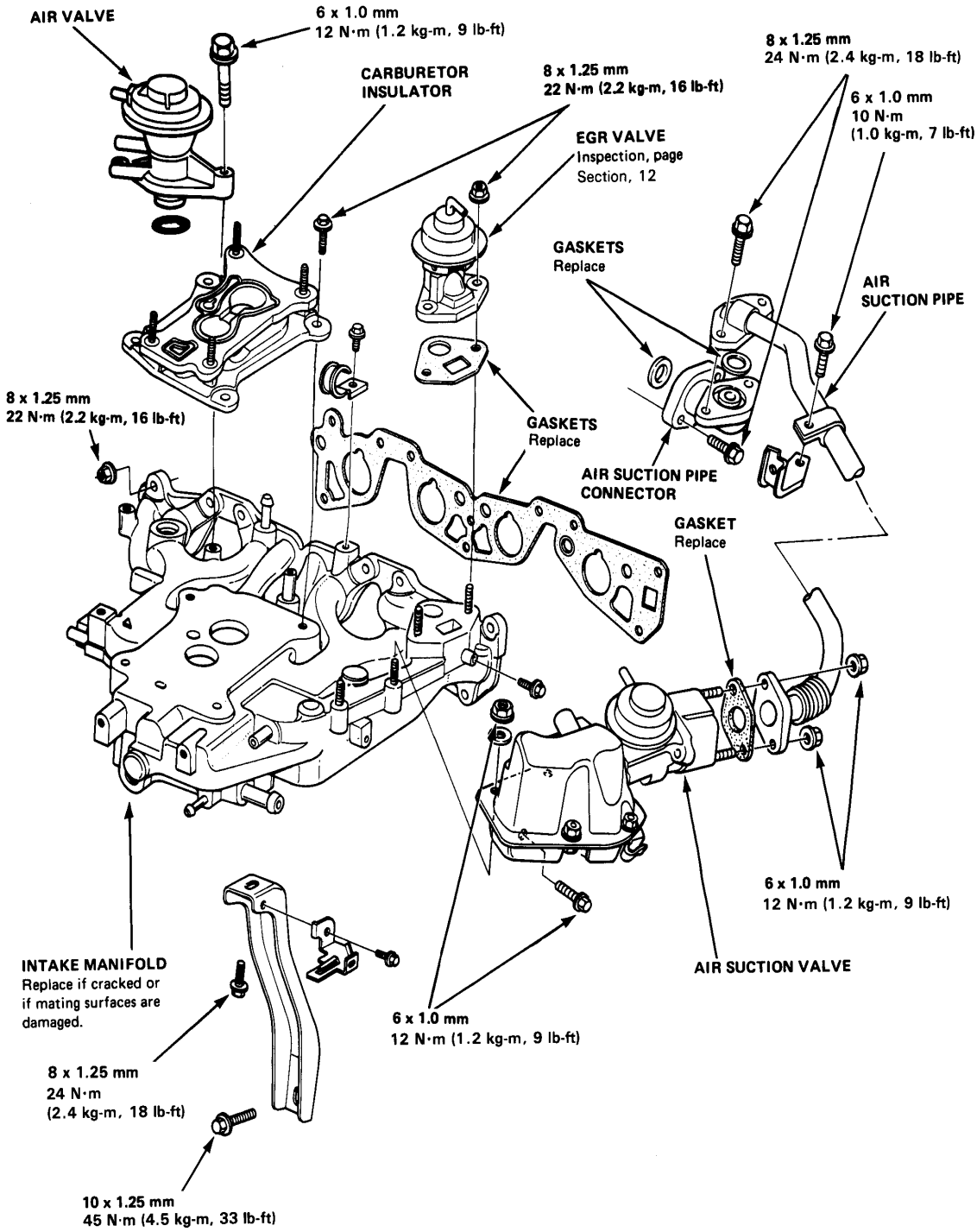

Fuel-Injected Engine

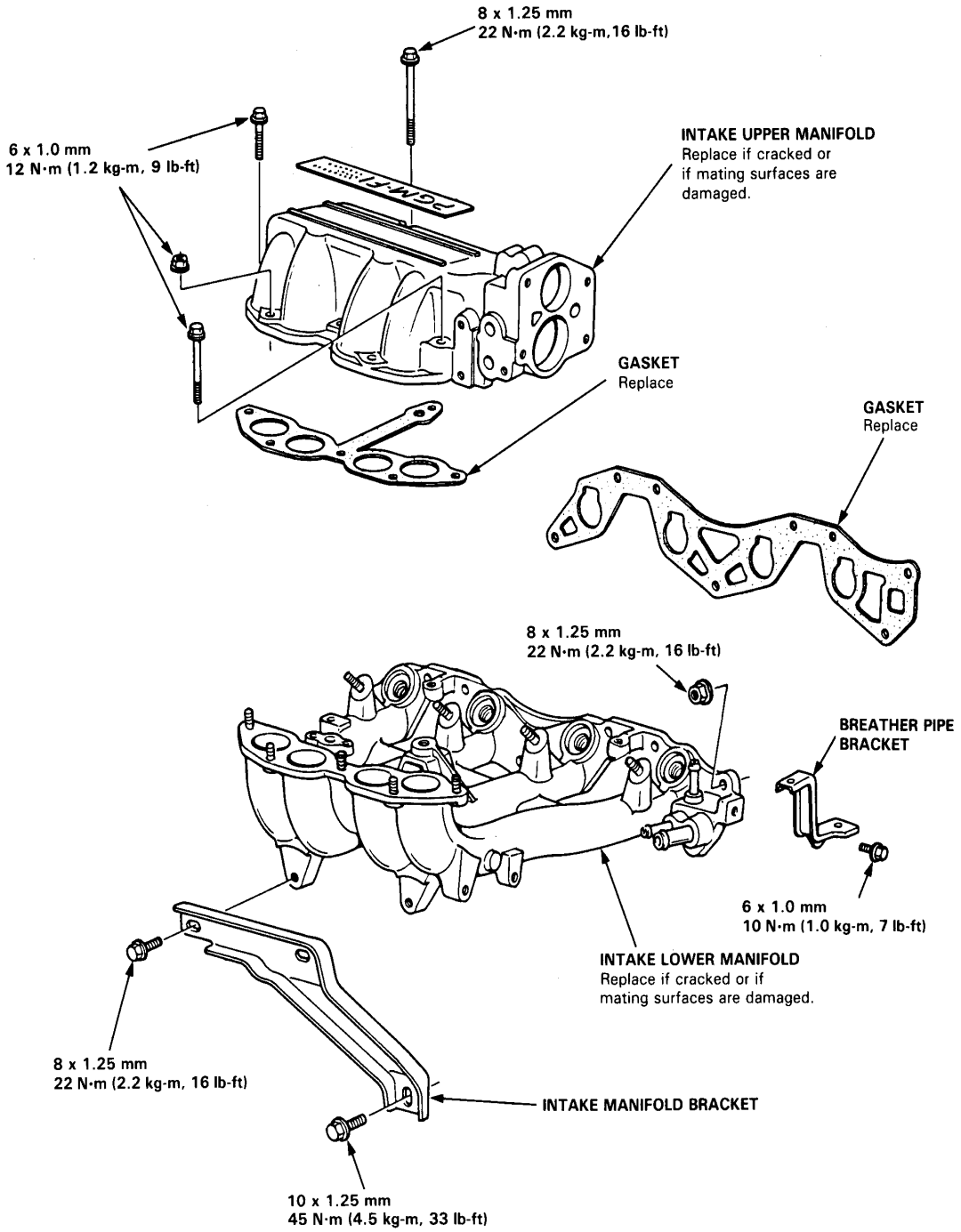

Exhaust Minifold

Illustrated Index

Carbureted Engine
(1500)

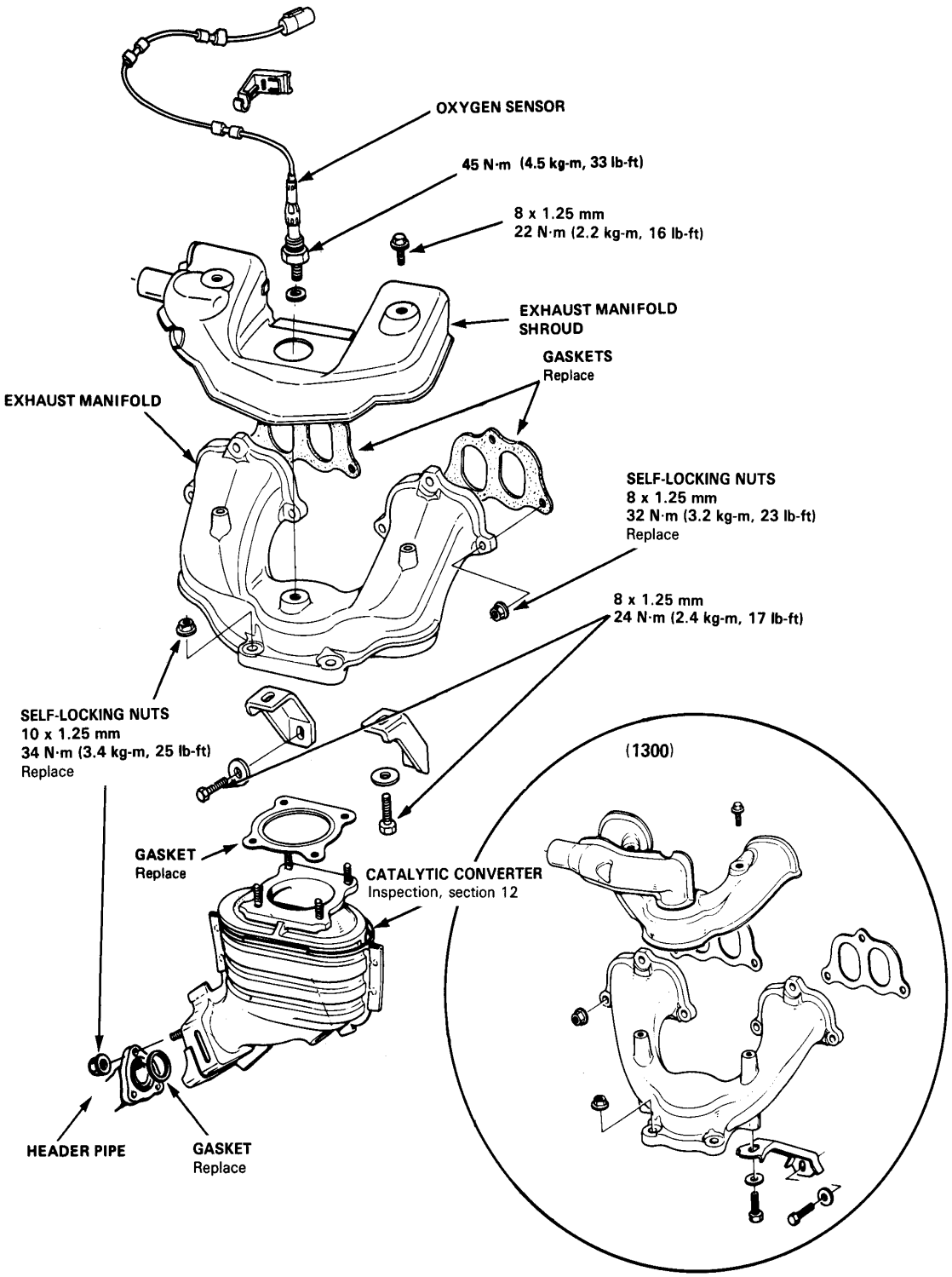

Fuel-Injected Engine

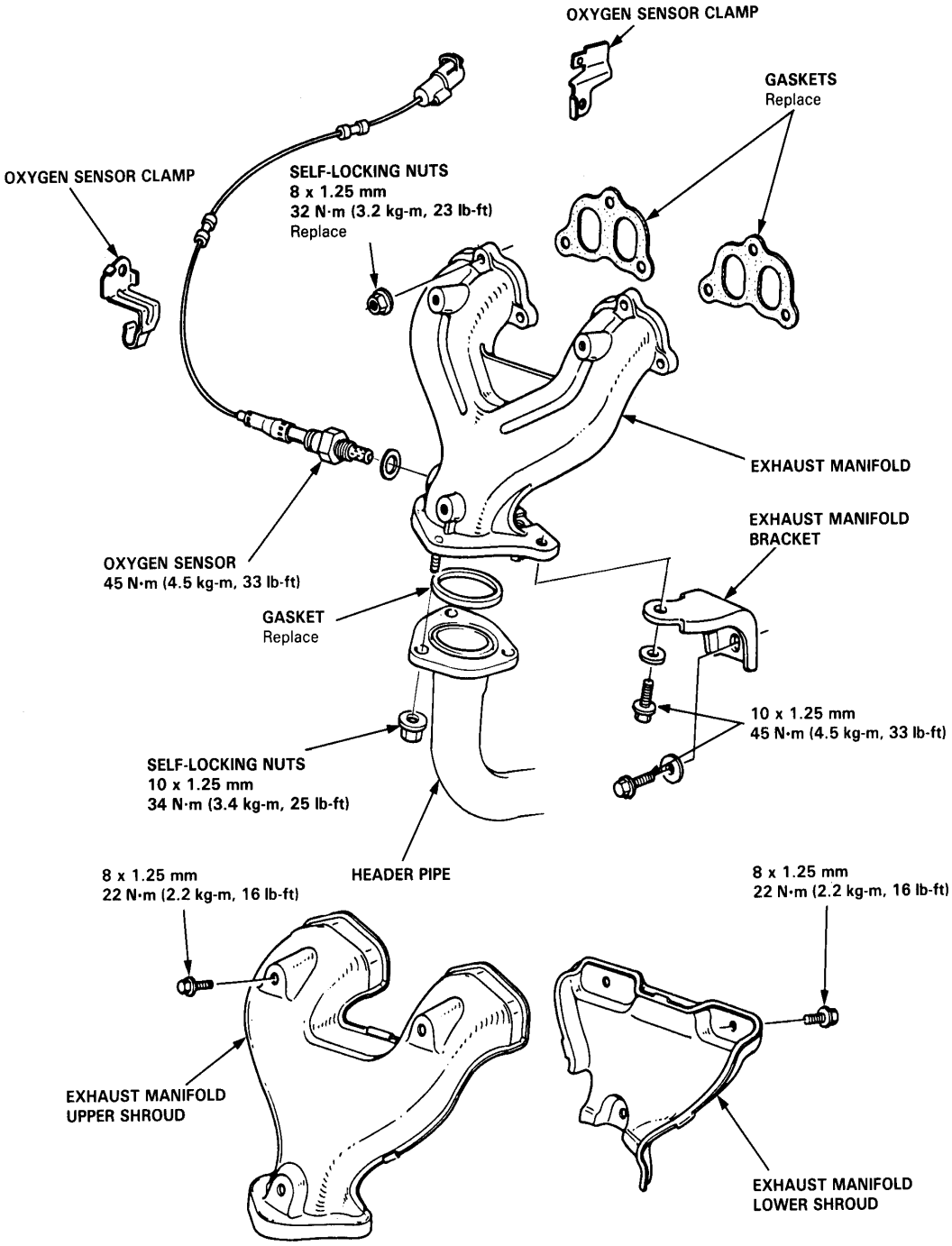

Exhaust Pipe and Muffler

Replacement

All expect Hatchback Si and Wagon 4WD

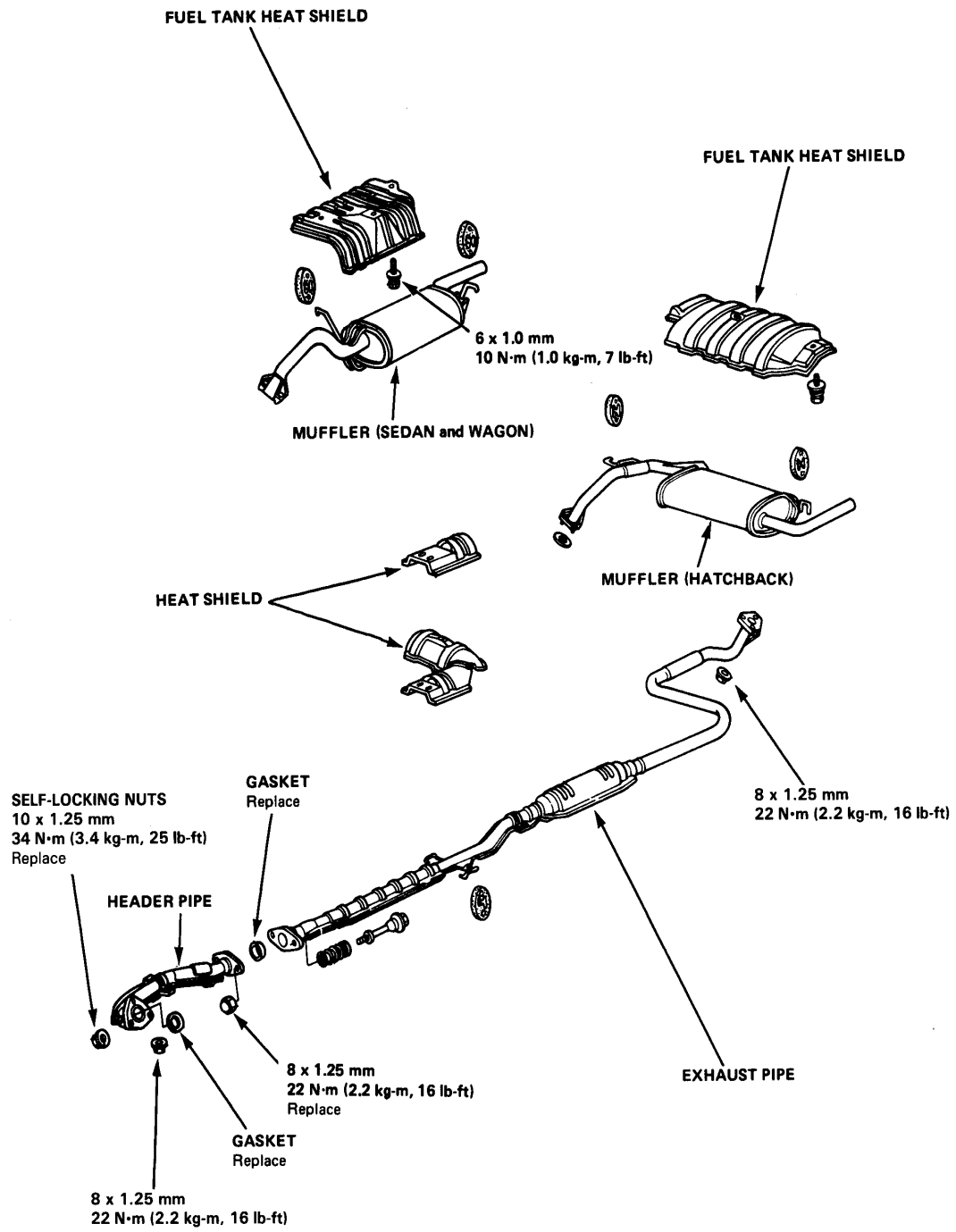

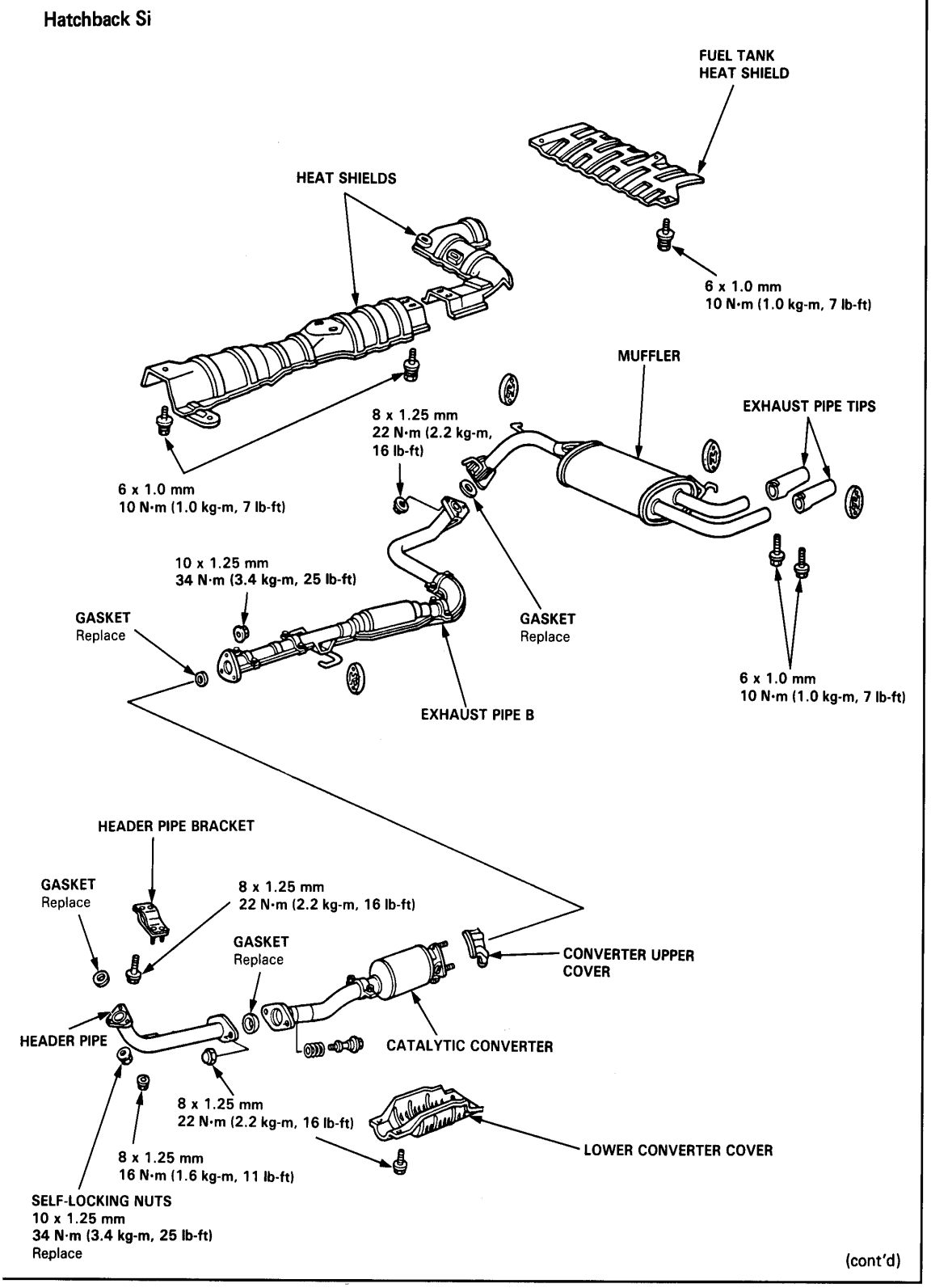
Hatchback Si
FUEL TANK HEAT SHIELD
HEAT SHIELDS
6 x 1.0 mm
10 N·m (1.0 kg-m, 7 lb-ft)
MUFFLER
EXHAUST PIPE TIPS
8 x 1.25 mm
22 N·m (2.2 kg-m, 16 lb-ft)
6 x 1.0 mm
10 N·m (1.0 kg-m, 7 lb-ft)
10 x 1.25 mm
34 N·m (3.4 kg-m, 25 lb-ft)
GASKET
Replace
GASKET
Replace
6 x 1.0 mm
10 N·m (1.0 kg-m, 7 lb-ft)
EXHAUST PIPE B
HEADER PIPE BRACKET
GASKET
Replace
8 x 1.25 mm
22 N·m (2.2 kg-m, 16 lb-ft)
GASKET
Replace
CONVERTER UPPER COVER
HEADER PIPE
CATALYTIC CONVERTER
8 x 1.25 mm
22 N·m (2.2 kg-m, 16 lb-ft)
LOWER CONVERTER COVER
8 x 1.25 mm
16 N·m (1.6 kg-m, 11 lb-ft)
SELF-LOCKING NUTS
10 x 1.25 mm
34 N·m (3.4 kg-m, 25 lb-ft)
Replace

(cont'd)

Exhaust Pipe and Muffler

Replacement (cont'd)

Wagon 4WD

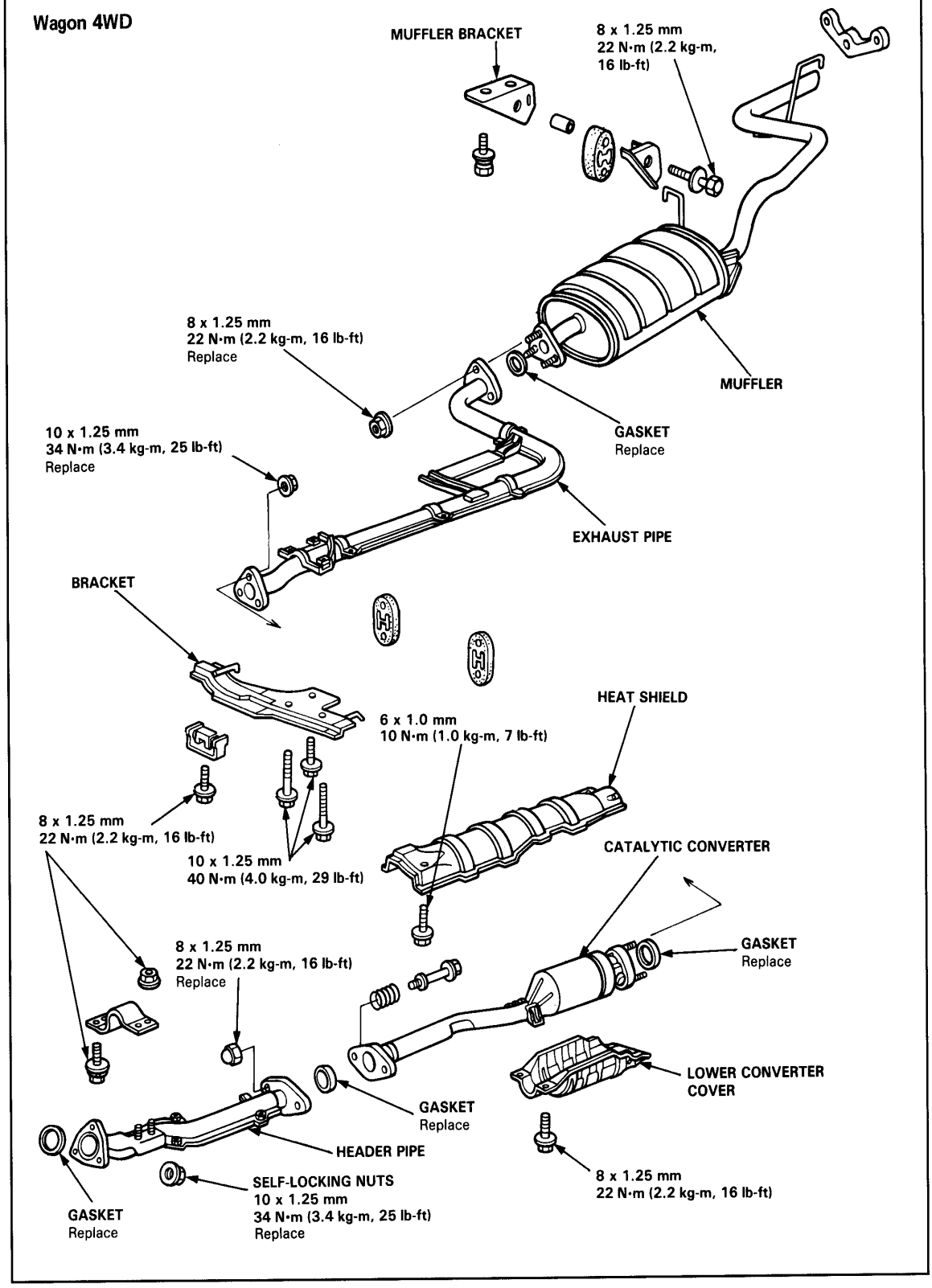

9-8

Cooling

Radiator

Replacement

WARNING **System is under high pressure when engine is hot.**
To avoid danger of releasing scalding coolant, remove cap only when engine is cool.

Total cooling System Capacity (Incl. heater, incl. reservoir tank)
1500: 5.1 liter (1.3 U.S. gal.)
1300: 4.0 liter (1.1 U.S. gal.)

CAUTION: If any coolant spills on painted portions of the body, rinse it off immediately.

NOTE:
- Check all cooling system hoses for damage, leaks or deterioration and replace if necessary.
- Check all hose clamps and retighten if necessary.
- Use new O-rings whenever reassembling.

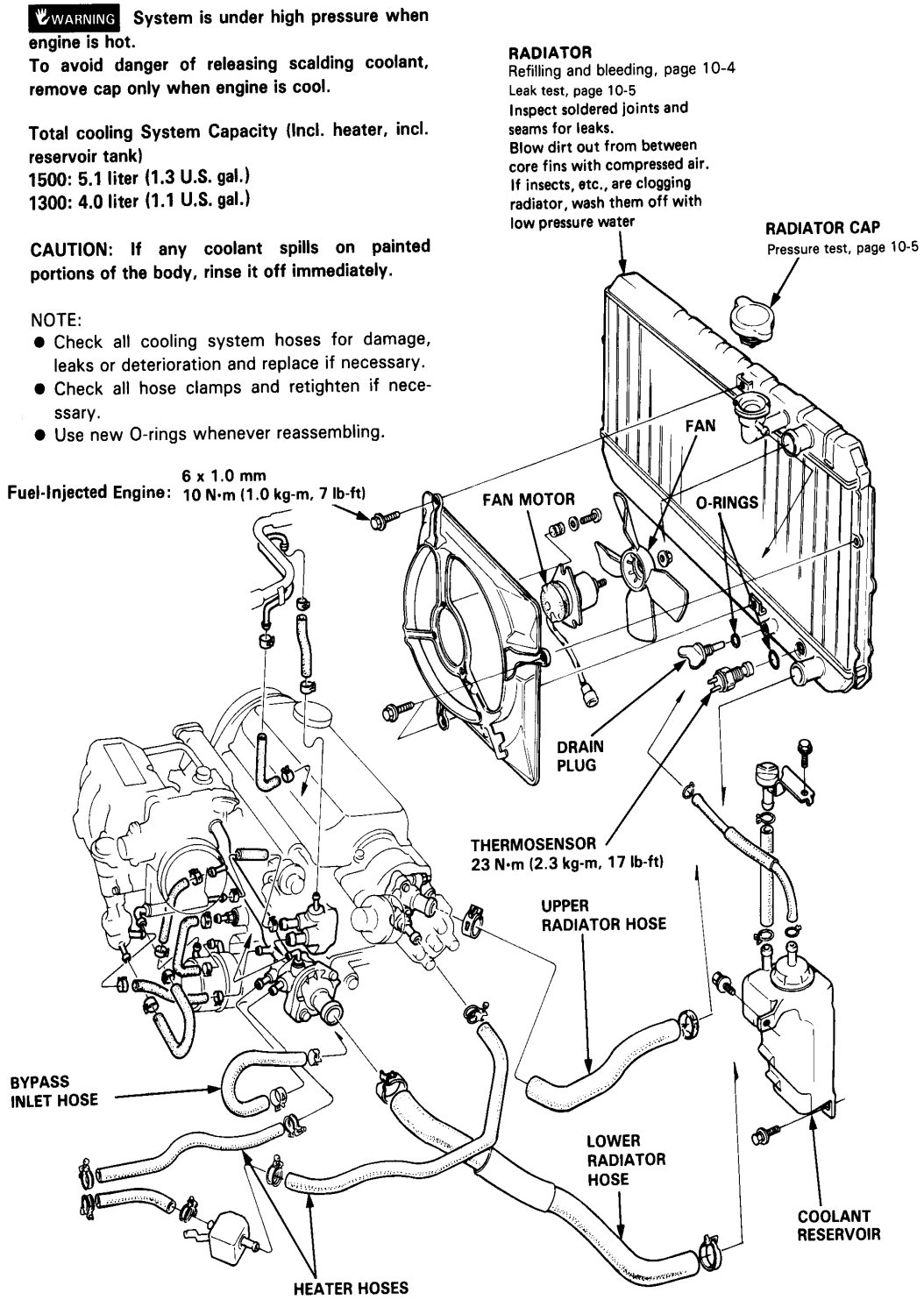

Carbureted Engine:

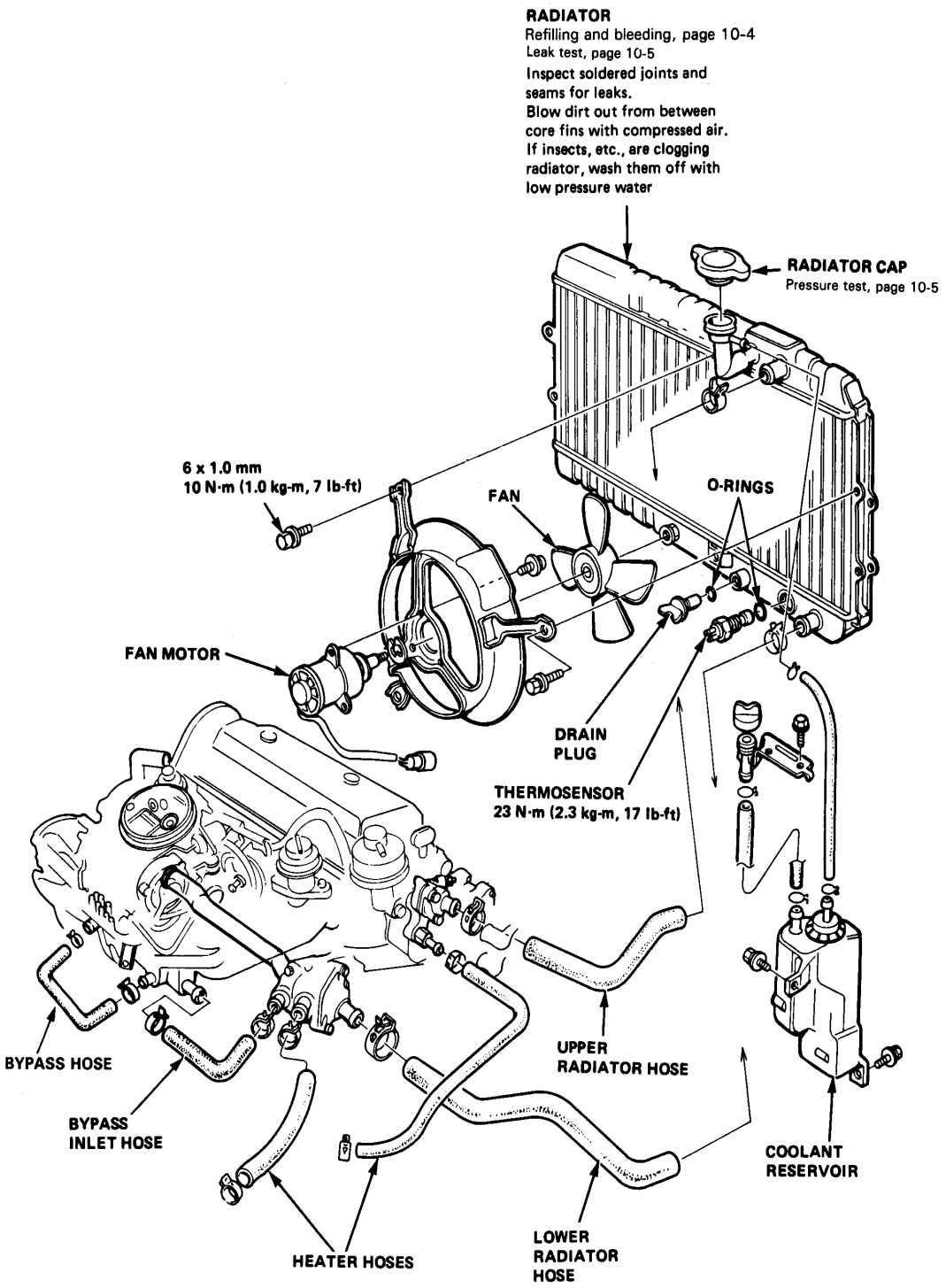

Radiator

Refilling and Bleeding

1. Set the heater temperature lever to maximum heat.

2. When the radiator is cool, remove the radiator cap and drain plug, and drain the radiator.

3. Reinstall the radiator drain plug and tighten it securely.

4. Remove, drain and reinstall the reserve tank. Fill the tank halfway to the MAX mark with water, then up to the MAX mark with coolant.

5. Mix the recommended anti-freeze with an equal amount of water, in a clean container.

   NOTE:
   - Use only HONDA-RECOMMENDED anti-freeze/coolant.
   - For best corrosion protection, the coolant concentration must be maintained year-round at 50% MINIMUM. Coolant concentrations less than 50% may not provide sufficient protection against corrosion or freezing.
   - Coolant concentrations greater than 60% will impair cooling efficiency and are not recommended.

   CAUTION:
   - **Do not mix different brand anti-freeze/coolants.**
   - **Do not use additional rust inhibitors or anti-rust products; they may not be compatible with the recommended coolant.**

   Radiator Coolant Refill Capacity

   1500: 4.5 liters (1.2 U.S. gal.)
   1300: 3.4 liters (0.9 U.S. gal.)

6. Loosen the air bleed bolt in the water outlet, then fill the radiator to the bottom of the filler neck with the coolant mixture. Tighten the bleed bolt as soon as coolant starts to run out in a steady stream without bubbles.

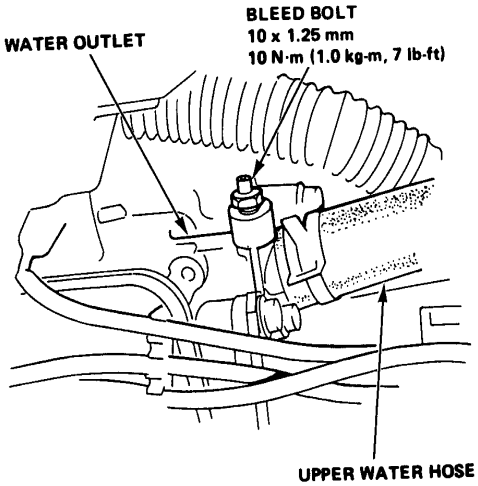

7. With the radiator cap off, start the engine and let it run until warmed up (fan goes on at least twice). Then, if necessary add more coolant mix to bring the level back up to the bottom of the filler neck.

8. Put the radiator cap on, then run the engine again and check for leaks.

Cap Testing

1. Remove the radiator cap, wet its seal with coolant, then install it on the pressure tester.
2. Apply a pressure of 74—103 kPa (0.75—1.05 kg/cm^2, 11—15 psi).
3. Check for a drop in pressure.
4. If the pressure drops, replace the cap.

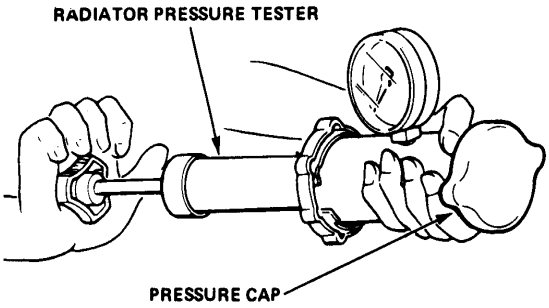

Radiator Testing

1. Wait until the engine is cool, then carefully remove the pressure cap and fill the radiator with coolant to the top of the filler neck.
2. Attach the pressure tester to the radiator and apply a pressure of 74—103 kPa (0.75—1.05 kg/cm^2, 11 —15 psi).
3. Inspect for coolant leaks and a drop in pressure.
4. Remove the tester and reinstall the pressure cap.

   NOTE: Check for engine oil in coolant and/or coolant in engine oil.

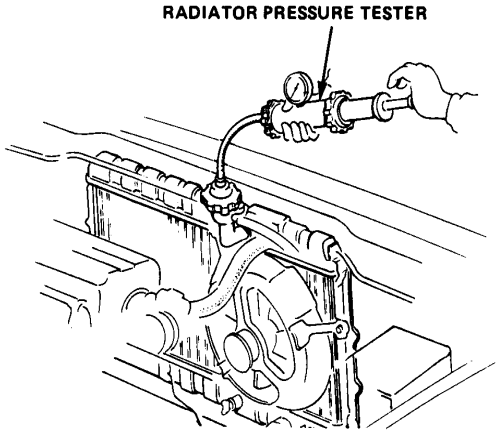

Thermostat

Replacement

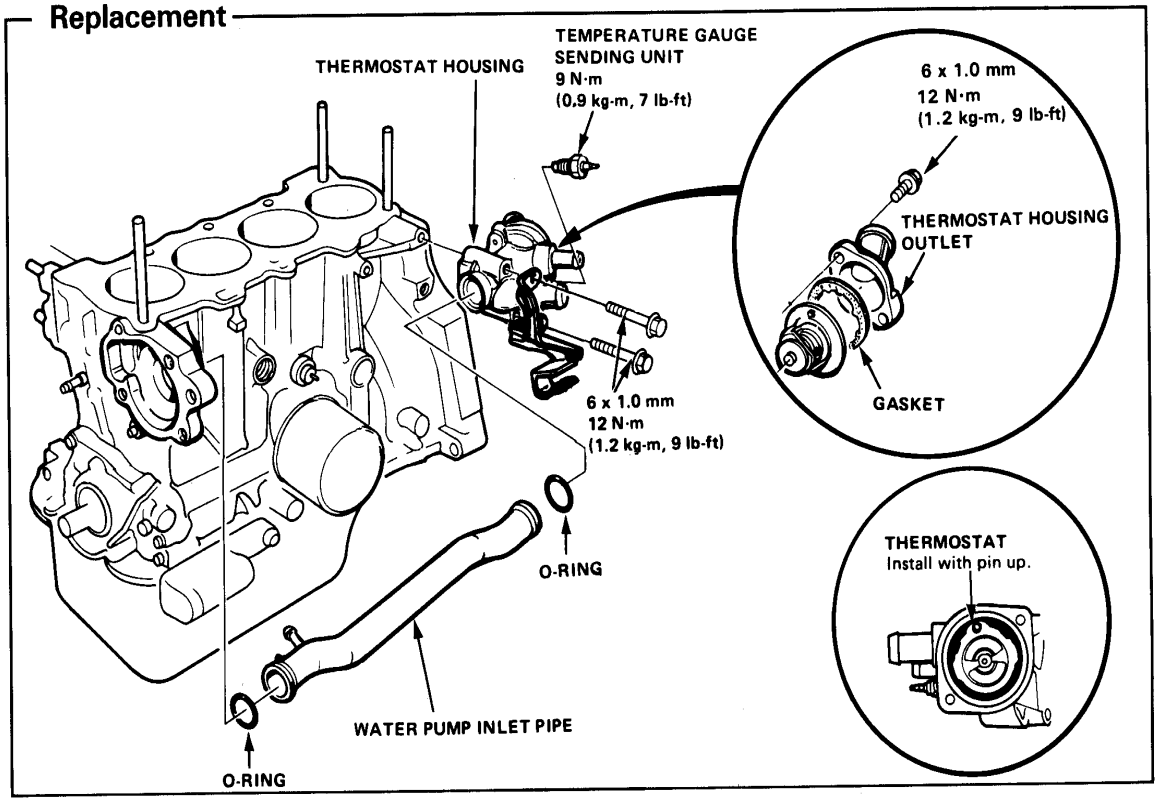

Testing

Replace thermostat if it is open at room temperature.

To test a closed thermostat:

1. Suspend the thermostat in a container of water as shown.
2. Heat the water and check the temperature with a thermometer. Check the temperature at which the thermostat first opens and at full lift.

   CAUTION: Do not let thermometer touch bottom of hot container.

3. Measure lift height of thermostat when fully open.

   STANDARD THERMOSTAT

Lift height:	**8 mm (0.32 in.)**
Stars opening:	**76–80°C (169–176°F)**
Fully open:	**91°C (196°F)**

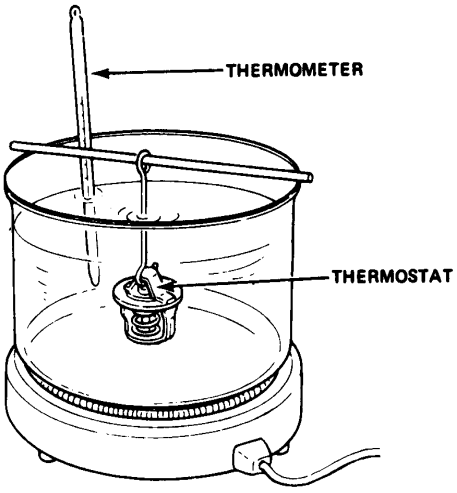

Water Pump

Replacement

NOTE: Use new gaskets and O-rings whenever reassembling.

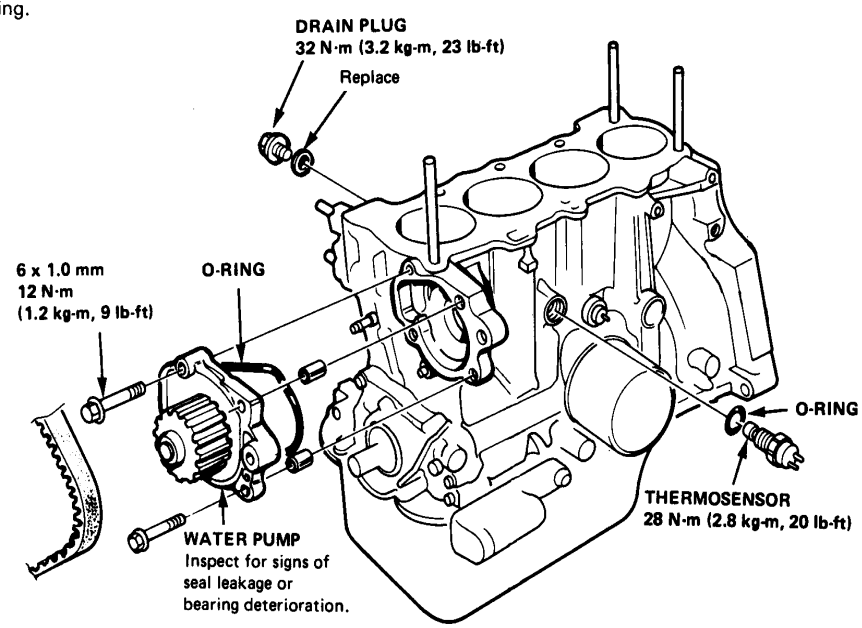

Carbureted Engine

Description

Automatic Choke

This system provides easy engine starting under a wide range of air temperatures.

The system consists of the following:
a) The choke valve and its linkage system
b) The choke heater electrical circuit
c) The choke opener (page 11-3)
d) The fast idle and fast idle unloader system (page 11-3)

The choke valve is located in the primary throttle bore of the carburetor. When the engine is not running, the chokevalve angle is determined by the bimetallic coil spring acting against the choke return spring. When the engine is running, the choke opener also affects the choke valve angle.

When the engine is started, electric current supplied to the main choke heater causes the bimetallic coil spring to open the choke valve. As the air temperature in the choke cap rises, the thermal switch turns on and electric current is also directed to the secondary choke heater. This speeds the opening of the choke valve during its final stages. The combination of heater and thermistor keeps the bimetallic coil spring at a constant high temperature.

The choke opener adjusts the choke valve for increased air flow once the engine begins to fire. It operates in two steps according to coolant temperature and operates independently of the fast idle setting.

The fast idle unloader operates in two steps according to the characteristics of thermovalves A and B, which sense the engine coolant temperature differently.

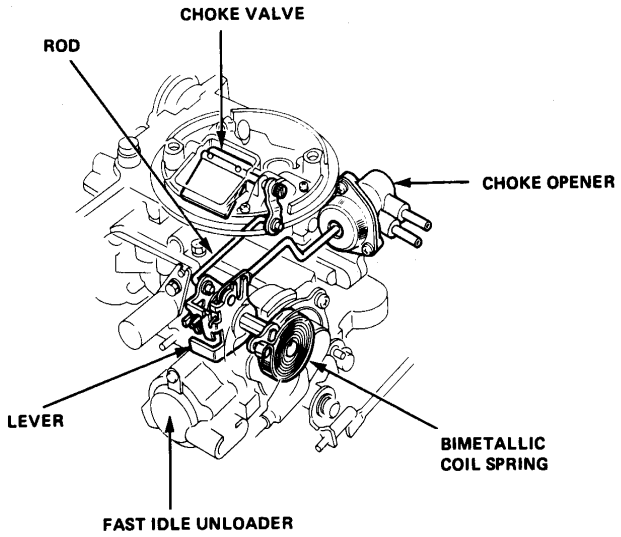

Choke Opener System

Fast Idle Unloader

The fast idle cam is engaged and disengaged by depressing the accelerator pedal, and is also disengaged by the fast idle unloading mechanism.

The unloading mechanism consists of a fast idle unloader, and thermovalves A and B. The unloader has two diaphragms to release the throttle valve in two steps. When the coolant temperature reaches the set temperature of thermovalve B, it closes to shut off the vacuum bleed. This allows the inside diaphragm of the unloader to retract to the first step by manifold vacuum. Then, as the coolant temperature rises further and reaches the set temperature of thermovalve A, it closes and manifold vacuum is applied to the outside diaphragm of the unloader. This allows the unloader to operate on the second step.

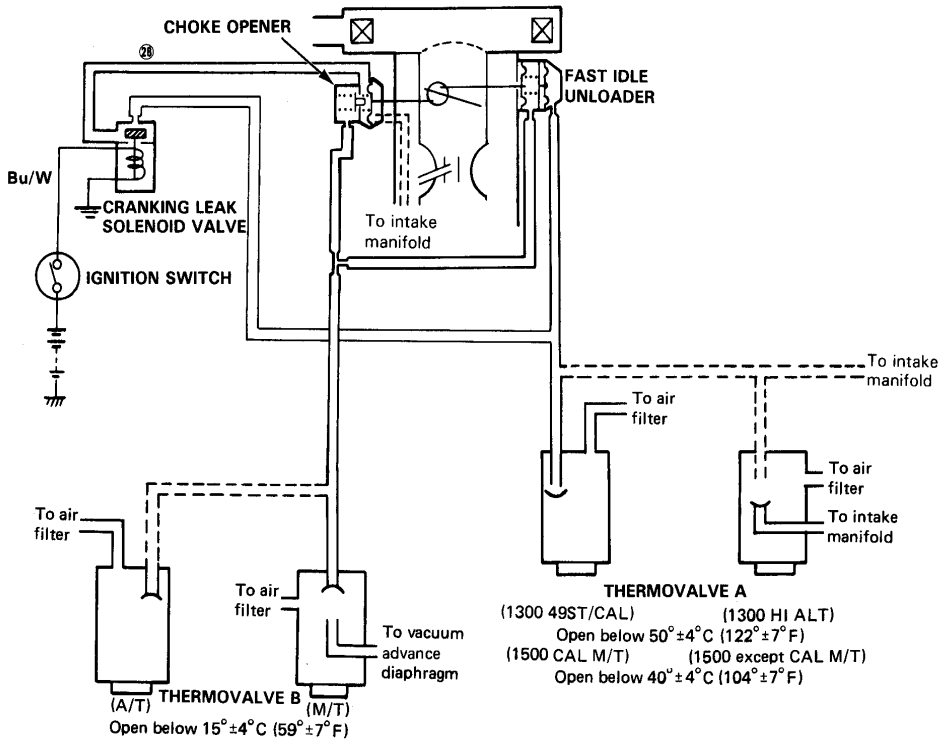

Choke Opener

This system is designed to promote easy starting. When starting the engine, manifold vacuum is transmitted to the choke opener; thus the choke valve is opened a fixed amount.

When cranking the engine to start, the cranking leak solenoid valve is activated and manifold vacuum is released from the valve so that the choke opener does not operate.

Thermovalve B works to open the choke valve in response to engine coolant temperature. When the engine coolant temperature is below the set temperature of thermovalve B, it opens and manifold vacuum is bled from the valve. In this situation the choke opener diaphragm is retracted to an intermediate position because of the balance between the vacuum and the spring force of the choke opener.

When the engine coolant temperature exceeds the set temperature of thermovalve B, it closes to shut off the vacuum bleed and this allows the choke opener to retract fully and pull the choke valve open.

Description

Carburetor

Accelerator Pump

The accelerator pump supplies the extra fuel necessary to maintain the ideal air/fuel mixture when the accelerator pedal is depressed suddenly at low engine speeds.

When the accelerator pedal is depressed, the pump rod, which is connected to the throttle lever, pushes down on the accelerator pump diaphragm. This opens the outlet check valve and allows fuel to be pumped up to the accelerator pump nozzle, where it is sprayed into the carburetor's primary throat.

When the accelerator pedal is released, the accelerator pump diaphragm is pushed up by its spring and this closes the outlet check valve. Fuel, from the float chamber, flows into the accelerator pump chamber through the inlet check valve so that the pump will be ready when the accelerator pedal is again depressed suddenly.

The fuel flow from the accelerrator pump is further regulated by the temperature-sensitive bypass valve in the carburetor. When the engine is cold, the bypass portion of the valve is closed so that the accelerator pump nozzle will get the maximum of fuel available. When the engine warms up to its normal operating temperature, the bypass valve opens and this allows some of the fuel, which would ordinarily be routed to the nozzle, to be bled back into the float chamber of the carburetor.

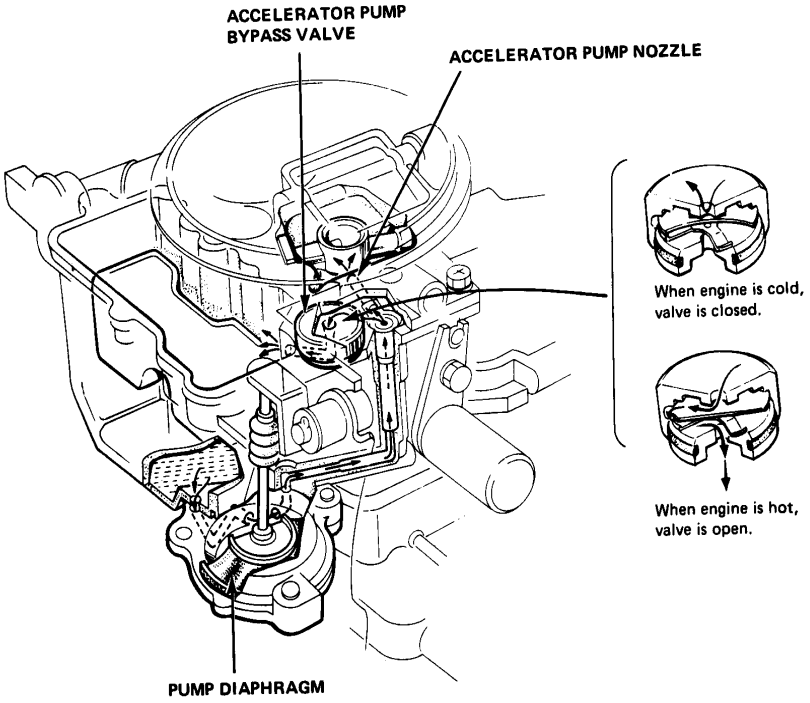

Carburetor Heat Riser

A heat riser, utilizing engine coolant, is built into the intake manifold to prevent carburetor icing and to improve cold driveability. This improves air-fuel mixture automization. Since excessive heat can cause fuel percolation, a bypass valve with a thermostat shuts off coolant flow, at normal operating temperatures.

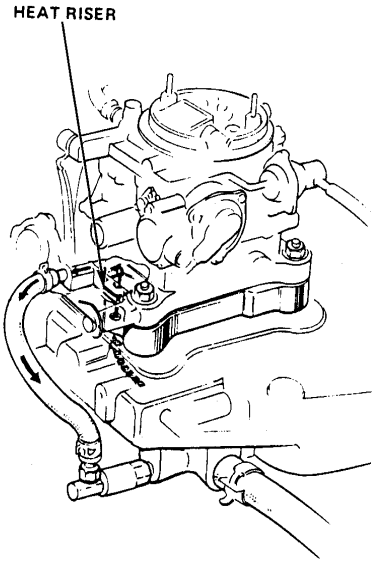

Vacuum Controlled Secondary

The secondary throttle valve is controlled by venturi vacuum, and thermovalve D.
When thermovalve D is below its specified temperature, vacuum to secondary diaphragm is bled to the air cleaner.
Above that temperature, thermovalve D gradually closes the air bleed, and applies venturi vacuum to the secondary diaphragm.

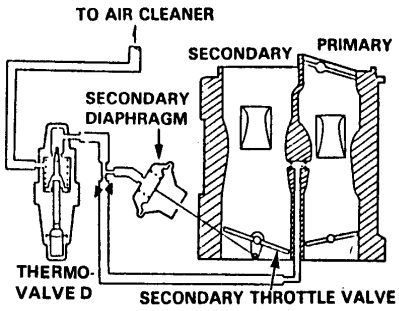

Description

Power Valve

This system provides supplementary fuel to the primary main fuel passage when the car is run in the power mode.

1300

When the intake air temperature is below 15.5°C (60°F), the power valve is open because the power valve control solenoid valve does not allow vacuum to the power valve.
When the vehicle speed is below 10 mph, with the intake air temperature above 15.5°C(60°F), the power valve is open because the power valve control solenoid valve will not allow vacuum to the power valve.
When the vehicle speed exceeds 10 mph, the power valve is then controlled by the signal from vacuum switch B to the power valve control solenoid valve. The power valve control solenoid valve is energized by low manifold vacuum to the vacuum switch.

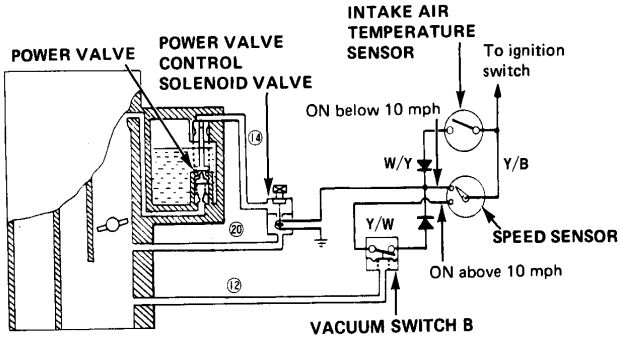

1500

The control unit energizes the power valve control solenoid valve to cut off manifold vacuum to the power valve which supplies supplementary fuel to the primary main fuel passage.

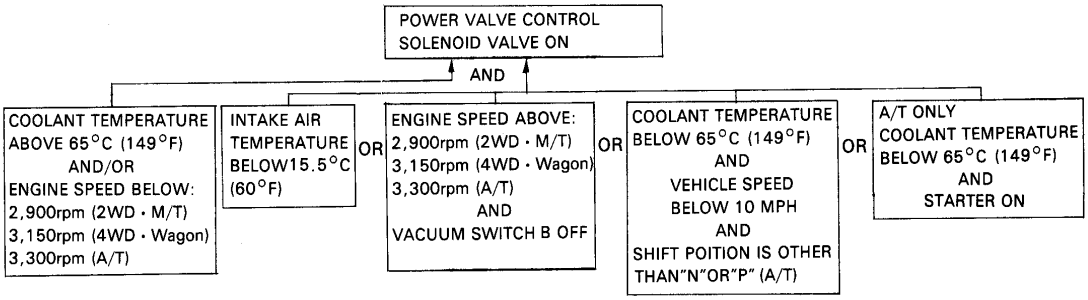

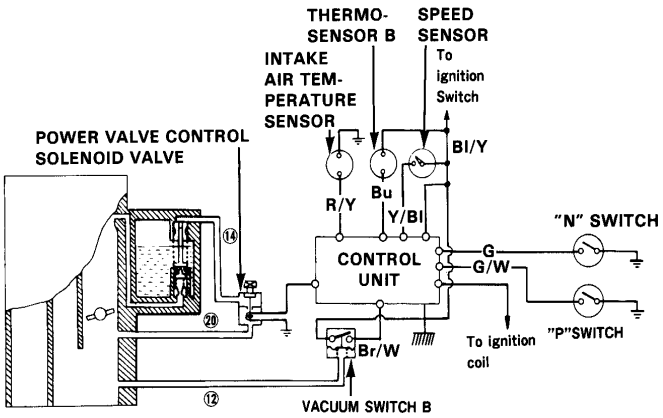

Index

Fuel System

Carburetor Adjustments:

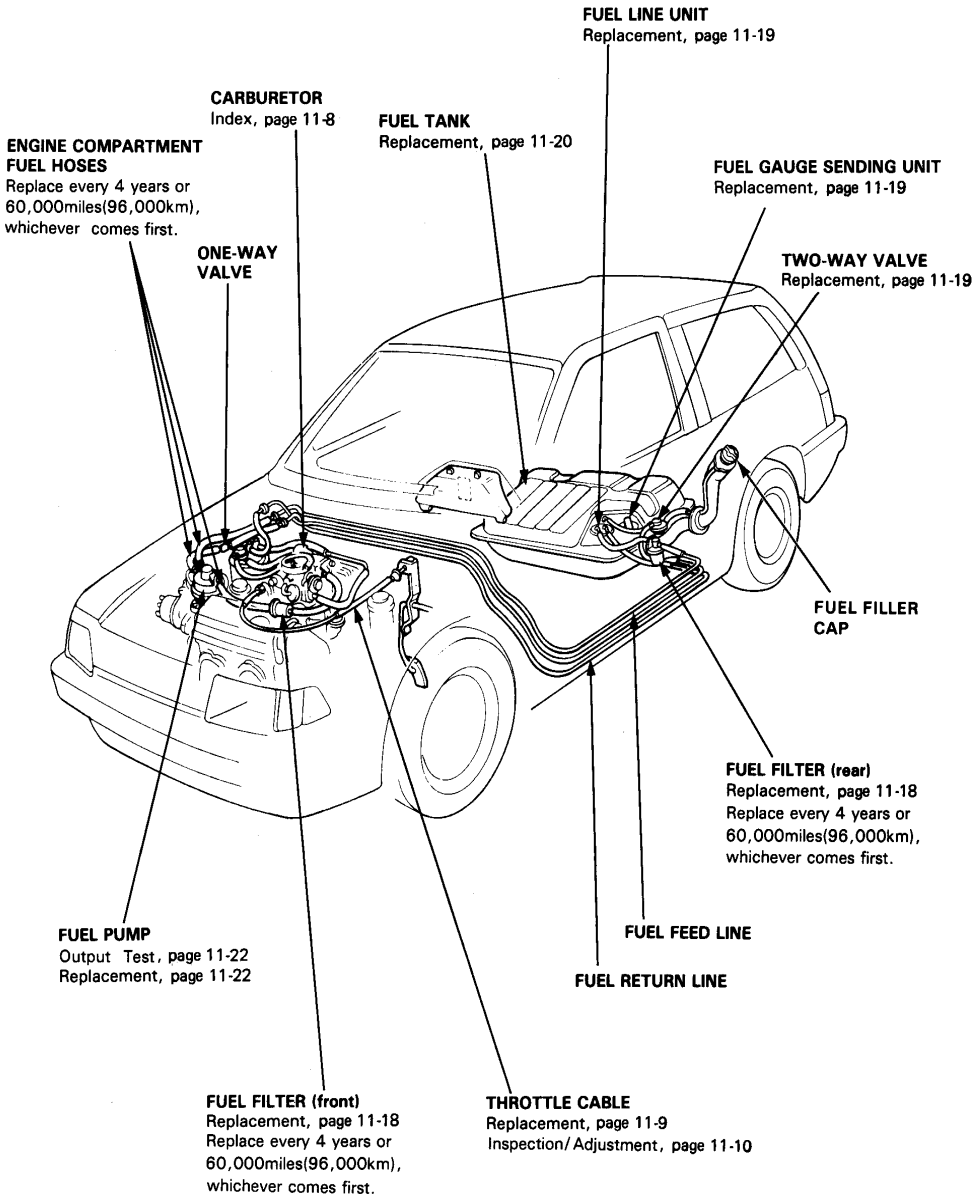

Index

Carbuletor

Carburetor Identification

			CAL	49 ST and HI ALT	
1300			EA18C	EA17B	EA18D
1500	Manual	2WD	EA10C	EA10D	
		4WD	EA22D	EA22C	
	Automatic		EA11C *EA21D	EA11D *EA21C	

* with power steering

NOTE: Use new gaskets and O-rings whenever reassembling.

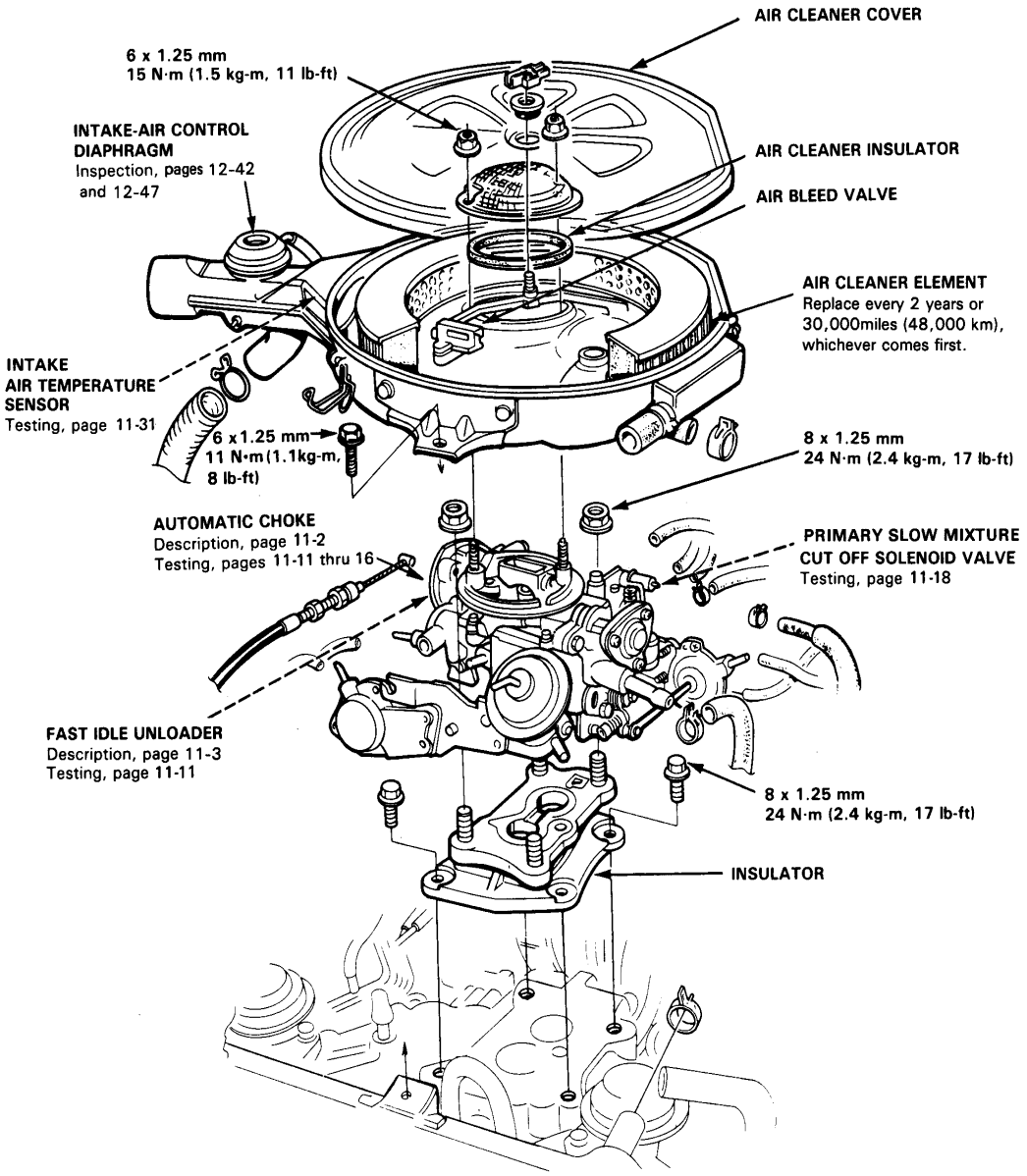

Throttle Cable

Replacement

NOTE : Remove in the numbered sequence shown.

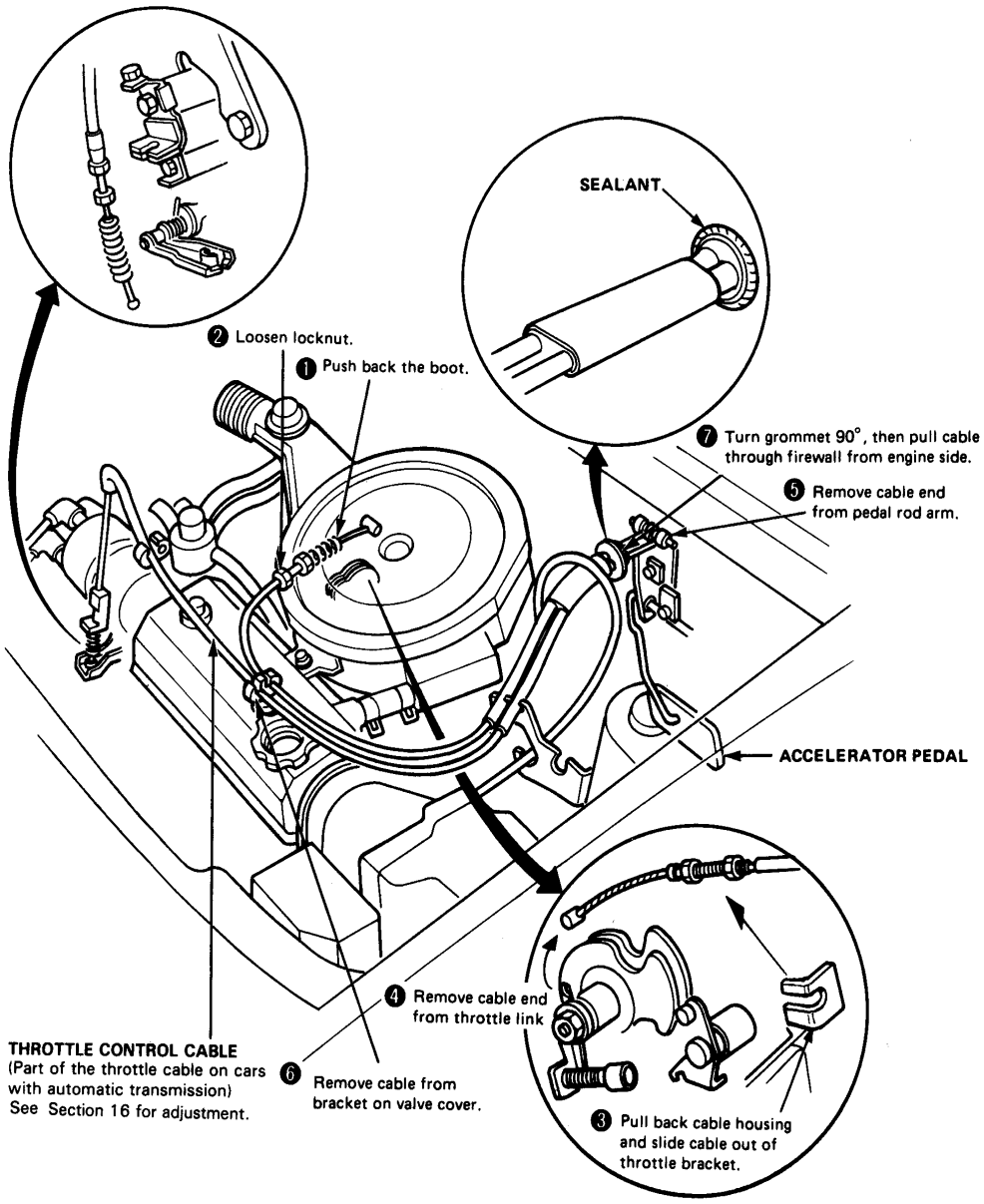

❽ Install the cable in reverse order of removal.
Apply sealant to grommet mating surface, when installing cable.

Throttle Cable

Inspection/Adjustment

1. Warm up engine to normal operating temperature (cooling fan comes on).
2. Check that throttle cable operates smoothly with no binding or sticking. Repair as necessary.
3. Check cable free-play at throttle linkage. Cable deflection should be 4—10 mm (3/16—3/8 in.).

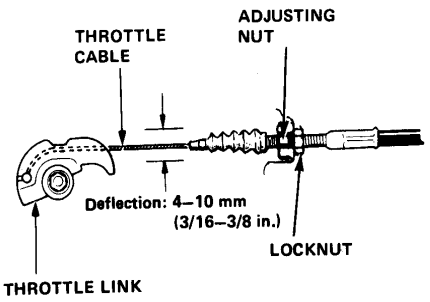

4. If deflection is not within specs, loosen locknut and turn adjusting nut until you can deflect cable as specified. Then tighten locknut.
5. With cable properly adjusted, check throttle valve to be sure it opens fully when you push accelerator pedal to the floor.

NOTE:
- **Check throttle valve to be sure it returns to idle position whenever yor release accelerator.**
- **On cars with A/T, adjust the A/T throttle control cable after adjusting the throttle cable (section 16).**

Installation

1. Disconnect the hose from the throttle controller and connect a hand vacuum pump to the controller, then apply vacuum.

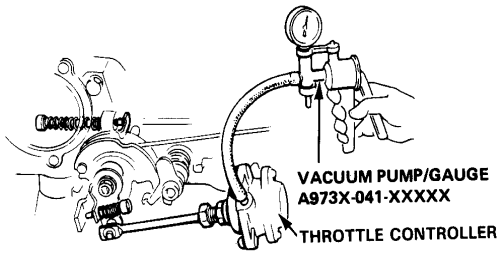

2. Fully open the throttle and choke valves, then close the throttle valve. Now, release the choke valve; the throttle linkage will be off the fast idle cam.
3. Install the throttle cable in the throttle link.

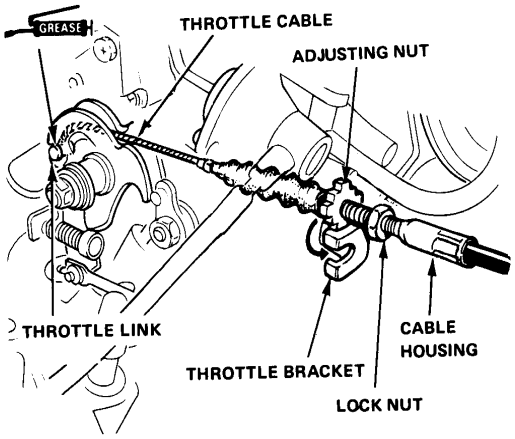

4. Slip the cable housing into the throttle bracket and adjust the cable deflection as described in the previous procedure. Tighten the locknut.
5. Disconnect the hand vacuum pump and reconnect the throttle controller hose.

NOTE: On models with automatic transmission, adjust A/T throttle control cable(section 16).

Automatic Choke

Choke Coil Tension and Linkage

COLD ENGINE

1. Remove the air cleaner.

2. Open and close the throttle fully to let the choke close.

   The choke valve should close completely.

   NOTE: Above about 28°C (82°F), the choke will not close completely, but should still close to less than 3 mm (1/8 in.).

   - If the choke closes properly, go on to the fast idle unloader test in the next column.
   - If the choke does not close properly, spray its linkage with carburetor cleaner, and check it again (use a spray can with an extension on the nozzle to reach the linkage).

   CAUTION: Carburetor cleaner is very caustic; always wear safety goggles or a face shield when spraying.

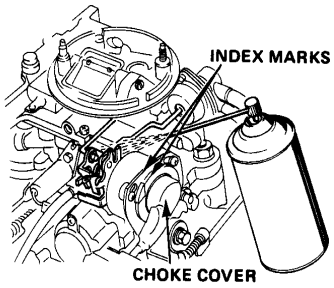

   - If the choke still does not close properly, remove the choke cover (page 11-16) and inspect the linkage for free movement. Repair or replace parts as necessary. Then reinstall the cover and adjust it so the index marks line up, and re-test.
   - If the choke still does not close properly, replace the cover. (page 11-16)

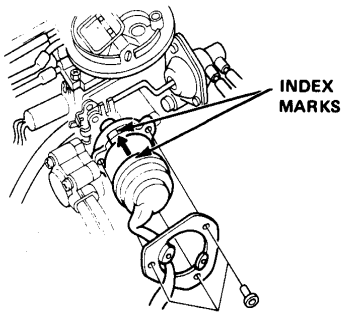

Fast Idle Unloader

COLD ENGINE

1. Disconnect the two hoses from the fast idle unloader.

2. Open and close the throttle fully to engage the fast idle cam.

3. Start the engine.

   The engine should run at fast idle.

   - If the engine has fast idle, go on to step 4.
   - If the engine does not run at fast idle, remove the choke cover (page 11-16) and check the operation of the fast idle cam.

4. Connect a hand vacuum pump to the inside fitting of the unloader and draw vacuum.

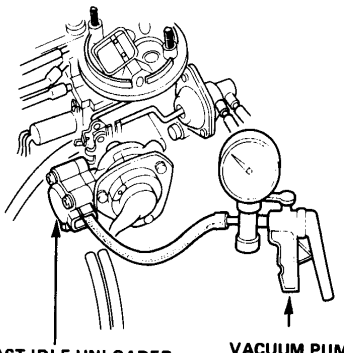

   The fast idle speed should drop.

   - If idle speed drops, go on to page 11-14 for hot engine inspection.
   - If idle speed does not drop, check the unloader for leaks, blockage or damaged diaphragm. Remove the choke cover and check the unloader rod for free movement. Repair or replace as necessary.

5. Reconnect the hoses.

Automatic Choke

Choke Opener

COLD ENGINE

1. Disconnect the choke heater wire.
2. Open and close the throttle fully to let the choke close.
3. Start the engine.
   The choke valve should partially open.
   - If the choke partially opens, go on to step 4 or step 5, depending on coolant temperature.
   - If the choke does not partially open, check the linkage for free movement, repair as necessary, and re-test.
   - If the choke valve still does not partially open, check the choke opener diaphragm: Remove its two screws, and attach a hand vacuum pump to the upper hose fitting. Block the lower fitting and the orifice in the opener while you draw enough vacuum to pull the opener rod all the way in, then stop.

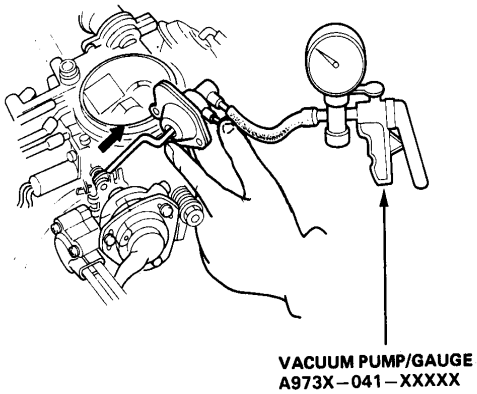

- If the rod will not stay in, replace the opener.
- If the rod stays in, check the vacuum port in the carburetor for blockage. If it is clean, check the cranking leak system (page 11-13).

After replacing or re-installing the choke opener, re-test it, then adjust it if necessary (page 11-15).

4. If coolant temperature is below about 11°C (52°F), Tab A on the choke opener lever should not be seated against the carburetor.

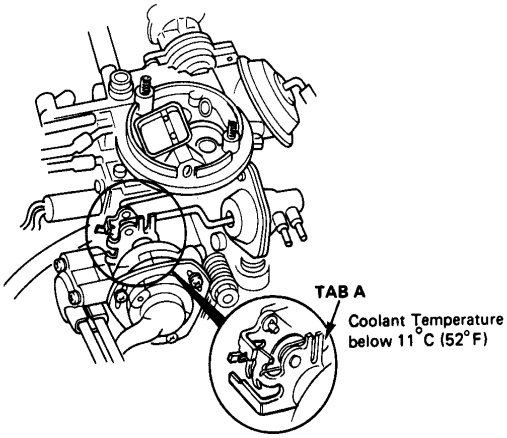

- If Tab A is not seated, go on to step 5.
- If Tab A is seated, disconnect the choke opener hose #18 from upper fitting.

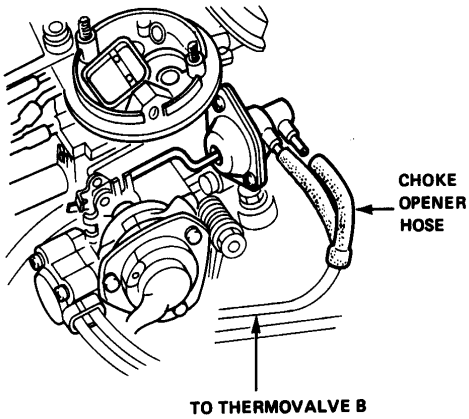

- If Tab A comes off its seat, check line #18 to thermovalve B for blockage and check that the thermovalve is open.

– If Tab A does not come off its seat, press down on the choke opener lever until it does; if it won't stay off, clean out the choke opener fitting with a 0.5 mm (#76) drill bit, then re-test.

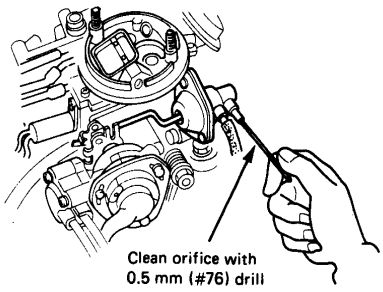

– If Tab A still does not come off its seat, replace the choke opener.

5. If coolant temperature is above about 19°C (66°F), Tab A on the choke opener lever should be seated against the carburetor.

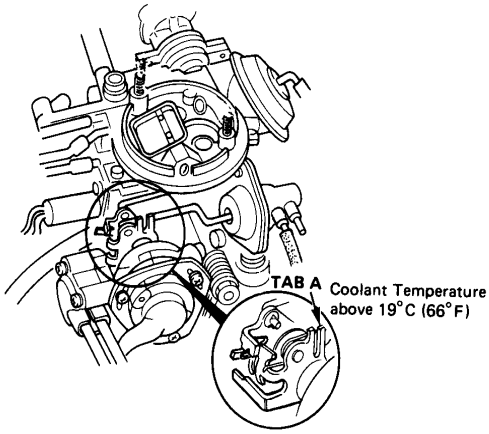

- If Tab A is seated, reconnect the choke heater wires, then go on to the Cranking Leak System test in the next column.
- If Tab A is not seated, check line #18 for leaks and check that thermovalve B is closed.

Cranking Leak System

1. Disconnect hose #28 from the lower fitting of the choke opener, attach a hand vacuum pump to the hose and draw vacuum.

   Vacuum should remain steady.

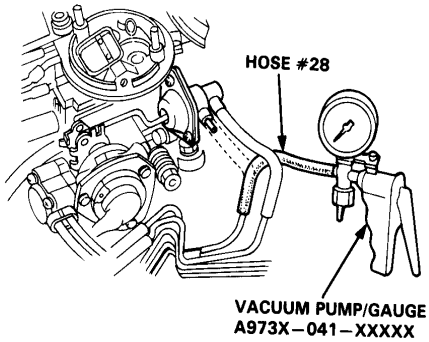

- If vacuum remains steady, go on to Step 2.
- If vacuum drops, check line #28 for leakage. If OK, replace the cranking leak solenoid valve and re-test.

2. Turn the ignition switch to III (START).

   Vacuum should be released.

- If vacuum is released, the test is complete.
- If vacuum is not released, check for voltage at the cranking leak solenoid valve (control box #1, with the ignition switch turned to III.

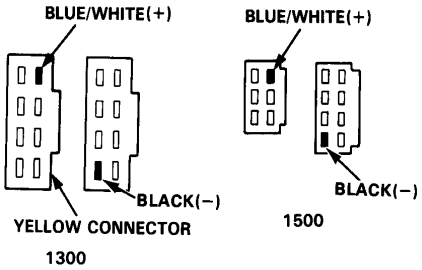

– If there is no voltage, check the wiring and fuse, and re-test.
– If there is voltage, check line #28 for blockage. If OK, replace the cranking leak solenoid valve and re-test.

Automatic Choke

Choke Coil Heater

COLD ENGINE

Start the engine and let it run. As the engine reaches normal operating temperature, the choke valve should fully open:

- If it does, go on to the fast idle unloader test in the next column.
- If it doesn't, inspect the linkage, and clean or repair it as necessary (page **11-11**).
- If the choke still does not open all the way, disconnect the white/blue choke cover wire from the engine compartment wire harness and check for voltage.

There should be battery voltage with the engine running.

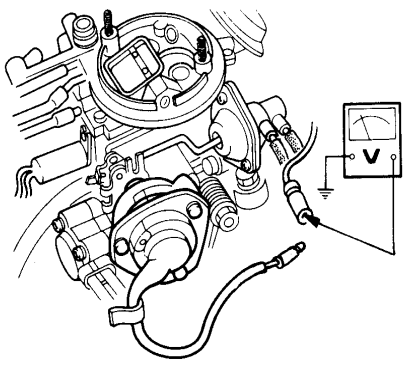

– If the voltmeter reads 0 volts, check for an open circuit in the white/blue wire between the choke cover connector and voltage regulator connector, then check the charge warning light circuit.

Fast Idle Unloader

HOT ENGINE

When the engine warms up, its speed should drop below 1400 rpm as the unloader pulls the internal choke linkage off the fast idle cam.

- If fast idle drops below 1400 rpm, go on to the Fast Idle check on page **11-16**.
- If fast idle does not drop below 1400 rpm, disconnect the two unloader hoses, and check that vacuum is present.

– If vacuum is present, check the unloader for leaks or blockage. Remove the choke cover, and check the unloader rod for free movement. Repair or replace parts as necessary, and retest.
– If there is no vacuum at the inner fitting, check for vacuum at the choke opener (see page, 11-12) and thermovalve B.
– If there is no vacuum at the outer fitting, check thermovalve A.
– Repair or replace as necessary.

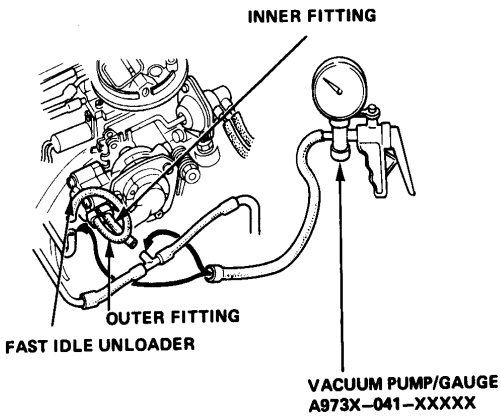

Linkage Adjustment

NOTE:
- This check is not necessary unless the linkage has been bent, choke opener has been replaced, or the car has poor cold starting.
- This check can be made with the engine HOT or COLD.

1. Remove the choke cover (page 11-16).

2. While holding the choke valve closed, open and close the throttle fully to engage the choke and fast idle linkage.

3. Disconnect the choke opener hose from the steel tubing manifold, and attach a check valve to it as shown. Then pressurize the choke opener with compressed air, 103-586 kPa (15-85 psi) is OK, to hold the bleed valve in it closed.

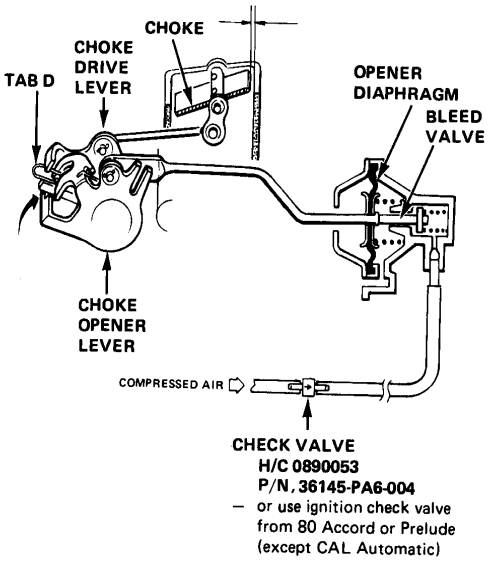

4. Push the choke opener lever towards the opener until it stops (the opener rod seats against the pressurized bleed valve), then pull the choke drive lever down against the opener lever (to take all free play out of the linkage), and measure the clearance between the choke valve and casting:

1st Stage Clearance:
1500 M/T: 1.27 ± 0.07 mm (0.050 ± 0.003 in)
1500 A/T: 1.10 ± 0.07 mm (0.043 ± 0.003 in)
1300 49ST: 0.86±0.07mm(0.34±0.003 in) and CAL
1300 HI ALT: 1.02 ± 0.07 mm (0.040 ± 0.003 in)

Adjust clearance by bending Tab D.

5. Remove the check valve, and reconnect the choke opener hose.

6. Hold both levers together, then push them toward the diaphragm again until they stop (Tab A on the opener lever seats against the carburetor), and measure the clearance at the choke valve.

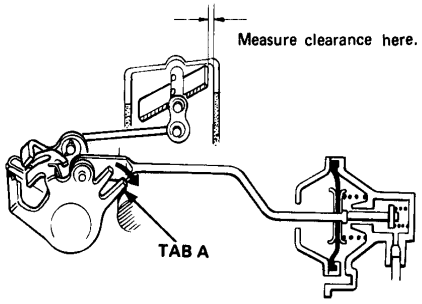

2nd Stage clearance:
1,500 M/T: 1.80±0.09mm (0.071±0.004 in)
1300 and 1500 A/T: 1.93±0.09 mm (0.076±0.0 04 in)

Adjust clearance by bending Tab A.

7. While still holding opener lever Tab A against its seat, release the choke drive lever, and measure the clearance at the choke valve (Tab C on the drive lever should stay seated against the spring loop; if not, repeat step 2 and re-check):

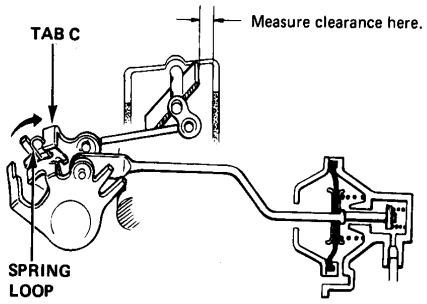

3rd Stage Clearance:
1500: 5.26 ± 0.20 mm (0.207 ± 0.008 in)
1300: 3.87 ± 0.20 mm (0.152 ± 0.008 in)

Automatic Choke

Fast Idle

HOT ENGINE

1. Stop the engine and connect a tachometer to it.
2. Disconnect and plug the inside vacuum hose of the fast idle unloader.
3. To engage the fast idle cam, open and close the throttle fully while holding the choke valve closed.
4. Re-start the engine.

   Fast idle should be 3000 ± 500 rpm.

   - If not OK, reset the fast idle speed by turning the screw shown.

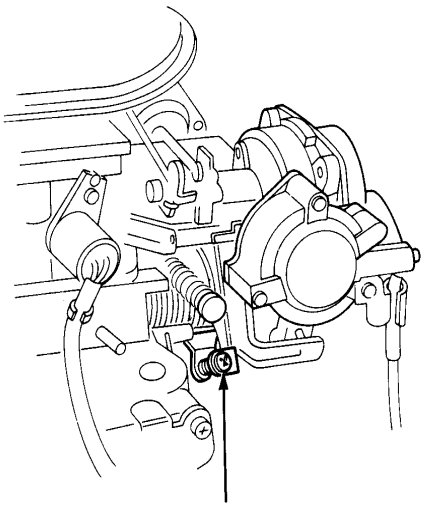

Choke Cover

Removal:
1. Remove the air cleaner.
2. Using a 5/32" or 4.1 mm diameter drill, drill out the rivets and remove the choke cover.

   CAUTION: Cover the carburetor with a clean shop rag to prevent chips from falling into the carburetor throat.

Installation:
1. Reinstall the cover and adjust it so that index marks align, then secure it with rivets.
2. Reinstall the air cleaner.

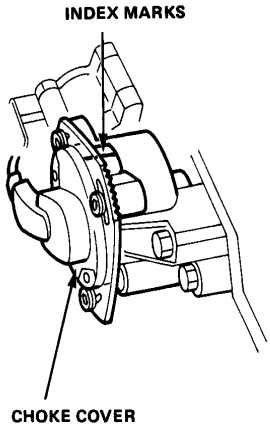

Vacuum Controlled Secondary

Testing

1. Disconnect the secondary diaphragm vacuum hose and attach a spare piece of hose between the diaphragm and a vacuum pump.

2. Open the throttle valve fully and apply a vacuum. Check that the diaphragm rod moves as vacuum is applied and that the vacuum then remains steady.

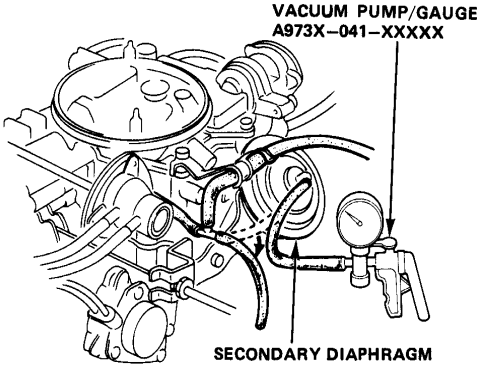

- If the vacuum does not hold or the rod does not move, first check the hose for proper connection and condition, then replace the diaphragm and re-check.

3. With the engine cold [water temperature below 50°C 122°F)] disconnect the vacuum hose from the 3-way joint, connect a vacuum pump and apply a vacuum.
Vacuum should not hold.

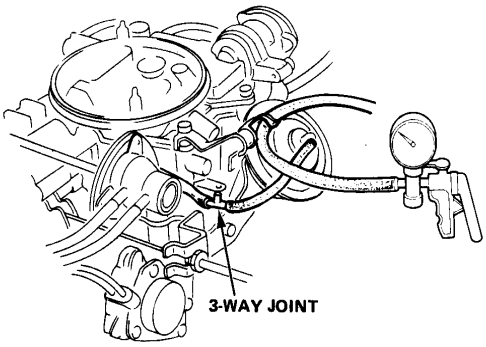

- If vacuum holds, first make sure the hose is not clogged, then replace thermovalve D.

4. After the engine has warmed up, disconnect the vacuum hose from the 3-way joint, connect a vacuum pump, and apply vacuum.
Vacuum should remain steady.

- If it does not remain steady, check the hose for proper connection and condition and replace thermovalve D.

5. Disconnect the vacuum hose from the 3-way joint and connect to a vacuum gauge. Apply a vacuum.
It should not hold vacuum.

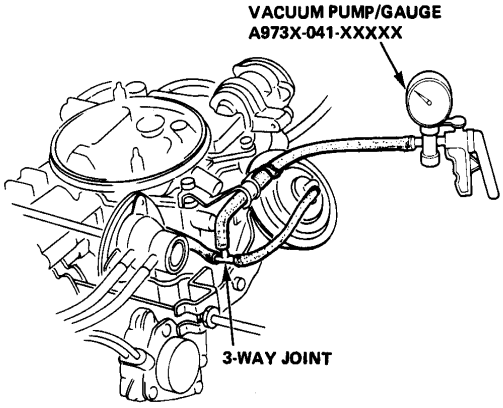

- If vacuum does not hold, test is complete.
- If vacuum is held, check the hose, the 3-way joint and clean the carburetor port.

Primary Slow Mixture Cut-off Solenoid Valve

Testing

The Fuel cut-off solenoid valve is energized when the engine speed is below 1,400 rpm and/or the control switch is OFF and/or vacuum switch A is OFF.

1. Place a clean shop towel around the solenoid valve, to soak up any gasoline, then loosen the screws and remove the solenoid valve.

WARNING
- **Wipe up any spilled gasoline before testing.**
- **If cut-off valve is removed for testing, be sure you ground it to prevent sparking or fire when the key is turned on.**

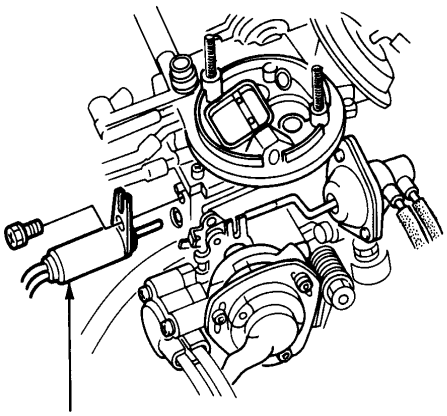

2. Ground the valve as far from the carburetor as possible and turn on the ignition while you watch the valve needle.
   - If the needle retracts, the valve is OK.
   - If the needle doesn't retract, check for voltage at the solenoid.
   - If voltage is present, replace the solenoid valve.
   - If voltage is not present, check the fuse and wiring.

Fuel Filters

Replacement

Replace both front and rear filters every 4 years or 60,000 miles (96,000 km), whichever comes first.

WARNING
- **Do not smoke while working on the fuel system. Keep open flame away from work area.**
- **Block front wheels before jacking up rear of car.**

Front

1. Use fuel line clamps to pinch off the fuel lines.
2. Disconnect the fuel lines and remove the fuel filter.
   CAUTION: When disconnecting the fuel lines, slide back the clamps then twist the lines as you pull, to avoid damaging them.
3. Remove the filter cover from the old filter and install it on the new filter.
4. Install the new fuel filter.
5. Remove the fuel line clamps.

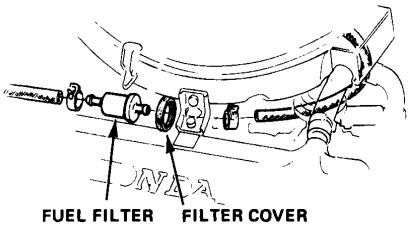

Rear

1. Raise the rear of the car and place jackstands in proper locations.
2. Push in the tab of the fuel filter to release the holder, then remove the filter from its bracket.
3. Attach fuel line clamps to the fuel lines and disconnect the lines from the filter.
   CAUTION: To avoid damaging the fuel lines when disconnecting, slide back the clamps then twist the lines as you pull.
4. Install in the reverse order of removal.

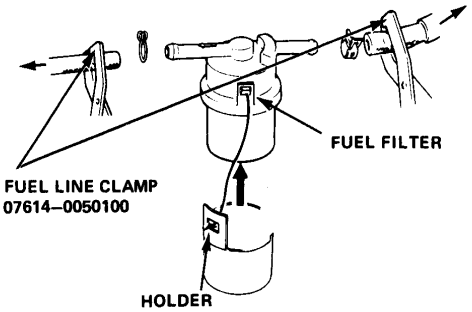

Two-way Valve

Replacement

WARNING Do not smoke while working on the fuel system. Keep open flame away from work area.

1. Block front wheels.
2. Jack up rear of the car and support with jackstands.
3. Place jack under fuel tank.

   CAUTION: Place a flat piece of wood on the jack lifting pad to prevent damage to the fuel tank.

4. Remove the tank mounting nuts.
5. Lower fuel tank only enough to gain access to two-way valve.
6. Remove screws holding two-way valve to fuel tank and remove valve.

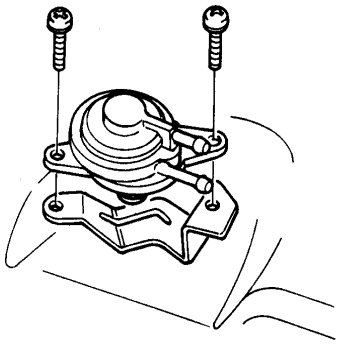

7. Install in reverse order of removal.

Fuel Gauge Sending Unit and Fuel Line Unit

Replacement

WARNING Do not smoke while working on the fuel system. Keep open flame away from work area. Drain fuel only into an approved container.

Fuel Gauge Sending Unit

1. Check that ignition switch is OFF, then disconnect the fuel sending unit connector at tank.
2. Drain and remove fuel tank as shown on page 11-20.
3. Remove fuel sending unit from tank.

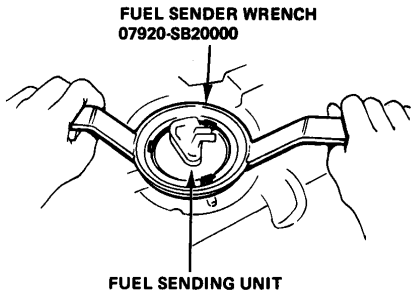

Fuel Line Unit

1. Drain and remove fuel tank as shown on page 11-20.
2. Remove fuel line unit from tank.

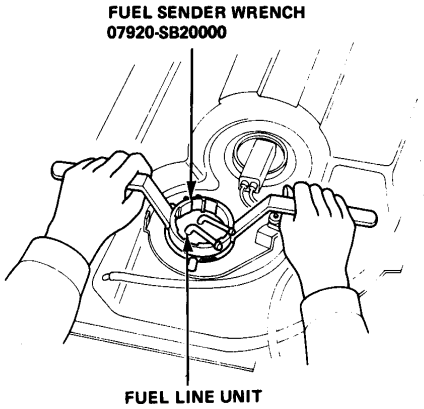

Fuel Tank

Replacement

2WD

WARNING **Do not smoke while working on fuel system. Keep open flame away from work area.**

1. Block front wheels.
2. Jack up the rear of the car and support with jackstands.
3. Remove the drain bolt and drain the fuel into an approved container.
4. Disconnect the fuel gauge sending unit connectors.
5. Disconnect the hoses.

   CAUTION: When disconnecting the hoses, slide back the clamps, then twist hoses as you pull, to avoid damaging them.

6. Place a jack, or other support, under the tank.
7. Remove the strap nuts and let the straps fall free.
8. Remove the fuel tank.
9. Install a new washer on the drain bolt, then install parts in the reverse order of removal.

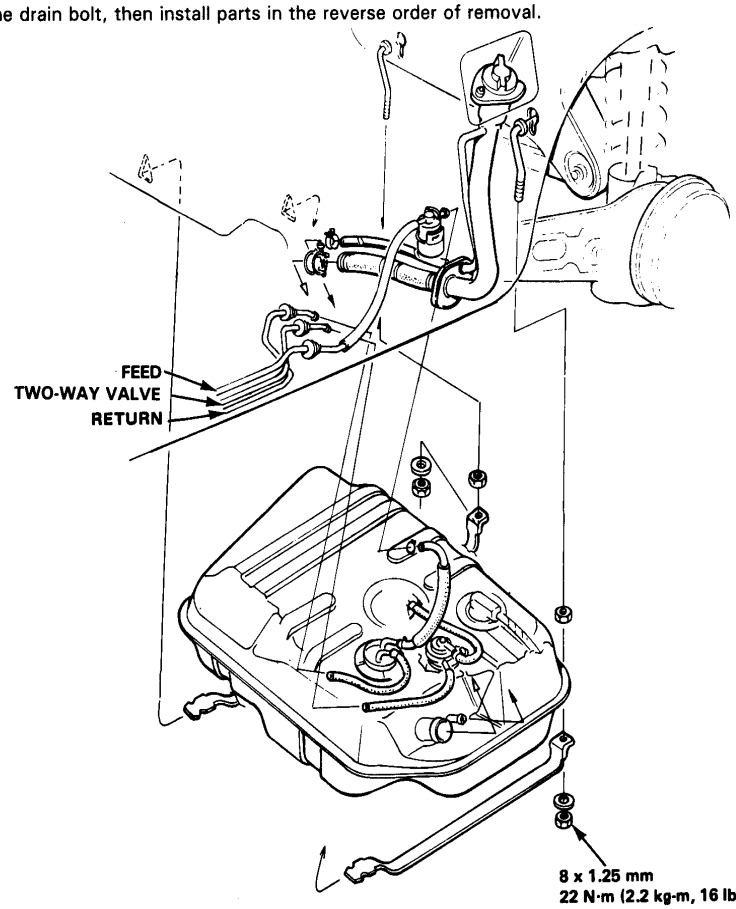

4WD Wagon

WARNING Do not smoke while working on fuel system. Keep open flame away from work area.

1. Block front wheels.
2. Jack up the rear of the car and support with jackstands.
3. Remove the fuel tank guard.
4. Remove the drain bolt and drain the fuel into an approved container.
5. Disconnect the fuel gauge sending unit connectors.
6. Disconnect the hoses.

   CAUTION: When disconnecting the hoses, slide back the clamps, then twist hoses as you pull, to avoid damaging them.

7. Place a jack, or other support, under the tank.
8. Remove the strap nuts and let the straps fall free.
9. Remove the fuel tank.

   NOTE: The tank may have to be pulled to free it from the undercoating.

10. Install a new washer on the drain bolt, then install parts in the reverse order of removal.

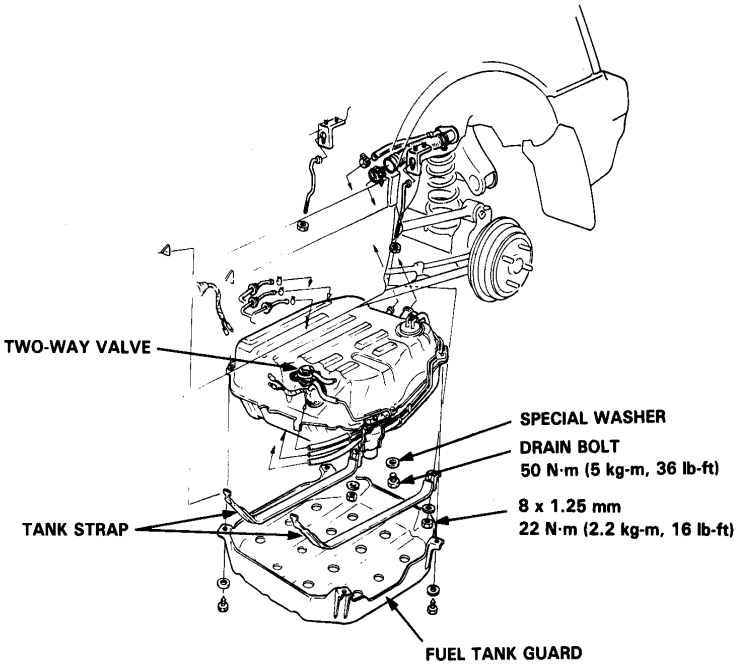

Fuel Pump

Output Test

WARNING Do not smoke during the test. Keep any open flame away from your work area.

NOTE: Check for a clogged fuel filter and/or fuel line before checking fuel pump pressure.

1. Disconnect the fuel line at the fuel filter in the engine compartment, and connect a pressure gauge to it as shown.

2. Disconnect the fuel return line at the fuel pump, and plug the return fitting with a cap.

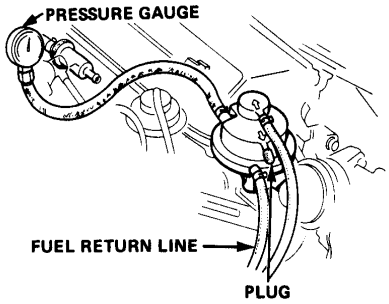

3. Start the engine and allow it to idle until pressure stabilizes, then stop engine.
   Pressure should be 17.7-26.5 kPa (2.7-3.8 psi) at idle.
   - If gauge shows at least 17.7 kPa (2.7 psi) go on to step 4.
   - If gauge shows less than 17.7 kPa (2.7 psi), replace pump and re-test.

4. Remove pressure gauge and hold a graduated container under the hose.

5. Start the engine, and allow it to idle for 60 seconds, then stop the engine. Fuel volume should be 170 cc (5.7 oz.) or more.
   - If fuel volume is less than specified, replace the fuel pump and re-test.

   NOTE: Check for a clogged fuel filter and/or fuel line before replacing pump.

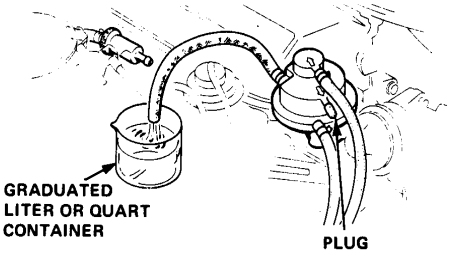

6. Remove plug from fuel pump return fitting and reconnect return line.

Replacement

WARNING Do not smoke while working on fuel system. Keep open flame away from work area.

1. Attach fuel line clamps to fuel pump lines.

2. Disconnect fuel lines at fuel pump.

   CAUTION: When disconnecting fuel lines, slide back clamps then twist lines as you pull, to avoid damaging them.

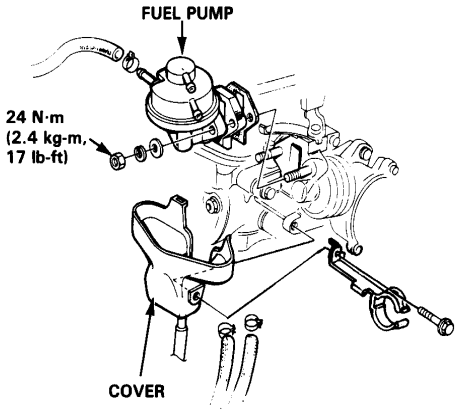

3. Remove fuel pump.

4. Install in the reverse order of removal.

   CAUTION: Make sure that the fuel lines are connected properly and securely.

Carburetor

Replacement of Attached Parts

WARNING Do not smoke during this procedure. Keep any open flame away from your work area. Drain fuel only into an approved container.

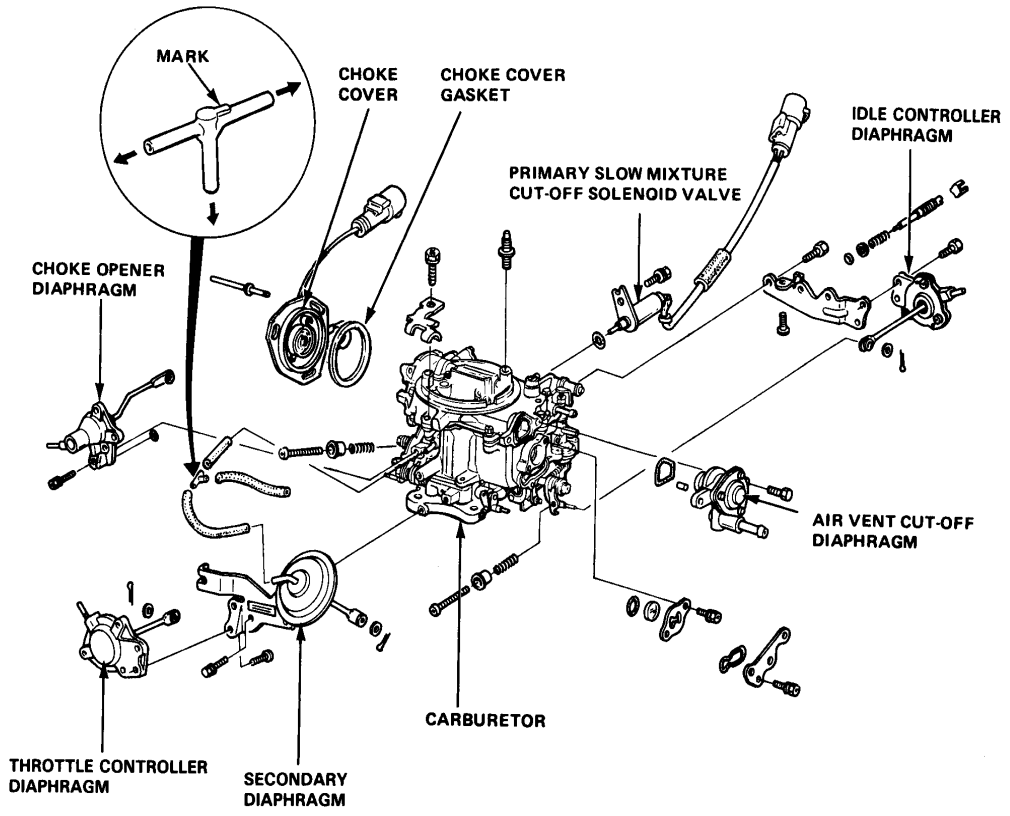

Carburetor

Idle Speed/Mixture Inspection

Propane Enrichment Method

WARNING Do not smoke during this procedure. Keep any open flame away from your work area.

NOTE: This procedure requires a propane enrichment kit.

1. Start engine and warm up to normal operating temperature; the cooling fan will come on.
2. Remove the #8 vacuum hose from the intake air control diaphragm and clamp the hose end.

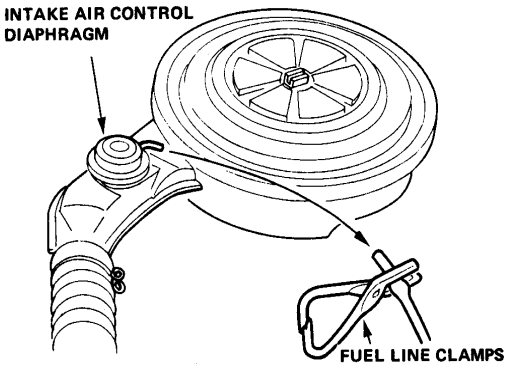

3. Connect tachometer.
4. Check idle speed with the headlights, heater blower, rear window defroster, cooling fan and air conditioner off.

   NOTE: The idle boost solenoid valve will be operated if the steering is turned on power steering model.
   Therefore, check the idle speed with the steering in a straight ahead position.

Idle speed should be:

		CAL	49 ST and HI ALT	
1300		650±50	650±50	750±50 ↕ 800±50
1500	Manual	700±50 *750±50	700±50 ↕ 750±50	
	Automatic	700±50	650±50 ↕ 700±50	

↕: The lower number is if idle is measured at high altitude; the higher number is if idle is measured at low altitude.

*: 4WD Wagon

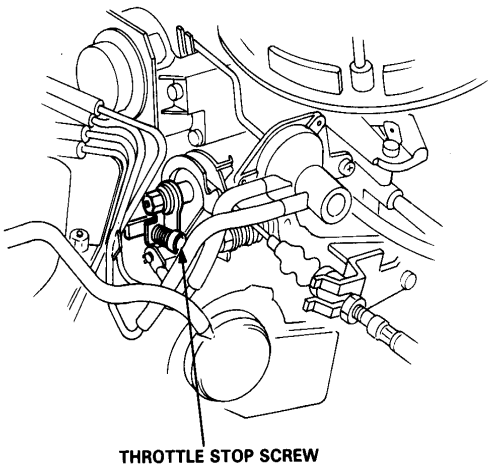

Adjust the idle speed, if necessary, by turning the throttle stop screw.

NOTE: If the idle speed is excessively high, check the dashpot system (page 12-60).

5. Disconnect air cleaner intake tube from air duct on radiator bulkhead.
6. Insert the hose of the propane enrichment kit into the intake tube about 4-inches.

   NOTE: Check that propane bottle has adequate gas before beginning test.

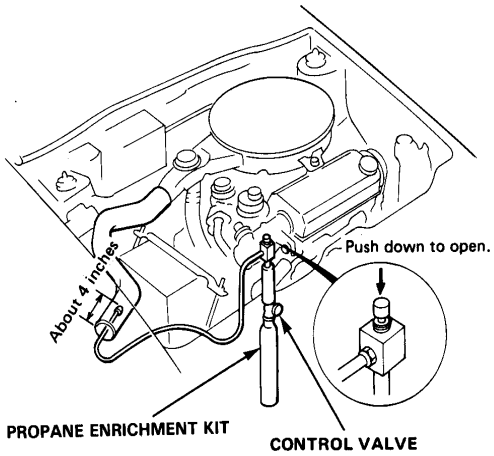

7. With engine idling, depress push button on top of propane device, then slowly open the propane control valve to obtain maximum engine speed. Engine speed should increase as percentage of propane injected goes up.

   NOTE: Open the propane control valve slowly; a sudden burst of propane may stall the engine.

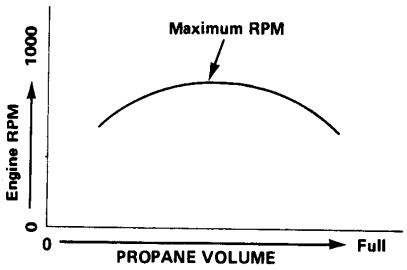

Propane Enriched Maximum RPM

Transmission	RPM Increase	
	1300	1500
Manual	125±25	100±25
Automatic	—	50±20

- If engine speed does not increase per specification, mixture is improperly adjusted. Go to step 8.
- If engine speed increases per specification, go to step 21.

8. Remove the air cleaner and close the propane control valve.

9. Disconnect the vacuum hose to the fast idle unloader.

10. Pull the throttle cable out of the its bracket.

11. Remove the carburetor nuts and the bolt securing the steel tubing vacuum manifold.

12. Lift the carburetor clear of its studs, then tilt it backwards so you can remove the idle controller bracket screws.

13. Remove the idle controller bracket.

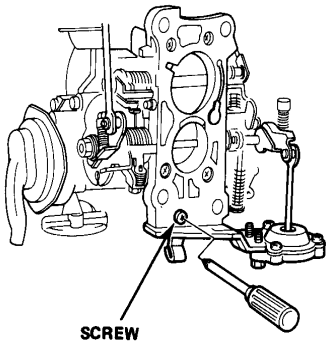

14. Remove the mixture adjusting screw hole cap, then reinstall the idle controller bracket.

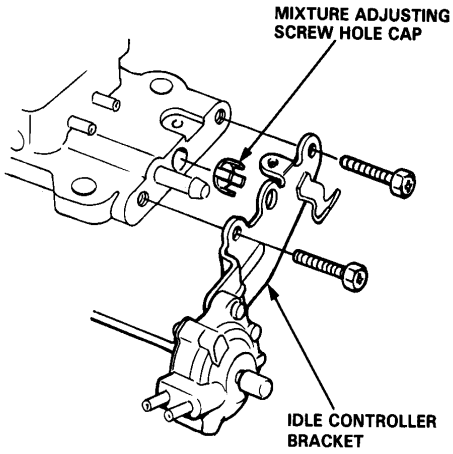

(cont'd)

Carburetor

Idle Speed/Mixture Inspection (cont'd)

15. Reinstall the carburetor.

16. Reconnect the vacuum hose to the fast idle unloader.

17. Reinstall the air cleaner.

18. Start engine and warm up to normal operating temperature; the cooling fan will come on.

19. Remove the #8 vacuum hose from intake air control diaphragm and clamp the hose end.

20. Reinstall the propane enrichment kit and recheck maximum propane enriched rpm.

    - If the propane enriched speed is too low, mixture is too rich: turn the mixture screw 1/4-turn clockwise and recheck.
    - If the propane enriched speed is too high, mixture is too lean: turn the mixture screw 1/4-turn counterclockwise and recheck.

21. Close the propane control valve and recheck idle speed.

    NOTE: Run the engine at 2,500 rpm for 10 seconds to stabilize condition.

    - If idle speed is as specified (step 4), go to step 23.
    - If idle speed is not as specified (step 4), go to step 22.

22. Recheck idle speed and, if necessary, adjust by turning throttle stop screw, then repeat steps 20 and 21.

23. Remove propane enrichment kit and reconnect air cleaner intake tube on the radiator bulk head.

24. Reinstall the mixture adjusting screw hole cap.

25. Check the idle controller boosted speed.

    NOTE: There is no idle controller on automatic transmission cars without air conditioner and power steering.

    - On 1300 and 1500 manual transmission cars, check the idle speed with the headlights on and the heater blower set to III.
    - On 1500 automatic transmission car with power steering, check the idle speed while turning the steering wheel.

Idle RPM should be:

		CAL	49 ST and HI ALT	
1300		650±50	650±50	750±50 ↕ 800±50
1500	Manual	700±50 *750±50	700±50 ↕ 750±50	
	**Automatic	700±50	650±50 ↕ 700±50	

↕: The lower number is if idle is measured at high altitude; the higher number is if idle is measured at low altitude.

*: 4 WD Wagon

**: equipped with power steering

Adjust the idle speed, if necessary, by turning the idle control screw.

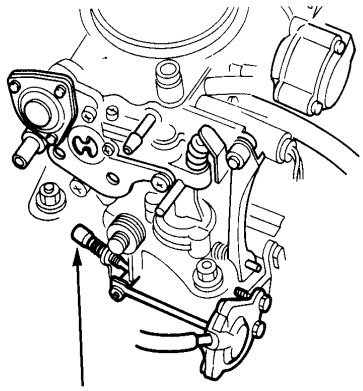

IDLE CONTROL SCREW

- If the idle rpm does not reach the specified idle speeds:
  - ON cars with power steering: go to step 26.
  - On cars with manual transmission: go to inle boost solenoid valve testing (page 11-27).

26. On cars with power steering:
If the idle speed is not as specified disconnect the power steering pressure switch connector and short the terminals with a jumper wire to actuate the idle controller.

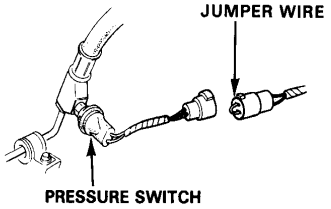

Then set the idle speed to the following rpm by turning the idle control screw:

CAL: 770±50 rpm
49ST and HI ALT: 720±50 rpm (at high altitude)
770±50 rpm (at low altitude)

- If the idle rpm does not reach the specified ille speed, go to idle boost solenoid valve testing.

27. If equipped with air conditioning, make a second check with the A/C on.

Idle speed should be:

		CAL	49 ST and HI ALT	
1300		700±50	700±50	750±50 ↕ 800±50
1500	Manual	750±50	750±50	
	Auto-matic	750±50	750±50	

↕: The lower number is if idle is measured at high altitude; the higher number is if idle is measured at low altitude.

Adjust the speed, if necessary, by turning the adjusting screw on the idle boost diaphragm.

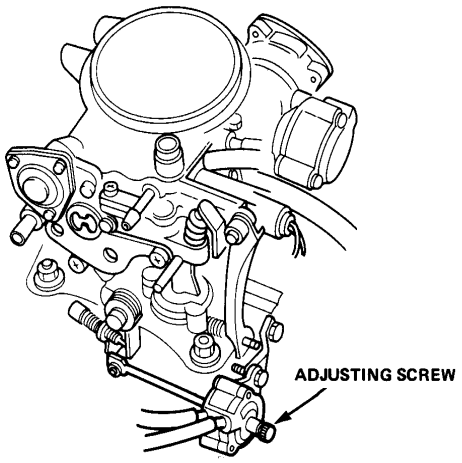

Testing
The idle boost solenoid valve is energized whenever the coolant temperature is below 75°C(167°F), or above 75° C (167°F) with the following conditions:
A/T—when the power steering is turned.
M/T—

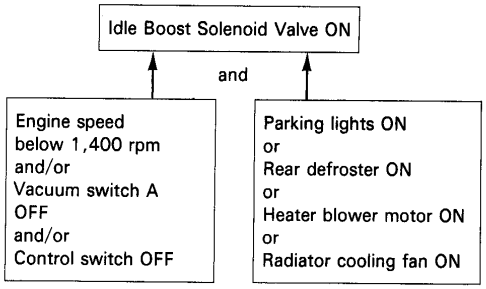

If the idle controller does not operate with the headlights on and the heater blower set to III, or while turning the steering wheel, disconnect hose #21 from the idle controller and check for vacuum.

- If there is vacuum, replace the idle controller.
- If there is no vacuum, check for voltage at the idle boost solenoid valve (emission control box #1).

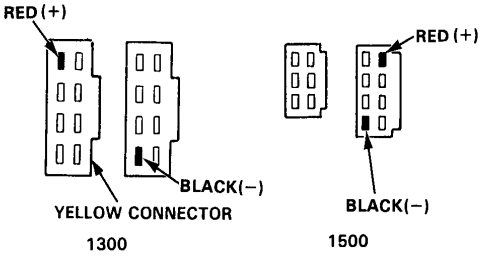

— If there is no voltage, check the wiring and control unit A.
— If there is voltage, check vacuum lines #12 and #21 for blockage, leaks or disconnected hose and repair or replace as necessary.

If there is no problem, replace the idle boost solenoid valve.

Carburetor

Tailpipe Emission Inspection

WARNING Do not smoke during this procedure. Keep any open flame away from your work area.

1. Follow steps 1, 3, 4, and 5 of the propane enrichment method.
2. Warm up and calibrate the CO meter according to the meter manufacturer's instructions.
3. Check idle CO with the headlights, heater blower, rear window defroster, cooling fan, and air conditioner off.

   CO meter should indicate 0.1% maximum.

Float Level Adjustment

WARNING Do not smoke while working on fuel system. Keep open flame away from work area.

1. Place the car on level ground.
2. Start and warm up the engine, snap the throttle between idle and 3,000 rpm several times then allow it to idle.
3. When the fuel level stabilizes, check that it is centered in the inspection window.

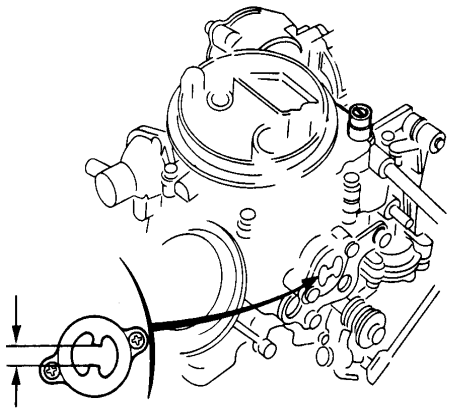

4. If the fuel level is not centered, adjust it by turning the adjusting screw.

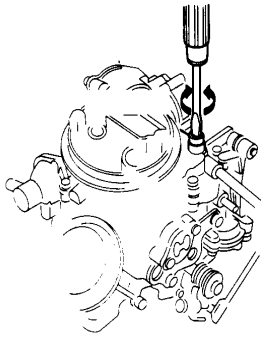

NOTE: Do not turn the adjusting screws more than 1/8-turn every 15-seconds.

5. Paint the adjustment screws with white paint after adjustment.

Power Valve

Inspection (1300)

1. Disconnect the hose from the power valve and connect a hand vacuum pump to the valve. Draw vacuum and listen for a clicking noise from the power valve.

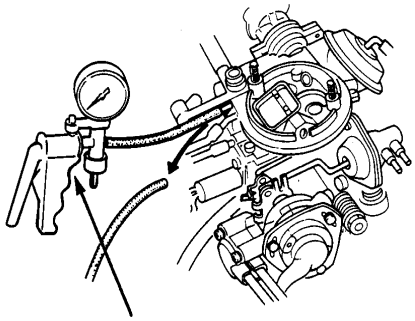

VACUUM PUMP/GAUGE
A973X—041—XXXXX

- If a clicking noise is heard, go on to step 2.
- If no noise is heard, replace the carburetor and re-test.

2. Start the engine and wait for it to warm up.

   Disconnect the hose from the power valve and connect a vacuum gauge to the hose.

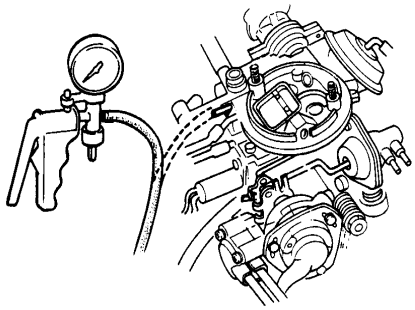

   Vacuum should not be available.

   - If vacuum is not available, go on to step 3.
   - If vacuum is available, check for voltage at the power valve control solenoid valve (#1 control box).

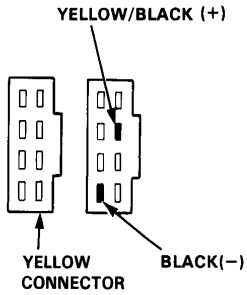

   — If there is voltage, replace the power valve control solenoid valve and re-test.
   — If there is no voltage, check the fuse, wiring, and speed sensor, then re-test.

3. Jack up the front of the car, support with safety stands, block rear wheel, and set the hand brake.

4. Put the car in 2nd gear and check for vacuum at the power valve above 10 mph.

   There should be vacuum.

   - If there is vacuum, go on to step 5.
   - If no vacuum, remove the control box cover and check for voltage at the power valve control solenoid valve.

   — If there is voltage, replace vacuum switch B and re-test.
   — If there is no voltage, replace the power valve control solenoid valve and re-test.

(cont'd)

Carburetor

Power Valve (cont'd)

5. With the car still in gear, and speed above 10 mph, disconnect the vacuum hose #12 routed to control box #1, from the vacuum pipe manifold to simulate engine load.
   Vacuum to the power valve should disappear.

   - If vacuum disappears, the system is OK. Reconnect the vacuum hoses, the test is complete.
   - If vacuum doesn't disappear, check for voltage at vacuum switch B with the car above 10 mph.

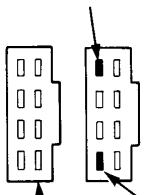

   — If there is voltage, go on to step 6.
   — If there is no voltage, check the fuse, wiring and speed sensor and re-test.

6. Remove the control box cover and check for continuity between vacuum switch B's wire terminals with hose #12 disconnected.

   - If there is continuity, replace the power valve control solenoid valve and re-test.
   - If no continuity, replace vacuum switch B and re-test.

Inspection (1500)

COLD ENGINE

NOTE: Engine coolant temperature must be below 65°C (149°F)

1 Disconnect the hose from the power valve and connect a hand vacuum pump to the valve. Draw vacuum and listen for a clicking noise from the power valve.

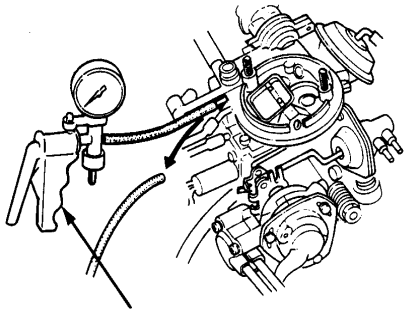

   - If a clicking noise is heard, go on to step 2.
   - If no noise is heard, replace the carburetor and re-test.

2. Start the engine. Disconnect the hose from the power valve and connect a vacuum gauge to the hose.

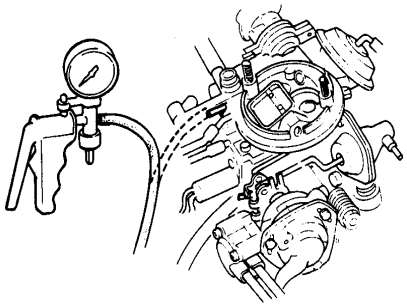

Vacuum should not be available.

- If vacuum is not available, test is complete.
- If vacuum is available, check for voltage at the power valve control solenoid valve in the emission box.

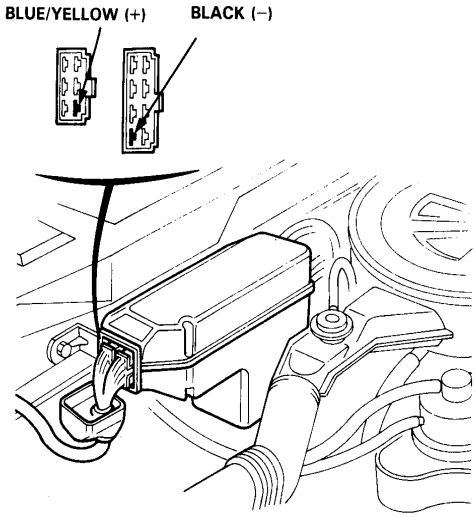

– If there is voltage, replace the power valve control solenoid valve and re-test.
– If there is no voltage, check the control unit. (See page 12-66).

Intake Air Temperature Sensor

Disconnect the intake air temperature sensor connector, and check for continuity across its terminals:

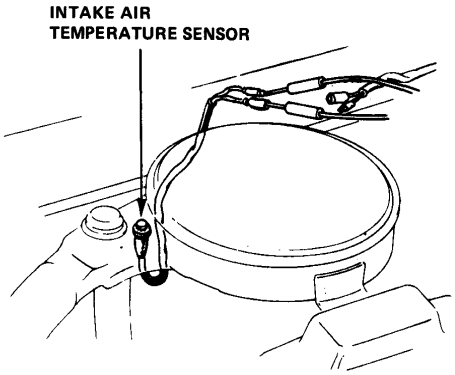

The sensor should have:

- Continuity, if the air temperature is below 4.5°C (40°F).
- No continuity if the air temperature is above 23°C (73°F).

Replace the sensor if continuity is not as specified.

Carburetor

Adjustment to Reduce Emissions at High Altitude

According to EPA regulations you may make the following adjustments to a low altitude car that will be normally driven at high altitude (above 4,000 feet).

NOTE: This procedure is only necessary for Civic 1300's originally sold at low altitude, outside of California. California cars should not be adjusted, 1500 Civic's (and any 1300 originally sold at high altitude) need not be adjusted for use at any altitude.

WARNING Do not smoke during this procedure. Keep any open flame away from your work area.

1. Remove the air cleaner.
2. Disconnect all vacuum hoses from the carburetor.
3. Pull the throttle cable out of its bracket.
4. Remove the carburetor nuts and the bolt securing the steel tubing vacuum manifold.
5. Lift the carburetor clear of its studs, then tilt it backwards so you can remove the idle controller bracket screws.

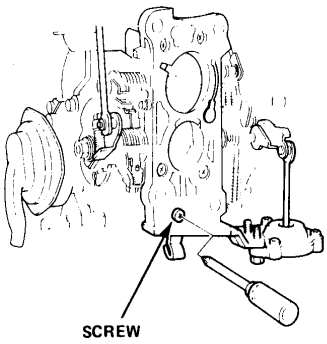

6. Remove the idle controller bracket and the mixture screw cap from the carburetor, then turn the mixture screw 1/2-turn clockwise.

   NOTE: The end result should be no less than 1 full turn from the seated position.

7. Reinstall the idle controller bracket (2 bolts, and the screw underneath the carburetor).
8. Place the mixture screw plug back into the carburetor, then reinstall the carburetor.
9. Push the throttle cable into its bracket.
10. Reconnect vacuum hoses to the carburetor.
11. Install the air cleaner.
12. Start the engine and let it warm up to normal temperature (radiator fan comes on).
13. Check the idle speed with the headlights, heater blower, radiator fan, and air conditioner off.

    The idle speed should be: 650±50 rpm

14. Check the idle controller boosted speed.

    — Check the idle speed with the headlights ON and the heater blower set to III.

    The idle speed should be: 650±50 rpm

15. Turn the A/C on, and check the idle speed again.

    The idle speed should be: 700±50 rpm

16. Apply an update label to the hood as shown.

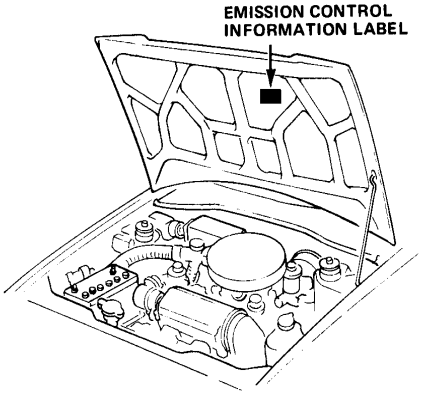

Fuel-Injected Engine

Index

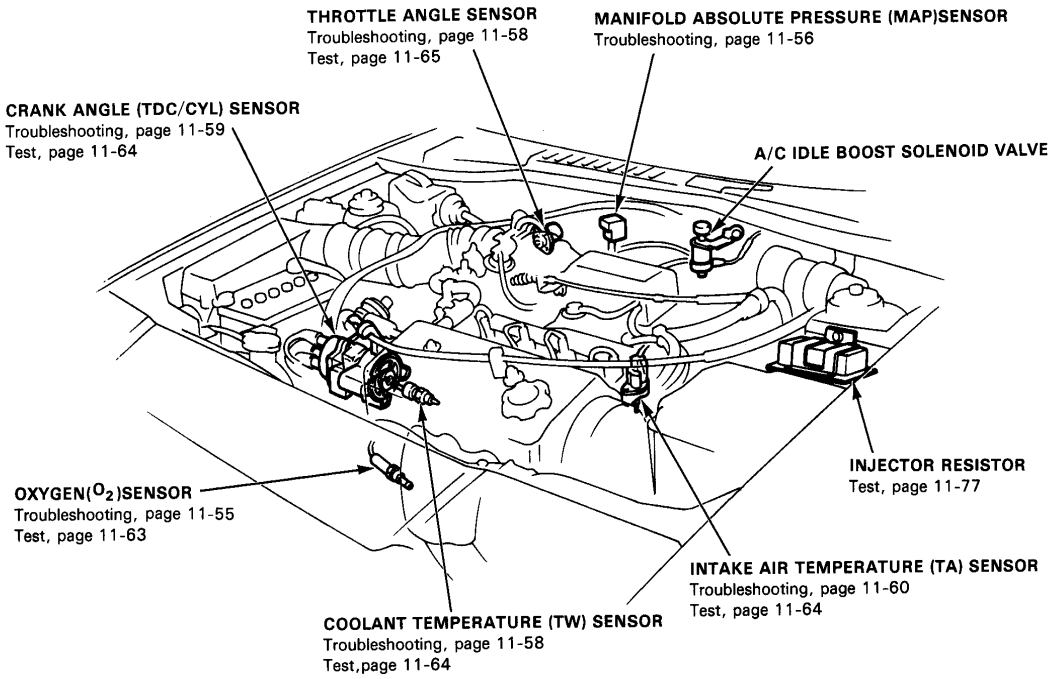
THROTTLE ANGLE SENSOR
Troubleshooting, page 11-58
Test, page 11-65
MANIFOLD ABSOLUTE PRESSURE (MAP)SENSOR
Troubleshooting, page 11-56
CRANK ANGLE (TDC/CYL) SENSOR
Troubleshooting, page 11-59
Test, page 11-64
A/C IDLE BOOST SOLENOID VALVE
INJECTOR RESISTOR
Test, page 11-77
OXYGEN(O_2)SENSOR
Troubleshooting, page 11-55
Test, page 11-63
INTAKE AIR TEMPERATURE (TA) SENSOR
Troubleshooting, page 11-60
Test, page 11-64
COOLANT TEMPERATURE (TW) SENSOR
Troubleshooting, page 11-58
Test,page 11-64

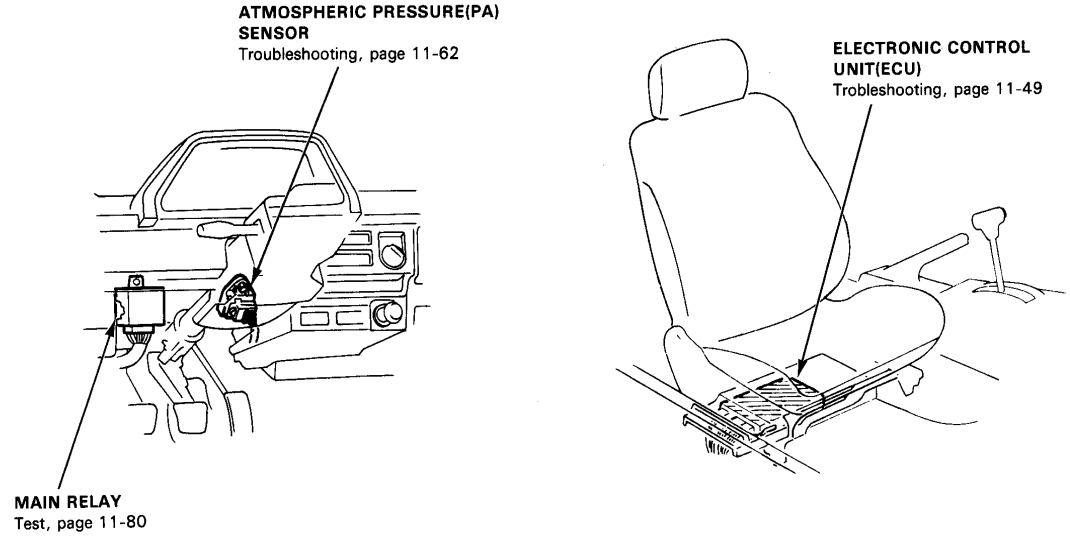
ATMOSPHERIC PRESSURE(PA) SENSOR
Troubleshooting, page 11-62
ELECTRONIC CONTROL UNIT(ECU)
Trobleshooting, page 11-49
MAIN RELAY
Test, page 11-80

11-34

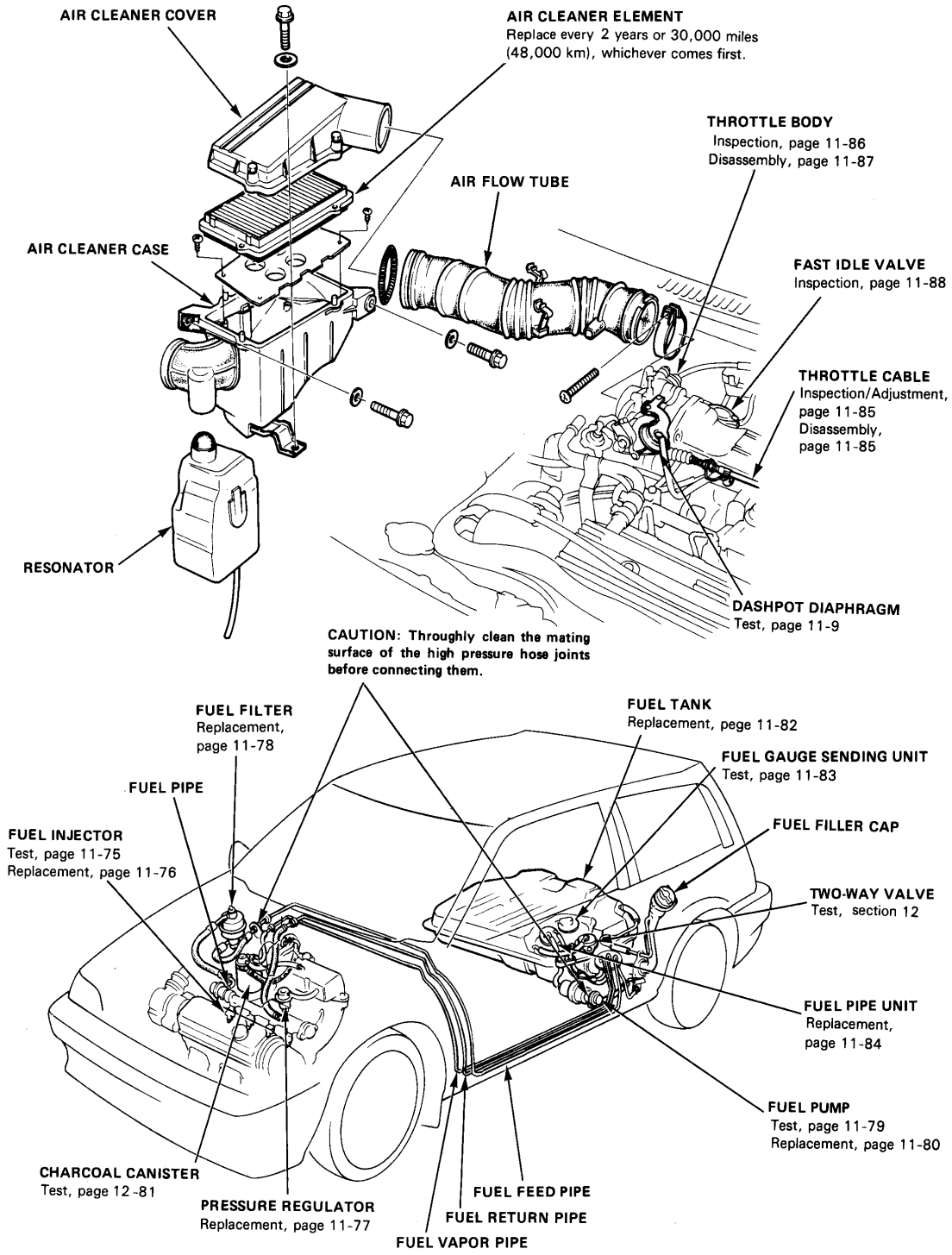
AIR CLEANER COVER
AIR CLEANER ELEMENT
Replace every 2 years or 30,000 miles (48,000 km), whichever comes first.
THROTTLE BODY
Inspection, page 11-86
Disassembly, page 11-87
AIR FLOW TUBE
AIR CLEANER CASE
FAST IDLE VALVE
Inspection, page 11-88
THROTTLE CABLE
Inspection/Adjustment, page 11-85
Disassembly, page 11-85
RESONATOR
DASHPOT DIAPHRAGM
Test, page 11-9
CAUTION: Throughly clean the mating surface of the high pressure hose joints before connecting them.
FUEL FILTER
Replacement, page 11-78
FUEL TANK
Replacement, pege 11-82
FUEL GAUGE SENDING UNIT
Test, page 11-83
FUEL PIPE
FUEL FILLER CAP
FUEL INJECTOR
Test, page 11-75
Replacement, page 11-76
TWO-WAY VALVE
Test, section 12
FUEL PIPE UNIT
Replacement, page 11-84
FUEL PUMP
Test, page 11-79
Replacement, page 11-80
CHARCOAL CANISTER
Test, page 12-81
PRESSURE REGULATOR
Replacement, page 11-77
FUEL FEED PIPE
FUEL RETURN PIPE
FUEL VAPOR PIPE

Interconnect Diagram

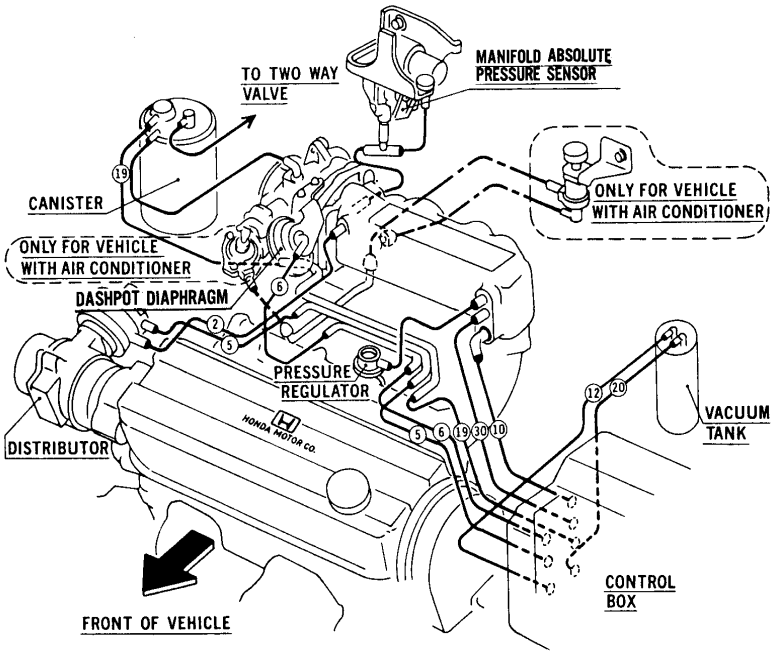

Control Box

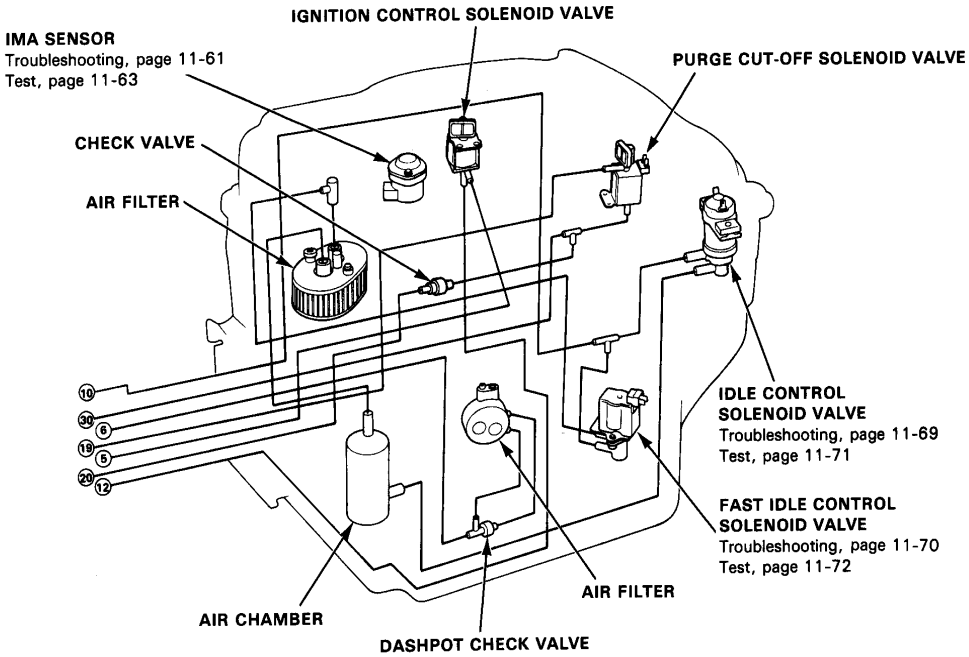

11-36

Vacuum and Electrical Connections

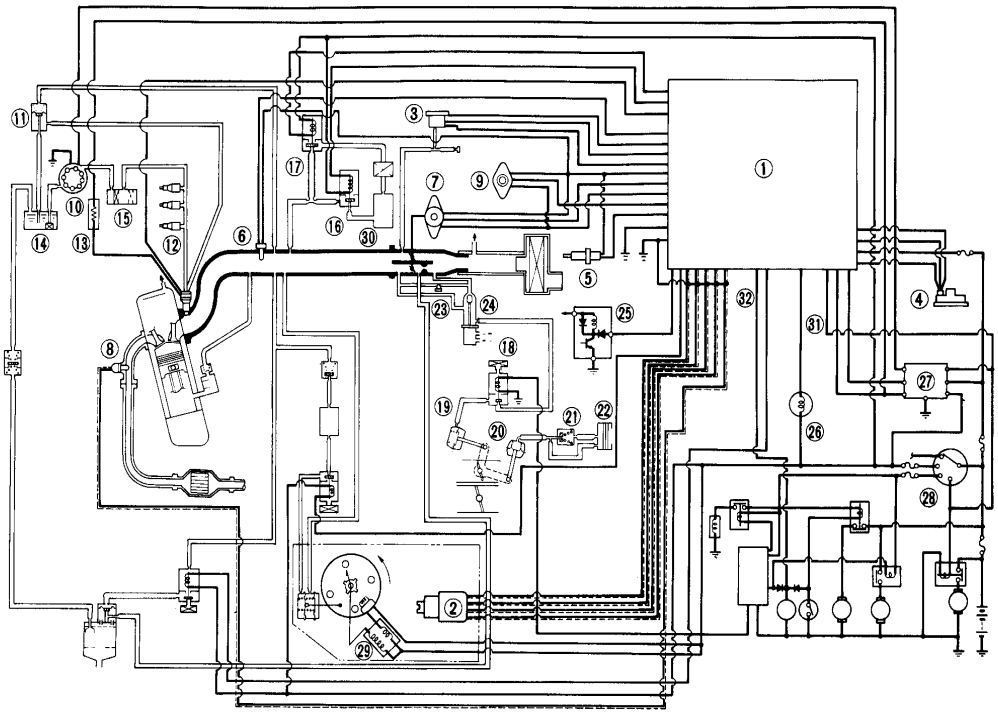

① ECU (Electronic Control Unit)
② CRANK ANGLE (TDC/CYL)SENSOR
③ MAP (Manifold Absolute Pressare) SENSOR
④ PA (Atmospheric Pressure) SENSOR
⑤ TW (Coolant Temperature) SENSOR
⑥ TA (Intake Air Temperature) SENSOR
⑦ THROTTLE ANGLE SENSOR
⑧ O_2 (Oxygen) SENSOR
⑨ IMA SENSOR
⑩ FUEL PUMP
⑪ PRESSURE REGULATOR
⑫ FUEL INJECTOR
⑬ INJECTOR RESISTOR
⑭ FUEL TANK
⑮ FUEL FILTER
⑯ IDLE CONTROL SOLENOID VALVE
⑰ FAST IDLE CONTROL SOLENOID VALVE
⑱ A/C IDLE BOOST SOLENOID VALVE
⑲ A/C IDLE BOOST DIAPHRAGM
⑳ DASHPOT
㉑ DASHPOT CHECK VALVE
㉒ AIR FILTER
㉓ IDLE ADJUSTING SCREW
㉔ FAST IDLE VALVE
㉕ ALTERNATOR
㉖ PGM-FI WARNING LIGHT
㉗ MAIN RELAY
㉘ IGNITION SWITCH
㉙ IGNITION COIL
㉚ AIR CHAMBER
㉛ STARTER SWITCH SIGNAL
㉜ A/C SWITCH SIGNAL

Description

PGM-FI Control System

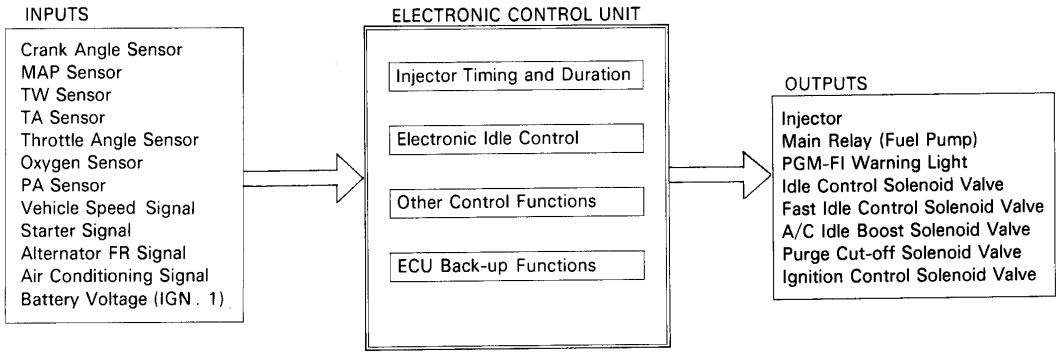

Injector Timing and Duration
The ECU contains memories for the basic discharge durations at various engine speeds and manifold pressures. The basic discharge duration, after being read out from the memory,is further modified by signals sent from various sensors to obtain the final discharge duration.

Electronic Idle Control
Idle Control/Fast Idle Control/A/C Idle Boost Solenoid Valves.
When the engine is cold, the A/C compressor is on or the alternator is charging, the ECU controls these solenoid valves to maintain the correct idle speed.

Other Control Functions

1. Starting Control
   When the engine is started, the ECU provides a rich mixture.
2. Fuel Pump Control
   - When the ignition switch is initially turned on, the ECU supplies ground to the main relay which supplies current to the fuel pump for 2 seconds to pressurize the fuel system.
   - When the engine is running the ECU supplies ground to the main relay which supplies current to the fuel pump.
   - When the engine is not running and the ignition is on, the ECU cuts ground to the main relay which cuts current to the fuel pump.
3. Fuel Cut-off Control
   - During deceleration with the throttle valve closed, current to the injectors is cut-off at speeds over 900 rpm,to improve fuel economy.
   - Fuel cut-off action also takes place when engine speed exceeds 7,000 rpm regardless of the position of the throttle valve to protect engine from over running.
4. Ignition Control Solenoid Valve (ICSV)
   When the coolant temperature is above 60°C(140°F) and the manifold vacuum is low, the ECU cuts ground to the ICSV which cuts vacuum to advance diaphragm B to prevent detonation.
5. Purge Cut-off Solenid Valve
   When the coolant temperature is below 65°C(149°F), the ECU supplies ground to the purge cut-off solenoid valve which cuts vacuum to the purge control valve.

ECU Back-up Functions

1. Fail-Safe Function
   When an abnormality occurs in a signal from a sensor, the ECU ignores that signal and assumes a pre-programmed value that allows the engine to continue to run.

2. Back-up Function
   When an abnormality occurs in the ECU itself, the injections are controlled by a back-up circuit independent of the main system in order to permit minimal driving.

3. Self-diagnosis Function (PGM-FI warning light and LED indicators).
   When an abnormality occurs in a signal from a sensor, the ECU lights the PGM-FI warning light, stores the failure code in ermasable memory and indicates the code with four LED indicators on the ECU anytime the ignition is on.When the ignition is initially turned on, ECU supplies ground for the PGM-FI warning light for about 2 seconds.

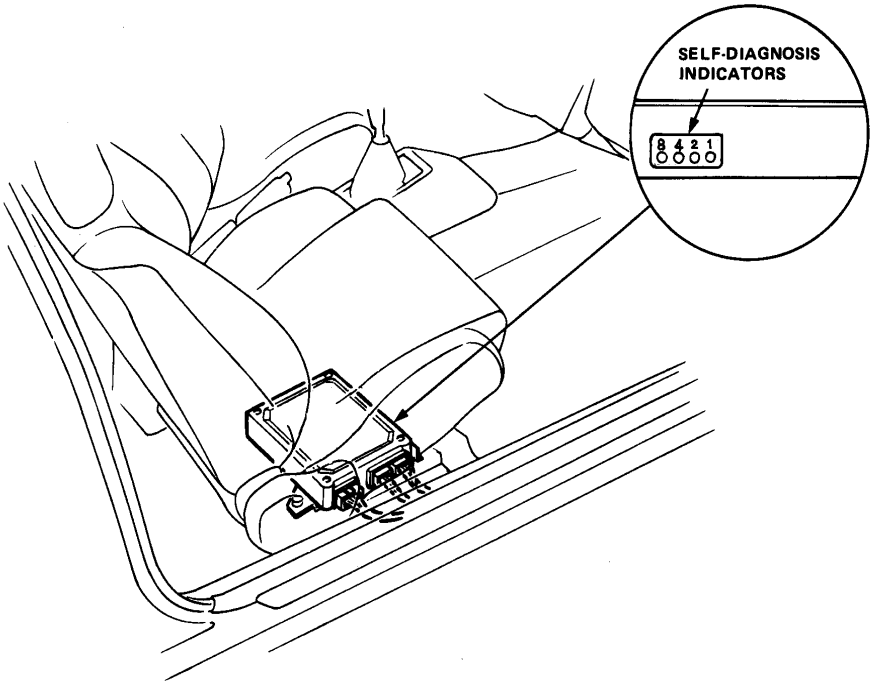

Description

PGM-FI Control System

Crank Angle (TDC/CYL) Sensor

The sensors is part of the distributor coil assembly. It consists of a pair of rotors, TDC and CYL, and a pickup for each rotor. Since the rotors are coupled to the camshaft, they turn together as a unit as the camshaft rotates. The CYL sensor detects the position of the No. 1 cylinder as the base for the Sequential Injection whereas the TDC sensor serves to determine the injection timing for each cylinder. The TDC sensor is also used to detect engine speed to read out the basic discharge duration for different operating conditions.

CAUTION: Pick-up coil adjustment is factory-set and cannot be adjusted. If the coils are faulty, replace the crank angle sensor assembly.

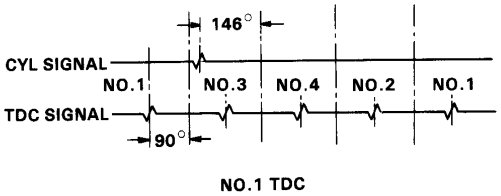

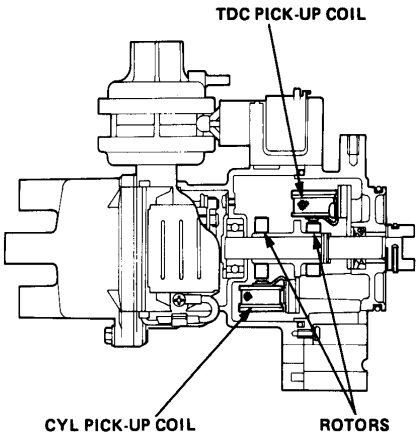

Manifold Absolute Pressure (MAP) Sensor

The sensor converts manifold absolute pressure readings into electrical voltage signals and sends them to the ECU.This information together with signals from the crank angle sensor is then used to read out the basic discharge duration from the memory.

Atmospheric Pressure (PA) Sensor

Like the MAP sensor, the unit converts atmospheric pressures into voltage signals and sends them to the ECU. The signals then modify the basic discharge duration to compensate for changes in the atmospheric pressure.

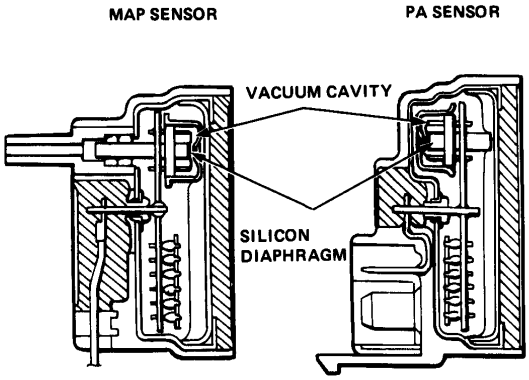

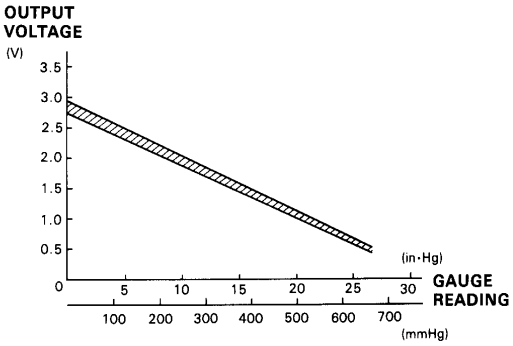

Coolant Temperature (TW) Sensor

The sensor uses a temperature-dependent resistor (thermistor) to measure differences in the coolant temperature. The basic discharge duration is read out by the signals sent from this sensor through the ECU. The resistance of the thermistor decreases with a rise in coolant temperature, as shown in the table below.

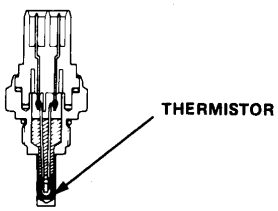

Coolant temperature	°C (°F)	−20 (−4)	40 (104)	80 (176)
Resistance	kΩ	14.3–21.5	0.98–1.34	0.22–0.35

Intake Air Temperature (TA) Sensor

This device is also a thermistor and is placed in the istake manifold. It acts much like the TW sensor but with a reduced thermal capacity for quicker response. The basic discharge duration read out from the memory is again compensated for different operating conditions by the signals sent from this sensor through the ECU.

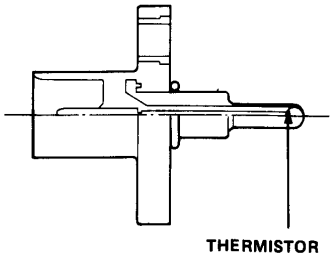

Air temperature	°C (°F)	−20 (−4)	40 (104)	80 (176)
Resistance	kΩ	14.3–21.5	0.98–1.34	0.22–0.35

Throttle Angle Sensor

This sensor is essentially a variable resistor. In construction, the rotor shaft is connected to the throttle valve shaft such that, as the throttle valve is moved, the resistance varies, altering the output voltage to the ECU.

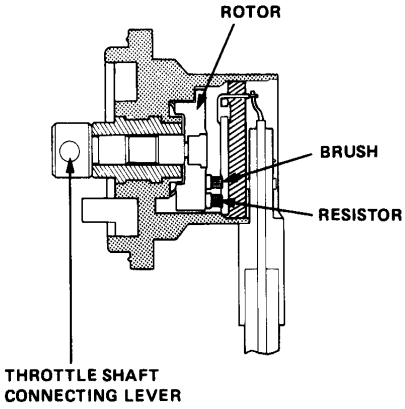

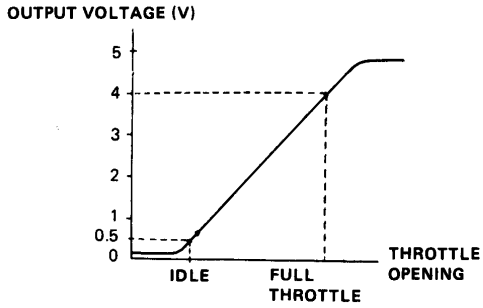

(cont'd)

Description

PGM-FI Control system (cont'd)

Oxygen (O_2) Sensor

The oxygen sensor detects the oxygen content in the exhaust gas, and inputs the ECU. In operation, the ECU receives the signals from the sensor and changes the duration during which fuel is injected. The oxygen sensor is located in the exhaust manifold.

The sensor is a hollow shaft of zirconia with a closed end. The inner and outer surfaces are plated with platinum, thus forming a platinum electrode. The inner surface or chamber is open to the atmosphere whereas the outer surface is exposed to the exhaust gas flow through the manifold.

Voltage is induced at the platinum electrode when there is any difference in oxygen concentration between the two layers of air over the surfaces. Operation of the device is dependent upon the fact that the induced voltage changes sharply as the stoichiometric air-fuel ratio is exceeded when the electrode is heated above a certain temperature.

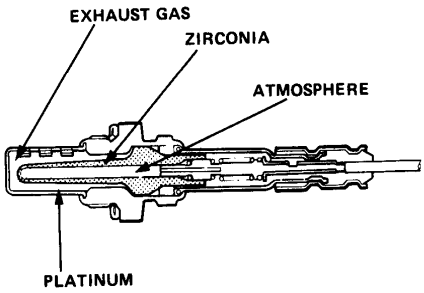

CAUTION: Keep all cleaning materials away from the sensor; they could contaminate it and make it stop working.

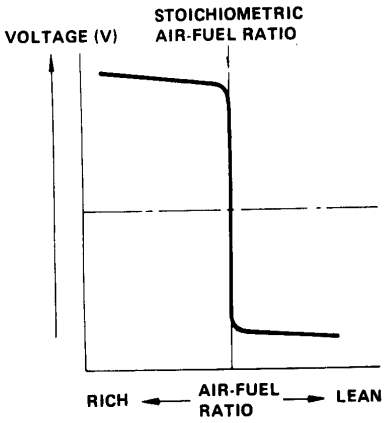

Starter Switch

The air-fuel mixture must be rich for starting. During cranking, the ECU detects signals from the starter switch and increases the amount of fuel injected into the manifold according to the engine temperature. The amount of fuel injected is gradually reduced when the starter switch is turned OFF.

Fuel System

Fuel Pump

The fuel pump is an in-line, direct drive type. Fuel is drawn into the pump through a filter, flows around the armature through the check valve and is delivered to the engine compartment. A pulsation damper is provided to prevent fuel pulsation.
The fuel pump has a relief valve to prevent excessive pressure. It opens if there is a blockage in the discharge side. When the relief valve opens, fuel just flows from the high pressure side to the low pressure side.
A check valve is provided to maintain fuel pressure in the line after the pump is stopped. This is to ease re-starting.

The pump section is composed of a rotor, rollers, and pump spacer as shown.
When the rotor turns, the rollers turn and travel along the inner surface of the pump spacer by centrifugal force.
The volume of the cavity enclosed by these three parts changes, drawing and pressurizing the fuel.

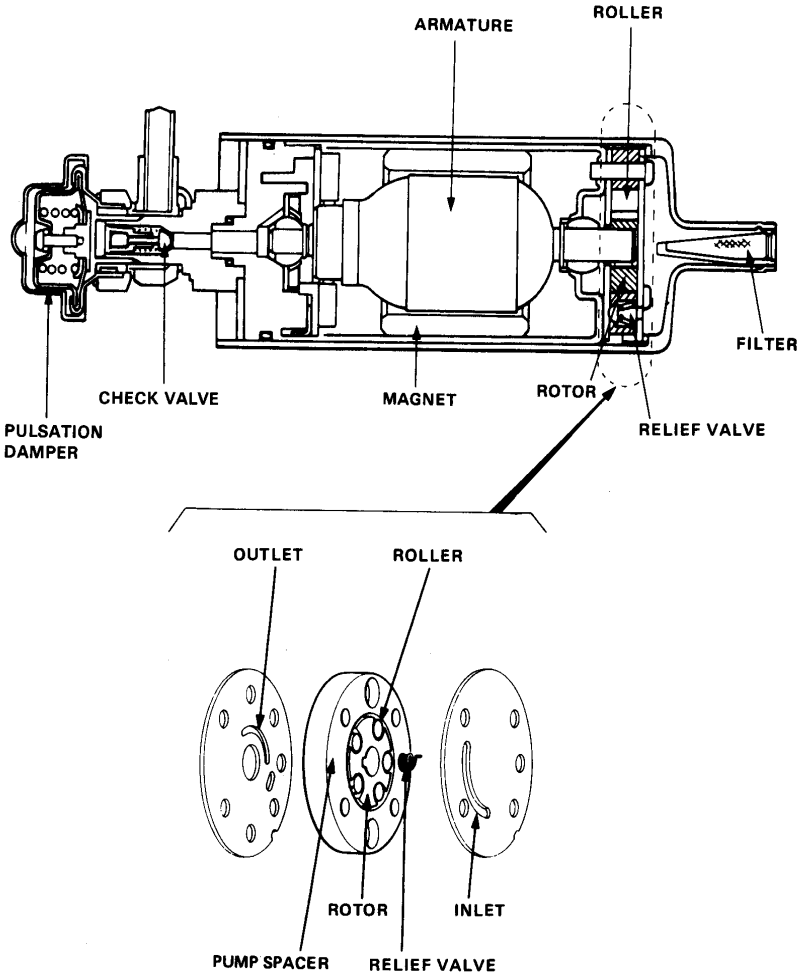

(cont'd)

Description

Fuel System (cont'd)

Pressure Regulator

The fuel pressure regulator maintains a constant fuel pressure to the injectors. When the difference between the fuel pressure and manifold pressure exceeds 2.55 kg/cm^2 (36 psi), the diaphragm is pushed upward, and the excess fuel is fed back into the fuel tank through the return line.

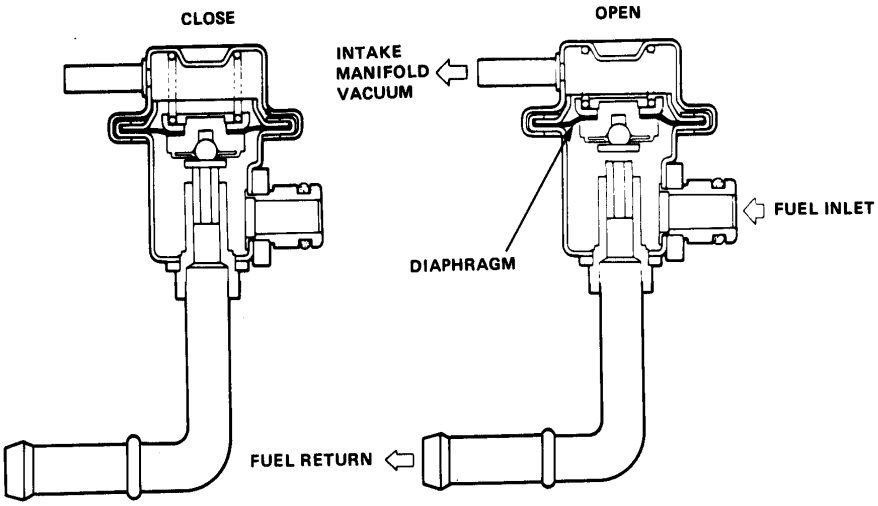

Fuel Injector

The injector is of the solenoid-actuated constant-stroke pintle type consisting of a solenoid, plunger, needle valve and hosing. When current is applied to the solenoid coil, the valve lifts up and pressurized fuel is injected close to the intake valve. Because the needle valve lift and the fuel pressure are constant, the injection quantity is determined by the length of time that the valve is open, (i.e., the duration the current is supplied to the solenoid coil). The injector is sealed by an O-ring and seal ring at the top and bottom. These seals also reduce operting noise.

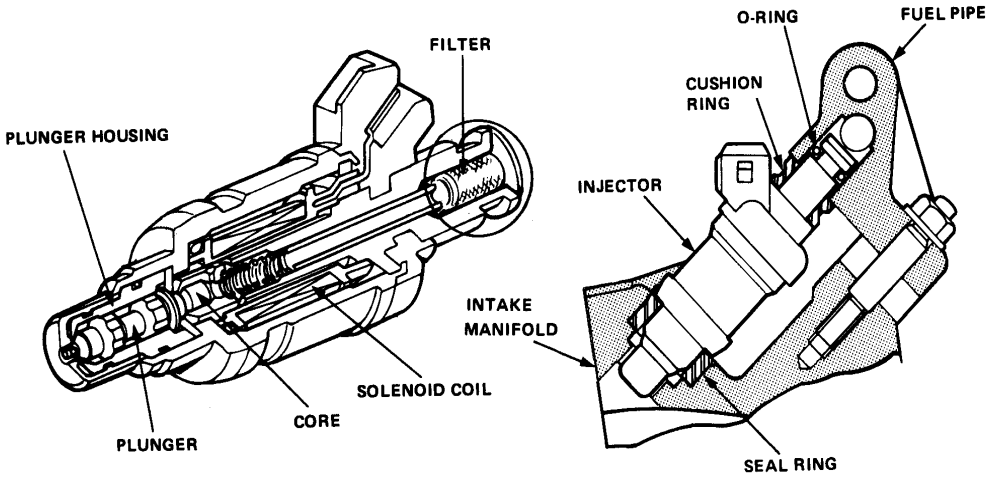

Injector Resistor

The resistor lowers the current supplied to the injectors to prevent damage to the injector coils. This allows a faster response time of the injectors.

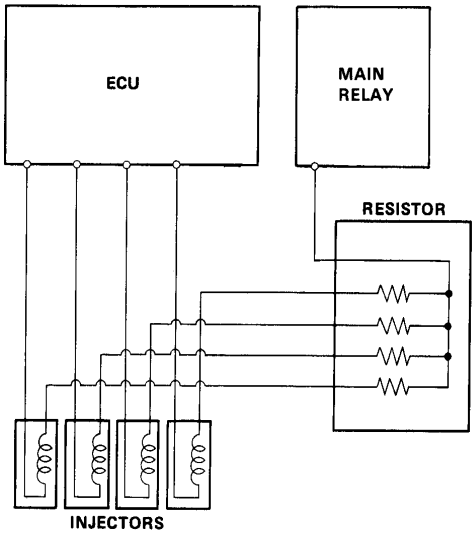

Main Relay

The main relay actually contains two individual relays. This relay is installed at the back of the fuse box. One relay in the main relay is energized whenever the ignition is on to supply battery voltage to the ECU, power to the injectors, and power for the second relay.

The second relay is energized for 2 seconds, when the ignition is switched on and when the engine is running to supply power to the fuel pump.

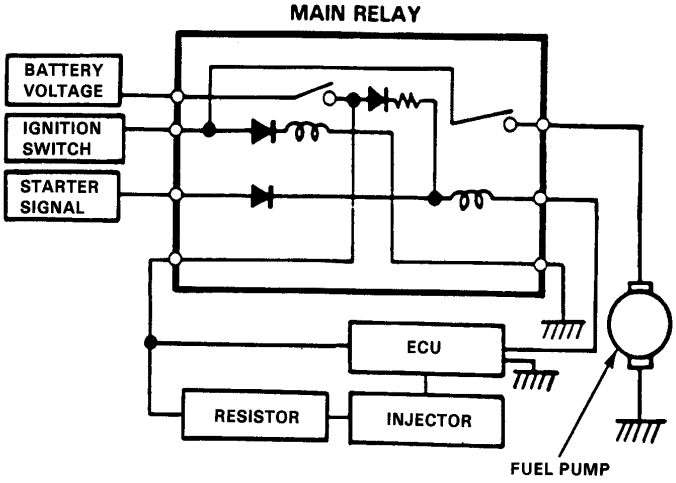

Description

Air Intake System

The system supplies air for all engine needs. It consists of the air cleaner, air intake pipe, throttle body, idle control system, fast idle mechanism, and intake manifold. A resonator in the air intake pipe provides additional silencing as air is drawn into the system.

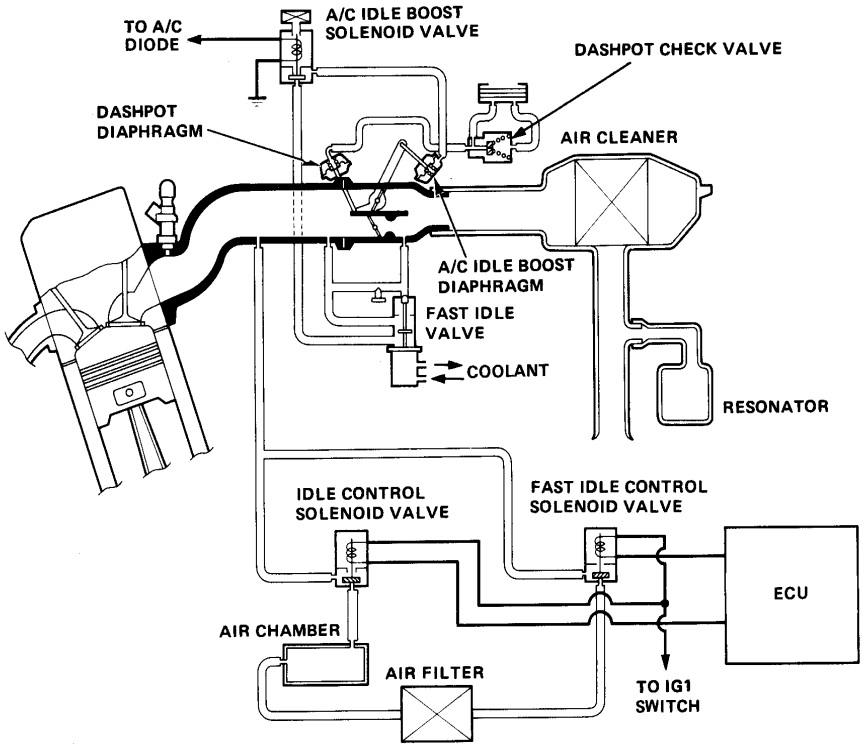

Throttle Body

The throttle body is a two-barrel side-draft type with the primary air horn at the top, The lower portion of the throttle valve is heated by engine coolant which is led from the cylinder head. A dashpot is used to slow the throttle as it approaches the closed position.

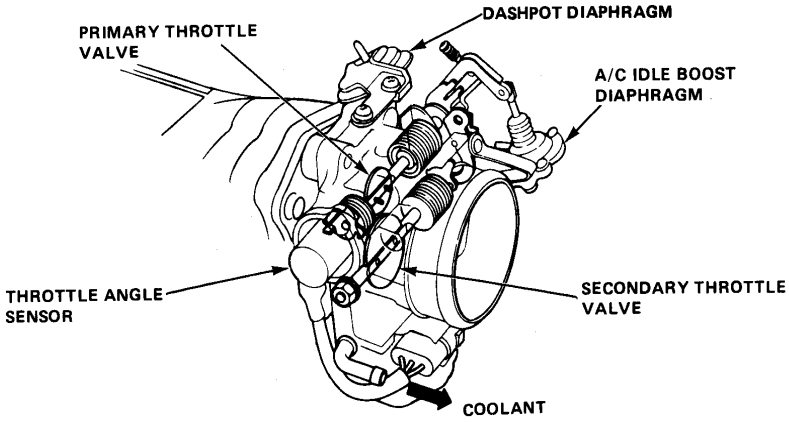

Idle Control System

The idle speed is controlled by the ECU and various solenoid valves such as the idle control, fast idle and A/C idle boost solenoid valves. With the exception of the A/C idle boost solenoid valve, these change the amount of air bypassing into the air into the air intake manifold. The A/C idle boost solenoid valve causes the A/C idle boost diaphragm to open the throttle valve.

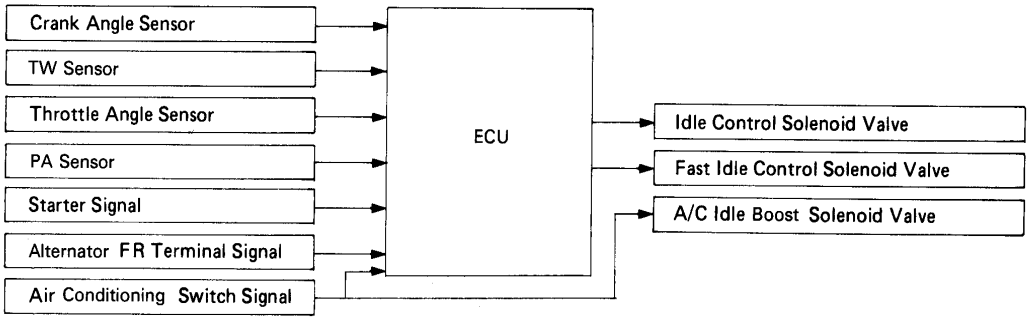

Idle Control Solenoid Valve

When the idle speed is reduced due to electrical, or other, loads on the engine, the valve opens to bypass additional air into the intake manifold. This additional air will allow the idle speed to increase to its normal speed (750 ± 50 rpm). The operation depends upon changes in the voltage at the FR terminal of the alternator for quick response. The valve also lowers the fast idle speed in steps during warm-up, after the coolant temperature has reached 55°C (131°F). To prevent erratic running after the engine first fires, the valve is opened during cranking and immediately after starting to provide additional air into the intake manifold.

Fast Idle Control Solenoid Valve

To prevent erratic running when the engine is cold, a higher idle speed is needed. When the engine is cold, the valve opens to bypass additional air into the intake manifold. This operation is dependent upon coolant temperature and atmospheric pressure. The valve is open with the temperature below −15°C(5°F) or below 40°C (104°F) at high altitude.

A/C Idle Boost Solenoid Valve

When the air conditioner is turned on, idle control solenoid valve and this valve open. This causes the A/C idle boost diaphragm to open the throttle valve which raises the idle speed to 750±50 rpm. The valve is also opened when coolant temperature is low (immediately after starting) therey ensuring stable idling regardless of position of the A/C switch.

(cont'd)

Description

Air Intake System (cont'd)

Idle Adjuster (Bypass Circuit)

The throttle body contains an adjustable bypass circuit. This circuit is designed to control the amount of air bypassing into the intake manifold without changing the position of the throttle valve.
Usually it is unnecessary to adjust idle speed by the idle adjusting screw since idle speed is adjusted automatically by the idle control system. Idle speed does not change by turning the idle adjusting screw while idle control system is in operation.

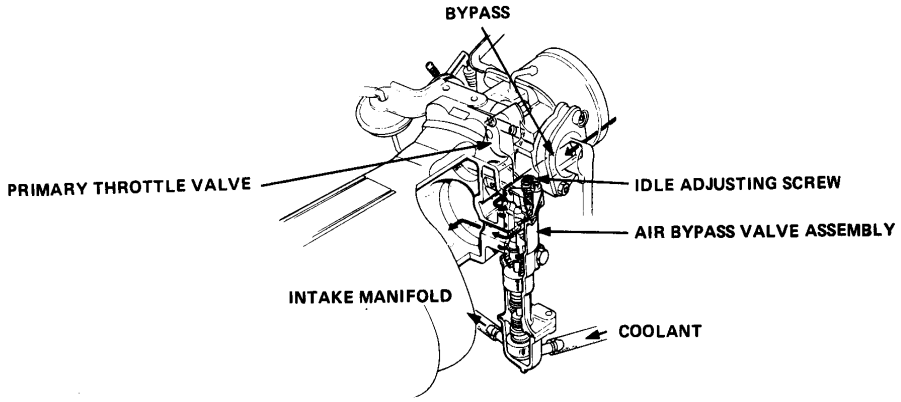

Fast Idle Mechanism

To prevent erratic running when the engine is warming up, it is necessary to raise the idle speed.
The fast idle air bypass valve is controlled by a thermowax plunger. When the engine is cold, the engine coolant surrounding the thermowax contacts the plunger, allowing additional air to be bypassed into the intake manifold so that the engine idles faster. When the engine reaches operating temperature, the valve closes, reducing the amount of air bypassing into the manifold.

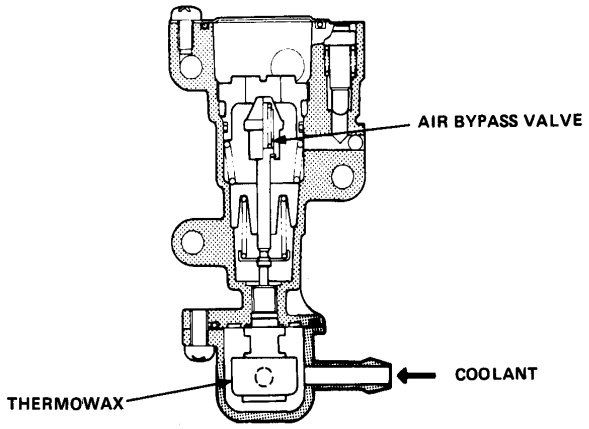

PGM-FI Control System

Troubleshooting

Before beginning to trowbleshoot the PGM-FI system, check that other items that affect engine performance are within specification. Check the valve clearance, air cleaner, and PCV valve. In addition, check the ignition timing, function of the vacuum and centrifugal advance, and the condition of the spark plugs. If those items are all within specifications, begin with the troubleshooting procedures listed on pages 11-50 and 11-51.

(cont'd)

PGM-FI Control System

Troubleshooting (cont'd)

SYMPTOM	CAUSAL PART	ELECTRONIC POWER SOURCE	ECU	INJECTOR	FUEL PUMP	FUEL LINE	FAST IDLE MECHANISM	THROTTLE BODY	CRANK ANGLE SENSOR	MAP SENSOR
ENGINE WON'T START	WHEN COLD	·BLOWN FUSE ·FAULTY MAIN RELAY	FAULTY ECU	·OPEN/SHORT CIRCUIT ·DAMAGED INJECTORS	·FAULTY PUMP/MAIN RELAY ·POOR GROUNDING	·FROZEN FUEL LINE ·BLOCKED FILTER			·OPEN/SHORT CIRCUIT ·FAULTY SENSOR	
	AT RESTARTING WHEN HOT	↑	↑	↑	↑				↑	
DIFFICULT TO START ENGINE	WHEN COLD		↑	·OPEN/SHORT CIRCUIT ·FAULTY INJECTOR	↑	·ICE IN FUEL LINE ·CLOGGED FILTER	·STUCK AIR BYPASS VALVE		↑	
	AT RESTARTING WHEN HOT		↑	↑ VAPOR LOCK	↑	VAPOR LOCK			↑	
IRREGULAR IDLING	WHEN COLD		↑	·OPEN/SHORT CIRCUIT ·STUCK INJECTOR			STUCK AIR BYPASS VALVE		↑	·OPEN/SHORT CIRCUIT ·BROKEN/DISCONNECTED HOSE ·FAULTY SENSOR
	AFTER WARMING UP		↑	↑			↑		↑	↑
	AFTER RESTARTING WHEN HOT		↑	↑ VAPOR LOCK		VAPOR LOCK	IDLE ADJUSTING SCREW OUT OF ADJUSTMENT		↑	↑
	RPM TOO HIGH						STUCK AIR BYPASS VALVE	THROTTLE VALVE STUCK OPEN		↑
	RPM TOO LOW						IDLE ADJUSTING SCREW OUT OF ADJUSTMENT			
FREQUENT STALLING	WHILE WARMING UP			·OPEN/SHORT CIRCUIT ·STUCK INJECTOR	·FAULTY PUMP/MAIN RELAY ·POOR GROUNDING	·IMPROPER LINE PRESSURE ·CLOGGED FILTER	STUCK AIR BYPASS VALVE			·OPEN/SHORT CIRCUIT ·BROKEN/DISCONNECTED HOSE ·FAULTY SENSOR
	AFTER WARMING UP		↑	↑	↑	↑	IDLE ADJUSTING SCREW OUT OF ADJUSTMENT		·OPEN/SHORT CIRCUIT ·FAULTY SENSOR	↑
POOR PERFORMANCE	POOR DRIVEABILITY HIGH FUEL CONSUMPTION		↑	↑	↑	↑	STUCK AIR BYPASS VALVE		↑	↑
	AFTERBURN		↑	↑						↑
	BACKFIRE		↑	↑	·FAULTY PUMP/MAIN RELAY ·POOR GROUNDING	·IMPROPER LINE PRESSURE ·CLOGGED FILTER				↑
	KNOCKING		↑	↑	↑	↑				
	LACK OF POWER AT LOW RPM		↑	↑	↑	↑				
	LACK OF POWER AT MID RPM		↑	↑	↑	↑				·OPEN/SHORT CIRCUIT ·BROKEN/DISCONNECTED HOSE ·FAULTY SENSOR
	LACK OF POWER AT HIGH SPEED		↑		↑	↑		SECONDARY VALVE NOT OPENED FULLY		↑
WARNING/ INDICATOR LIGHT TURNS ON	PGM-FI WARNING LIGHT	·BLOWN FUSE ·FAULTY MAIN RELAY	↑						·OPEN/SHORT CIRCUIT ·FAULTY SENSOR	↑
	SELF-DIAGNOSIS INDICATORS		↑						↑	↑

PA SENSOR	OXYGEN SENSOR	T W SENSOR	THROTTLE ANGLE SENSOR	T A SENSOR	I M A SENSOR	IDLE CON-TROL SYSTEM	IMPORTANT POINTS
							· CHECK FUEL PUMP/INJECTOR
							↑
(AT HIGH ALTITUDE) ·OPEN/SHORT CIRCUIT ·FAULTY SENSOR		·OPEN/SHORT CIRCUIT ·FAULTY SENSOR					· CHECK FUEL PUMP/INJECTOR · POSSIBLE TO START BY OPERATING THROTTLE? (STUCK AIR BYPASS VALVE)
							· CHECK FOR VAPOR LOCK IN INJECTOR · POSSIBLE TO START BY OPERATING THROTTLE? (VAPOR LOCK IN INJECTOR)
(AT HIGH ALTITUDE) ·OPEN/SHORT CIRCUIT ·FAULTY SENSOR		·OPEN/SHORT CIRCUIT ·FAULTY SENSOR					· CHECK IGNITION SYSTEM (SPARKS) AND EACH INJECTOR. POSSIBLE TO START BY OPERATING THROTTLE (STUCK AIR BYPASS VALVE)
						FAULTY SOLE-NOID VALVE	↑
							· CHECK FOR VAPOR LOCK IN FUEL LINE · CHECK PCV VALVE FOR CLOGGING BY OPERATING THROTTLE
							· DISCONNECTED OR LEAKY VACUUM LINES · CHECK AIR BYPASS VALVE · CHECK SELF DIAGNOSIS INDICATORS
			FAULTY SESOR				
		·OPEN/SHORT CIRCUIT ·FAULTY SENSOR		·OPEN/SHORT CIRCUIT ·FAULTY SENSOR			· CHECK AIR BYPASS VALVE · CHECK TW SENSOR
						FAULTY SOLE-NOID VALVE (RPM DOWN)	· CHECK IDLE SPEED · CHECK FOR FUEL CUT-OFF OPERATION
	·OPEN/SHORT CIRCUIT ·FAULTY SENSOR	·OPEN/SHORT CIRCUIT ·FAULTY SENSOR	·OPEN/SHORT CIRCUIT ·FAULTY SENSOR	·OPEN/SHORT CIRCUIT ·FAULTY SENSOR		FAULTY SOLE-NOID VALVE (STUCK OPEN)	· CHECK IGNITION TIMING · CHECK FOR FUEL CUT-OFF OPERATION
		↑	↑				↑
		↑	↑				· CHECK IGNITION TIMING · CHECK MAP SENSOR/ INJECTORS
		↑	↑				· CHECK IGNITION TIMING
	·OPEN/SHORT CIRCUIT ·FAULTY SENSOR	↑	↑				· CHECK IGNITION TIMING (DISCONNECTED OR BROKEN LINES) ·CHECK INJECTORS
	↑	↑	↑				· CHECK IGNITION TIMING
							· IS SECONDARY THROTTLE VALVE OPEN FULLY? · CHECK MAP SENSOR · CHECK IGNITION TIMING
·OPEN/SHORT CIRCUIT ·FAULTY SENSOR	·OPEN/SHORT CIRCUIT ·FAULTY SENSOR	·OPEN/SHORT CIRCUIT ·FAULTY SENSOR	·OPEN/SHORT CIRCUIT ·FAULTY SENSOR	·OPEN/SHORT CIRCUIT ·FAULTY SENSOR	·OPEN/SHORT CIRCUIT ·FAULTY SENSOR		· CONSULT TROUBLESHOOTING CHART ON PAGE 11-53
↑	↑	↑	↑	↑	↑		↑

(cont'd)

PGM-FI Control System

Troubleshooting (cont'd)

The PGM-FI system's ECU is equipped with a self-diagnosis function. When an abnormality is detected, the PGM-FI warning light and/or the LED display on the ECU come on. The location of the PGM-FI control system's trouble can be diagnosed from the LED display pattern. There are four LED displays. They are part of the ECU, which is located under the passenger's seat. They are numbered 1,2,4 and 8,as counted from right to left.

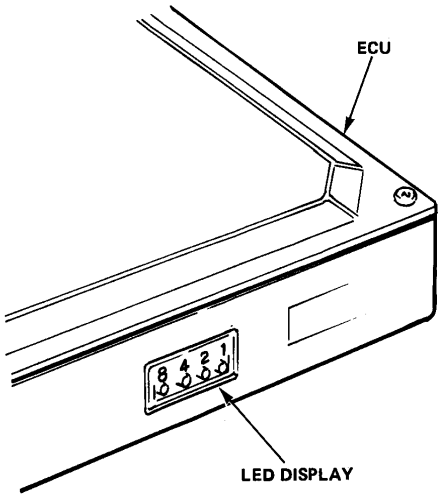

The quick reference chart on the next page covers the failure modes and possible causes for the PGM-FI. If you run through all the possible causes listed and the problem is still unsolved, go on to the more detailed troubleshooting on the following pages.

Sometimes the PGM-FI warning light and/or ECU LED display will come on, indicating a system problem, when, in fact, there is a bad or intermittent electrical connection. To troubleshoot bad connections, note the ECU LED display pattern, reter to the diagnosis chart on page 11-53 and check the connectors associated with the items mentioned in the "Possible Cause" column. Clear or repair connections if necessary.

NOTE:

- The memory for the LED display is maintained even when the ignition switch is turned off, the LED will display blinks when the ignition switch is turned on again.
  After making repairs, disconnect the No.10 fuse for at least 10 seconds to re-set the ECU memory. After reconnecting the fuse, check that the LED display is turned OFF.
- The memory for the "PGM-FI" warning light will be erased when the ignition switch is turned off; however, the memory for the LED display will not be cancelled. Thus, the warning light will not come on when the ignition is again turned on unless the trouble is once more detected. Troubleshooting should be done according to the LED display even if the warning light is OFF.
  If the LED display fails to come on when the ignition switch is turned on agais, check for:
  — Blown No. 10 fuse
  — Open circuit in White/Green wire between ECU A17 terminal and No.10 fuse.
  Then, if there is no problem, substitute a known-good ECU and re-check.
- Turn the ignition switch ON. The PGM-FI warning light should come on for about 2 seconds. If the warning light won't come on, check for:
  — Blown No. 3 fuse (also the fuse for the clock)
  — Open circuit in Yellow wire between No. 3 fuse and combination meter.
  — Open circuit in Green/Orange wire between combination meter and ECU B6 terminal.
  — Open circuit in Black wires between ECU A2, A4 and ground 1.
  — Blown warning light bulb
  Then, if there is no problem, substitute a known-good ECU and re-check.

LED Display	Symptom	Possible Cause	Page
○ ○ ○ ○ (Dash warning light off)	• Engine will not start.	• Loose or poorly connected power line to ECU • Disconnected control unit ground wire • Faulty ECU	54
○ ○ ○ ○ (Dash wasming light on)	• Engine will not start. • No particular symptom shown	• Disconnected control unit ground wire • Short circuit in combination meter or warning light wire • Faulty ECU	54
1 ○ ○ ○ ●	• No particular symptom shown • Erratic idling (Erratic injector, connector and wiring Insufficient fuel)	• Disconnected oxygen sensor connector • Spark plug mis-fire • Short or open circuit in oxygen sensor circuit • Faulty oxygen sensor	55
2 ○ ○ ● ○	• No particular symptom shown or system does not operate	• Faulty ECU	56
2 1 ○ ○ ● ●	• Fuel fouled plug • Frequent engine stalling • Hesitation	• Disconnected MAP sensor connector • Short or open circuit in MAP sensor wire • Faulty MAP sensor	56
4 ○ ● ○ ○	• No particular symptom shown or system does not operate	• Faulty ECU	56
4 1 ○ ● ○ ●	• Hesitation • Fuel fouled plug • Frequent enigne stalling	• Disconnected MAP sensor piping	57
4 2 ○ ● ● ○	• High idle speed during warm-up • High idle speed • Hard starting at low temperature	• Disconnected TW sensor connector • Open circuit in TW sensor wire • Faulty TW sensor	58
4 2 1 ○ ● ● ●	• Poor engine response to opening throttle rapidly • High idle speed • Engine does not rev up when cold	• Disconnected throttle angle sensor connector • Open or short circuit in throttle angle sensor wire • Faulty throttle angle sensor	58
8 ● ○ ○ ○	• Engine does not rev up • High idle speed • Erratic idling	• Short or open circuit in crank angle sensor wire • Crank angle sensor wire interfering with spark plug wires • Faulty crank angle sensor	59
8 1 ● ○ ○ ●	Same as above	Same as above	60
8 2 ● ○ ● ○	• High idle speed • Erratic idling when very cold	• Disconnected TA sensor connector • Open circuit in TA sensor wire • Faulty TA sensor	60
8 2 1 ● ○ ● ●	• No particular symptom shown • High idle speed	• Disconnected IMA sensor connector • Open or short circuit in IMA sensor wire • Faulty IMA sensor	61
8 4 ● ● ○ ○	• No particuar symptom shown or system does not operate at all.	• Faulty ECU	61
8 4 1 ● ● ○ ●	• Poor acceleration at high altitude • Hard starting at high altitude when cold	• Disconnected PA sensor connector • Open or short circuit in PA sensor wire • Faulty PA sensor	62
8 4 2 ● ● ● ○	• No particular symptom shown or system does not operate at all	• Faulty ECU	62
8 4 2 1 ● ● ● ●	Same as above	Same as above	62

NOTE: Some failure indications (such as when only the No. 1 indication is lit) require the full test procedures on the following pages to confirm that the failure has or has not been eliminated.

PGM-FI Control System

Troubleshooting Flow Chart

Use the system checker harness and digital multimeter to check the system.

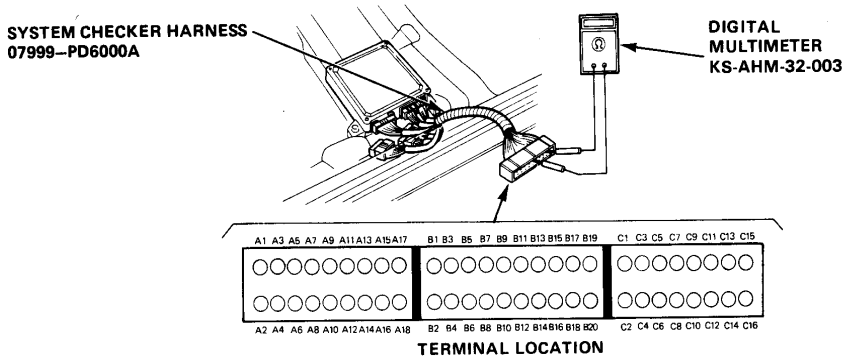

Self-diagnosis indicators remain off — The dash warning light is not lit.

Connect the system checker harness between the ECU and connector.

Check for continuity between the A2 (Black), the A4 (Black) terminals and body ground.

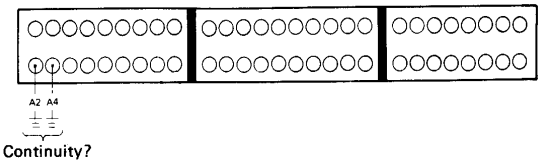

Does continuity exist?

NO — Faulty ground circuit at GND1.

YES

Turn the ignition switch ON.

Measure voltage between A15 (Yellow/Black (+)) terminal and the A4 terminal (Black (–)).

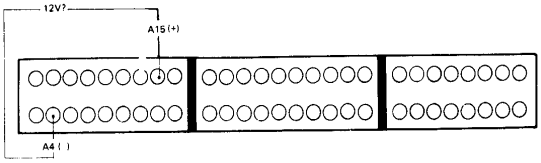

Is 12 V available?

NO — NOTE: No voltage available.
- Fuse (15A) blown
- Open circuit in Yellow/White wire between fuse (15A) and main relay
- Faulty main relay
- Open circuit in Yellow/Black wire between main relay and ECU
- No. 4 fuse (10A) blown (fuel pump is not working).
- Open circuit in Black/Yellow wire between No. 4 fuse and main relay
- Open circuit in main relay ground wire (Black)
- Faulty ECU

YES

Substitute a known-good ECU and re-check.
If symptom goes away, replace the original ECU.
If symptom does not go away, check to see if the dash warning light is on and the LED indicator now displays a pattern and troubleshoot the true cause.

Self-diagnosis indicators remain off-The dash warning light is lit.

Connect the system checker harness between the ECU and connector.

Check for continuity between the A16 (Brown/Black), the A18 (Black/Red) terminals and body ground.

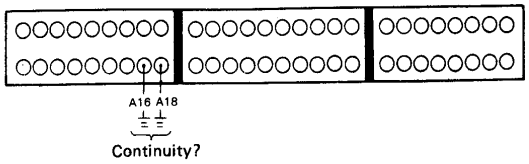

(To page 11-55)

(From page 11-54)

Does continuity exist?
- NO → Faulty ground circuit at GND 1.
- YES ↓

Check for short circuits in the Green/Orange wire between the combination meter and B6 terminal (Green/Red), as well as in the combination meter printed circuit board.

Are wires normal?
- NO → Faulty circuit or combination meter.
- YES ↓

Substitute a known-good ECU and re-check. If symptom/indication goes away, replace the original circuit board.

No. 1 indicator is lit (○ ○ ○ ✱)

NOTE: First, check the spark plugs.
Plug mis-fire can be another source of this trouble.

Warm up engine to normal operating temperature (cooling fan comes on).

Rev up and slow down engine between idle and 4,000 rpm quickly.

Stop engine.

Connect system checker harness between ECU and connector.

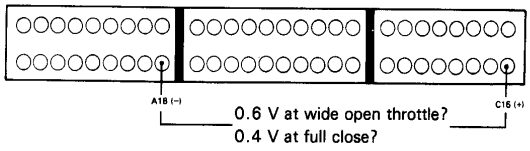

Attach positive probe of voltmeter to C16 terminal (White) of checker, and negative probe to A18 (Black/Red) terminal.

Re-start engine, then open the throttle wide open then close it.

Check that voltage rises over 0.6 V at wide open throttle, and falls below 0.4 V at full close.

Is votlage above 0.6 V ... below 0.4 V?
- NO → Stop engine.
  - Disconnect engine wire harness from oxygen sensor.
  - Check oxygen sensor (page 11-63).
  - Is oxygen sensor normal?
    - NO → Faulty oxygen sensor.
    - YES ↓
  - Check for open or short circuit in White wire between oxygen sensor and ECU.
  - (To page 11-56)
- YES ↓

(To page 11-56)

(cont'd)

PGM-FI Control System

Troubleshooting Flow Chart (cont'd)

(From page 11-55)

(From page 11-55)

Is wire normal? — NO → Faulty wire

YES

Disconnect system checker harness and re-connect ECU and connector.

Remove No. 10 fuse at least 10 seconds.

Warm up engine to operating temperature (cooling fan comes on).

Hold engine rpm at 1,500–2,000 for 10 minutes.

Does the PGM-FI warning light come on? — NO → Check for fuel system pages 11-74 thru 84.

YES

Substitute a known-good ECU and re-check, repeating the above five steps. If symptom/indication goes away, replace the original ECU.

No.2 indicator is lit (○ ○ ✱ ○)

Substitute a known-good ECU and re-check. If symptom/indication goes away, replace the original ECU.

No. 1 and No. 2 indicators are lit. (○ ○ ✱ ✱)

Connect system checker harness between the ECU and connector.

Turn ignition switch ON.

Measure voltage between C15 terminal (Red/White (+)) of system checker harness and C14 terminal (Blue/White (−)).

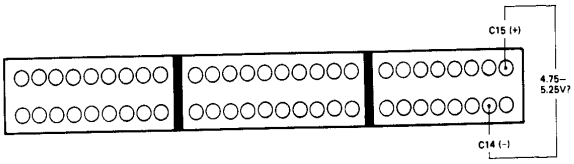

Is voltage between 4.75 and 5.25 V? — NO → Substitute a known-good ECU and re-check. If prescribed voltage is now available, replace the original ECU.

YES

Measure voltage between C11 terminal (White/Blue (+)) of system checker harness and C14 terminal (Blue/White (−)).

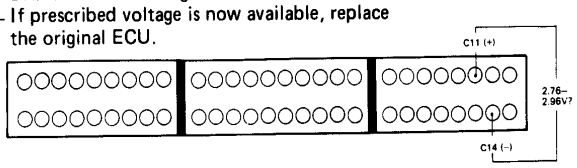

Is voltage between 2.76 and 2.96 V? — NO → Open or short circuit in Red. White or Brwon/White wire between MAP sensor and ECU. Faulty MAP sensor.

NOTE: If there is no voltage or if voltage is low, check for shorted wire, If voltage is high, wire may be open or bad contact. If the wire is normal, the MAP sensor is at fault.

YES

Substitute a known-good ECU and re-check. If symptom/indication goes away, replace the original ECU.

No. 4 indicator is lit (○ ✱ ○ ○)

Substitute a known-good ECU and re-check. If symptom/indication goes away, replace the original ECU.

No. 1 and No. 4 indicators are lit (○ ● ○ ●)

Check that the MAP sensor pipe is connected securely.

NOTE: Also check hose routing inside control box.

Is routing normal?

NO — Reconnect routing.

YES

Disconnect vacuum hose from MAP sensor and plug open end.

Disconnect vacuum hose (between the MAP sensor and throttle body) from throtle body.

Connect vacuum pump to vacuum hose (between the MAP sensor and throttle body) and check for leak.

Is vacuum maintained?

NO — Replace vacuum hose.

YES

Connect system checker harness between the ECU and connector.

Turn ignition switch ON.

Measure voltage between C15 terminal (Red/White (+)) of system checker harness and C14 terminal (Blue/White (–)).

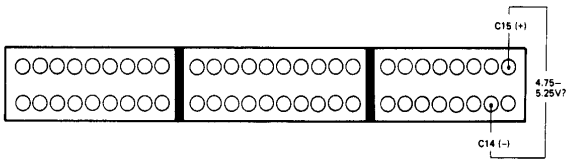

Is voltage between 4.75 and 5.25 V?

NO — Substitute a known-good ECU and re-check. If prescribed voltage is now available, replace the original ECU.

YES

Measure voltage between C11 terminal (White/Blue (+)) of system checker harness and C14 terminal (Blue/White (–)).

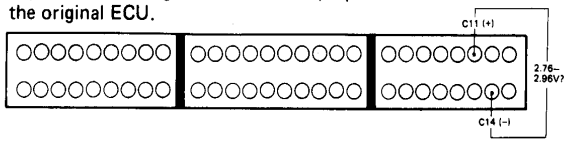

Is voltage between 2.76 and 2.96 V?

NO — Open or short circuit in Red, White or Brown/White wire between MAP sensor and ECU. Faulty MAP sensor.

NOTE: If there is no voltage or if voltage is low.check for shorted wire. If voltage is high, wire may be open or bad contact. If wire is normal, MAP sensor is at fault.

YES

Connect a vacuum pump to MAP sensor.

Check that voltage changes as vacuum is applied.

Has voltage changed?

NO — Faulty MAP sensor.

YES

Substitute a known-good ECU and re-check. If symptom/indication goes away, replace the original ECU.

(cont'd)

PGM-FI Control System

Troubleshooting Flow Chart (cont'd)

No. 2 and No. 4 indicators are lit (○ ✱ ✱ ○)

Connect system checker harness between the ECU and connector.

Warm up engine to normal operating temperature (cooling fan comes on).

Measure voltage between C6 terminal (Yellow/Green (+)) of system harness checker and C12 terminal (Green/White (−)).

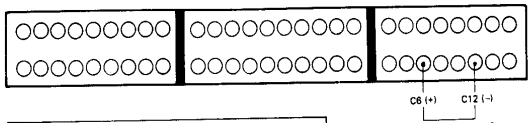

Is voltage between 0.50 and 0.90 V?

NO → Stop engine.

Check TW sensor (page 11-64).

Is sensor normal?

NO → Faulty TW sensor.

YES

Check for open or short circuit in Red/White and Brown/Black wires between TW sensor and the ECU.

NOTE: If there is no voltage or if voltage is low, check for shorted wire. If voltage is high, wire may be open or bad contact.

Are wires normal?

NO → Faulty wires.

YES

Substitute a known-good ECU and re-check. If prescribed voltage is now available, replace the original ECU.

YES

Substitute a known-good ECU and re-check. If symptom/indication goes away, replace the original ECU.

No. 1, No. 2 and No. 4 indicators are lit (○ ✱ ✱ ✱)

Connect system checker harness between ECU and connector.

Turn ignition switch ON.

Measure voltage between C13 terminal (Yellow/White (+)) of system checker harness and C12 terminal (Green/White (−)).

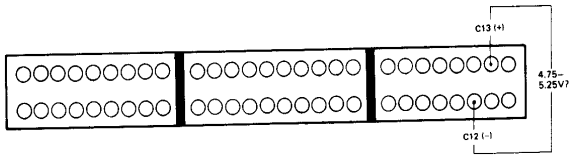

Is 4.75—5.25 V attained?

NO → Substitute a known-good ECU and re-check. If prescribed voltage is now available, replace the original ECU.

YES

Connect voltmeter positive probe to C7 terminal (Red/Yellow (+)), and negative probe to C12 terminal (Green/White (−)) of system checker harness.

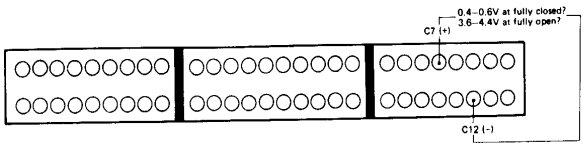

(To page 11-59)

(From page 11-58)

Operate accelerator pedal from fully closed to fully open.

Check that 0.4–0.6 V is available at fully closed, and 3.6–4.4 V at fully open.

Are voltages within above ranges?

- NO → Check throttle angle sensor (page 11-65).
  - Is sensor normal?
    - NO → Faulty throttle angle sensor.
    - YES → Check for short or open circuit in Yellow/Red, Red/Blue and Brown/Black wires between the ECU and throttle angle sensor.
      - Are wires normal?
        - NO → Faulty wires.
        - YES → Substitute a known-good ECU and re-check. If symptom/indication goes away, replace the original ECU.
- YES → Substitute a known-good ECU and re-check. If symptom/indication goes away, replace the original ECU.

No. 8 indicator is lit (● ○ ○ ○)

Check for open or short circuit in Orange/Blue and White/Blue wires between the ECU and crank angle sensor.

NOTE: Check that crank angle sensor harness is not interferring with the spark plug wires.

Are wires normal?

- NO → Replace wires.
- YES → Check crank angle sensor (page 11-64).
  - Does crank angle sensor operate properly?
    - NO → Faulty crank angle sensor.
    - YES → Substitute a known-good ECU and re-check. If symptom/indication goes away, replace the original ECU.

(cont'd)

PGM-FI Control System

Troubleshooting Flow Chart (cont'd)

No. 1 and No. 8 indicators are lit (● ○ ○ ●)

Check for open or short circuit in Orange and White wires between the ECU and crank angle sensor.

NOTE: Check that sensor harness is not interferring with the spark plug wires.

Are wires normal? — NO → Replace wires.

YES

Check crank angle sensor (page 11-64).

Is sensor normal? — NO → Faulty crank angle sensor.

YES

Substitute a known-good ECU and re-check. If symptom/indication goes away, replace the original ECU.

No. 2 and No. 8 indicators are lit (● ○ ● ○)

Connect system checker harness between the ECU and harness connector.

Attach voltmeter positive probe to C5 terminal (White/Red (+)), and negative probe to C12 terminal (Green/White (−)) of system checker harness.

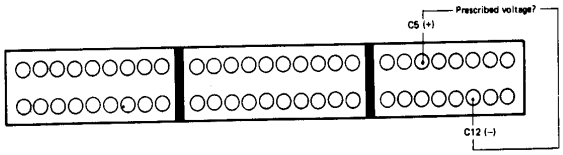

Turn ignition switch ON.

Check that voltage is correct for the intake air temperature.

Is voltage correct? — NO → Check TA sensor (page 11-64).

YES

Substitute a known-good ECU and re-check. If symptom/indication goes away, replace the original ECU.

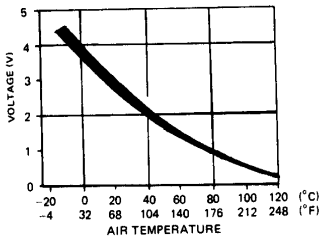

Is sensor normal? — NO → Faulty TA sensor.

YES

Turn ignition switch OFF.

Check for open or short circuit in Red/Yellow and Brown/Black wires between TA sensor and the ECU.

NOTE: If voltage is low, or there is no voltage, check wires for short circuit. If voltage is high, check for an open or bad contact.

Are wires normal? — NO → Faulty wires.

YES

Substitute a known-good ECU and re-check. If prescribed voltage is now available, replace the original ECU.

No. 1, No. 2 and No. 8 indicators are lit (● ○ ● ●)

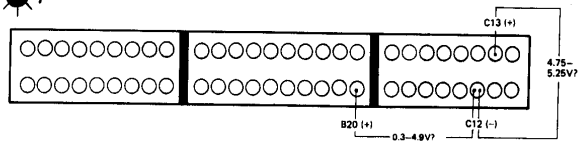

Connect system checker harness between the ECU and harness connector.

Turn ignition switch ON.

Measure voltage between C13 terminal (Yellow/White (+)) of system checker harness and C12 terminal (Green/White (–)).

Is 4.75–5.25V available?
- NO → Substitute a known-good ECU and re-check. If prescribed voltage is now available, replace the original ECU.
- YES ↓

Measure voltage between B20 terminal (Brown (+)) of system checker harness and C12 terminal (Green/White (–)).

Is 0.3–4.9 V available?
- NO → Check IMA sensor (page 11-63).
- YES ↓

Substitute a known-good ECU and re-check. If symptom/indication goes away, replace the original ECU.

Does sensor operate properly?
- NO → Faulty IMA sensor.
- YES ↓

Turn ignition switch OFF.

Check for open or short circuit in Yellow/Red, White/Yellow and Brown/Black wires between IMA sensor and the ECU.

NOTE: If there is no voltage, check for short circuit in the wires. If voltage is high, check for an open or bad contact.

Are wires normal?
- NO → Faulty wires.
- YES ↓

Substitute a known-good ECU and re-check. If prescribed voltage is now available, replace the original ECU.

No. 4 and No. 8 indicators are lit (● ● ○ ○)

Substitute a known-good ECU and re-check. If symptom/indication goes away, replace the original ECU.

(cont'd)

PGM-FI Control System

Troubleshooting Flow Chart (cont'd)

No. 1, No. 4 and No. 8 indicators are lit (● ● ○ ●)

Connect system checker harness between the ECU and harness connector.

Turn ignition switch ON.

Measure voltage between C13 terminal (Yellow/White (+)) of system checker harness and C12 terminal (Green/White (−)).

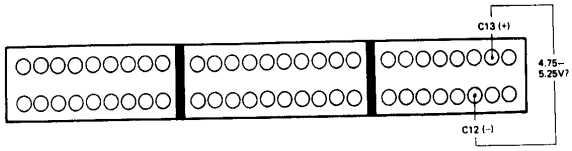

Is 4.75–5.25 V available?

NO — Substitute a known-good ECU and re-check. If prescribed voltage is now available, replace the original ECU.

YES

Measure voltage between C9 terminal (Red (+)) of system checker harness and C12 terminal (Green/White (−)).

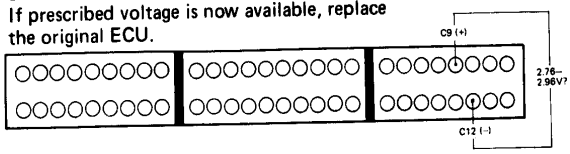

Is 2.76–2.96 V available?

NO — Open or short circuit in Yellow/Red, Red or Brown/Black wire between PA sensor and ECU.

Faulty PA sensor.

YES

Substitute a known-good ECU and re-check. If symptom/indication goes away, replace the original ECU.

NOTE: If there is no voltage or if voltage is low, check for shorted wire. If voltage is high, wire may be open or bad contact.
If the wire is normal, the PA sensor is at fault.

No. 2, No. 4 and No. 8 indicators are lit (● ● ● ○)

Substitute a known-good ECU and re-check. If symptom/indication goes away, replace the original ECU.

All indicators are lit (● ● ● ●)

Substitute a known-good ECU and re-check. If symptom/indication goes away, replace the original ECU.

Sensors

Oxygen Sensor Test

1. Disconnect the connector of the oxygen sensor.
2. Start the engine and warm up for 2 minutes at 3,000 rpm under no load. Raise the engine speed to 4,000 rpm and release the throttle suddenly at least 5 times.
3. Within one minute after the engine has been warmed up, measure the voltage between the connector terminal and body ground as described in steps 4 and 5.

   NOTE: If it takes more than one minute to complete the checks, warm up the engine as in step 2 before continuing.
4. Raise the engine speed to 5,000 rpm, then lower to 2,000 rpm by operating the accelerator pedal.

   Voltage should be below 0.4 V.
5. Disconnect the vacuum hose (between the MAP senor and the throttle body) from the throttle body; plug the opening in the throttle body. Connect a vacuum pump to open the end of the vacuum hose and apply 300 mmHg, and raise the engine speed to 4,000 rpm.

   Voltage should be above 0.6 V.

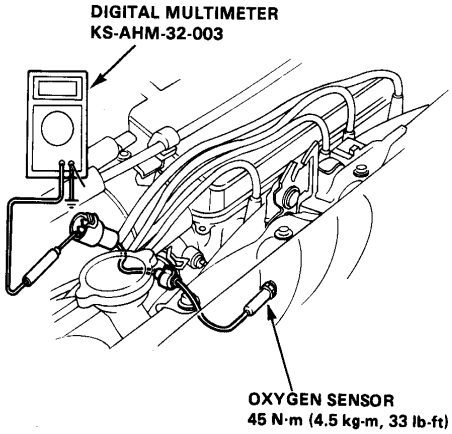

- Replace the oxygen sensor if the voltages are out of the above ranges.

NOTE:
- Avoid damaging the wire harness.
- To prevent cross-threading, first tighten finger tight, then tighten to the specified torque with a torque wrench.
- Oxygen sensor does not operate when its intake is clogged.
- Be extremely careful not to spray anything over the oxygen sensor.

IMA Sensor Test

1. Measure resistance at the control box connector.

   There should be: 0.25–6.2 kΩ

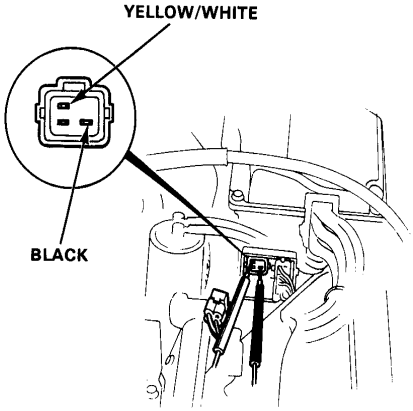

- Replace the IMA sensor if the resistances are out of the above ranges.

2. Open the control box lid and remove the rivets attaching IMA sensor. Disconnect the IMA sensor 4-P connector.

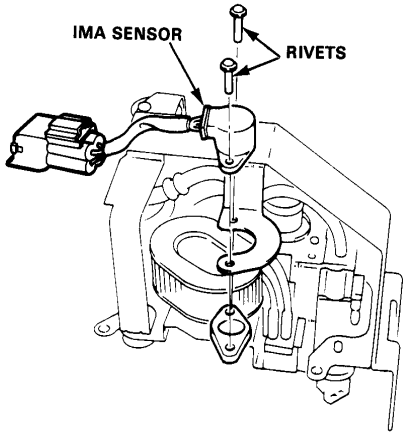

Sensors

TA/TW Sensor Test

1. Disconnect the connector, then remove the TA/TW sensor from the intake manifold/cylinder head.
2. To test a sensor, suspend it in cold water and heat the water slowly. Make sure more than half of the connector is submerged. Measure the resistance between the terminals.
   STANDARDS: 0.98–1.34 kΩ at 40°C (95°F)
   0.22–0.35 kΩ at 80°C (176°F)

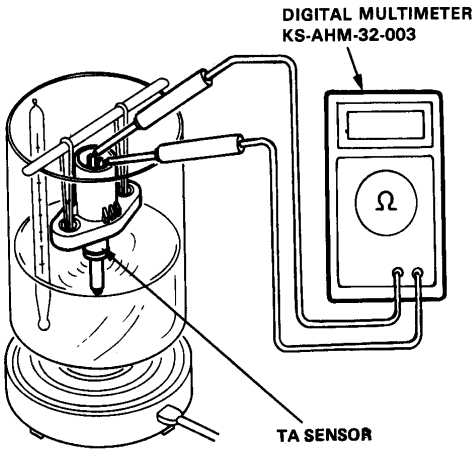

3. The chart below shows the change in resistance over a range of intake air/coolant temperature.

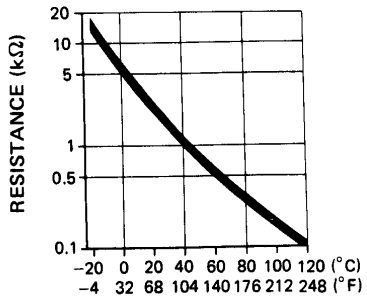

- Replace the sensor if resistance is outside the range.
- On installing the TW sensor, torque to 28 N·m (2.8 lg-m, 20 lb-ft)

NOTE:
- Don't let the sensor touch the bottom of the container.
- During the test, stir the water in the container to ensure even temperature.

Crank Angle Sensor Test

NOTE: If either the CYL or TDC sensor tests bad, replace the crank angle sensor assembly.

CYL Sensor Inspection

1. Disconnect the connector of the CYL sensor.
2. Measure the resistance between the white terminal and red terminal at the sensor.
   Resistance should be: 0.65–0.85 kΩ

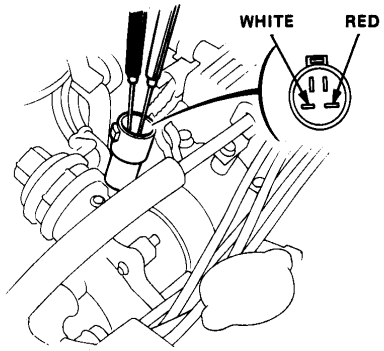

3. Check for continuity between the white terminal and body ground, and the Red terminal and body ground at the terminals.
   Continuity should not exist.

TDC Sensor Inspection

1. Disconnect the connector of the crank angle sensor.
2. Measure the resistance between the brown terminal and blue terminal at the sensor.
   Resistance should be: 0.65–0.85 kΩ

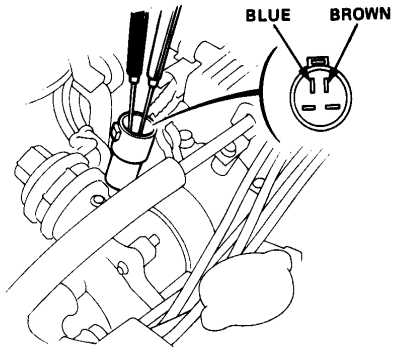

3. Check for continuity between the Blue terminal and body ground, and the Brown terminal and body ground at the terminals.
   Continuity should not exist.

Crank Angle Sensor Replacement

Removal:
1. Remove the distributor (section 23).
2. Remove the crank angle sensor assembly from the distributor.

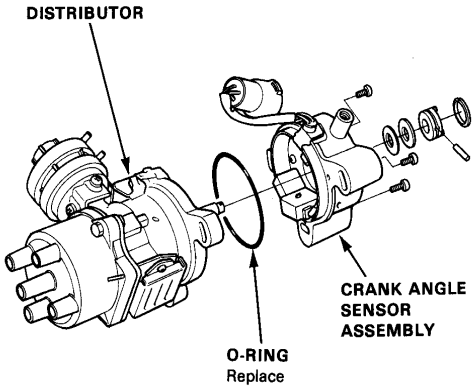

Installation:
1. Install a new O-ring.
2. Install the sensor to the distributor.

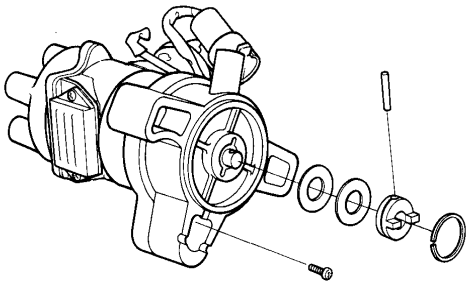

3. Install the distributor to the cylinder head (section 23).

Throttle Angle Sensor Test

CAUTION: The throttle stop screw is non-adjustable.

1. Disconnect the connector of the throttle angle sensor.
2. Measure the resistance between the Brown/Black terminal and Yellow/Red terminal at the sensor.
   Resistance should be: 3.2–7.2 kΩ

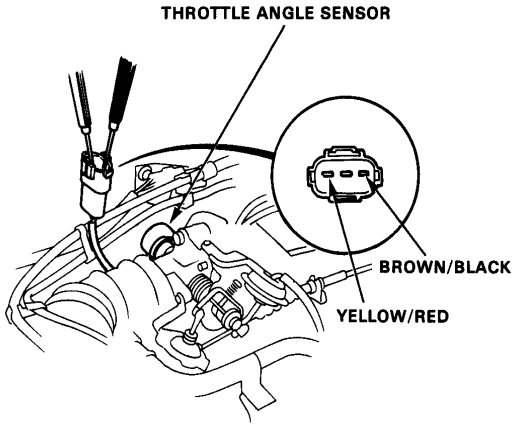

- If the resistance is outside the above range, replace the throttle angle sensor.

Idle Control

Troubleshooting

Part / Page / Symptom	Idle control solenoid valve	Fast idle control solenoid valve	A/C idle boost solenoid valve	A/C idle diaphragm	Throttle body
	69, 71	70, 72	—	—	86
Idle speed does not increase after initial start-up.	Valve failure/ pinched				
Idle speed too high in neutral.	Leaky solenoid valve	Leaky solenoid valve	Valve failure		Valve stuck open
Idle speed changes under electrical load.	Valve failure/ pinched				Throttle angle sensor out of adjustment
Idle speed drops when blipping throttle with electrical load.					
Idle speed drops when A/C switch is turned ON.	Valve failure/ pinched	Valve failure/ pinched	Valve failure/ pinched	Adjusting screw B out of adjustment	
Idle speed fluctuates when idle control comes into operation.	Valve failure				
Fast idle speed too low at high altitude (above 1,200 m, 4,000 ft)		Valve failurel pinched			

* — If bypass passages are blocked, a low idle speed will result.
— If hoses or bypass passages are leaking, a high idle speed will result.

Fast idle mechanism	Starter switch signal	Alternator FR terminal signal	A/C switch signal	ECU	*Hoses and connections	Remarks
88	68	68	69	49		
Screw out of adjustment	Open circuit			Failure in ECU	Broken/disconnected hose	Is signal available at ECU?
↑ Leaky fast idle valve				Failure (signal not stopped)	↑	• Pinch idle control solenoid valve hose and readjust. • Any intake or bypass leak.
Screw out of adjustment				Failure (signal not available)	↑	Is idle control solenoid valve working?
		Open circuit		Failure in ECU	↑	Is there big differance between no load and loaded conditions?
Opener out of adjustment			Open circuit	↑	↑	• Is vacuum applied to A/C idle boost diaphragm? • Is A/C idle boost diaphragm operating adjusted properly?
				↑	↑	Is condition improved when solenoid valve is replaced?
Opener out of adjustment					↑	

Idle Control

Troubleshooting Flow Chart

Starter Switch Signal Inspection

Connect system checker harness between ECU and wire harness connector.

Turn ignition switch to START.

Measure voltage between B13 terminal (Blue/Red (+)) and A18 terminal (Black/Red (−)) of system checker harness.

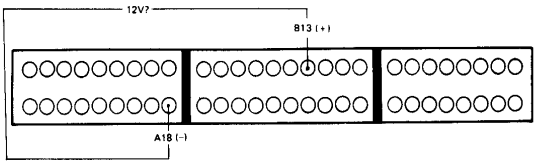

Is battery voltage available?

- NO → Blown No.1 fuse (10A)
- NO → Open circuit in Blue/White wire between No.1 Fuse (10A) and ECU

Alternator FR Terminal Signal Inspection

Before inspection, check operation of alternator as follows:
With the engine running, and the #10 vacuum hose pinched (to cut off the idle control system), turn the headlight ON and OFF.
Engine speed should change. If engine speed remains steady, re-charge battery and re-test.

Connect system checker harness between ECU and wire harness connector.

Attach positive probe of voltmeter to B14 terminal (White/Red (+)), and negative probe to A18 terminal (Black/Red (−)) of system checker harness.

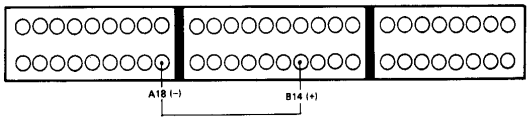

Start engine.

Turn headlights ON and OFF.

Check that voltage drops when headlights are ON, and rises when headlights are OFF, within 0 and 5 V.

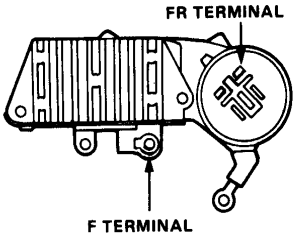

Is voltage changed?

- NO → Stop engine.

Check for continuity in White/Red wire between alternator and ECU.

NOTE: FR terminal diode is faulty if continuity or no continuity exists in both directions between F and FR terminals of voltage regulator.

Is there continuity?

- NO → Open circuit in harness
- YES → Faulty voltage regulator or alternator

Air Conditioner Switch Signal Inspection

Connect system checker harness between ECU and wire harness connector.

Start engine.

Turn the blower switch ON.

Turn the A/C switch ON.

Check that compressor and condenser cooling fan work.

Measure voltage between B8 terminal (Blue/Red (+)) and A18 terminal (Black/Red (−)) of system checker harness.

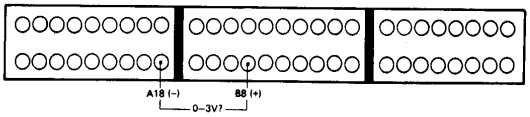

Is 0–3 V available?

NO — Open circuit in Blue/Red wire between A/C diode connector and ECU.

NOTE: Voltage will be over 9 V if compressor or condenser cooling fan stops when power is cut-off by pressure switch or thermostat.

Idle Control Solenoid Valve Inspection

Connect system checker harness between ECU and wire harness connector.

Attach positive probe of voltmeter to A11 terminal (Green/Black (+)) and negative probe to A18 terminal (Black/Red (−)) of system checker harness.

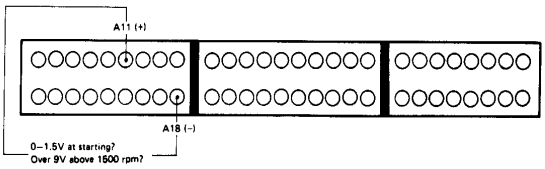

Start engine.

NOTE: Measure within 10 seconds.

Is 0–1.5 V available?

NO —
- Open circuit in Black/Yellow wire between No. 4 fuse (10A) and idle control solenoid valve.
- Open circuit in Green/White wire between idle control solenoid valve and ECU.
- Open circuit in idle control solenoid valve.

NOTE: No voltage available.

- Faulty ECU. NOTE: Voltage should be above 9 V.

Raise engine speed over 1,500 rpm.

Is more than 9 V available?

NO — Faulty ECU.

(cont'd)

Idle Control

Troubleshooting Flow Chart (cont'd)

Fast Idle Control Solenoid Valve Inspection

Connect system checker harness between ECU and wire harness connector.

Start engine.

Measure voltage between B4 terminal (Blue/Black (+)) and A18 terminal (Black/Red (−)) of system checker harness.

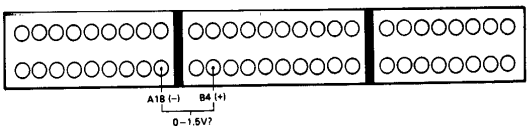

NOTE: Measurements should be taken when the atmospheric pressure is below 660 mmHg.

Is 0 − 1.5 V available?

NO

- Open circuit in Black/Yellow wire between No. 4 fuse (10A) and fast idle control solenoid valve
- Open circuit in Green/Yellow wire between fast idle control solenoid valve and ECU
- Open circuit in fast idle control solenoid valve
- Faulty ECU. NOTE: voltage should be above 9V.

NOTE: No voltage available.

Idle Control Solenoid Valve Test

The idle control solenoid valve is activated by commands from the ECU. When the solenoid valve opens, this causes vacuum in the upper vacuum hose of the solenoid valve (between the air filter and the solenoid valve)and increases idle speed under the following conditions.

- For a short period after starting the engine.
- Whenever electrical loads are turned ON (vacuum will disapper when engine speed is raised over 1,700rpm by operating the throttle).

When the valve is open, 9V or more should be available between the Black/Yellow terminal (+) and the Green/White terminal (−) of main wire harness at the control box.

1. Open the control box lid and disconnect the 8-P connector.

2. Disconnect the upper vacuum hose of the idle control solenoid valve from the 3-way joint, and connect a vacuum pump to the hose.

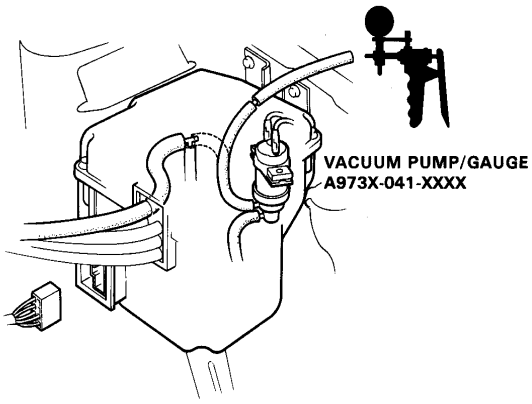

3. Apply vacuum to the hose.

   It should hold vacuum.

   - If it does no hold vacuum, check the vacuum line and replace the solenoid valve and re-test.

4. Attach the battery positive terminal to the Black serminal of the control box connector and battery negative terminal to the Light Green terminal.

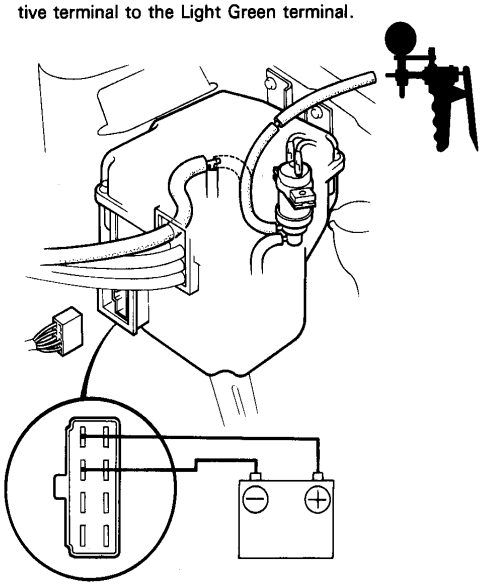

5. Apply vacuum to the hose.

   It should not hold vacuum.

   - If it holds vacuum, check the vacuum line and replace the solenoid valve and re-test.

Idle Control

Fast Idle Control Solenoid Valve Test

The fast idle control solenoid valve is open when the atmospheric pressure is 660mmHg or less. Vacuum is produced in the vacuum hose (between the solenoid valve and air filter).

When the valve is open, 9 V or more should be available between the Black/Yellow terminal (+) and the Green/Yellow terminal (−) of main wire harness at the control box.

1. Open the control box lid and disconnect the 8-p connector.
2. Disconnect the lower vacuum hose of the fast idle control solenoid valve from the 3-way joint, and connect vacuum pump to the hose.

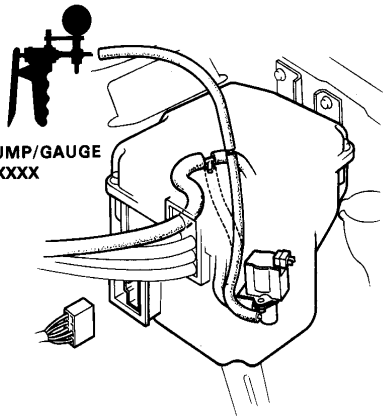

3. Apply vacuum to the hose.

   It should hold vacuum.

   - If it does not hold vacuum, check the vacuum line and replace the solenoid valve and re-test.

4. Attach the battery positive terminal to the Black terminal of the control box connector and battery negative terminal to the Yellow terminal.

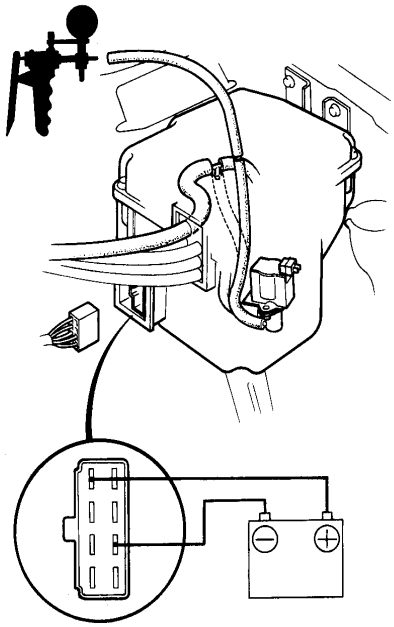

5. Apply vacuum to the hose.

   It should not hold vacuum.

   - If it holds vacuum, check the vacuum line and replace the solenoid valve and re-test.

Idle Speed Inspection/Adjustment

1. Start the engine and warm it up to normal operating temperature (cooling fan comes on).
2. Connect a tachometer.
3. Disconnect the #10 vacuum hose from the intake manifold.
4. Cap the end of the hose and intake manifold.

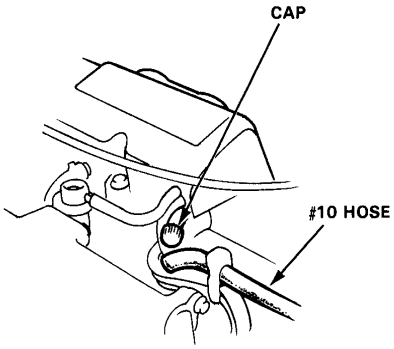

5. Check the idle speed with headlights, heater blower, rear window defogger, cooling fan and air conditioner off.

   Idle speed should be: 750±50rpm

   Adjust the idle speed, if necessary, by turning the adjusting screw on the top of the throttle body.

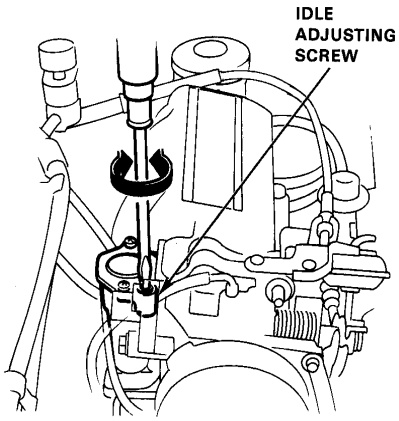

- If idle speed cannot be adjusted by turning the idle adjusting screw, check the fast idle valve (page 11-72).

6. Check the idle speed with the A/C on.

   Idle speed should be; 750±50rpm

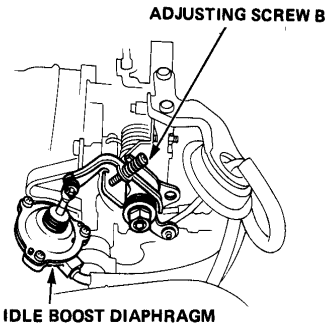

Adjust the idle speed, if necessary, by turning adjusting screw B.

Fuel Pressure

Test

1. Relieve fuel pressure.
2. Remove the service bolt on the top of the fuel filter while holding the banjo bolt with another wrench and attach the fuel pressure gauge.
3. Start the engine. Measure the fuel pressure with the engine idling and the vacuum hose of the pressure regulator disconnected.

Pressure should be:
250–279 kPa (2.55–2.85 kg/cm², 36–41 psi)

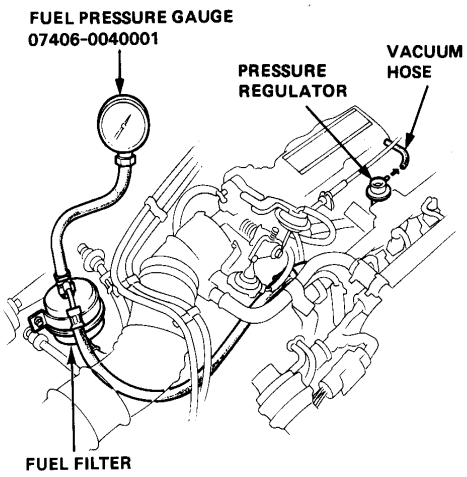

- If the fuel pressure is not as specified, first check the fuel pump (page 11-79). If the pump is OK, check the following:

  – If the pressure is higher than specified, inspect for:
  - Pinched or clogged fuel return hose or piping.
  - Faulty pressure regulator (page 11-77).

  – If the pressure is lower than specified, inspect for:
  - Clogged fuel filter.
  - Pinched or clogged fuel hose from the fuel tank to the fuel pump.
  - Pressure regulator failure (page 11-77).
  - Leakage in the fuel line.

Relieving

WARNING
- **Do not smoke while working on the fuel system. Keep open flames or sparks away from the work area.**
- **Be sure to relieve fuel pressure while the engine is off.**

NOTE: Before disconnecting fuel lines or hoses, release pressure from the system by loosening the 6 mm service bolt at top of the fuel filter.

1. Disconnect the battery negative cable from the battery negative terminal.
2. Use a box end wrench on the 6 mm service bolt on top of the fuel filter, while holding the special banjo bolt with another wrench.
3. Place a rag or shop towel over the 6 mm service bolt.
4. Slowly loosen the 6 mm service bolt one complete turn.

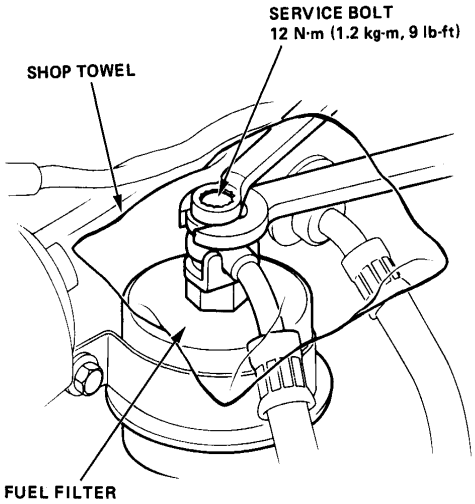

NOTE:
- A fuel pressure gauge can be attached at the 6 mm service bolt hole.
- Always replace the washer between the service bolt and the special banjo bolt, whenever the service bolt is loosened to relieve fuel pressure.
- Replace all washers whenever the bolts are removed to disassemble parts.

Fuel Injectors

Test

NOTE: Check the following items before testing: idle speed, ignition timing, valve clearance and idle CO%.

If the engine will run:

1. With the engine idling, disconnect each injector connector individually and inspect the change in the idling speed.
   - If the idle speed drop is almost the same for each cylinder, the injectors are normal.
   - If the idle speed or quality remains the same when you disconnect a particular injector, replace the injector and re-test.
2. Check the clicking sound of each injector by means of a stethoscope when the engine is idling.

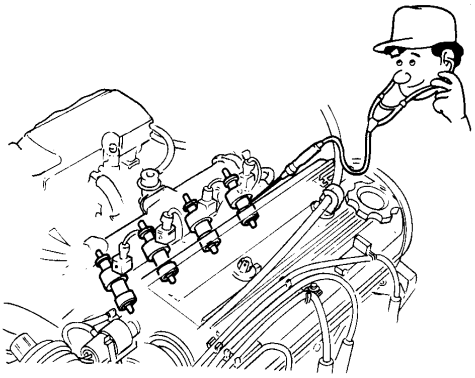

- If any injector fails to make the typical clicking sound, check the sound again after replacing the injector.
  - If clicking sound is still absent, check the following:
    - Whether there is any short-circuiting, wire breakage, or poor connection in the Yellow/Black wire between the resistor and the main relay.
    - Whether the resistor is open or corroded (page 11-77).
    - Whether there is any short-circuiting, wire breakage, or poor connection in the Red/Black wire between the resistor and the injector.
    - Whether there is any short-circuiting, wire breakage, or poor connection in the wire between the injector and the ECU.

  If all are OK, check the ECU (page 11-49).

If the engine cannot be started.

1. Remove the connector of the injector, and measure the resistance between the 2 terminals of the injector.

   Resistance should be: 1.5–2.5 Ω

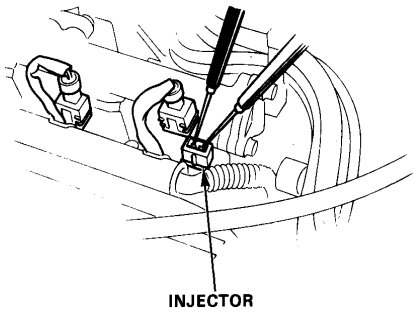

- If resistance is not as specified, replace the injector.
- If the resistance is as specified, check the fuel pressure (page 11-74).
  - If the fuel pressure is as specified, check the following:
    - Whether there is any short-circuiting, wire breakage, or poor connection in the Yellow/Black wire between the resistor and main relay.
    - Whether the resistor is open or corroded (page 11-77).
    - Whether there is any short-circuiting, wire breakage, or poor connection in the Red/Black wire between the resistor and the injector.
    - Whether there is any short-circuiting, wire breakage, or poor connection in the wire between the injector and the ECU.

  If all are OK, check the ECU (page 11-49).

Fuel Injectors

Replacement

WARNING **Do not smoke during the work. Keep open flames away from your work area.**

1. Disconnect the battery negative cable from the battery negative terminal.
2. Relieve fuel pressure (page 11-74).
3. Disconnect the connector of the injectors.
4. Disconnect the vacuum hose and fuel return hose from the pressure regulator.

NOTE: Place a rag or shop towel over the hose and tube before disconnecting them.

5. Remove the fuel line and pulsation damper.
6. Loosen the retainer nuts on the fuel pipe.
7. Disconnect the fuel pipe.
8. Remove the injectors from the intake manifold.

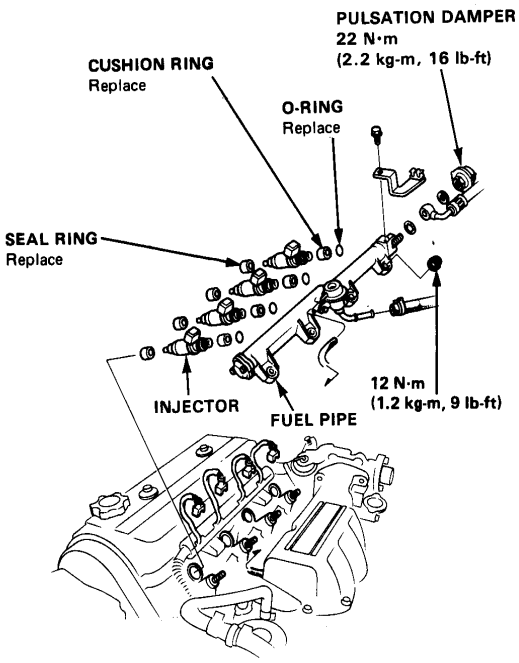

9. Slide new cushion rings onto the injector.
10. Coat new O-rings with clean engine oil and put them on the injectors.
11. Insert the injectors into the fuel pipe first.
12. Coat new seal rings with clean engine oil and press them into the intake manifold.
13. Install the injectors and fuel pipe assembly in the manifold.

CAUTION: To prevent damage to the O-ring, install the injectors in the fuel pipe first, then install them in the intake manifold.

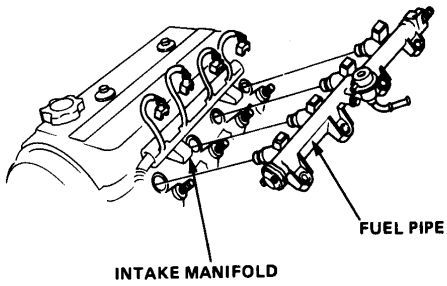

14. Align the center line on the connector with the mark on the fuel pipe.

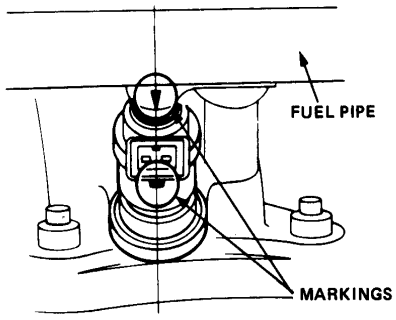

15. Install and tighten the retainer nuts.
16. Install the fuel line and pulsation damper.
17. Connect the vacuum hose and fuel return hose to the pressure regulator.
18. Install the connector on the injectors.
19. Turn the ignition switch ON but do not operate the starter. After the fuel pump runs for approximately two seconds, the fuel pressure in the fuel line rises. Repeat this two or three times, then check whether there is any fuel leakage.

Injector Resistor

Test

1. Disconnect the resistor connector.
2. Check for resistance between each of the resistor terminals (E, D, C and B) and the power terminal (A).

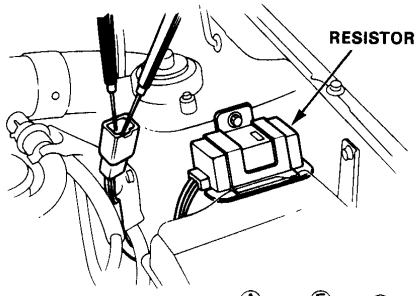

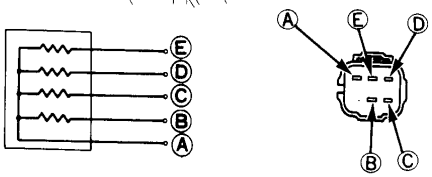

- Replace the resistor with a new one if any of the resistances are outside of the specification.

Pressure Regulator

Test

WARNING **Do not smoke during the test. Keep open flames away from your work area.**

1. Attach a pressure gauge to the service port of the fuel filter (page 11-74).

Pressure should be:
250—279kPa (2.55—2.85 kg/cm², 36—41 psi with the vacuum hose disconnected)

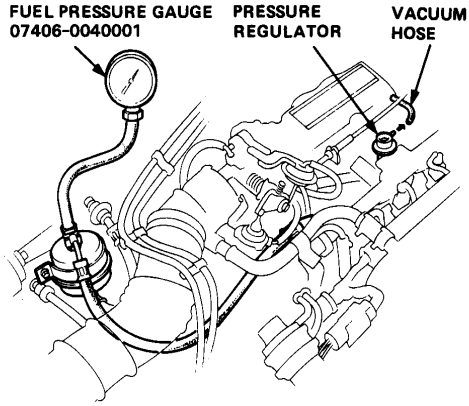

2. Check that the fuel pressure rose when the vacuum hose from the regulator was disconnected.
   - If the fuel pressure did not rise, check whether it rises when the return hose is lightly pinched.

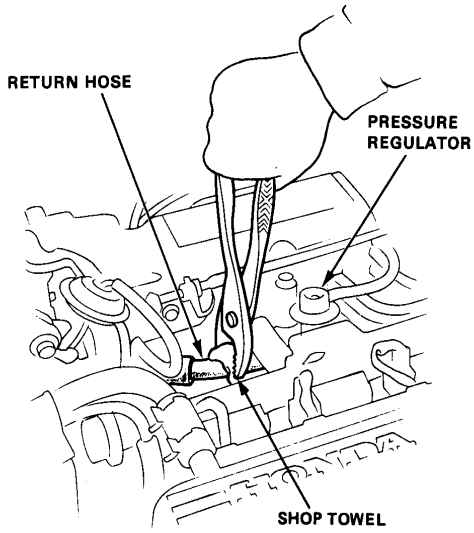

— If the pressure does not rise, replace the regulator and re-test.

Pressure Regulator

Replacement

WARNING **Do not smoke while working on fuel system. Keep open flame away from work area.**

1. Disconnect the negative terminal of the battery.
2. Place a shop towel under the pressure regulator, then relieve fuel pressure (page 11-74.)
3. Disconnect the vacuum hose and fuel return hose.
4. Remove the two 6 mm retainer bolts.

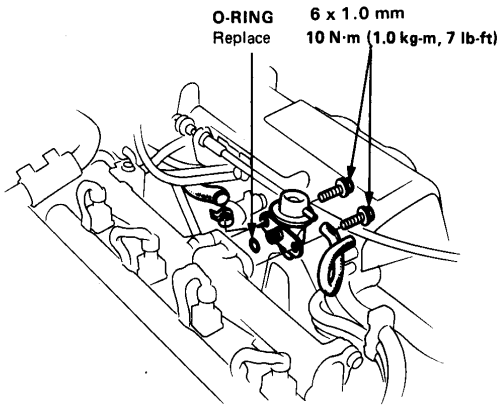

NOTE:
- Replace the O-ring.
- When assembling the regulator, apply clean engine oil to the O-ring and assemble it into its proper position, taking care not to damage the O-ring.

Fuel Filter

Replacement

WARNING **Do not smoke while working on fuel system. Keep open flame away from work area.**

The filter should be replaced: every 4 years or 60,000 miles (96.000 km), whichever or comes first, or whenever the fuel pressure drops below the specified value (250—279 kPa, 2.55—2.85 kg/cm^2, 36—41 psi with the vacuum hose disconnected) after making sure that the fuel pump and the pressure regulator are OK.

1. Disconnect the battery cable from the negative terminal.
2. Place a shop towel under and around the fuel filter.
3. Relieve fuel pressure (page 11-74).
4. Remove the two 12 mm banjo bolts from the filter.
5. Remove the fuel filter clamp and fuel filter.
6. When assembling, use new washers, as shown.

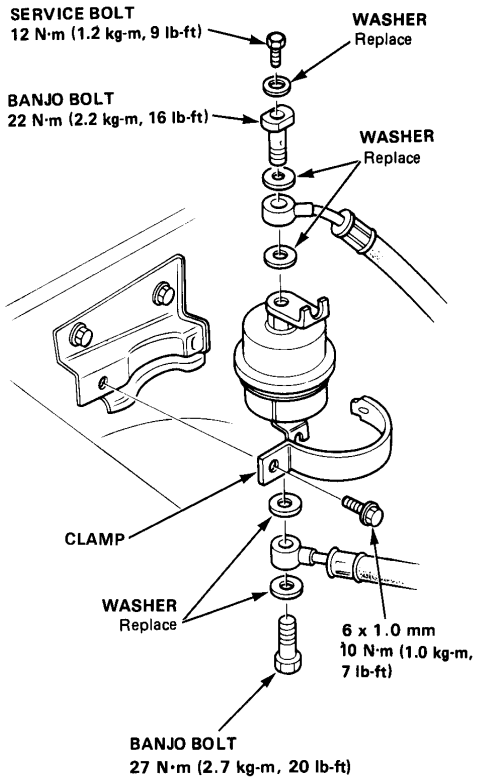

Fuel Pump

Test

WARNING Do not smoke during the test. Keep open flame away from your work area.

1. With the ignition switch OFF, disconnect the connector from the main relay behind the fuse box.
2. Connect the Yellow wire to the Black/Yellow wire with a jumper wire.

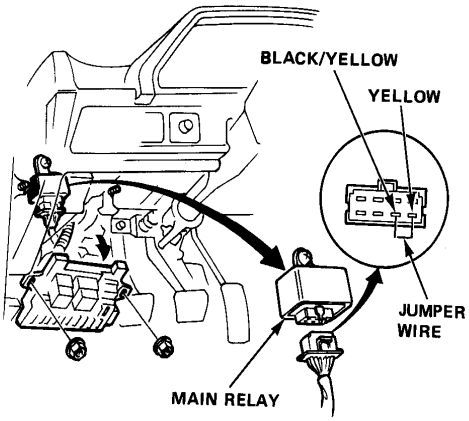

3. Relieve fuel pressure as described on page 11-74, then tighten the service bolt.
4. Disconnect the fuel return hose from the regulator.
5. Turn the ignition switch ON for 10 seconds and measure the amount of fuel flow.

Amount should be:
230 cc (7.8 oz) min. in 10 seconds at 12V

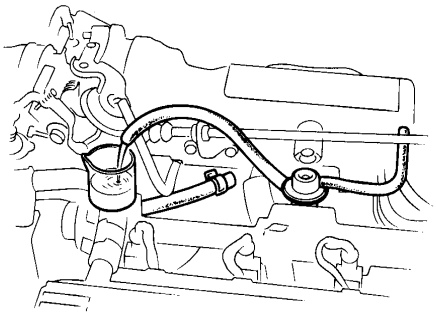

- If fuel flow is less than 230 cc (7.8 oz), or there is no fuel flow, check for:
  - Clogged fuel filter.
  - Clogged fuel line.
  - Pressure regulator failure (page 11-77).

If you suspect a problem with the fuel pump, check that the fuel pump actually runs; it should make noise for 2 seconds when the ignition switch is turned ON. If the pump does not make noise, check as follows:

1. Block front wheels. Jack up the rear of the car and support with jackstands.
2. Remove the fuel pump cover and disconnect the connector.

   CAUTION: Be sure to turn the ignition switch OFF before disconnecting the wires.

3. Check that battery voltage is available at the fuel pump wire connector when the ignition switch is turned ON. (Positive probe to the Yellow terminal, negative probe to the Black terminal)

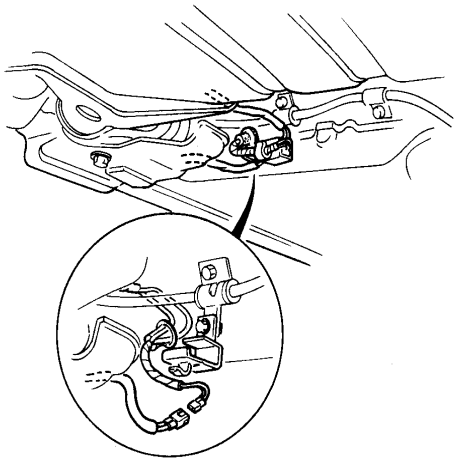

- If battery voltage is available, replace the fuel pump.
- If there is no voltage, check the main relay and wire harness (page 11-80).

Fuel Pump

Replacement

WARNING **Do not smoke while working on fuel system. Keep open flames away from your work area.**

1. Relieve fuel pressure (page 11-74).
2. Block front wheels. Jack up the rear of the car and support with jackstands.
3. Remove left rear wheel.
4. Remove the fuel pump cover.
5. Remove the three bolts, then remove the fuel pump with its mount.
6. Disconnect the fuel lines and 2-P connector.

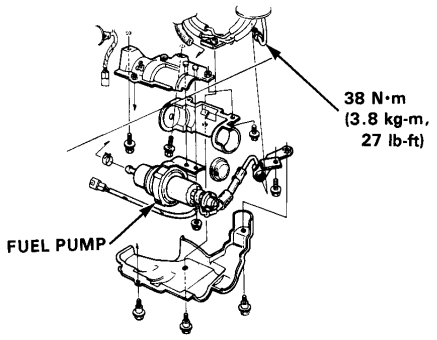

7. Remove the clamp and then remove the fuel pump.
8. Remove the fuel line and the pulsation dumper from the pump.

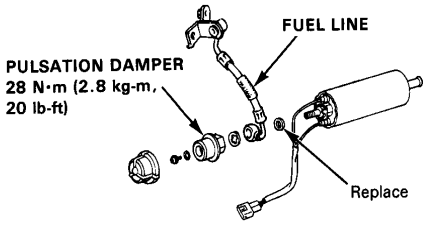

CAUTION: Do not disassemble the pump.

9. Install the new fuel pump on its mount.
10. Carefully clean the sealing surface of the flared fuel line, then install it on the fuel pump and tighten the flare nut. Reinstall the fuel hose and pulsation damper on the front of the fuel pump.
11. Reconnect the 2-P connector and reinstall the fuel pump.
12. Check the fuel pump connections for leaks.

CAUTION: Clean the flared joints of high pressure hoses throughly before reconnecting them.

Main Relay

Test

1. Remove the main relay, near the under-dash fuse box.
2. Attach the battery positive terminal to the No. 4 terminal and the battery negative terminal to the No. 8 terminal of the main relay. Then check for continuity between the No. 5 terminal and No. 7 terminal of the main relay.

   - If there is continuity, go on to step 3.
   - If there is no continuity, replace the relay and retest.

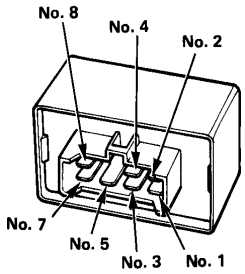

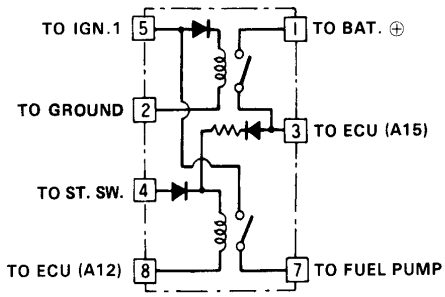

3. Attach the battery positive terminal to the No. 5 terminal and the battery negative terminal to the No. 2 terminal of the main relay. Then check that there is continuity between the No. 1 terminal and No. 3 terminal of the main relay.

   - If there is continuity, go on to step 4.
   - If there is no continuity, replace the relay and retest.
4. Attach the battery positive terminal to the No. 3 terminal and battery negative terminal to the No. 8 terminal of the main relay. Then check that there is continuity between the No. 5 terminal and No. 7 terminal of the main relay.

   - If there is continuity, the relay is OK; if the fuel pump still does not work, go to Harness Test in the next column.
   - If there is no continuity, replace the relay and retest.

Harness Test

1. Keep the ignition switch in the OFF position.
2. Disconnect the main relay connector.
3. Check for continuity between the Black wire ② in the connector and body ground.
4. Attach positive probe of voltmeter to the Yellow/White wire ① and negative probe to the Black wire ②.

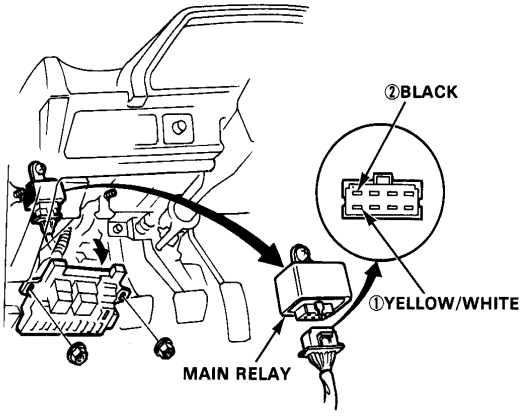

Battery voltage should be available.
- If there is no voltage, check the wiring between the battery and the main relay as well as fuse (15A).

5. Attach positive probe of voltmeter to the Black/Yellow wire ⑤ and negative probe to the Black wire ②.

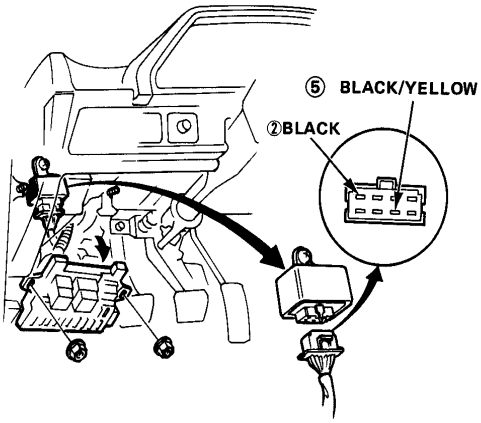

6. Turn the ignition switch ON.

Battery voltage should be available.
- If there is no voltage, check the wiring between the ignition switch and the main relay as well as No. 4 fuse (10 A).

7. Attach positive probe of voltmeter to the Blue/White wire ④ and negative probe to the Black wire ②.

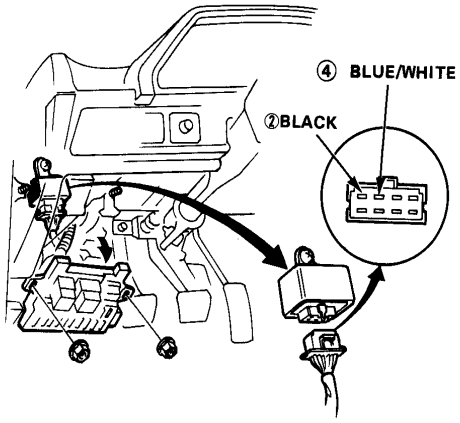

8. Turn the ignition switch to START position.
   The tester should indicate battery voltage.
   - If there is no voltage, check the wiring between the ignition switch and main relay as well as No.1 fuse (10A)

9. Connect a jumper wire between the Black/Yellow wire ⑤ and Yellow wire ⑦ in the connector.

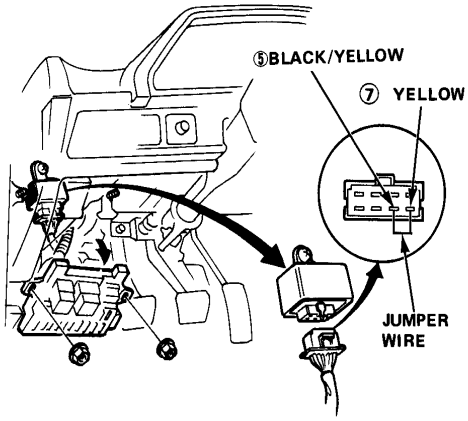

10. Turn the ignition switch ON.
    The fuel pump should work.
    - If the fuel pump does not work, check the wiring between the main relay and fuel pump and the wiring from the fuel pump to the ground (Black wire).

Fuel Tank

Replacement

WARNING Do not smoke while wtrking on fuel system. Keep open flame away from work area.

1. Block front wheels, Jack up the rear of the car and support with jackstands.
2. Remove the drain bolt and drain the fuel into an approved container.
3. Disconnect the sending unit wires.
4. Disconnect the hoses.

   CAUTION: When disconnecting the hoses, slide back the clamps, then twist hoses as you pull, to avoid damaging them.

5. Place a jack, or other support, under the tank.
6. Remove the strap nuts and let the straps fall free.
7. Remove the fuel tank.

NOTE; The tank may stick on the undercoat applied to its to its mount. To remove carefully pry it off the mount.

8. Install a new washer on the drain bolt, then install parts in the reverse order of removal.

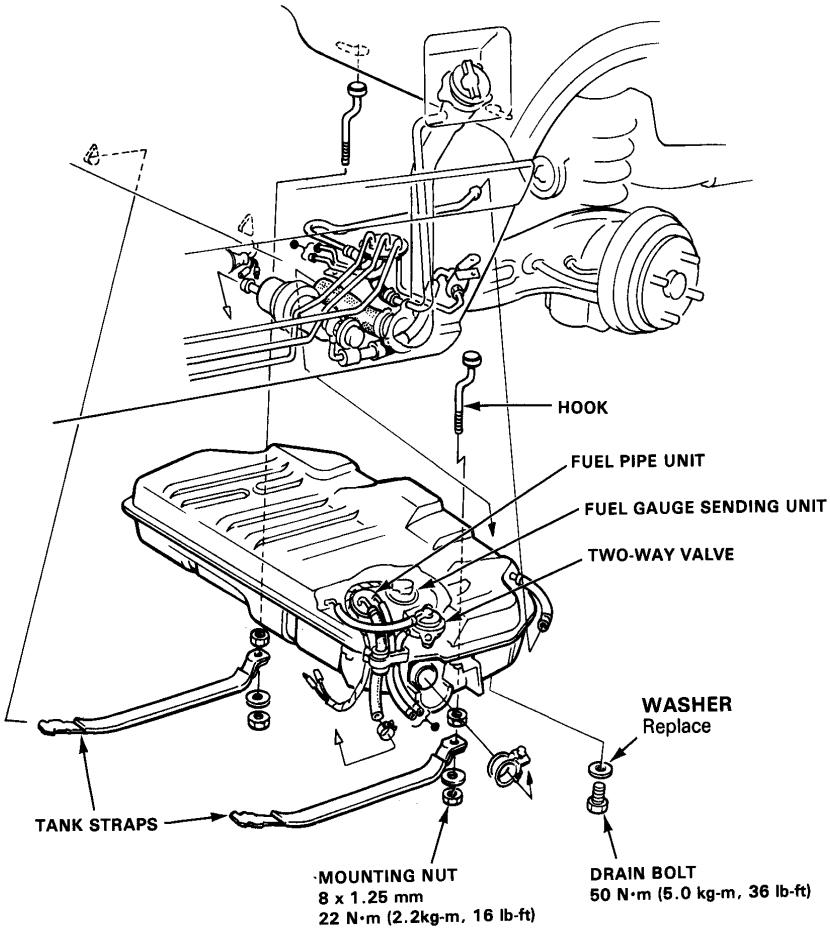

Fuel Gauge

Test

1. Disconnect the fuel tank wire harness connectors. Connect the Yellow/White wire to the Black wire.

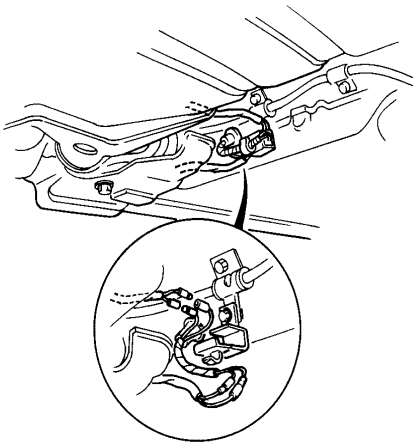

2. Turn the ignition switch ON.
   Check that the pointer of the fuel gauge starts moving toward F.

   CAUTION: Turn the ignition switch OFF within 5 seconds, before the pointer reaches "F" mark on the gauge dial. Failure to turn the ignition switch OFF before the pointer reaches the "F" mark may cause damage to the fuel gauge.

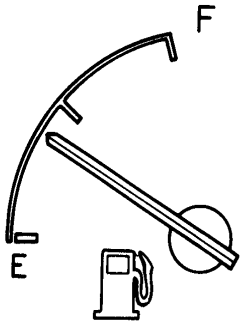

- If the pointer of the fuel gauge does not swing at all, check the fuse, wire harness and connector. Replace the fuel gauge if they are normal.
- Inspect the fuel gauge sending unit if the fuel gauge is OK.

Fuel Gauge Sending Unit

Test

1. Remove the fuel tank (page 11-82).
2. Remove the fuel gauge sending unit.

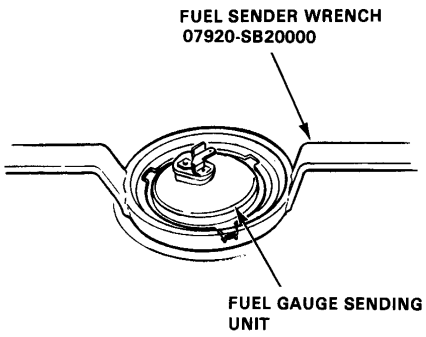

3. Measure the resistance between the terminals at E (EMPTY), 1/2 (HALF FULL) and F (FULL) by moving the float.

Float Position	E (3.7 ℓ)	1/2 (22.3 ℓ)	F (42.5 ℓ)
Resistance (Ω)	105–110	25.5–39.5	2–5

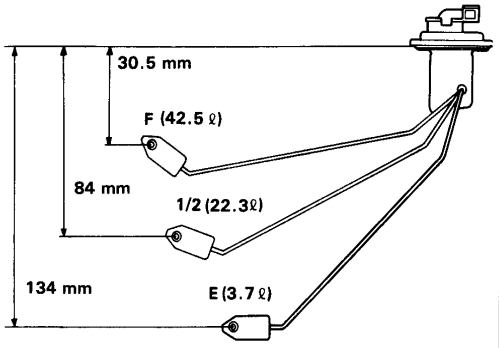

- If unable to obtain the above readings, replace the fuel unit with a new one.

Fuel Pipe Unit

Replacement

1. Remove the fuel tank (page 11-82).
2. Remove the fuel pipe unit.

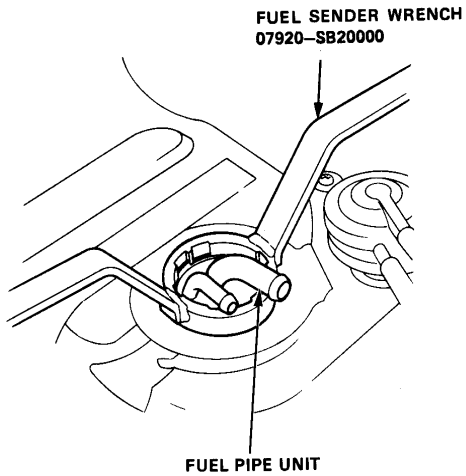

3. Clean the filter at the end of the pipe unit.
4. Apply a thin layer of white grease to the new O-ring before installation.

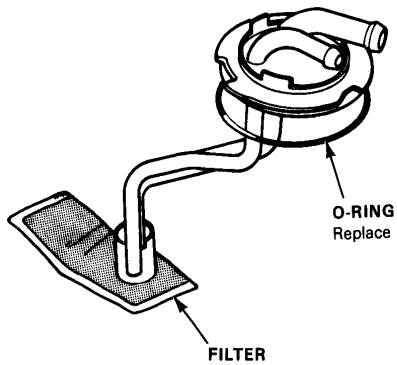

Throttle Cable

Inspection/ Adjustment

1. Warm up the engine to normal operating temperature (cooling fan comes on).
2. Check that the throttle cable operates smoothly with no binding or sticking. Repair as necessary.
3. Check cable free play at the throttle linkage. Cable deflection should be 10–12 mm (0.39–0.47 in.).

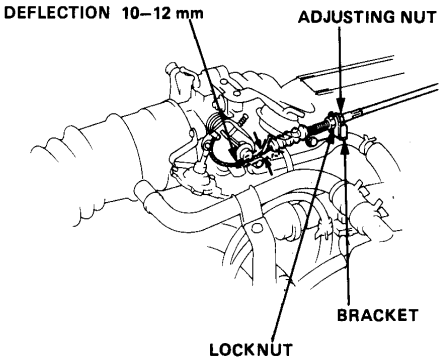

4. If deflection is not within specs, loosen the locknut and turn the adjusting nut until the deflection is as specified.
5. With the cable properly adjusted, check the throttle valve to be sure it opens fully when you push the accelerator pedal to the floor. Also check the throttle valve to be sure it returns to the idle position whenever you release the accelerator.

Replacement

1. Loosen the locknut and remove the throttle cable from the bracket.
2. Remove the cable from the throttle linkage.

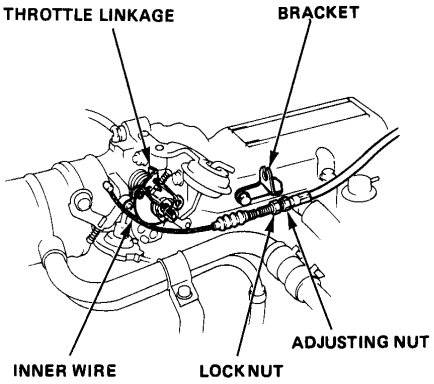

3. Hold the cable sheath, removing all slack from the cable.
4. Turn the adjusting nut until it is 3 mm (0.12 in.) away from the cable bracket.
5. Tighten the locknut.The cable deflection should now be 10—12 mm (0.39—0.47 in.). If not, see Inspection/Adjustment.

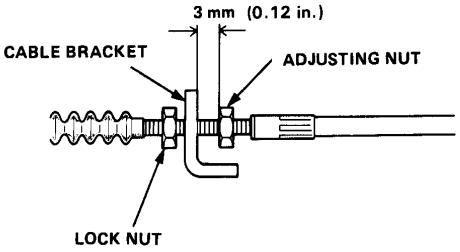

Throttle Body

Inspection

CAUTION: Do not adjust the throttle stop screw since it is preset at the factory.

1. Start the engine and warm up to normal operating temperature (cooling fan comes on).
2. Disconnect the vacuum hose (to the casister) from the top of the throttle body; connect a vacuum gauge to the throttle body.

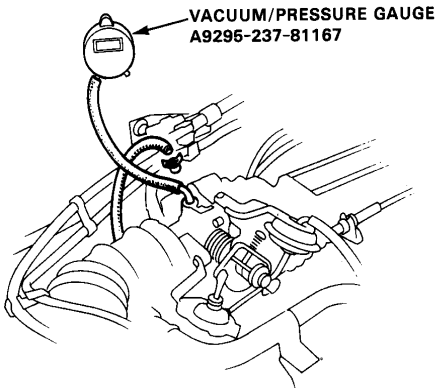

3. Allow the engine to idle and check that the gauge indicates no vacuum.
4. Then, check that vacuum is indicated on the gauge when the throttle is opened slighty from idle.
   - If the gauge indicates no vacuum with the throttle slightly open, check the canister port.
     If the canister port is clogged, clean it with carburetor cleaner.
5. Stop the engine and check that the throttle cable operates smoothly without binding or sticking.
   - If there are any abnormalities in the above steps, check for:

— Excessive wear or play in the throttle valve shaft.
— Sticky or binding throttle lever at full close position.
— Clearance between throttle stop screw and throttle lever at full close position.

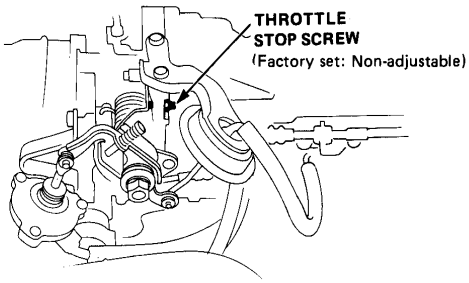

Replace the throttle body if there is excessive play in the throttle valve shaft or if the shaft is binding or sticking.

Disassembly

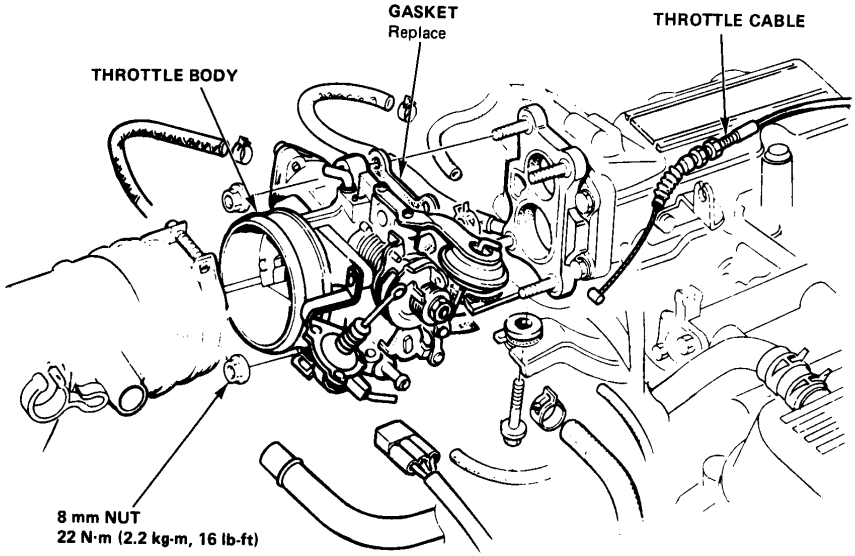

CAUTION: The throttle stop screw is non-adjustable.

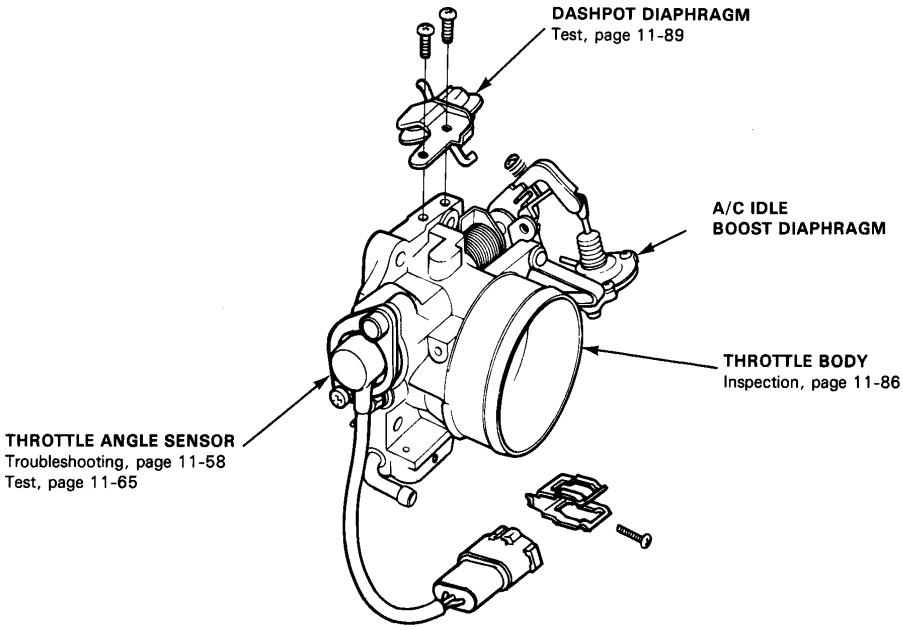

Fast Idle Valve

Inspection

NOTE:
- The fast idle valve is factory adjusted, it should not be disassembled.
- Check the PCV (engine breather) circuit hoses for proper connection and condition.
- Check that the throttle valves are fully closed.

Idle speed too high after engine is warmed up.

1. Confirm that the engine is adequately warmed up.
2. Check whether the idling control function is normal (page 11-62).
3. Remove the cover of the fast idle valve.
4. Check that the valve is completely closed. If not, air is being sucked from the valve seat area. It can be detected by putting your finger on the valve seat area.

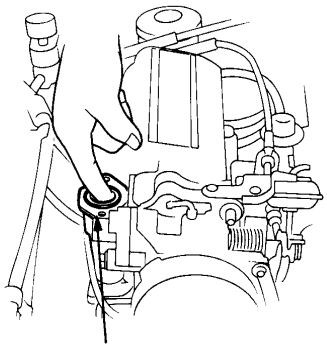

FAST IDLE VALVE ASSY

- If any sucking is felt, the valve is leaking. Replace the fast idle valve and adjust idle speed (page 11-78).

Idle speed is too low after engine is warmed up.

1. Remove the idle adjusting screw.

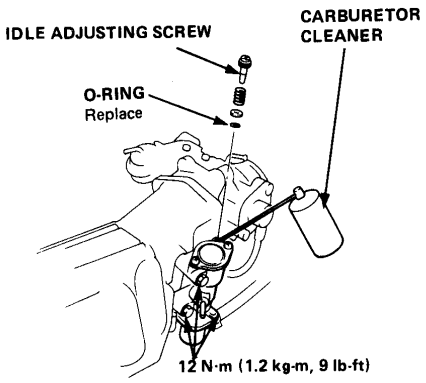

2. Wash the idle adjusting screw and the air bypass channel with carburetor cleaner.
3. Readjust idle speed after cleaning.

Fast idle speed is low when engine is cold (coolant temperature below 30°C (86°F). Fast idle valve may be stuck closed.)

Fast idle speed should be: 1,250–2,250 rpm

1. Remove the fast idle valve assy from the throttle body.
2. Apply cold water and cool down the wax part of the fast idle valve to 5–30°C (41–86°F).

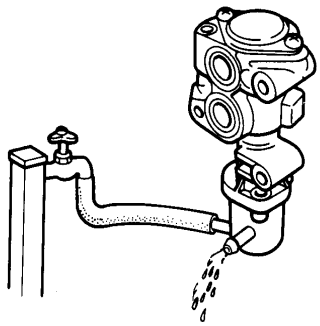

3. Blow through port A of the fast idle valve, and check that a fairly large amount of air flows without resistance.

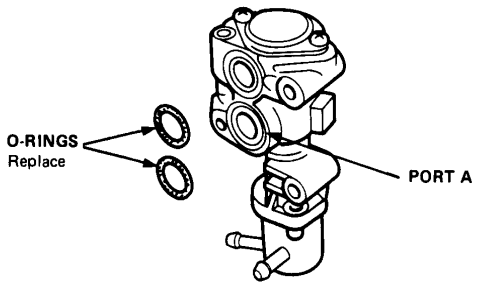

- If air does not flow or the resistance is large, replace the fast idle valve and adjust idle speed.

Dashpot System

Test

1. With the engine shut off, slowly open the throttle arm until the dashpot rod is raised up as far as it will go.

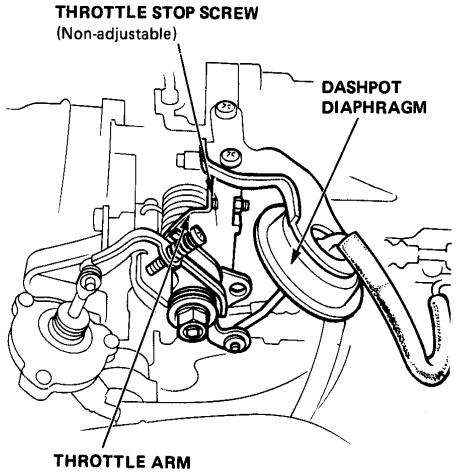

2. Release the throttle arm and measure the time until the throttle arm contacts the stop screw.

   Time should be: less than 2 seconds

   - If the time is over 2.0 seconds, replace the dashpot check valve and re-test.
   - If the rod does not operate, check for bound linkage, or for clogged check valve or vacuum line.
     - If they are OK,replace the dashpot diaphragm with a new one.

Clutch

Clutch

Illustrated Index

NOTE: Whenever the transmission is removed the release bearing sliding surface should be cleaned and greased.

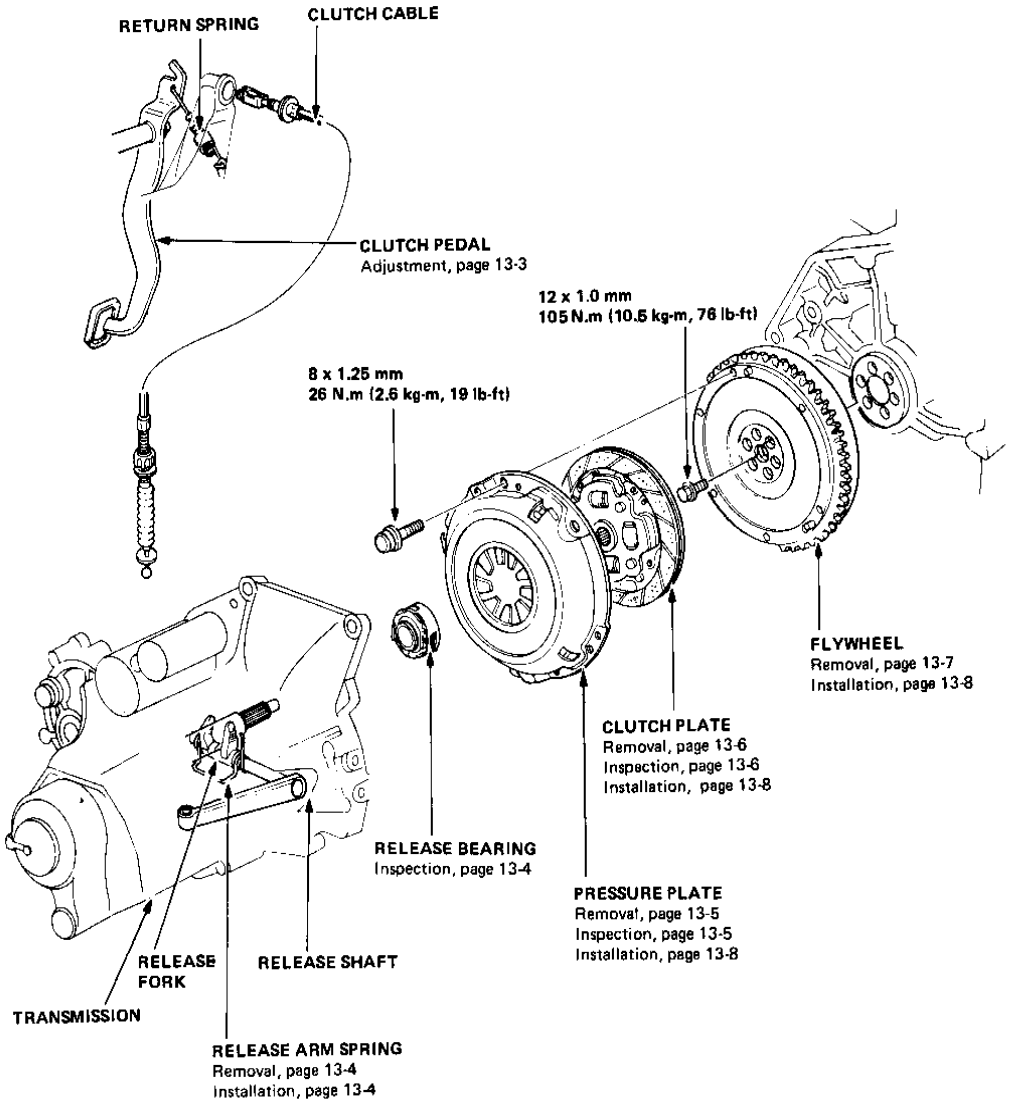

Adjustment

1. Measure the clutch pedal disengagement height.
2. Measure the clutch pedal free play.
3. Adjust the clutch free play by turning the adjusting nut.
4. Make sure that there is 4.0—5.0 mm (5/32—13/64 in) free play at the tip of release arm after the adjustment.

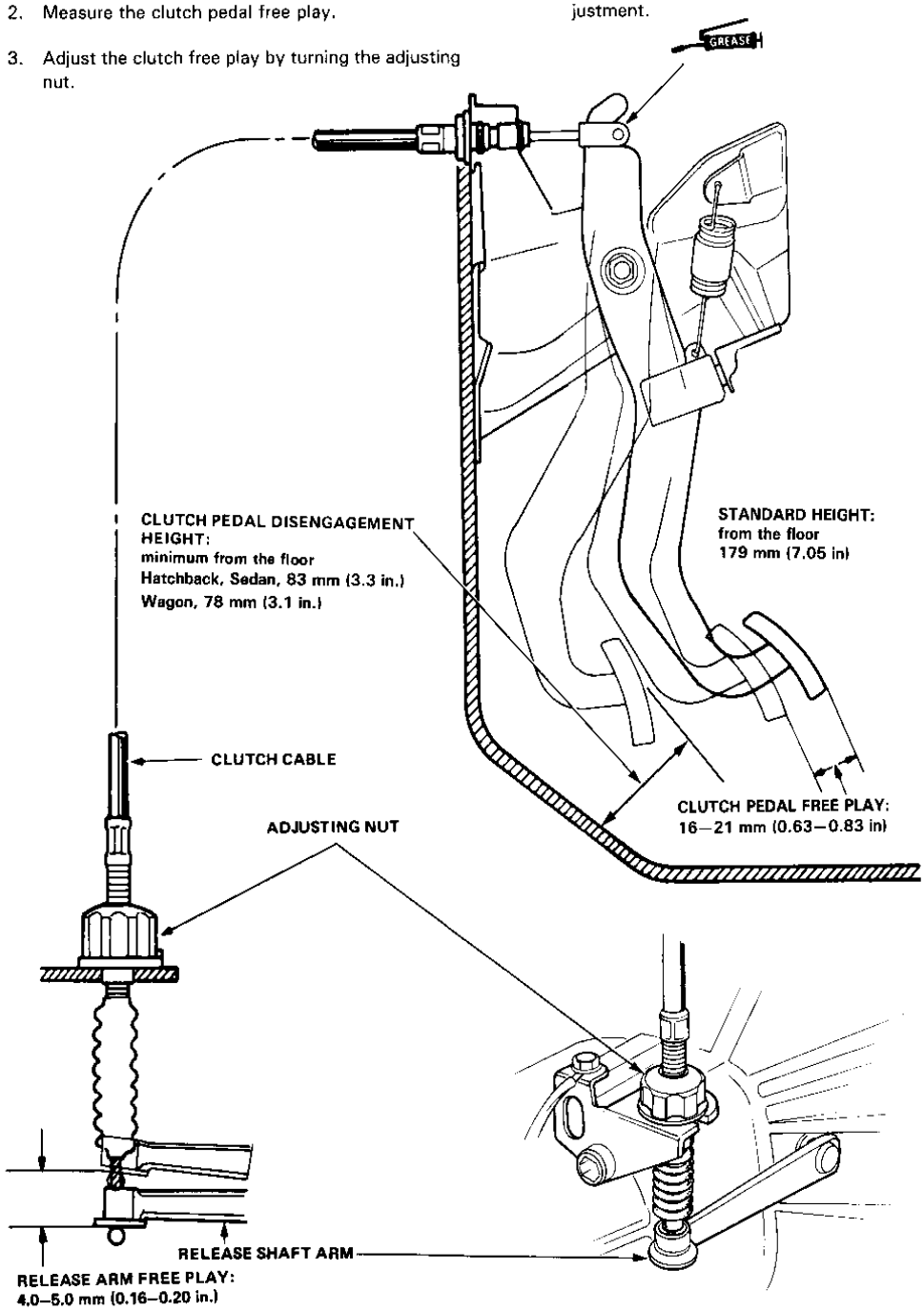

Release Bearing

Removal/Inspection

1. Remove 8 mm special bolt.

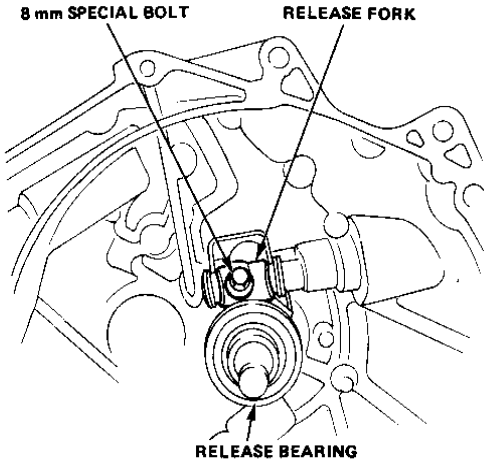

2. Remove the clutch release shaft and then remove the release bearing and release fork.
3. Separate the release bearing from the release fork.
4. Check release bearing for excessive play by spinning it by hand.

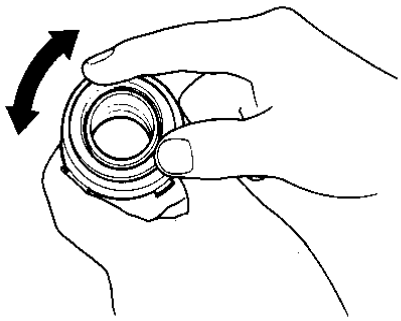

5. Replace bearing with new one if there is excessive play.

   CAUTION: Bearing is packed with grease. Do not wash in solvent.

Installation

1. Apply grease to the grooves inside of the bearing and to the bearing contact surface with the release fork.

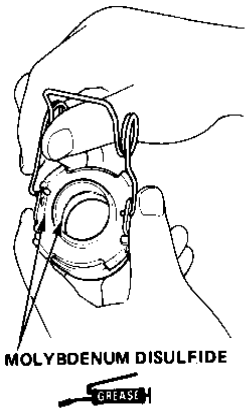

2. Install the release arm spring into the release fork tabs as shown.
3. Install the release fork onto the release bearing with its arms aligned with the tabs.

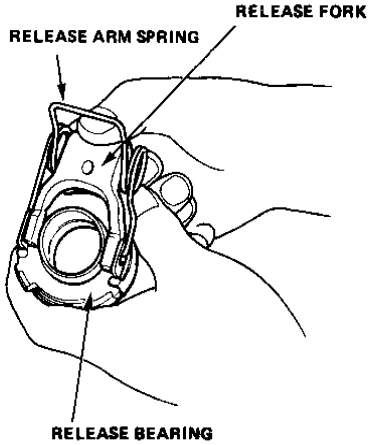

4. Slip the release bearing over the mainshaft, while holding the release arm spring as shown, then install the release shaft.

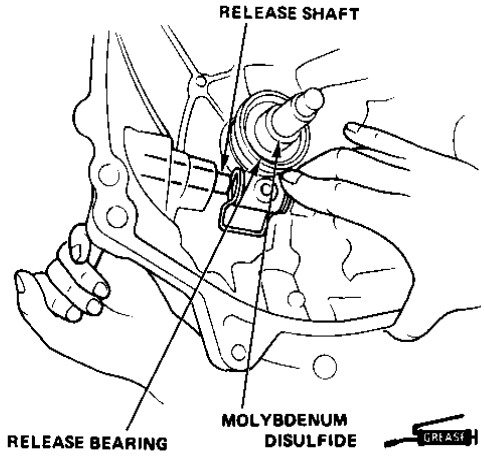

5. Align the hole on the release shaft with the one on the release fork then install the 8 mm special bolt and new spring washer.

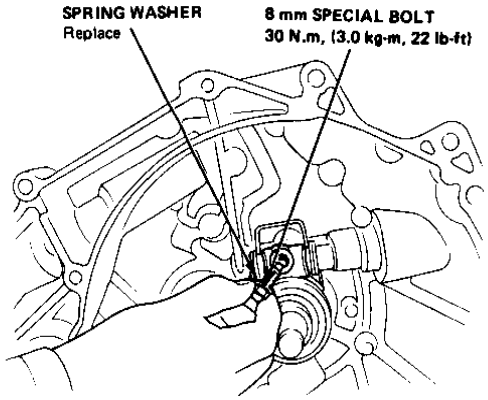

7. After installation, pull release arm up, then let it down, to be sure fork fits against bearing holder properly, and holder slides freely on sleeve.

Pressure Plate

Removal/Inspection

1. Inspect the fingers of diaphragm spring for wear at release bearing contact area.
2. Check diaphragm spring leaves for height using Clutch Disc Alignment Tool and feeler gauge.

Diaphragn spring height:
Standard: 0.6 mm (0.024 in) Max.
Service limit: 1.0 mm (0.039 in)

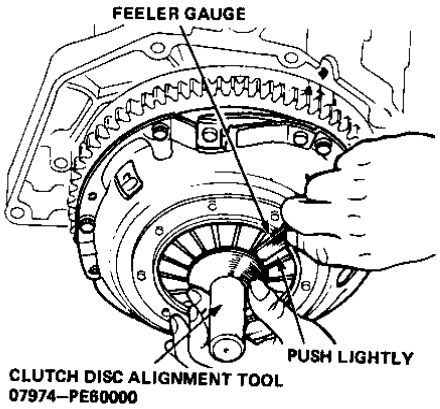

3. Install Ring Gear Holder.

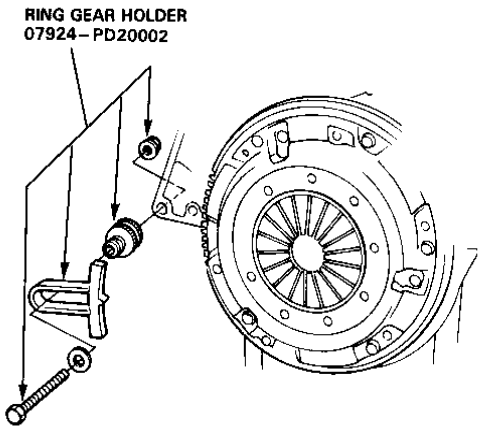

(cont'd)

Pressure Plate

Removal/Inspection(cont'd)

4. To prevent warping, unscrew pressure plate mounting bolts two turns at a time in a criss-cross pattern using a 10 mm T-wrench, then remove pressure plate and clutch plate.

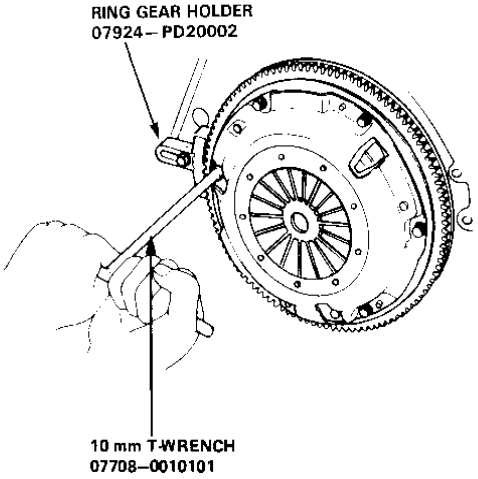

5. Inspect pressure plate surface for wear, cracks, or burning.

6. Inspect for warpage using a straight edge and feeler gauge.

Standard: 0.03 mm (0.001 in.) max.
Service Limit: 0.15 mm (0.006 in.)

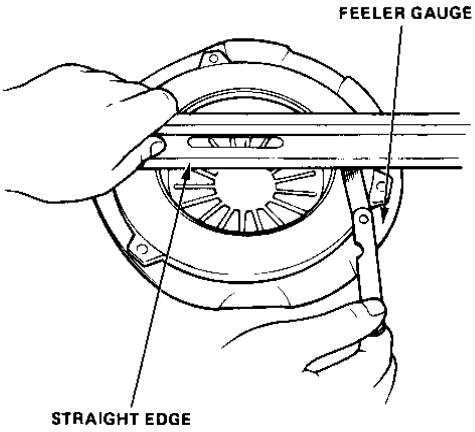

Clutch Plate

Removal/Inspection

1. Remove clutch plate.

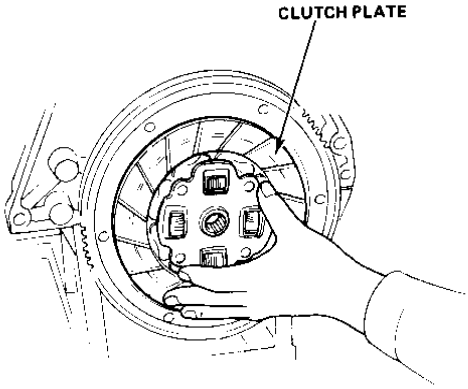

2. Inspect lining for signs of slipping or oil. Replace if burned black or oil soaked.

3. Measure clutch plate thickness.

Clutch Plate Thickness:
Standard: 8.1—8.8 mm (0.32—0.35 in.)
Service Limit: 5.7 mm (0.22 in.)

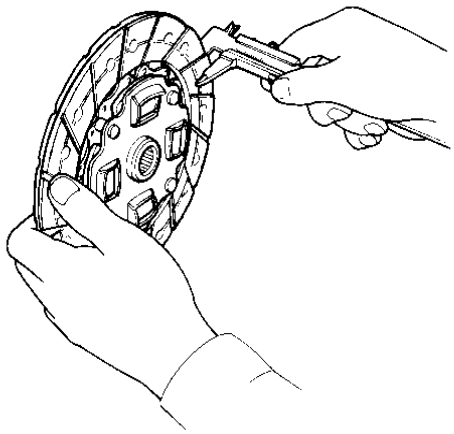

Flywheel

Inspection/Removal

4. Check for loose rubber torsion dampers. Replace clutch plate if any are loose.
5. Measure depth from lining surface to rivets, on both sides.

Rivet Depth:
Standard (New): 1.3 mm (0.051 in.) min.
Service Limit: 0.2 mm (0.008 in.)

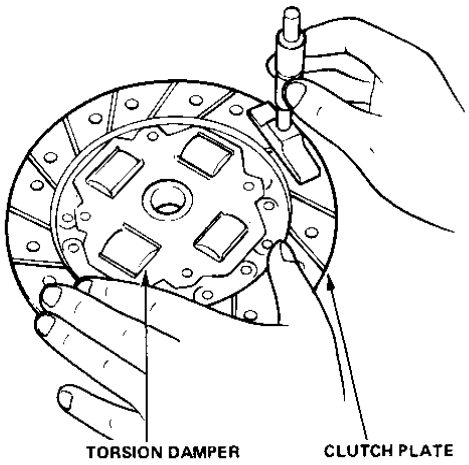

6. Measure the clutch plate runout with the mainshaft and a dial indicator.

Clutch plate runout:
Standard: 0.8 mm (0.031 in.) max.
Service Limit: 1.0 mm (0.039 in.)

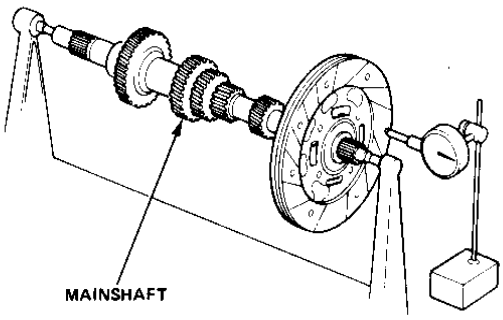

1. Inspect ring gear teeth for wear or damage.
2. Inspect clutch plate mating surface on flywheel for wear, cracks or burning.
3. Measure flywheel runout using dial indicator through at least two full turns. Push against flywheel each time you turn it to take up crankshaft thrust washer clearance.

   NOTE: Runout can be measured with engine installed.

Flywheel Runout:
Standard (New): 0.05 mm (0.002 in.) max.
Service Limit: 0.15 mm (0.006 in.)

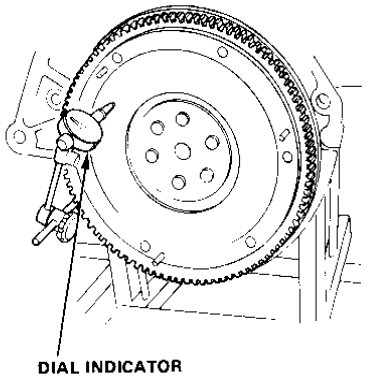

4. Remove six flywheel mounting bolts and flywheel.

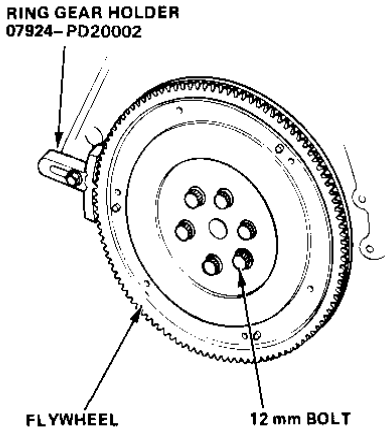

Pressure Plate/Clutch

Installation

1. Align hole in flywheel with crankshaft dowel pin and assemble. Install bolts only finger right.

2. Install Ring Gear Holder, then torque flywheel bolts in a criss-cross pattern.

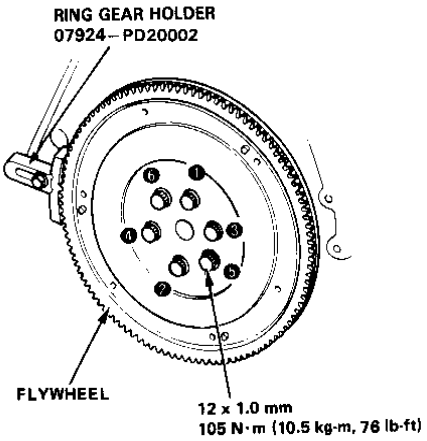

3. Install friction disc and pressure plate by aligning flywheel dowels with dowel holes in clutch cover.

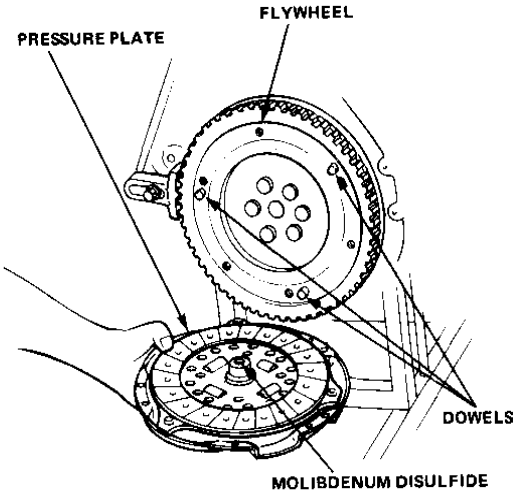

4. Install attaching bolts but do not tighten the bolts at this time.

5. Insert Clutch Alignment Tool in spline hole in friction disc.

   NOTE: Place the special tool as shown.

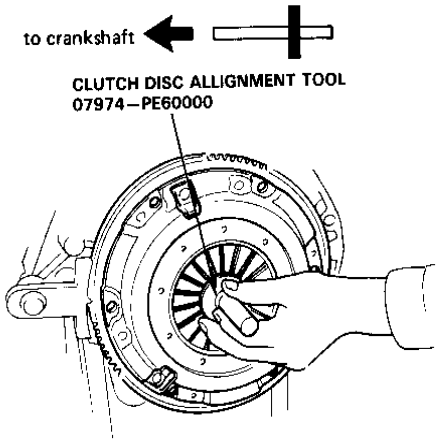

6. Torque the bolts in a criss-cross pattern. Tighten them two turns at a time to prevent warping the diaphragm spring.

TIGHTENING SEQUENCE:

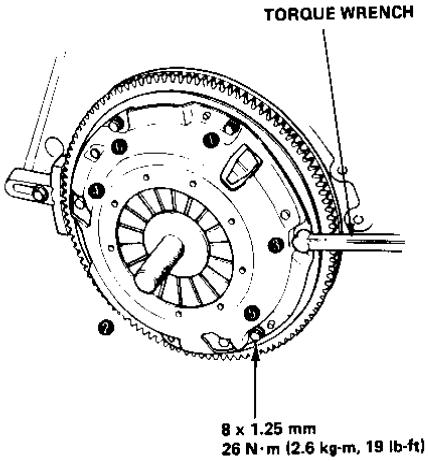

7. Remove Alignment Tool and Ring Gear Holder.

5-Speed Transmission (2WD)

Maintenance

Oil Change

Change oil every 48,000 km (30,000 miles).
Use only SE or SF grade oil.
Use the proper viscosity oil for the climate.

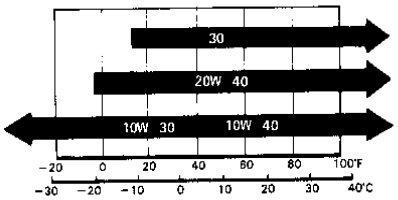

Capacity:
2.3ℓ (2.4 US qt) after draining
2.5ℓ (2.6 US qt) after overhaul

Oil Level Check

1. Check with oil at operating temperature, engine OFF, and car on level ground.
2. Remove oil filler bolt and check level with finger.
3. Oil level must be to fill hole. If it is below hole, add oil until it runs out, then reinstall bolt.

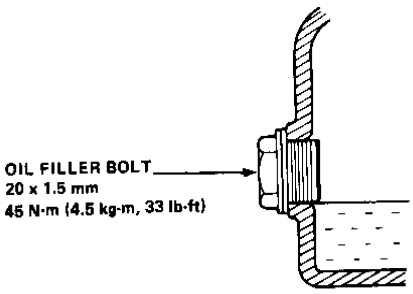

Transmission Assy

Removal

1. Disconnect the ground cable at battery and at transmission.
2. Release the steering lock and put gear shift lever in neutral.
3. Disconnect the engine compartment wiring:
   - Battery positive cable from starter.
   - Black/white wire from starter solenoid.
   - Green/black and yellow wires from back-up light switch.
   - Transmission ground cable.
4. Remove the speedometer cable by removing clip. Do not disassemble speedometer gear holder.
5. Disconnect the clutch cable at release arm.
6. Remove the transmission side starter mounting bolts and top transmission bolts.
7. Loosen the front wheel lug nuts.
8. Apply the parking brake, block the rear wheels, then raise the front end on jack stands and remove the front wheels.
9. Attach a hoist chain to the bolt shown, then raise the engine a slight amount to unload the mounts.

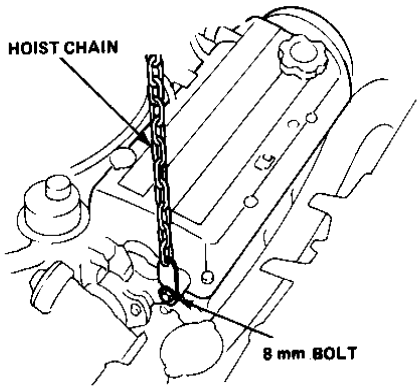

10. Drain the transmission oil. Reinstall the drain plug and washer.
11. Disconnect the right and left lower arm ball joints and tie-rod end ball joints using Ball Joint Remover Tool.
    CAUTION: Make sure the floor jack is positioned securely under the lower control arm, at the ball joint. Otherwise, torsion bar tension on the lower control arm may cause the arm to "jump" suddenly away from the steering knuckle as the ball joint is being removed.

12. Remove the engine splash shield and the right side wheel well splash shield (See Section. 5)

13. Disconnect the header pipe at the exhaust manifold (See Section. 5).

14. Turn the right steering knuckle outward as far as it will go. With screwdriver against inboard CV joint, pry right axle out of transmission housing approximately 1/2 inch (to force its spring clip out of groove inside differential gear splines), then pull it out the rest of the way. Repeat on opposite side, or, with driver's side connected, pry left axle out of transmission during Step. 20.

15. Disconnect the shift lever torque rod from clutch housing.

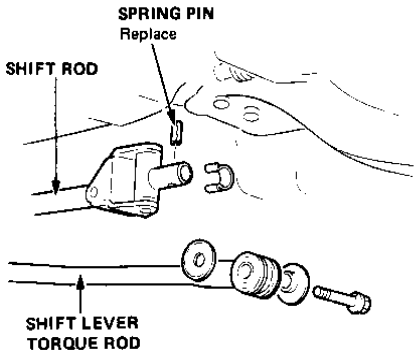

16. Slide pin retainer back, drive out spring pin using a pin punch, then disconnect shift rod.

17. Place a jack under the transmission and raise transmission just enough to take weight off mounts.

18. Remove the bolts from the front transmission mount.

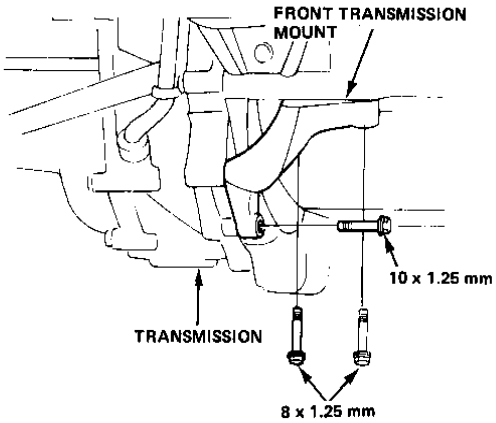

19. Remove the transmission housing bolts from the engine torque bracket.

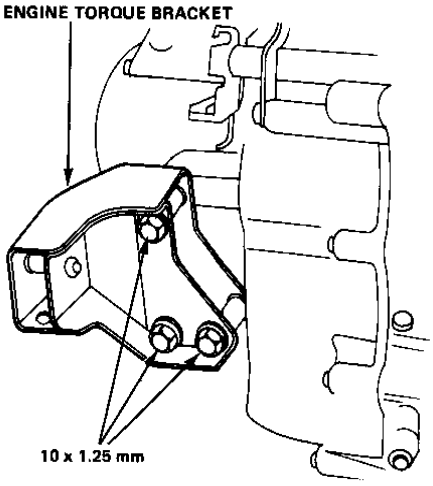

20. Remove the clutch housing bolts from the rear transmission mount.

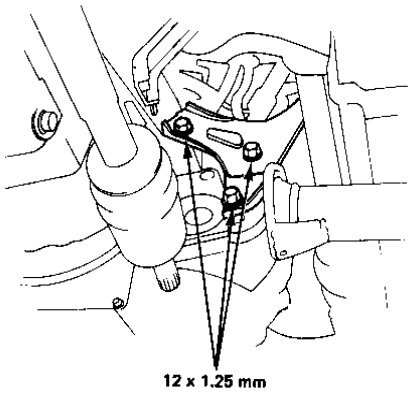

21. Remove the two transmission bolts.

22. Pull the transmission away from engine until mainshaft clears clutch pressure plate, then lower on transmission jack.

5-Speed Transmission

Index

Clean all parts thoroughly in solvent and dry with compressed air.

Lubricate all parts with oil before reassembly.

NOTE: This transmission uses no gaskets between the major housings; use Honda P/N 08740-99986 sealant.
Assemble the housings within 20 minutes after applying the sealant and allow it to cure at least 30 minutes after assembly before filling the transmission with oil.

Torque Value	Bolt Size
A-12 N·m (1.2 kg-m, 9 lb-ft)	1-6 x 1.0 mm
B-27 N·m (2.7 kg-m, 20 lb-ft)	2-8 x 1.25 mm

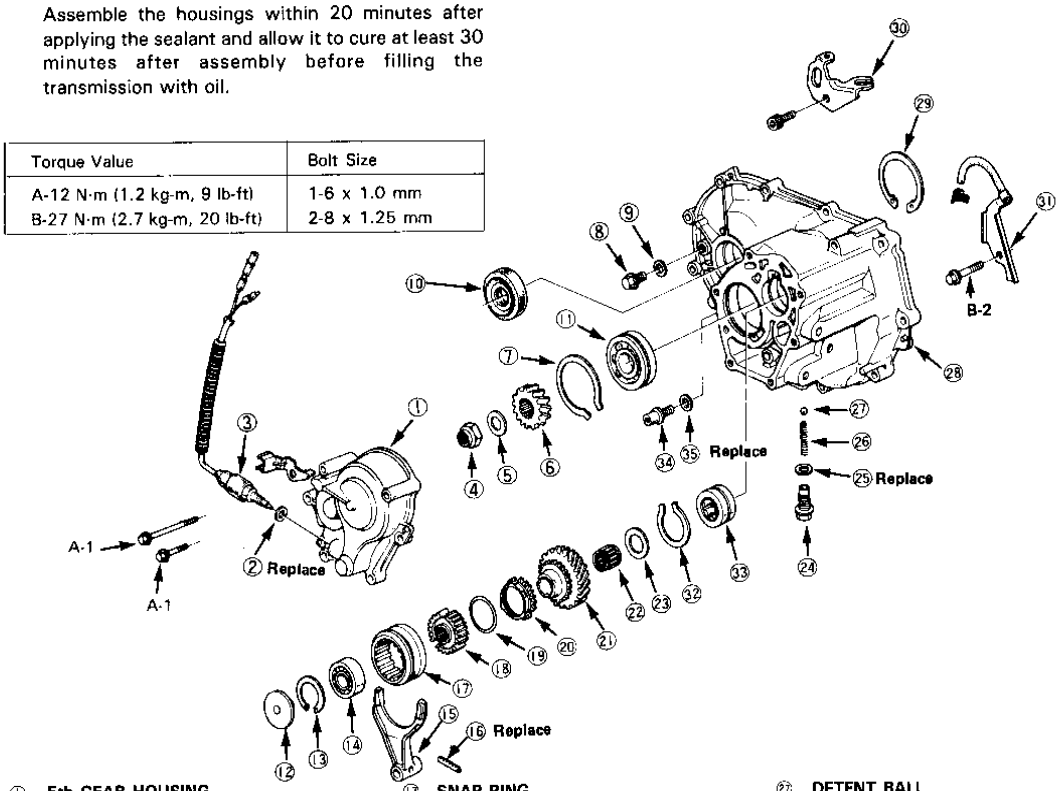

① **5th GEAR HOUSING**
Removal, page 15-7
② **14 mm WASHER**
③ **BACK-UP LIGHT SWITCH**
Inspection, page 15-36
25 N·m (2.5 kg-m, 18 lb-ft)
④ **COUNTERSHAFT LOCKNUT**
110 N·m (11.0 kg-m, 80 lb-ft)
⑤ **SPRING WASHER**
⑥ **COUNTERSHAFT 5th GEAR**
⑦ **65 mm SNAP RING**
⑧ **OIL FILLER BOLT**
45 N·m (4.5 kg-m, 33 lb-ft)
⑨ **SEALING WASHER**
⑩ **SEAL**
Removal, page 15-22
Installation, page 15-34
⑪ **COUNTERSHAFT BALL BEARING**
⑫ **OIL GUIDE PLATE**
⑬ **SNAP RING**
Removal, page 15-8
Installation, page 15-8
⑭ **MAINSHAFT BALL BEARING**
⑮ **5th GEAR SHIFT FORK**
⑯ **SPRING PIN**
Disassembly, page 15-9
Assembly, page 15-33
⑰ **5th GEAR SYNCHRO SLEEVE**
⑱ **5th GEAR SYNCHRO HUB**
⑲ **SYNCHRO SPRING**
⑳ **5th GEAR SYNCHRO RING**
㉑ **5th GEAR**
㉒ **NEEDLE BEARING**
㉓ **THRUST WASHER**
㉔ **DETENT BALL RETAINER SCREW**
22 N·m (2.2 kg-m, 16 lb-ft)
㉕ **SEALING WASHER**
㉖ **DETENT SPRING**
㉗ **DETENT BALL**
㉘ **TRANSMISSION HOUSING**
㉙ **72 mm SNAP RING**
㉚ **CLUTCH CABLE BRACKET**
㉛ **BREATHER TUBE ASSEMBLY**
㉜ **45 mm SNAP RING**
㉝ **NEEDLE BEARING**
㉞ **OIL DRAIN PLUG**
40 N·m(4.0 kg-m, 29 lb-ft)
㉟ **SEALING WASHER**

NOTE: Always clean the magnet (48) whenever the transmission housing is disassembled.

Torque Value	Bolt Size
A-12 N·m (1.2 kg-m, 9 lb-ft) B-14 N·m (1.4 kg-m, 10 lb-ft) C-24 N·m (2.4 kg-m, 17 lb-ft)	1-6 x 1.0 mm 2-8 x 1.25 mm

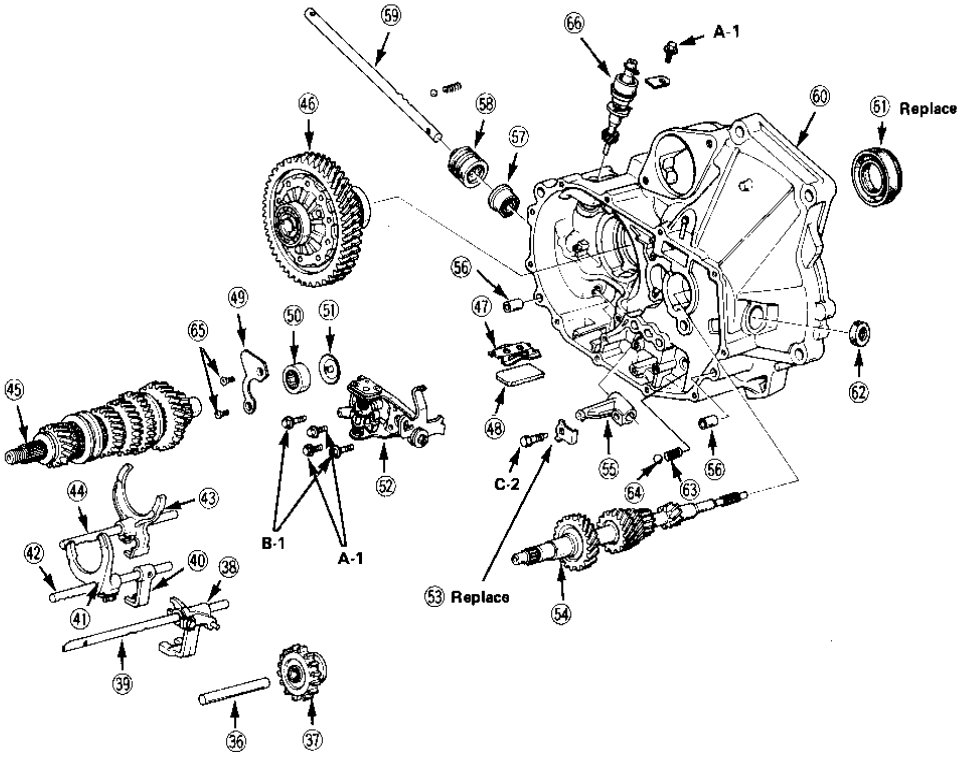

(36) **REVERSE IDLER GEAR SHAFT**
(37) **REVERSE IDLER GEAR**
Removal, page 15-10
Installation, page 15-31
(38) **REVERSE SHIFT GUIDE**
(39) **REVERSE SHIFT SHAFT**
(40) **3rd GEAR SHAFT GUIDE**
(41) **3rd GEAR SHIFT FORK**
(42) **3rd GEAR FORK SHAFT**
(43) **1st GEAR SHIFT FORK**
(44) **1st GEAR FORK SHAFT**
(45) **COUNTERSHAFT ASSEMBLY**
Disassembly, page 15-11
Measurement, page 15-12
Inspection, page 15-15
(46) **DIFFERENTIAL**
Removal, page 15-22
Dis/assembly, Section 17
(47) **HOLD-DOWN PLATE**
(48) **MAGNET**
(49) **BEARING RETAINER PLATE**
(50) **NEEDLE BEARING**
(51) **OIL BARRIER PLATE**
(52) **SHIFT ARM HOLDER**
Removal, page 15-21
Disassembly, page 15-26
Assembly, page 15-26
(53) **LOCK PLATE**
(54) **MAINSHAFT**
Removal, page 15-11
Measurement, page 15-16
Inspection, page 15-17
(55) **GEAR SHIFT ARM**
(56) **DOWEL PIN**
(57) **SEAL**
(58) **BOOT**
(59) **GEAR SHIFT ROD**
(60) **CLUTCH HOUSING**
(61) **SEAL**
(62) **DUST SEAL**
(63) **DETENT SPRING**
(64) **DETENT BALL**
(65) **DETENT FLAT SCREW**
(66) **SPEEDOMETER DRIVEN GEAR**
Replacement, page 15-6

Speedometer Driven Gear

Replacement

1. Remove the 6 x 1.0 mm bolt, then pull speedometer holder out.

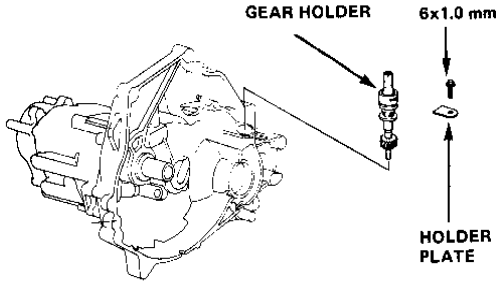

2. Remove the speedometer driven gear from the gear holder.

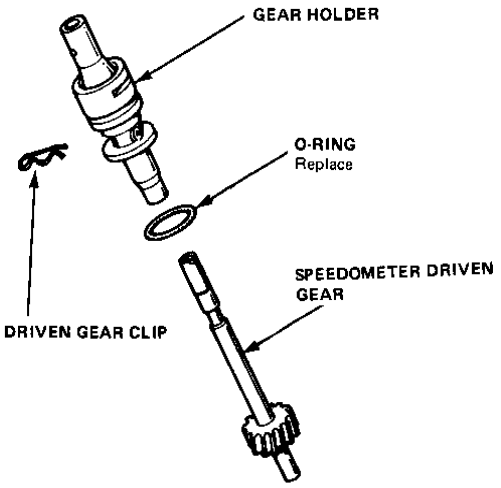

3. Remove the driven gear clip then the speedometer driven gear. Check the gear for wear, and if excessively worn, replace it.

4. Assemble the gear holder and install the new speedometer driven gear.

Speedometer Driven Gear Identification	
Model	Gear Teeth
1500 Hatchback DX: with P175/70R 13 tires 1500 Hatchback S: with 175/SR 13 tires 1500 Sedan with P175/70R 13 tires 1500 Wagon with P175/70R 13 tires	20 Teeth

5. Align the slot in the gear holder with the lock plate and then set the holder in the clutch housing. Tighten the lock plate with the 6 x 1.0 mm bolt.

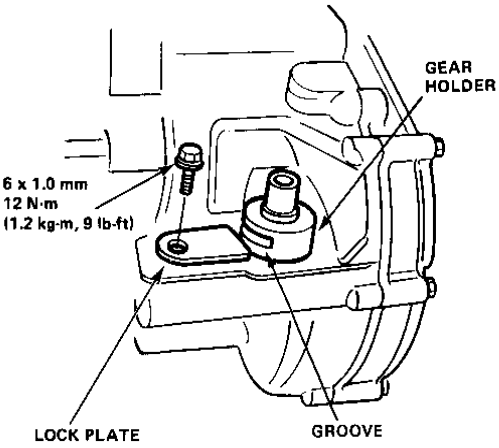

5th Gear Housing

Thrust Inspection

1. Remove the six 5th gear housing mounting bolts.

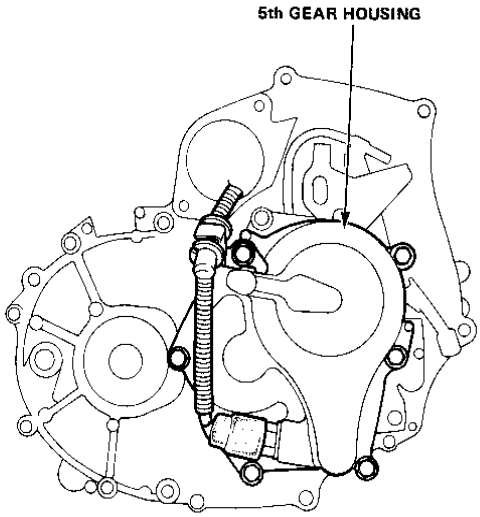

2. Remove the spring pin from the 5th gear shift fork.

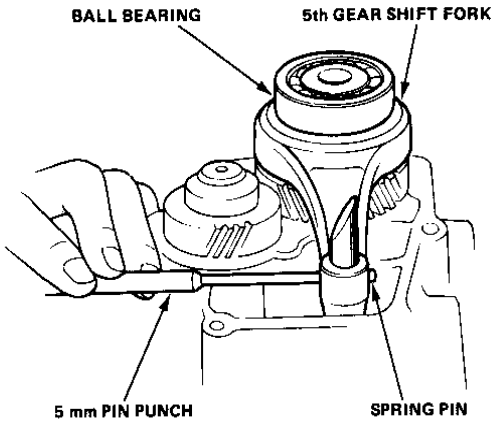

3. Remove the outside parts from the mainshaft.

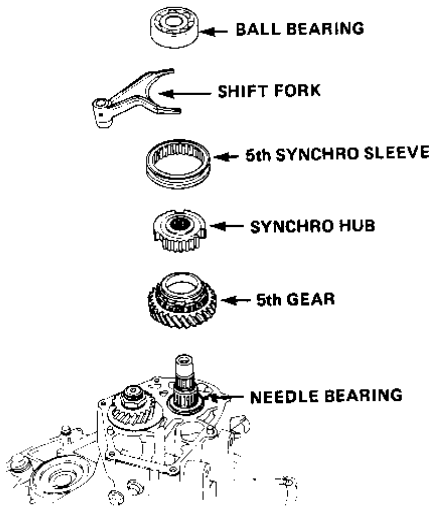

4. Reinstall the synchro hub and the ball bearing onto the mainshaft.

5. Clean all sealant residue from the transmission housing, then measure from the top of the ball bearing's outer race to the mounting flange for the 5th gear housing. Measure at two points and average the reading.

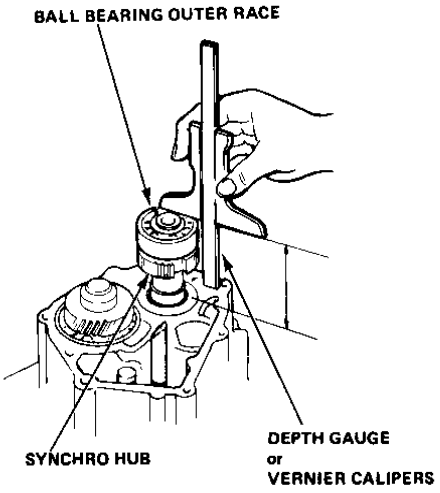

(cont'd)

5th Gear Housing

Thrust Inspection (cont'd)

6. Remove the 52 mm snap ring and the oil guide plate from the 5th gear housing.

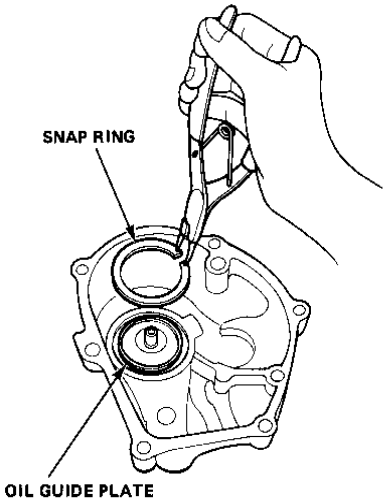

7. Place a straight edge on the 5th gear housing and measure the depth of the snap ring thrust shim installation hole. Measure at two points and average the readings. Subtract the thickness of the straight edge from the reading.

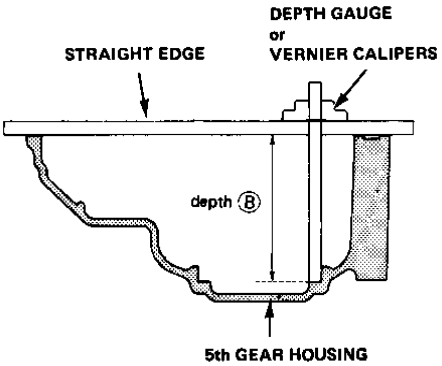

8. Select the correct thickness snap ring as follows:
   (a) Subtract the bearing height (step 5) from the depth of the end cover (step 7).
   (b) Substract the Standard Clearance 0.11 mm – 0.18 mm (0.004 – 0.007 in.) from the dimension determined in step 8a.

EXAMPLE:

Housing depth:	57.00 mm (2.244 in.)
Bearing height:	-54.50 mm (2.145 in.)
	2.50 mm (0.099 in.)
	2.50 mm (0.099 in.)
Snap ring height: (minimum)	-0.11 mm (0.004 in.)
	2.39 mm (0.095 in.)
	2.50 mm (0.099 in.)
Snap ring height: (maximum)	-0.18 mm (0.007 in.)
	2.32 mm (0.092 in.)

Select the Snap ring in the range between 2.39 mm (0.095 in.) and 2.32 mm (0.092 in.) from the parts list.

Parts Number	Thickness
23931-PE6-000	0.500 mm (0.0196 in.)
23932-PE6-000	1.100 mm (0.0433 in.)
23942-PE6-000	1.125 mm (0.0442 in.)
23933-PE6-000	1.150 mm (0.0452 in.)
23943-PE6-000	1.175 mm (0.0462 in.)
23934-PE6-000	1.200 mm (0.0472 in.)
23944-PE6-000	1.225 mm (0.0482 in.)
23935-PE6-000	1.250 mm (0.0492 in.)
23945-PE6-000	1.275 mm (0.0501 in.)
23936-PE6-000	1.300 mm (0.0511 in.)
23946-PE6-000	1.325 mm (0.0521 in.)
23937-PE6-000	1.350 mm (0.0531 in.)
23947-PE6-000	1.375 mm (0.0541 in.)
23938-PE6-000	1.400 mm (0.0551 in.)
23948-PE6-000	1.425 mm (0.0561 in.)
23939-PE6-000	1.450 mm (0.0570 in.)
23949-PE6-000	1.475 mm (0.0580 in.)
23940-PE6-000	1.500 mm (0.0590 in.)
23950-PE6-000	1.525 mm (0.0600 in.)
23941-PE6-000	1.550 mm (0.0610 in.)
23951-PE6-000	1.575 mm (0.0620 in.)

NOTE: If the measurements determined in 8b are greater than the thickest snap ring, you may use two snap rings (For the example above, you could use the 1,250 mm and the 1,100 mm ring for a total of 2,350).

CAUTION: Do not use more than two rings together.

Transmission Housing

Disassembly

1. Drive out the spring pin securing the fifth gear shift fork to the shaft.
2. Remove the ball bearing.

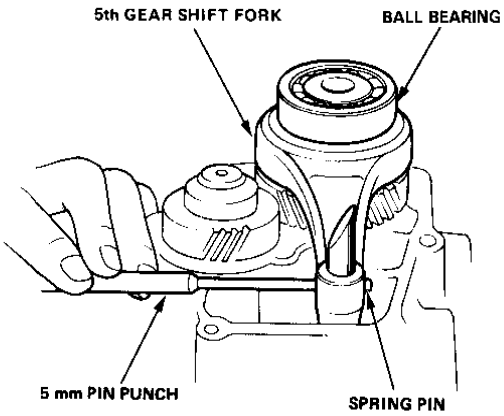

3. Remove the shift fork and synchro hub as a unit. Then remove the synchro ring and spring and the mainshaft 5th gear.

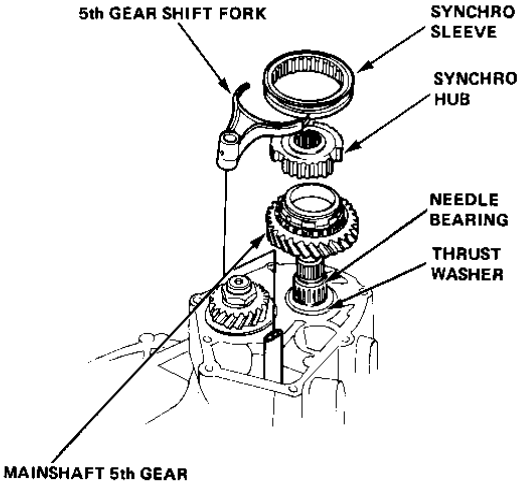

4. Remove detent ball retaining bolts, springs and balls.

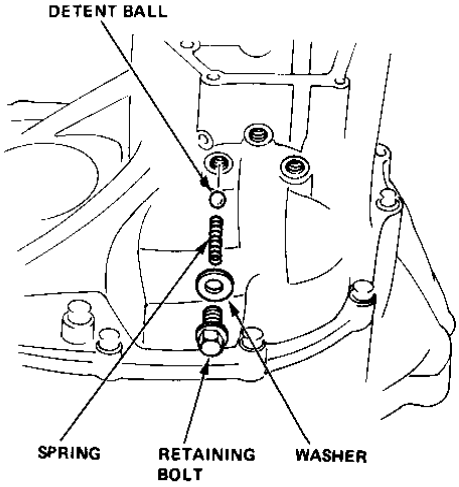

(cont'd)

Transmission Housing

Disassembly (cont'd)

5. Remove the 11 bolts from the housing.

6. Loosen the transmission housing by tapping on bosses around its edge with a soft hammer. Remove the attachment from the bearing remover, then screw its threaded end into the hole in the transmission housing as shown. Expand the snapring while tapping upward on the case using the bearing remover.

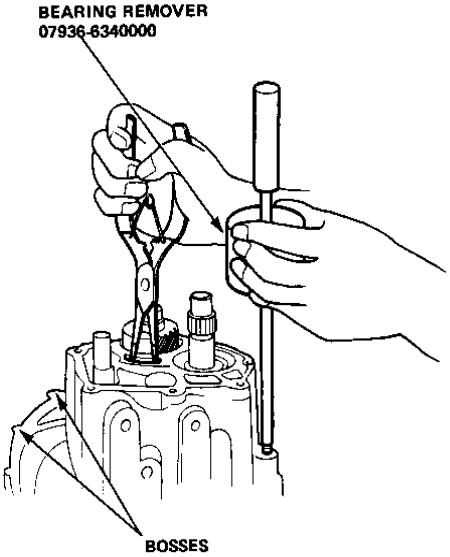

Mainshaft/Countershaft

Removal

1. Pull out the reverse idler gear shaft and remove the gear.

2. Remove the dowel pin.

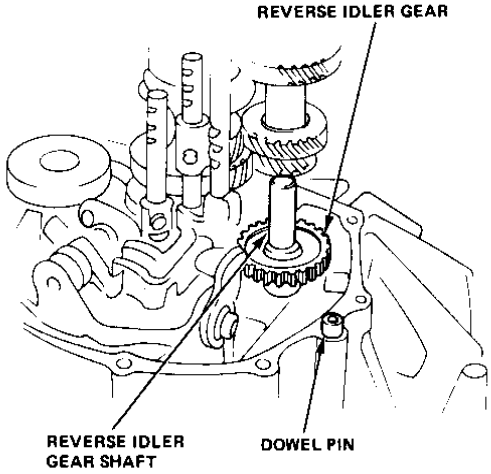

3. Remove the nut and the special spring washer on the reverse shift fork, then remove the reverse shift fork.

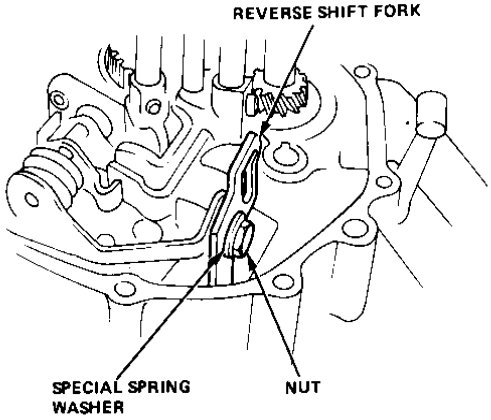

4. Remove the detent ball and spring from the reverse shift fork.

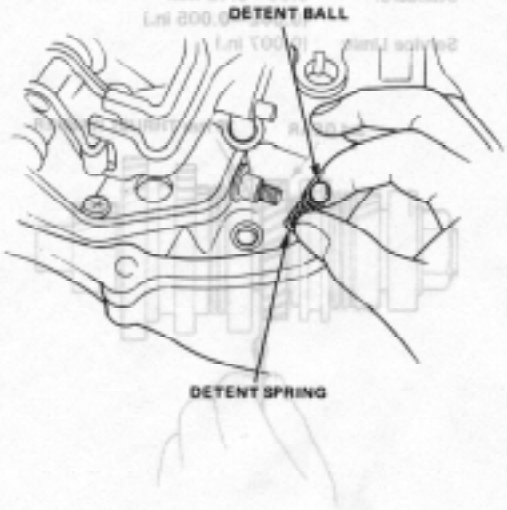

5. Bend down the tabs on the three locking plates and remove the bolts.

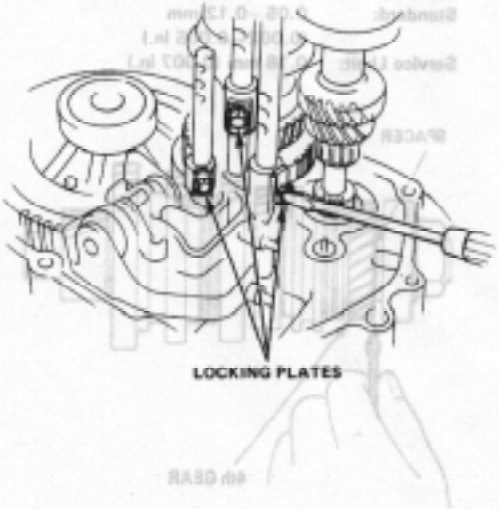

6. Remove the reverse shift shaft.
7. Remove the reverse shift guide.
8. Remove the 1st/2nd gear shift shaft.
9. Remove the 3rd/4th gear shift shaft and shift fork.
10. Shift the synchro into the 2nd and remove the 1st/2nd gear shift fork.

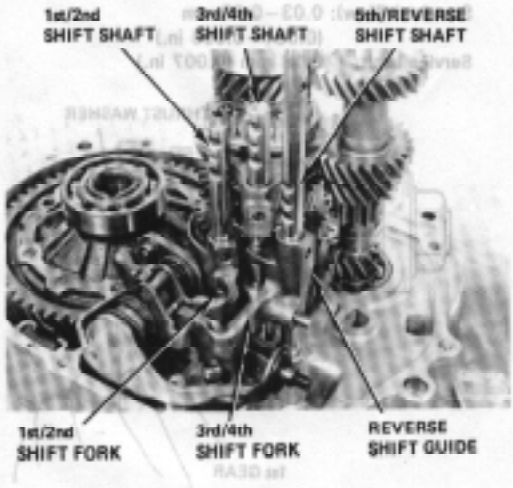

11. Remove the countershaft and the mainshaft as an assembly.

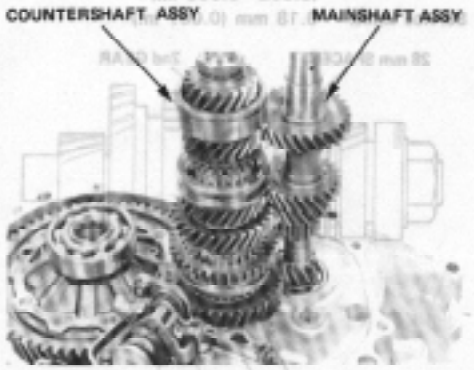

Countershaft Assembly

Clearances

Before disassembling the countershaft assembly, inspect it for wear or damage, and make the following measurements:

NOTE: If any measurement is out of tolerance, the countershaft assembly must be disassembled and spacer collars or the thrust washer changed (page 15-13).

1. Measure the clearance between thrust washer and 1st gear.

1st Gear Clearance
Standard (New): 0.03–0.08 mm (0.001–0.003 in.)
Service Limit: 0.18 mm (0.007 in.)

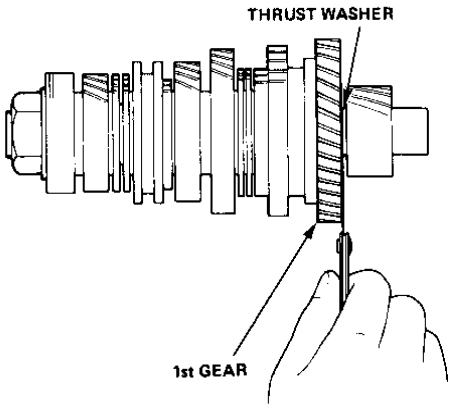

2. Measure the clearance between the 28 mm spacer and 2nd gear.

2nd Gear Clearance:
Standard (New): 0.05–0.12 mm (0.002–0.005 in.)
Service Limit: 0.18 mm (0.007 in.)

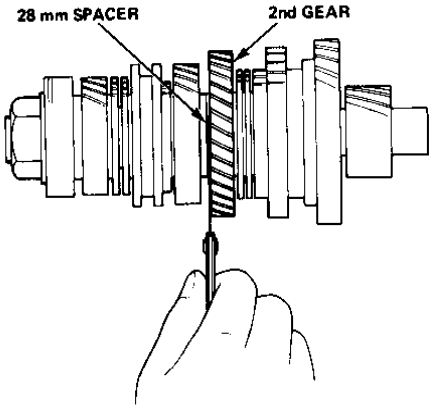

3. Measure the clearance between the 26 mm thrust washer and 3rd gear.

3rd Gear
Standard: 0.05–0.12 mm (0.002–0.005 in.)
Service Limit: (0.007 in.)

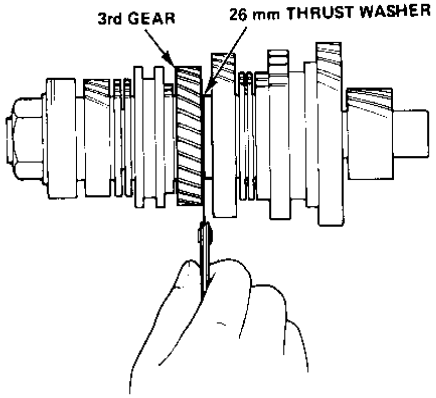

4. Measure the clearance between 4th gear and its spacer.

4th Gear
Standard: 0.05–0.12 mm (0.002–0.005 in.)
Service Limit: 0.18 mm (0.007 in.)

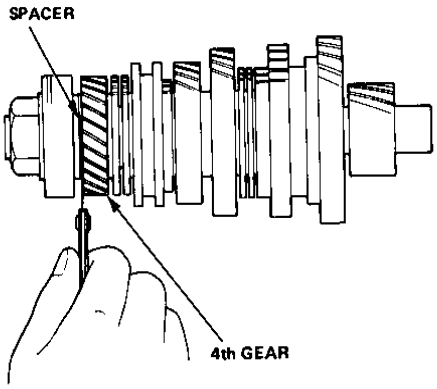

5. If the measurements are within tolerance, and the gears are not worn or damaged, the countershaft need not be disassembled.

6. If any measurements are out of tolerance, figure the additional thickness required to bring each clearance back within service limit. Then reinstall both mainshaft and countershaft assemblies in the clutch housing, temporarily reinstall the transmission housing, and install the mainshaft holder.

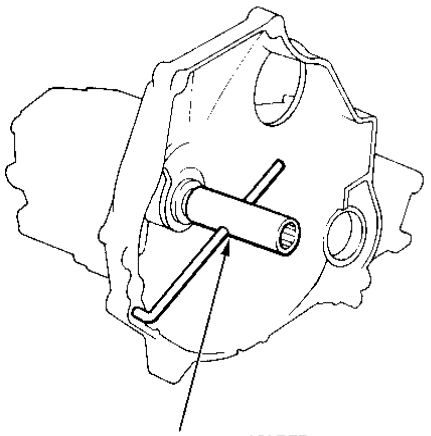

MAINSHAFT HOLDER
07923-6890101 or 07924-6340300

7. Raise the tab on countershaft locknut using a hammer and prick punch. Remove the locknut using a 32 mm socket at least 55 mm (2.2 in.) deep, and a breaker bar.

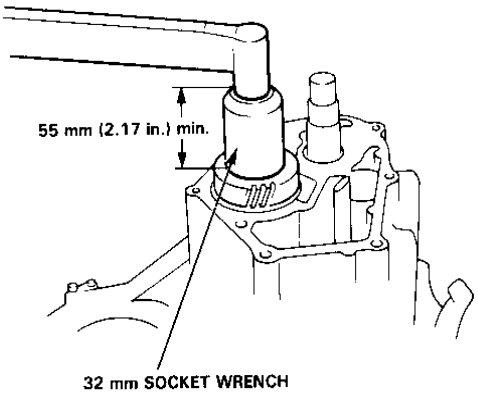

8. Remove the countershaft 5th gear and spring washer.

9. Remove the transmission housing, and pull the gear assemblies out of the clutch housing, then disassemble countershaft assy.

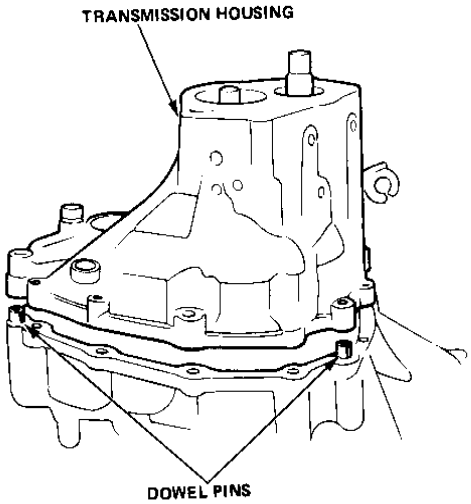

10. Based on what you figured in step 6; select the correct thrust washer or spacer listed below.

Replacement 1st gear Thrust Washers

Class	Thickness
A	1.95—1.98 mm (0.077—0.078 in.)
B	1.92—1.95 mm (0.076—0.077 in.)
C	1.89—1.92 mm (0.074—0.076 in.)

(cont'd)

Countershaft Assembly

Clearance (cont'd)

Replacement Spacers

Length
28.01–28.04 mm (1.103–1.104 in.)
28.04–28.07 mm (1.104–1.105 in.)
28.07–28.10 mm (1.105–1.106 in.)
28.10–28.13 mm (1.106–1.107 in.)

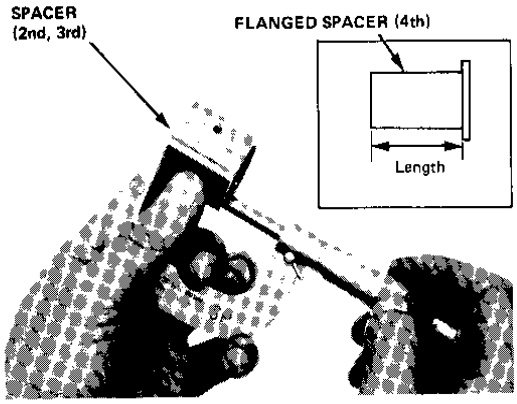

11. After the countershaft has been reassembled, place both countershaft and mainshaft back in the clutch housing; reinstall transmission housing and mainshaft holder, then torque countershaft locknut to 90 N·m (65 lb-ft). loosen and retighten to same torque.

12. Disassemble the transmission and recheck clearances (page 15-12). If clearances are in tolerance, stake shoulder on locknut with center punch.

Countershaft Assembly

Index

NOTE:
- Clean all parts thoroughly in solvent and dry with compressed air.
- The 28 mm spacers should be marked as they are removed, so that they can be reinstalled correctly.

Lubricate all parts with oil before reassembly.

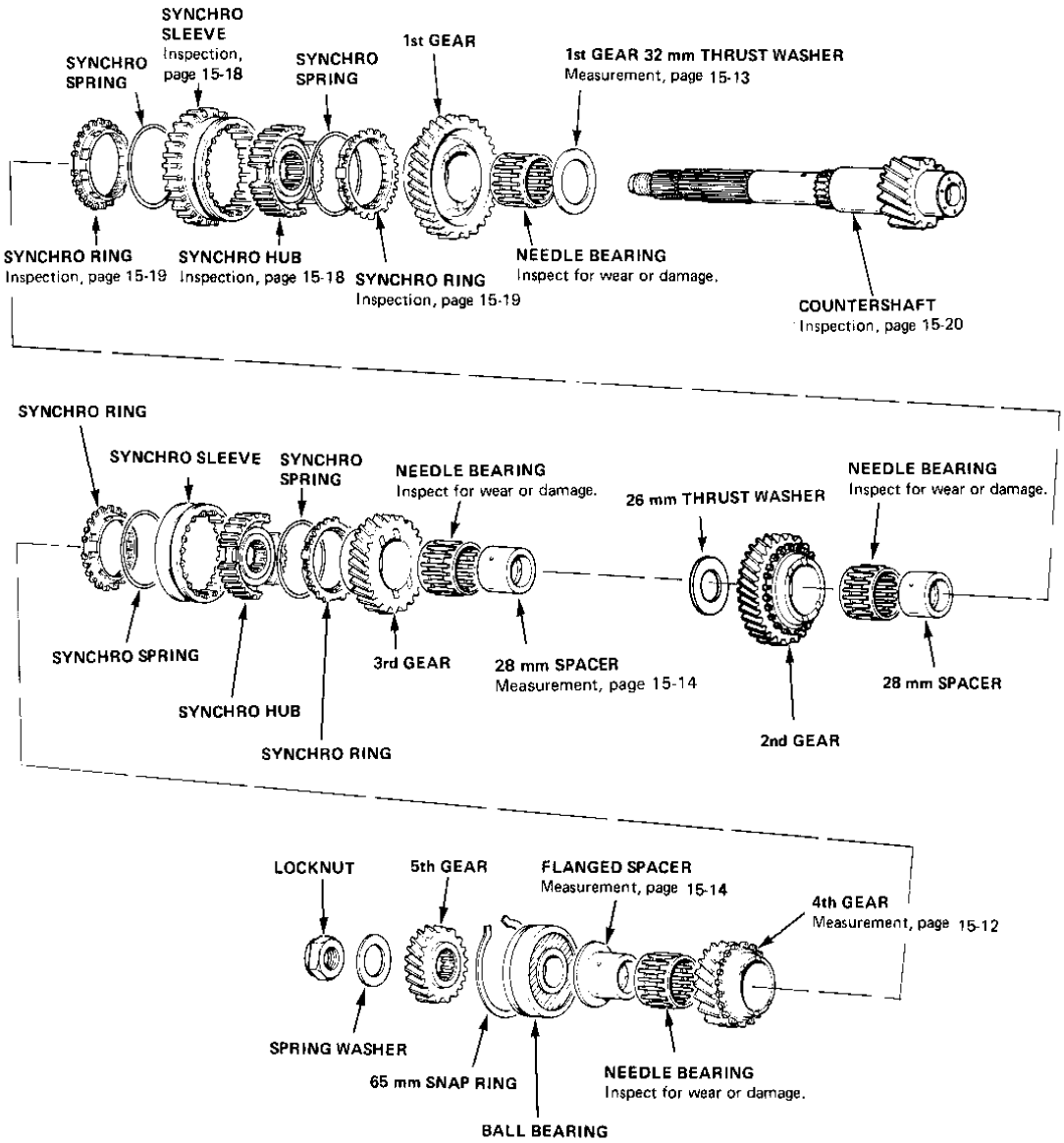

Mainshaft Assembly

Clearances

1. Install the parts below onto the mainshaft.

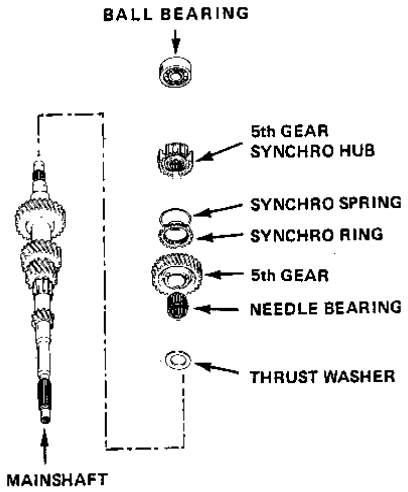

2. Hold the ball bearing outer race with a socket and compress it to 30 kg (66 lb).

3. Measure clearance between 5th gear and its thrust washer.

Standard:	**0.05–0.38 mm (0.0020–0.0150 in.)**
Service Limit:	**0.4 mm (0.016 in.)**

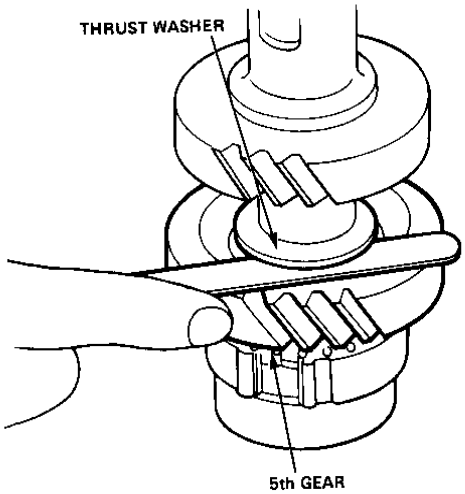

4. Replace the thrust washer if the clearance exceeds the service limit.
   Recheck the clearance with the new thrust washer.
   If the clearance is still over the service limit, replace 5th gear and recheck.

Mainshaft Assembly

Index

NOTE:
- Clean all parts thoroughly in solvent and dry with compressed air.

Lubricate all parts with oil before reassembly.

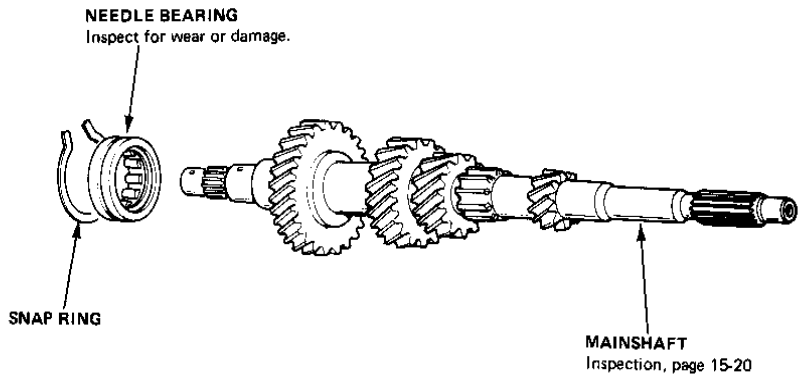

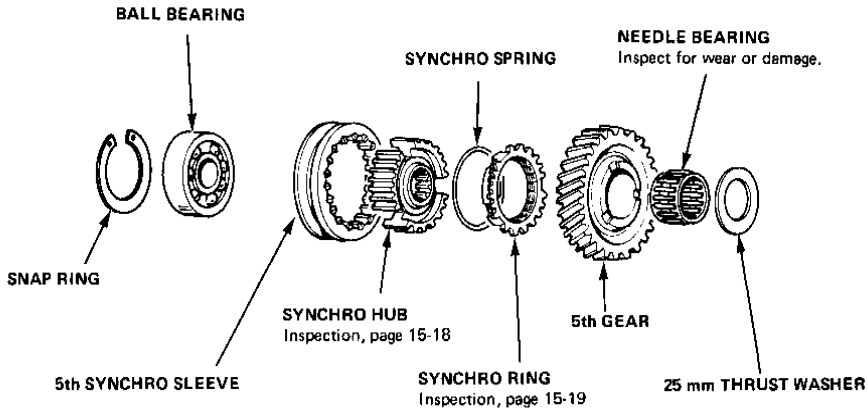

Shift Fork to Synchro Sleeve

Clearance

1. Check clearance between each shift fork and its matching synchro sleeve.

Standard:	**0.45–0.65 mm (0.018–0.026 in)**
Service Limit:	**1.0 mm (0.039 in)**

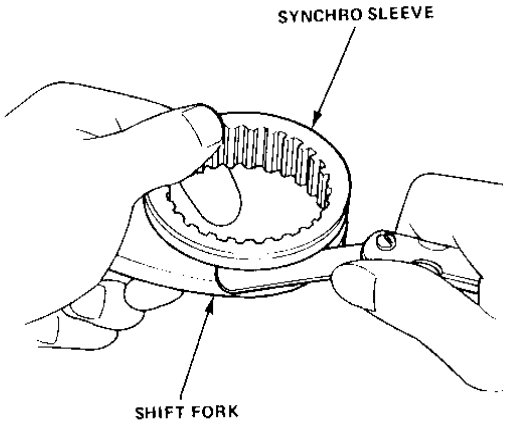

2. If the clearance exceeds the service limit, measure the thickness of the shift fork fingers.

Finger Thickness:
(All shift forks)

Standard:	**6.4–6.5 mm (0.252–0.256 in)**
Service Limit:	**6.0 mm (0.236 in)**

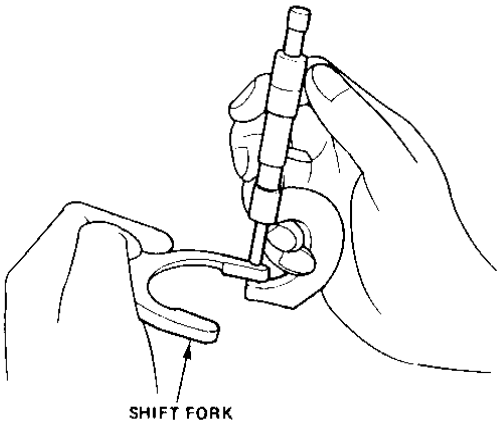

3. If any shift forks are replaced, recheck fork-to-sleeve clearance. If still out of tolerance, replace the synchro sleeve and recheck.

Synchro Sleeve/Synchro Hub

Installing Synchro Hubs in Sleeves

Each synchro sleeve has three sets of longer teeth (120 degrees apart) that must be matched with the three sets of deeper grooves in the hub when assembled.

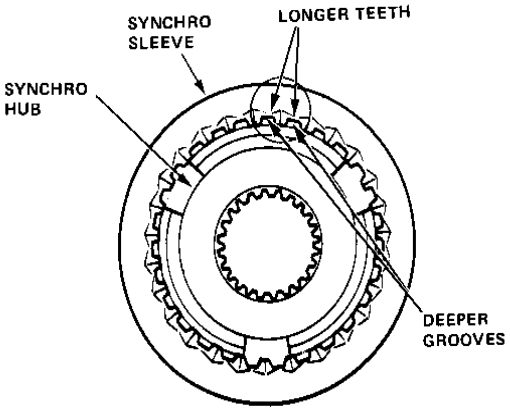

Synchro Sleeve and Hub Inspection

1. Inspect the gear teeth on all synchro hubs and sleeves for rounded off corners, indicating wear.
2. Install each hub in its mating sleeve and check for freedom of movement.

   NOTE: If replacement is required, always replace the synchro sleeve and hub as a unit.

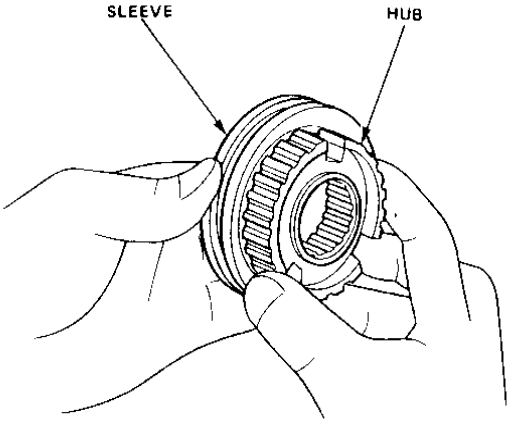

Gear and Synchro Ring

Inspections

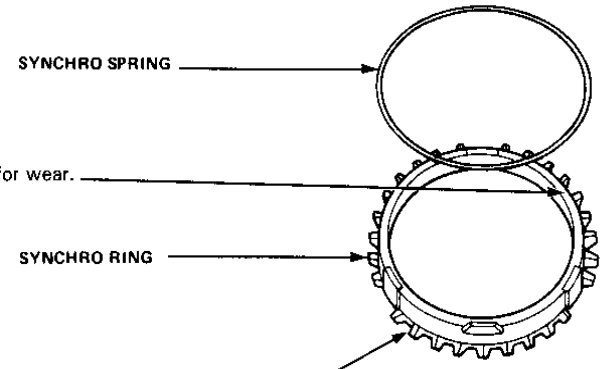

1. Inspect the inside of synchro ring for wear.

2. Inspect the synchro ring teeth and matching teeth on gear for wear (rounded off).

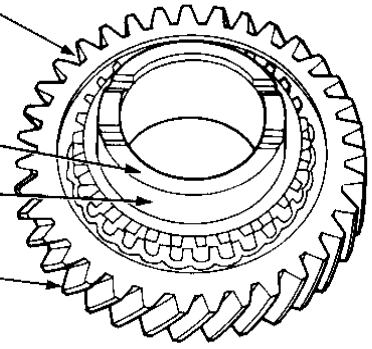

3. Inspect the gear hub thrust surface for wear.

4. Inspect the cone surface for wear on 1st, 2nd, 3rd and 4th countershaft gears; 5th mainshaft gear.

5. Inspect the teeth on all gears for uneven wear, scoring, galling, cracks.

6. Place the synchro ring on matching gear cone and rotate until it stops (approx. 10 to 20 degrees), then measure the clearance between ring and gear.

   Ring-to-Gear Clearance:
   Standard (New): 0.85—1.1 mm (0.033—0.043 in.)
   Service Limit: 0.4 mm (0.016 in.)

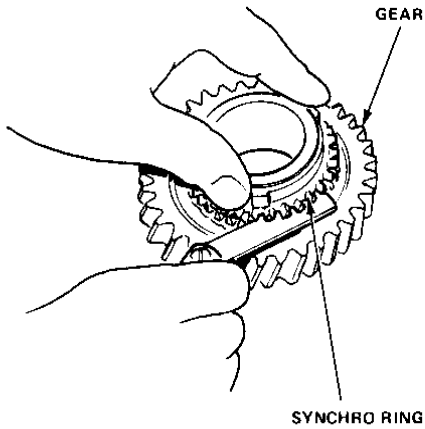

7. Separate the synchro ring and gear, and coat them with oil.

8. Install the synchro spring on synchronizer ring.

9. Put the synchro ring on gear cone again, rotate until it stops, then set it aside for later reassembly.

Mainshaft

Inspection

1. Measure gear and bearing O.D.s.

Standard:	**A:**	**27.997–28.010 mm (1.102–1.103 in)**
	B:	**21.987–22.0 mm (0.866–0.866 in)**
Service Limit:	**A:**	**27.94 mm (1.100 in)**
	B:	**21.93 mm (0.863 in)**

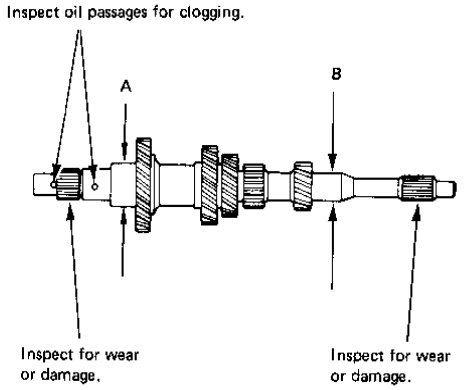

2. Replace the mainshaft if any readings are out of tolerance.

3. Inspect for runout.

Standard:	**0.02 mm (0.0008 in)**
Service Limit:	**0.05 mm (0.0019 in)**

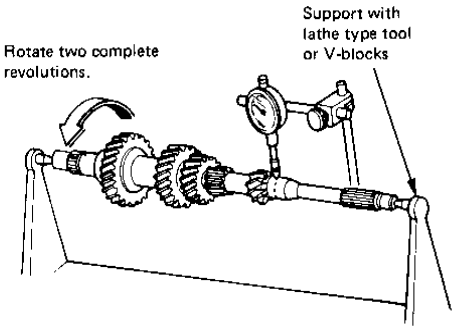

4. Replace the mainshaft if the reading is out of tolerance.

Countershaft

Inspection

1. Measure gear and bearing O.D.s.

Standard:	**A:**	**30.004–30.017 mm (1.181–1.182 in)**
	B:	**31.984–32.000 mm (1.259–1.260 in)**
Service Limit:	**A:**	**29.94 mm (1.179 in)**
	B:	**31.93 mm (1.257 in)**

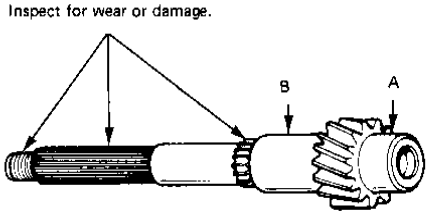

2. Replace the countershaft if any readings are out of tolerance.

3. Inspect for runout.

Standard:	**0.02 mm (0.0008 in)**
Service Limit:	**0.05 mm (0.0019 in)**

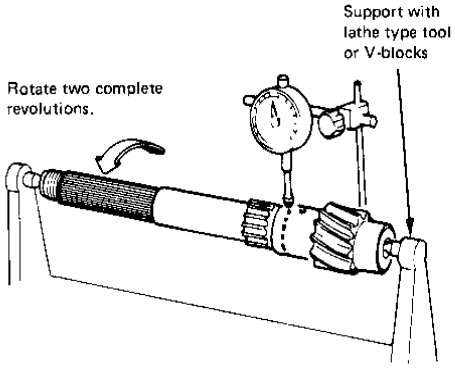

4. Replace the countershaft if the reading is out of tolerance.

Shift Shaft

Inspection

1. Remove the 3rd gear shift shaft guide from its shaft with a spring pin driver.

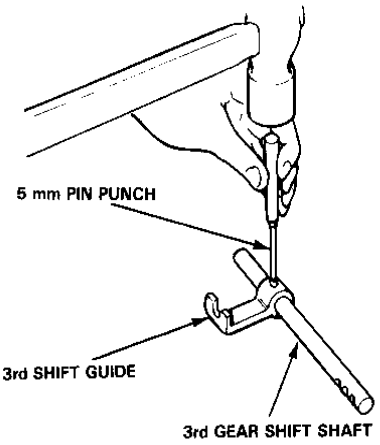

2. Inspect the shift shaft for wear or damage.

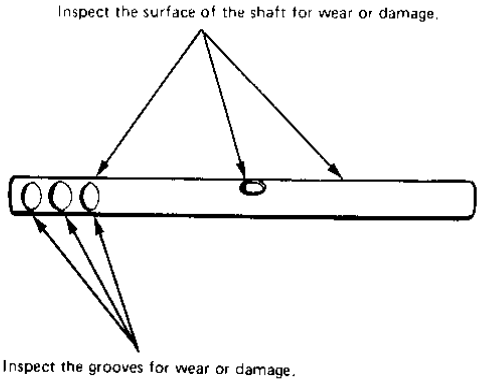

Shift arm Holder

Removal

1. Remove the special bolts and the flange bolts and then remove the shift arm holder.

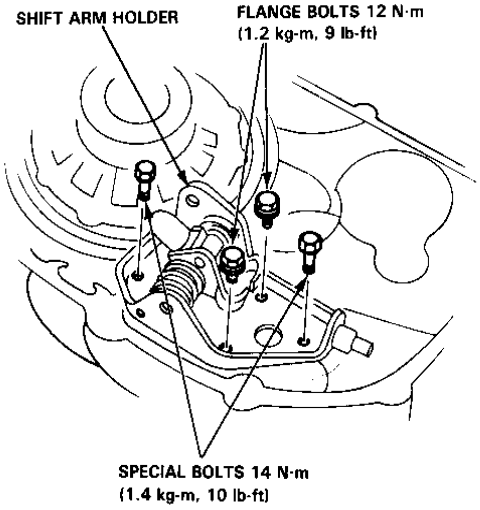

Shift Rod Removal

1. Bend down the tab on the locking plate, remove the special bolt, then slip out the shift rod.

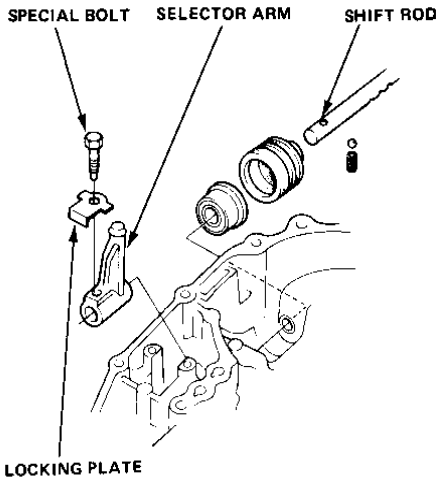

Differential Seal

Removal

1. If seals are to be replaced, or if the differential needs repair, remove the differential assembly. Refer to section 17 for differential repair.

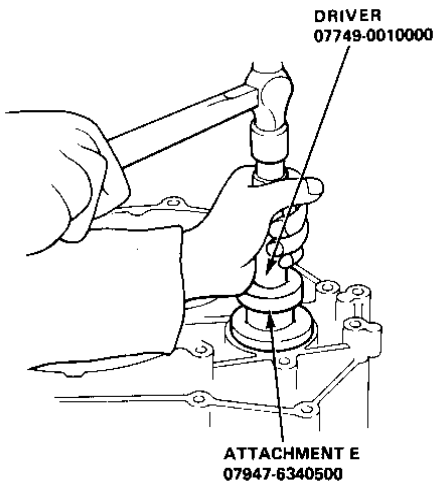

2. Remove the 72 mm snap ring in the transmission housing.

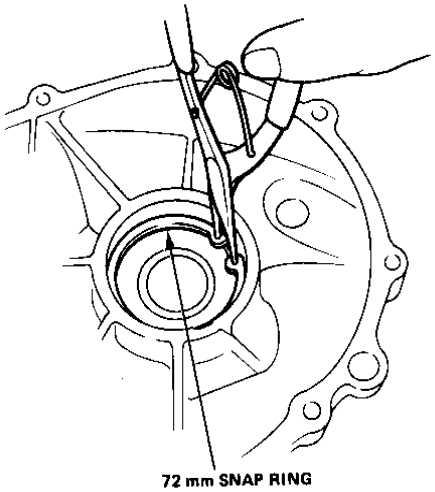

3. Drive out the seal from the clutch housing.

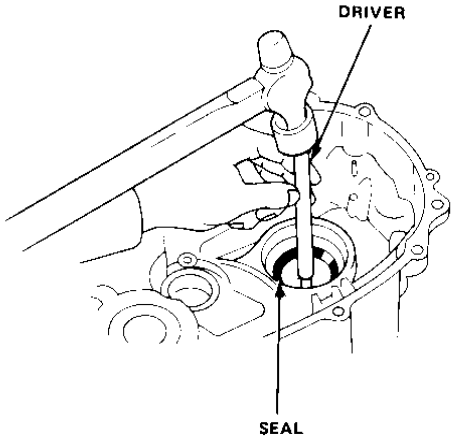

4. Drive out the seal from the transmission housing.

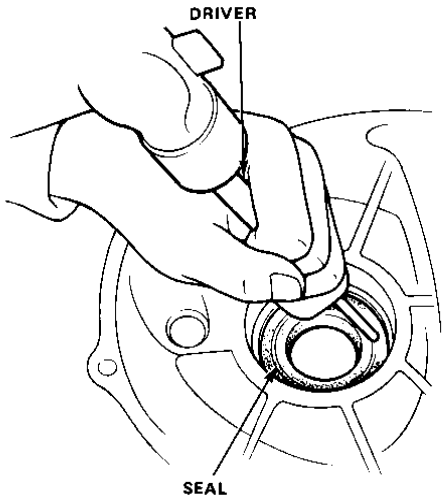

Countershaft Needle Bearing

Replacement

1. Remove the bearing retainer plate.

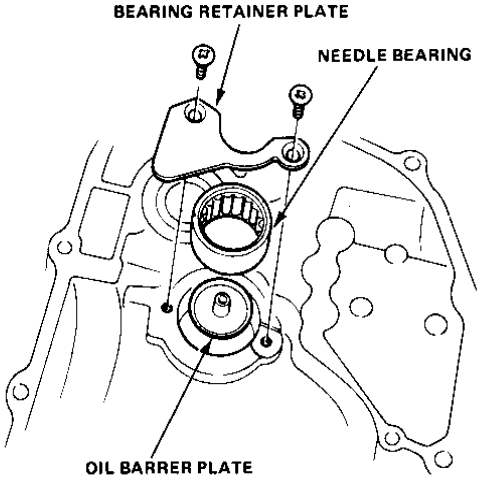

2. Insert Bearing Remover with attachment into countershaft bearing.

3. Raise slide hammer rapidly and strike against handle.
   Repeat several times to remove bearing.

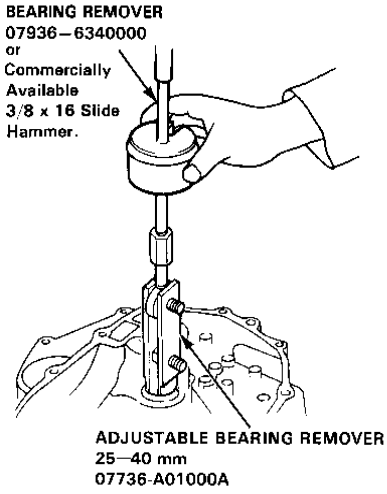

4. Remove the oil barrier plate, wash thoroughly, then reinstall it.

5. Drive in the countershaft needle bearing with the special tools.

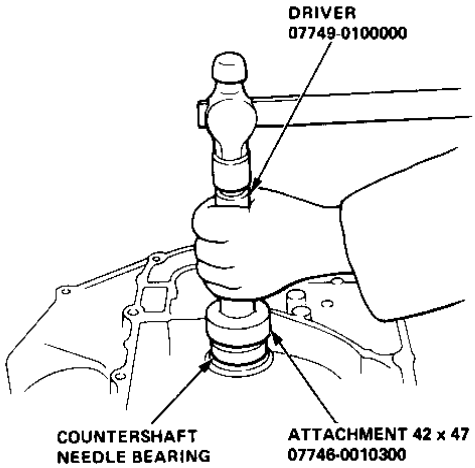

6. Reinstall the bearing retainer plate. Tighten the screws with an impact driver, then stake the screw heads.

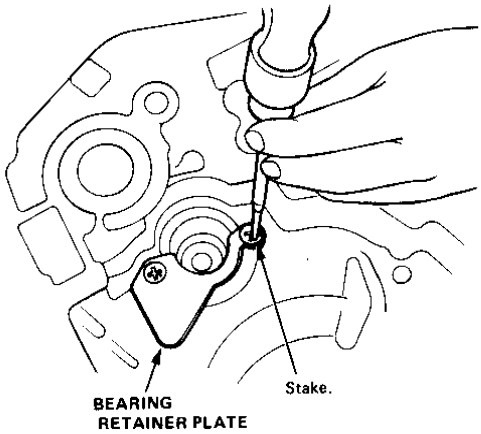

Mainshaft Bearing

Replacement

1. Remove the mainshaft bearing and seal from the clutch housing by driving out with a drift.

   NOTE: Always install a new bearing and seal. Do not reinstall old ones.

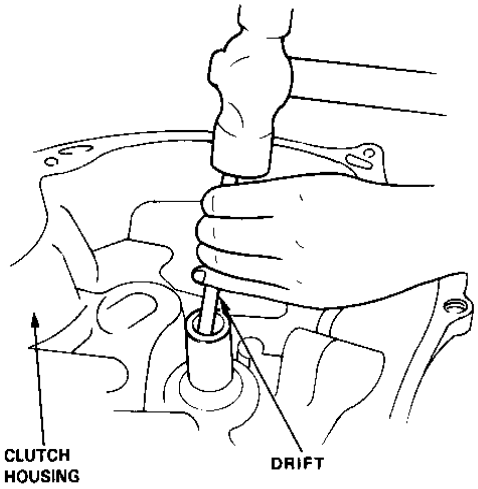

2. Drive in the mainshaft oil seal.

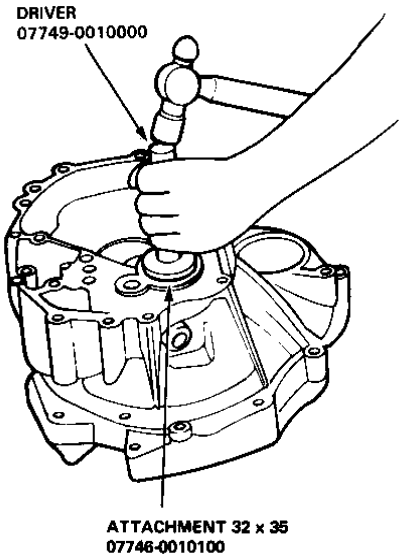

3. Drive in the mainshaft bearing with a support block placed under the case to support the bearing boss.

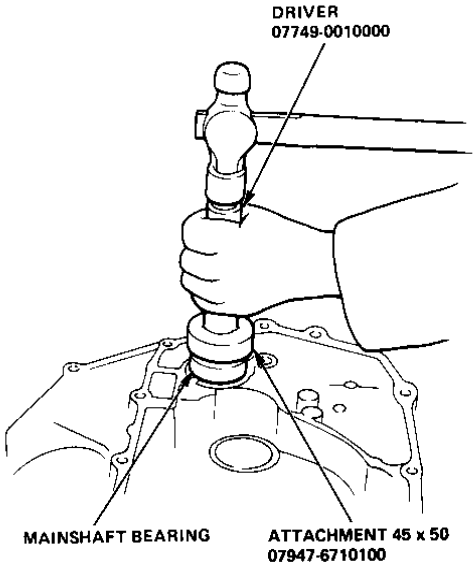

Mainshaft/Countershaft Bearing

Replacement (Transmission Housing)

1. Remove the mainshaft and countershaft bearings from transmission housing; expand each snap ring with snap ring pliers, then push bearing out by hand.

   CAUTION: To avoid damaging the housing, fully expand each snap ring before pushing out the bearing.

   NOTE: Do not remove the snap rings unless it is necessary to clean the grooves in the housing.

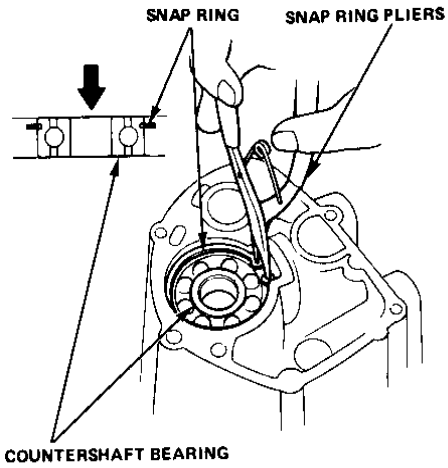

2. Expanding each snap ring with snap ring pliers, insert the new bearing partway into it, then release pliers. Push the bearing down into the transmission until ring snaps in place around it.

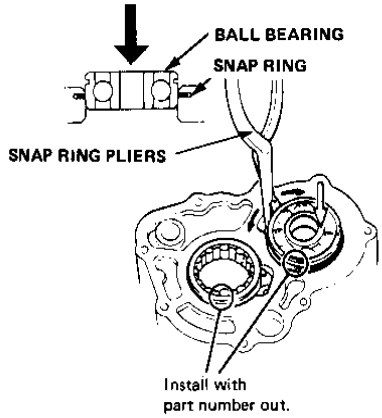

3. Check that the snap ring is securely seated in both the grooves of the bearing and the case.

   NOTE: To confirm proper snap ring seating and condition, measure snap ring gap A as installed:

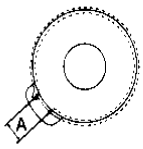

Bearing	Dimension A as installed
Mainshaft	3.5—4.7 mm (0.14—0.19 in.)
Countershaft	5.7—8.8 mm (0.22—0.35 in.)

Reseat or carefully replace the snap ring if the gap is outside the specification.

Shift Arm Holder

Disassembly

1. Use an impact driver to remove the retainer plate screws, then remove the retainer plate.
2. Pull out the shift arm shaft and interlock shaft.
3. Remove the detent ball and spring.
4. Remove the shift arm, shift springs, and spring retainers.

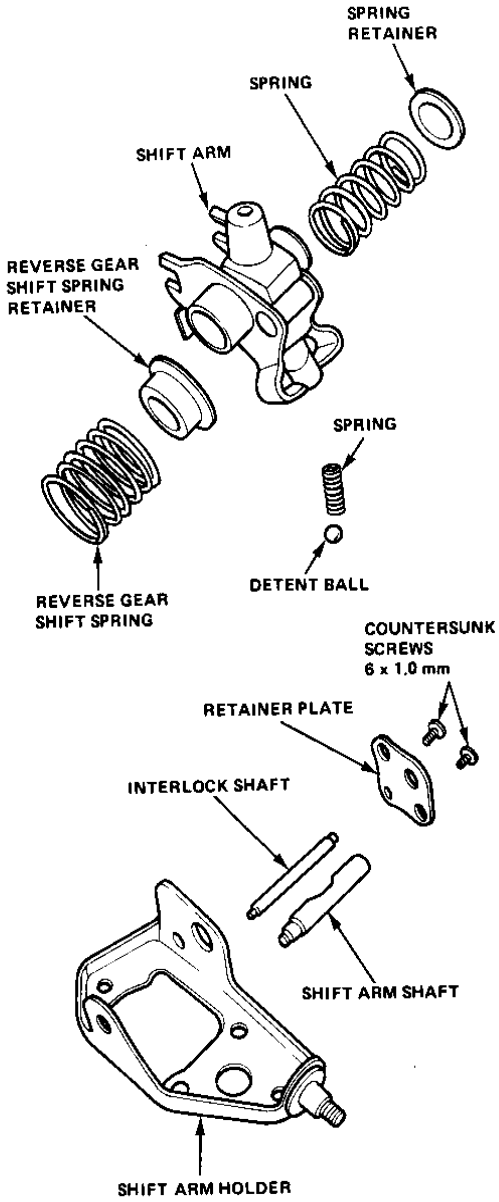

Reassembly

1. Install the shift arm, shift springs, and spring retainers in shift arm holder.

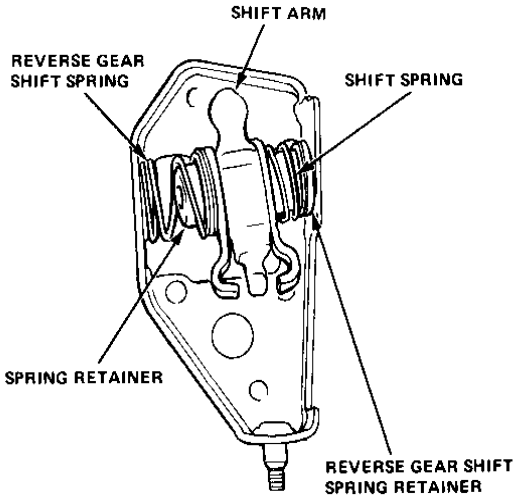

2. Turn the shift arm holder upside down and place the detent ball and spring in the shift arm.

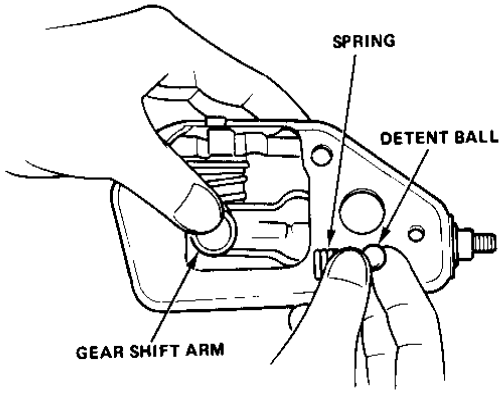

3. Hold the detent ball in place with a small screwdriver, align groove in shift arm shaft with detent ball, then insert the shaft through shift arm holder and shift arm.

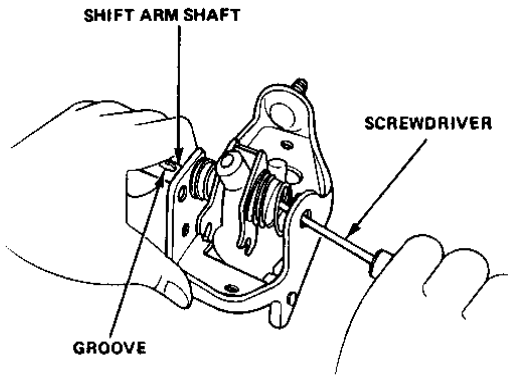

4. Insert the interlock shaft.

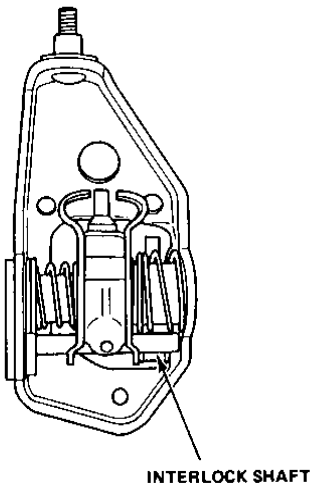

5. Install the retainer plate.

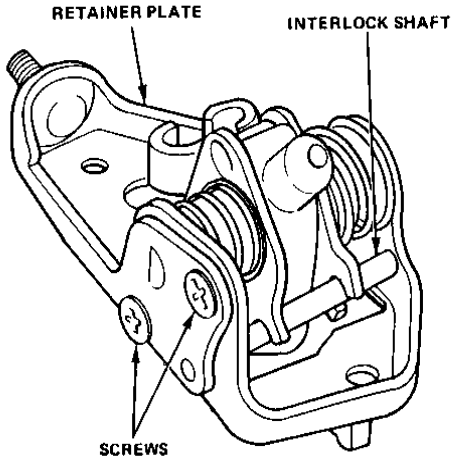

6. Tighten the retainer plate screws with impact driver, then stake the screw heads.

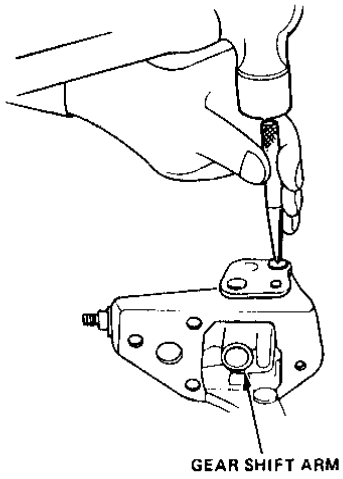

NOTE: After reassembly, check the gear shift arm for free movement.

Transmission Assy

Reassembly

1. Clean all liquid gasket residue from the mating surfaces of transmission and clutch housings.

2. Install the shift rod, selector arm, new lock plate and bolt. Bend the lock tab on lock plate over against bolt head.

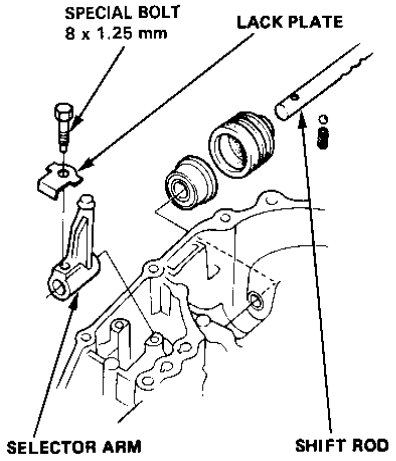

3. Install the 72 mm snap ring in the clutch housing, then install the differential (Section 17).

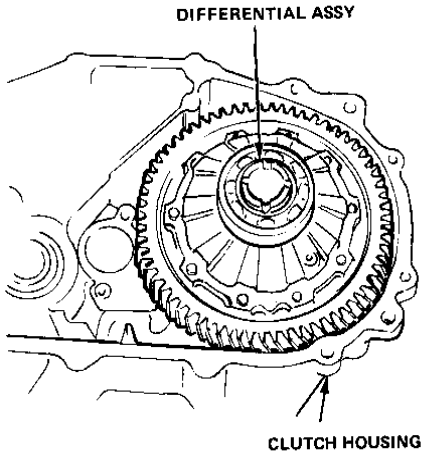

4. Align the shift arm with selector arm and install the shift arm holder. Install the bolts, using the correct bolt in each hole, and torque as shown.

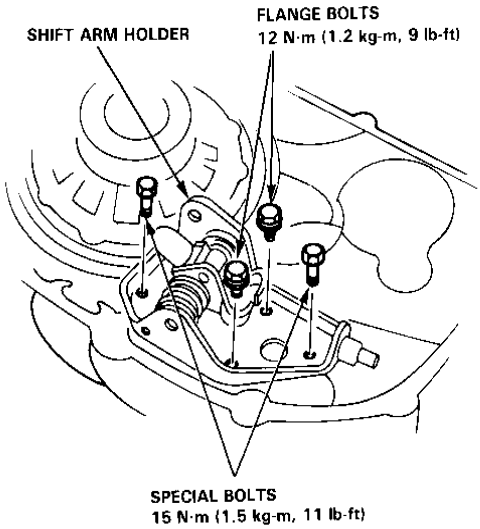

5. Install the mainshaft and countershaft as an assembly.

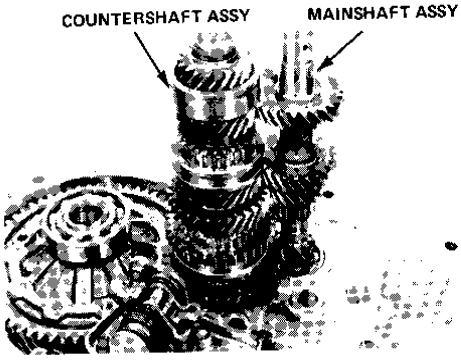

6. Lift the countershaft 1st and 2nd synchro sleeve to shift into 2nd gear.

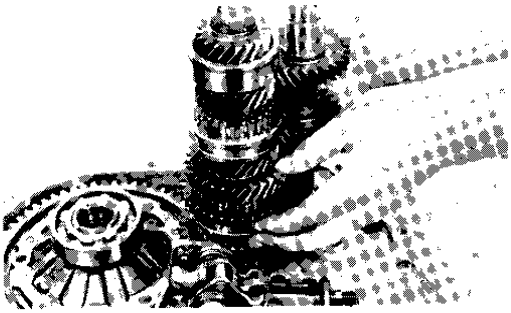

7. Install the 1st/2nd gear shift fork on synchro sleeve, then rotate into place so that lugs on back of fork fit over shift arm.

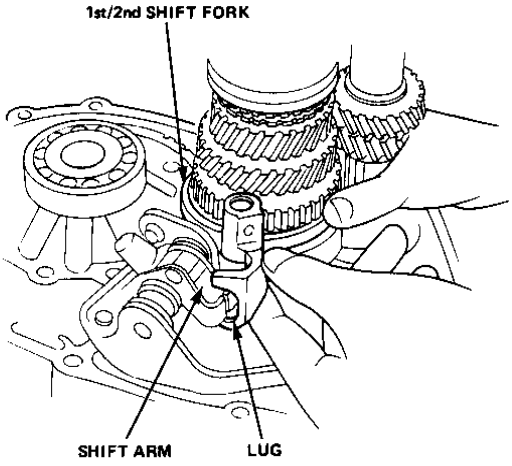

8. Insert the 3rd/4th shift fork shaft into 3rd/4th shift guide, and install the 5 mm spring pin as shown.

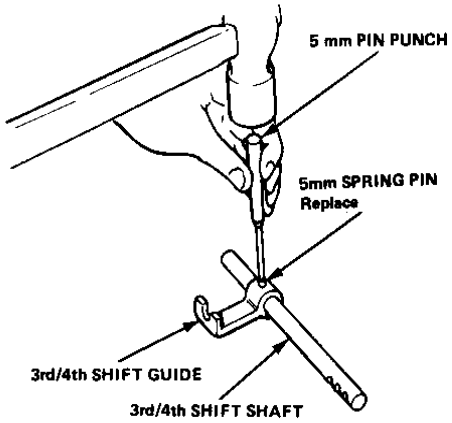

9. Insert the 3rd/4th shift fork shaft into 3rd/4th shift fork, then install the shift fork and hook shift guide to shift arm.

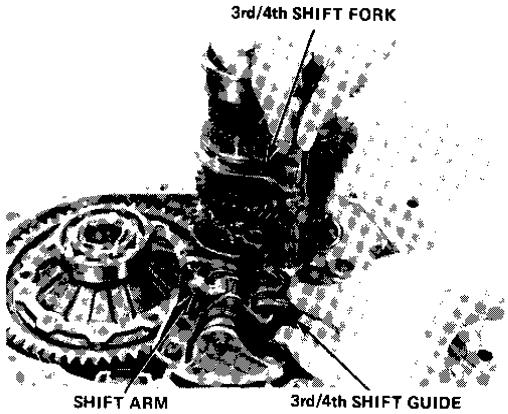

(cont'd)

Transmission Assy

Reassembly (cont'd)

10. Install the 1st/2nd shift shaft.

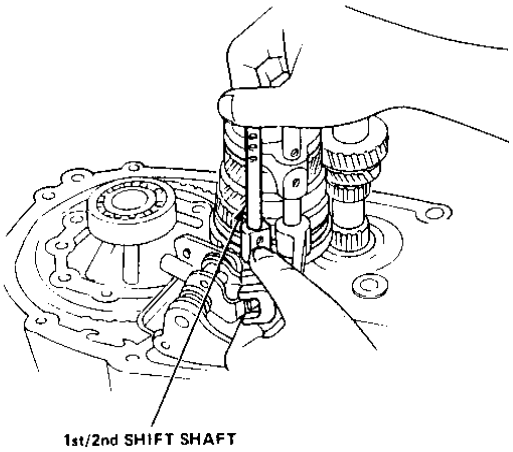

11. Hook the 5th/reverse shift guide to shift arm, then install the shift shaft.

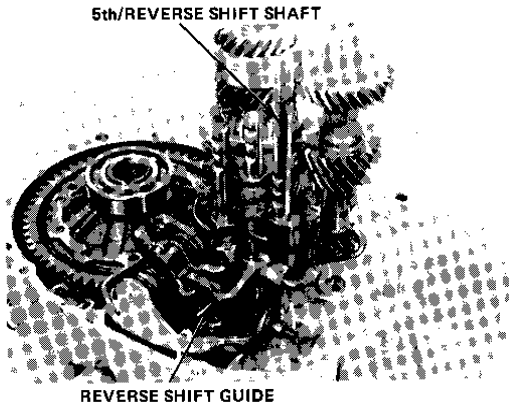

12. Install the spring and detent ball in hole in clutch housing.

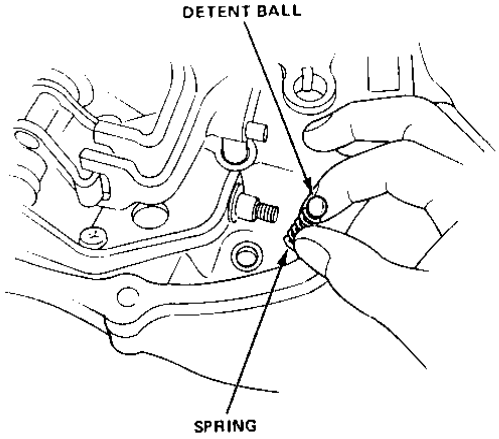

13. Install the reverse shift fork with special washer and nut.

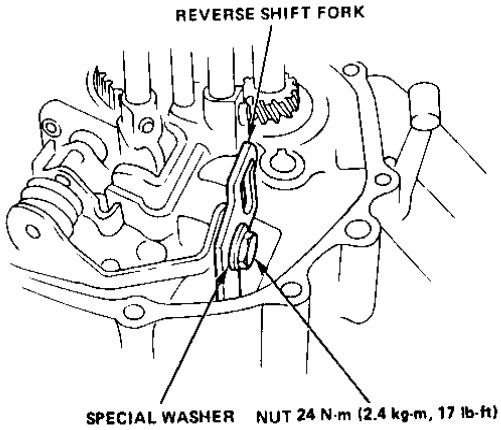

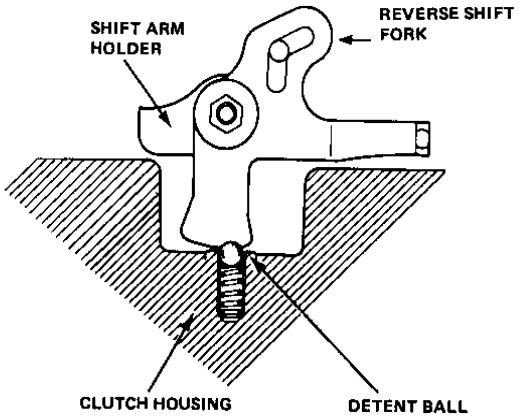

NOTE: Make sure that reverse shift fork is aligned with detent ball.

14. Install the reverse idler gear and shaft.

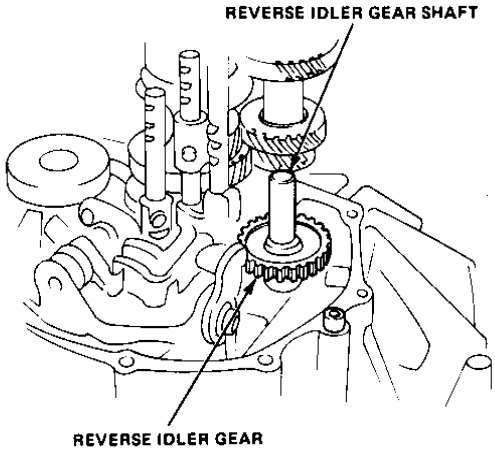

15. Install the three special bolts and lock plates on shift shafts then bend tab on each lock plate against bolt head.

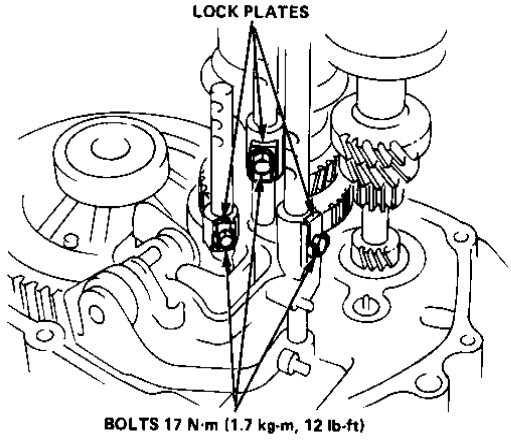

NOTE: To ease reassembly, lightly oil the shift shafts, transmission shafts, and differential bearings.

16. Apply liquid gasket to the clutch housing as shown below.

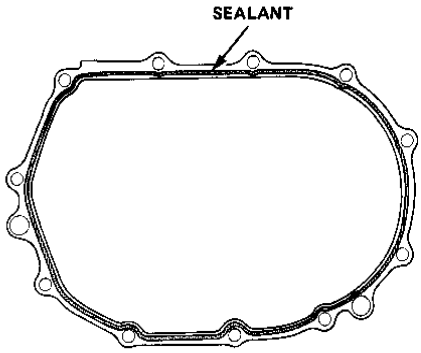

NOTE: This transmission uses no gasket between the major housings; use Honda P/N 08740-99986 sealant. Assemble the housings within 20 minutes after applying the sealant and allow it to cure at least 30 minutes after assembly before filling it with oil.

(cont'd)

Transmission Assy

Reassembly (cont'd)

17. Install the dowel pins on the clutch housing.

18. Install the transmission housing being careful to line up shafts. Expand countershaft bearing snap ring so that transmission housing can fall into place.

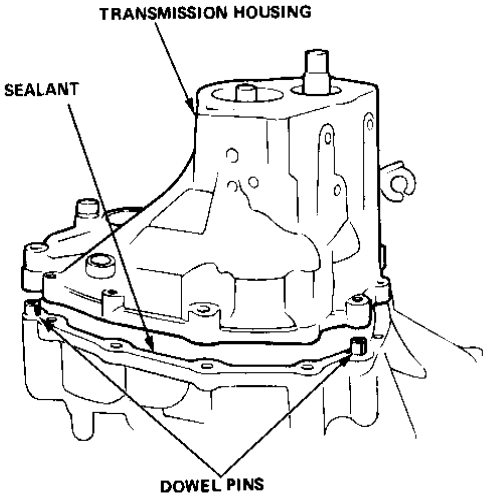

19. Torque bolts (8 x 1.25 mm) in sequence shown, 27 N·m (2.7 kg-m, 20 lb.ft).

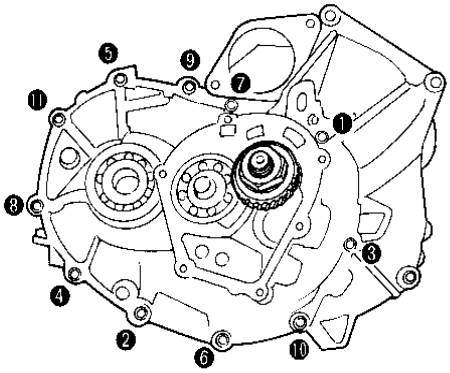

20. Install the three detent balls, washers, springs, and retaining screws.

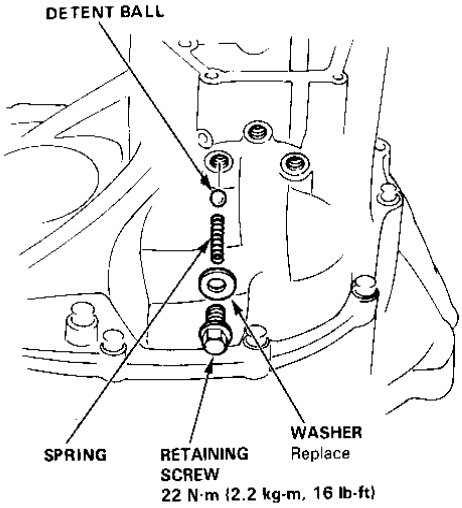

21. Install the thrust washer and the needle bearing.

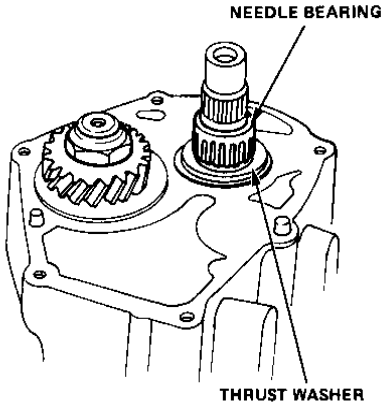

22. Install the synchro ring and the synchro spring.

23. Install the synchro hub and the synchro sleeve onto the shift fork. Install them onto the mainshaft.

    NOTE: Install the synchro hub with its raised inner shoulder facing down.

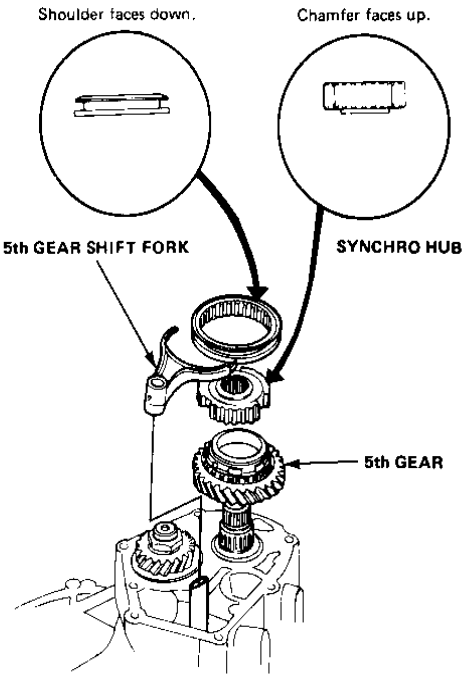

24. Install the bearing.

25. Drive the spring pin into the shift fork.

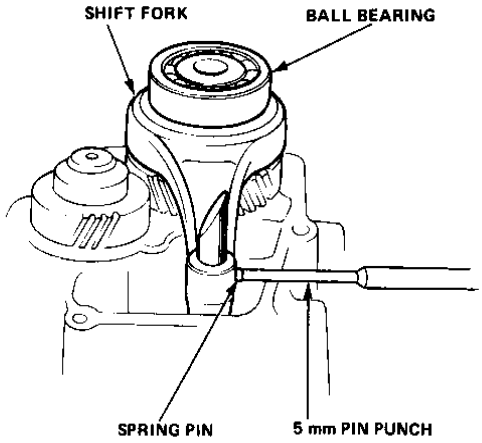

26. Apply sealant on the sealing surface of the transmission housing as shown.

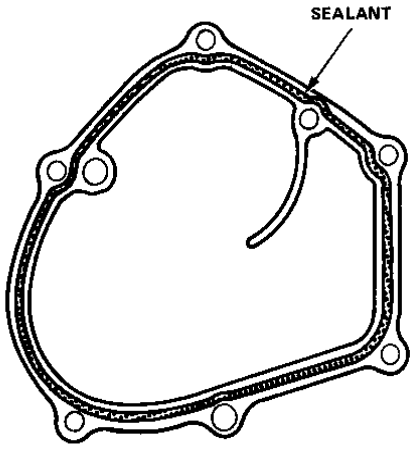

NOTE: This transmission uses no gaskets between the major housings; use Honda sealant, P/N 08740—99986. Assemble the housings within 20 minutes after applying the sealant and allow it to cure for at least 30 minutes after assembly before filling it with oil.

27. Install the 5th gear housing, and torque its bolts to 12 N·m (1.2 kg-m, 9 lb-ft).

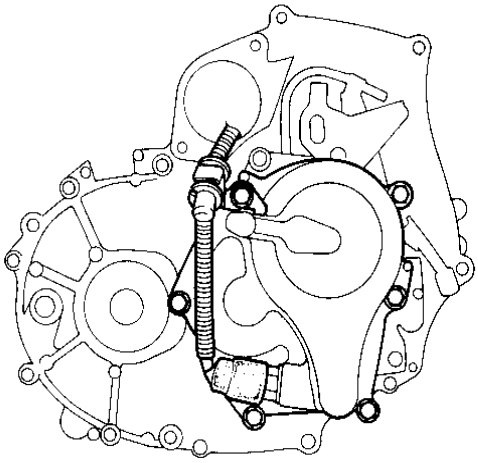

Differential Seal

Installation

1. Install the snap ring, align the log on housing slot.

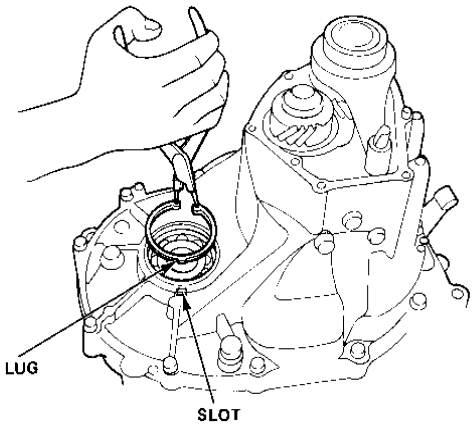

2. Measure the clearance between the snap ring and the bearing outer race.

Side clearance: 0—0.15 mm (0—0.059 in.)

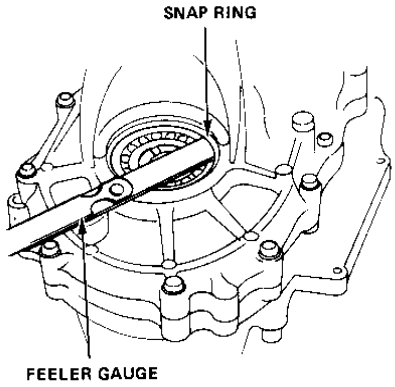

Select a snap ring of the correct thickness from the table below if the clearance is out of tolerance.

SNAP RINGS

PART NUMBER	THICKNESS
90414-PE6-000	2.45 mm (0.0965 in.)
90415-PE6-000	2.55 mm (0.1004 in.)
90416-PE6-000	2.65 mm (0.1043 in.)
90417-PE6-000	2.75 mm (0.1083 in.)
90418-PE6-000	2.85 mm (0.1122 in.)
90419-PE6-000	2.95 mm (0.1161 in.)

3. Apply grease to the seal, and then drive it into the clutch housing with the special tools.

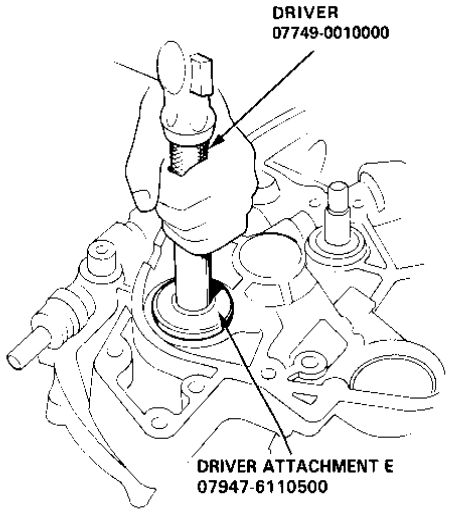

4. Apply grease to the seal, and then drive it into the transmission housing with the special tool.

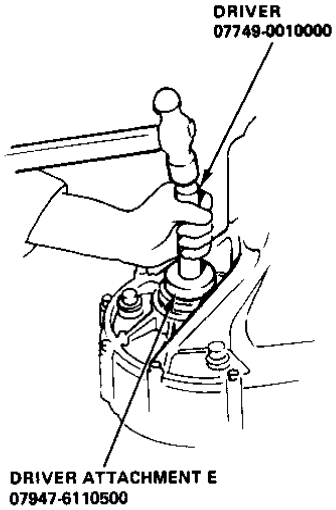

Transmission Assy

Installation

1. Place the transmission on transmission jack.

   NOTE: Clean and grease release bearing sliding surfaces.

2. Check that two 14 mm dowel pins are installed in the clutch housing.

3. Raise the transmission far enough to align dowel pins with matching holes in block.

4. Roll the transmission toward engine and fit mainshaft into clutch disc splines. If driver's side suspension was left in place, install new spring clips on both axles, then carefully insert left axle into differential as you install transmission.

   NOTE: New spring clips must be used on both axles.

   CAUTION: Make sure that axles fully bottom. Slide axle in until you feel spring clips engage differential.

5. Push and wiggle the transmission until it fits flush with engine flange.

6. Secure transmission to engine with mounting bolts from the engine side (12 x 1.25 x 70 mm). Torque to 68 N·m (6.8 kg-m, 50 lb-ft).

7. Install the rear transmission mount on the transmission housing. Torque its bolts to 65 N·m (6.5 kg-m, 47 lb-ft).

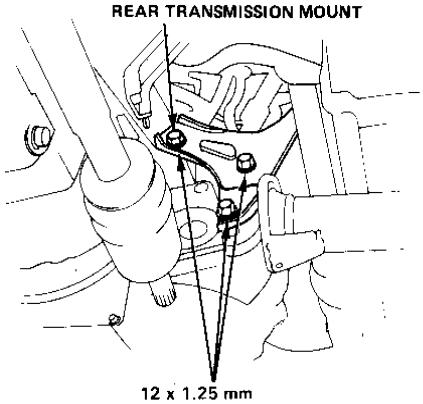

8. Install the engine torque bracket on the transmission housing. Torque its bolts to 45 N·m (4.5 kg-m, 33 lb-ft).

9. Loosely install the bolts for the front transmission mount, then torque them in the sequence shown.

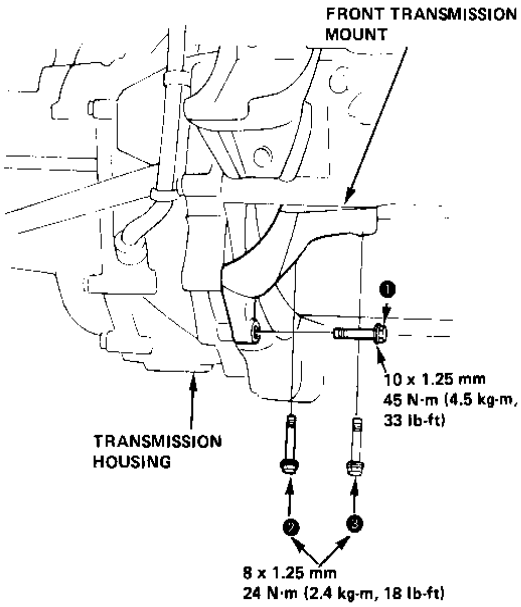

10. Install the starter mounting bolts and torque to 45 N·m (4.5 kg-m, 33 lb-ft).

11. Turn right steering knuckle/axle assembly outward far enough to insert free end of axle into transmission. Repeat on opposite side.

    CAUTION: Make sure that axles fully bottom. Slide axle in until you feel spring clips engage differential.

12. Reconnect the shift rod and shift lever torque rod.

13. Reconnect the lower arm ball joints and torque to 45 N·m (4.5 kg-m, 33 lb-ft).

14. Reconnect the tie-rod end ball joints and torque to 45 N·m (4.5 kg-m, 33 lb-ft).

15. Install the engine and wheelwell splash shields.

16. Reconnect the exhaust header pipe.

17. Install the front wheels, lower car to ground, and torque lug nuts to 110 N·m (11 kg-m, 80 lb-ft).

(cont'd)

Transmission Assy

Installation (cont'd)

18. Remove the hoist chain from the 8 mm bolt on the cylinder head.

19. Install the speedometer cable into the gear holder, then secure cable with clip and install boot.

20. Install the top transmission mounting bolts and torque to 45 N·m (4.5 kg-m, 33 lb-ft).

21. Connect the clutch cable to release arm, then attach cable housing end to transmission bracket.

22. Connect the engine compartment wiring:

    - Battery positive cable to starter.
    - Black/white wire to starter solenoid.
    - Green/black and yellow wires to back-up light switch.
    - Transmission ground cable.

23. With ignition key OFF, connect ground cable to battery and transmission.

24. Refill the transmission and adjust clutch free play. (Page 15-2)

25. Check the transmission for smooth operation.

Back-up Light Switch

Testing

1. Test the back-up light switch by placing the gear shift lever in reverse and turning the ignition switch to ON.

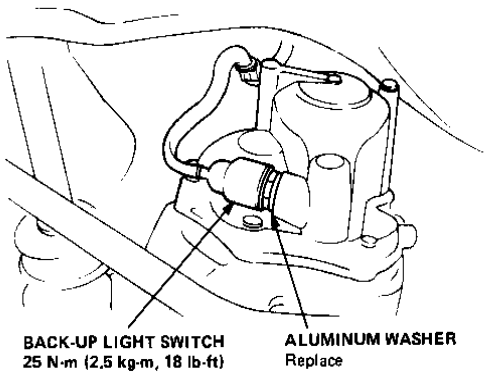

2. If back-up lights do not go on, remove the back-up light switch.

3. Using an ohmmeter, check the switch for continuity while pushing in on the switch plunger.

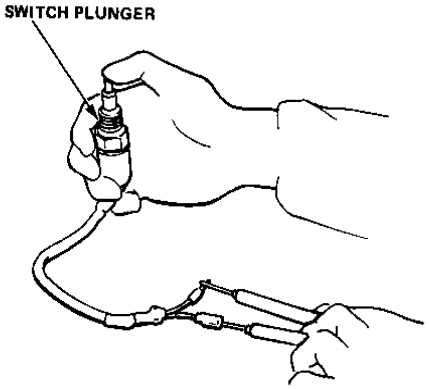

Gearshift Mechanism

Overhaul

NOTE: Inspect rubber parts for wear or damage when disassembling.

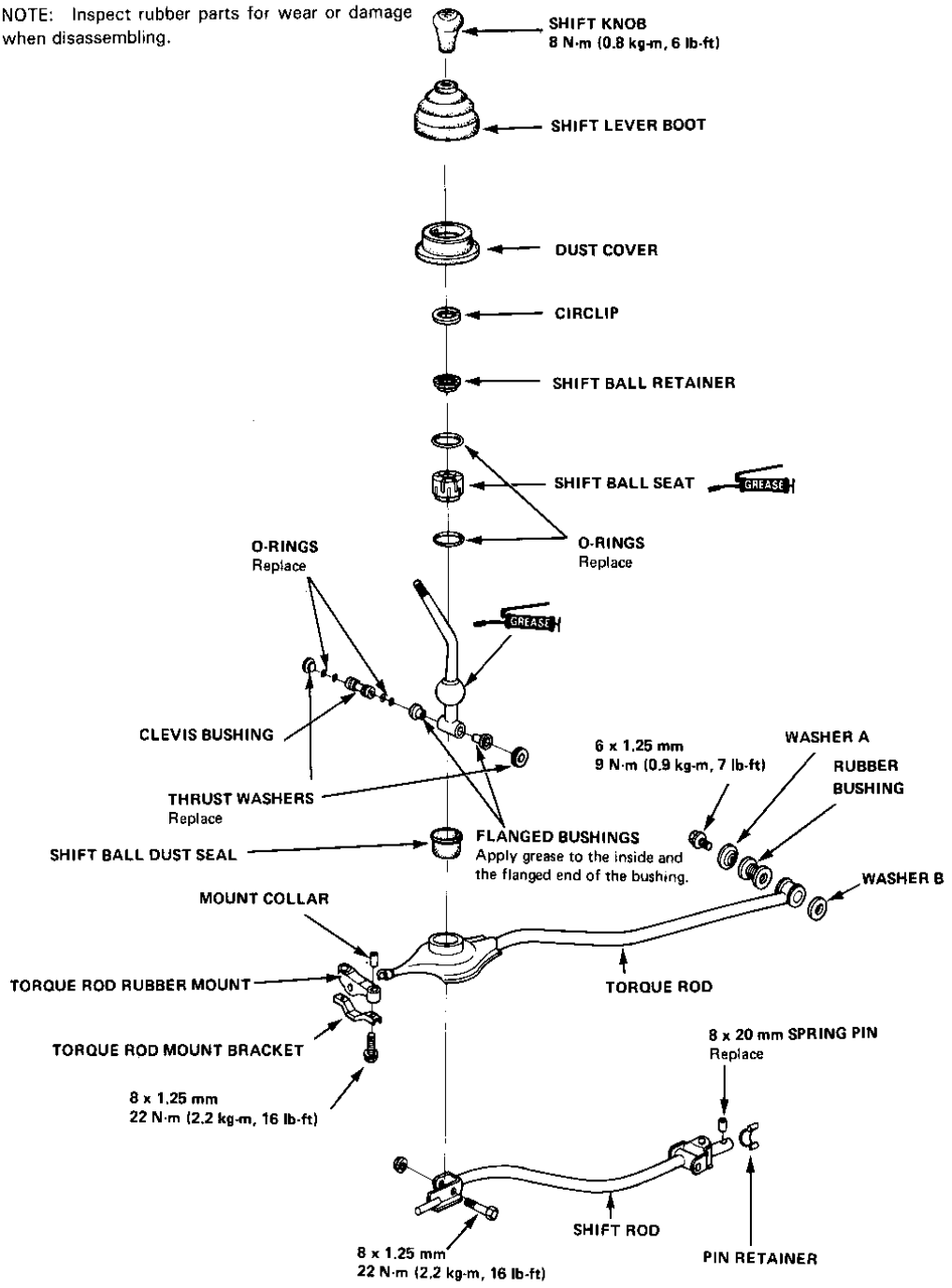

Driveshafts (2WD)

Driveshafts (4WD)

Driveshafts (2WD)

Removal

1. Loosen the front wheel spindle nut with a 32 mm socket wrench.
2. Raise the front end of the car and support it with safety stands (see section 1 for the proper locations for the stands).
3. Drain the transmission oil (section 14, 15 or 16).
4. Remove the front wheel and the spindle nut.
5. Use a floor jack to support the lower control arm, then remove the ball joint cotter pin and nut.

   CAUTION: Make sure that the floor jack is positioned securely under the lower control arm, at the ball joint. Otherwise, torsion bar tension on the lower control arm will cause the arm to jump or spring suddenly away from the hub as the ball joint puller is being used.
6. Separate the ball joint from the front hub with the ball joint puller.
7. Slowly, lower the floor jack to lower the control arm.

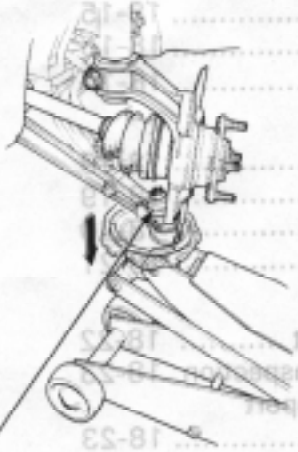

8. Pull the front hub outward, all the way off the driveshaft.

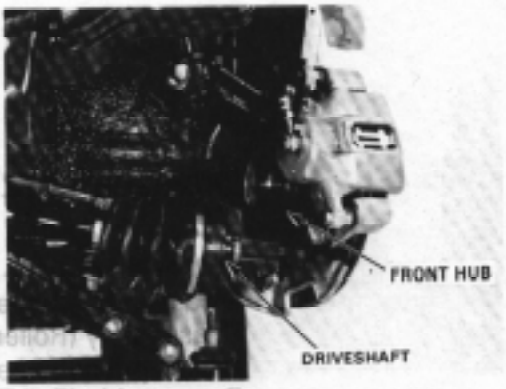

9. Using a tool like the one described below, pry out the inboard CV joint approximately 12 mm (1/2 in) in order to force the spring clip out of the groove in the differential side gears.

   CAUTION:
   - **Pry carefully to avoid damaging the oil seal.**
   - **Do not pull on the inboard CV joint; it may come apart.**
10. Pull the driveshaft out of the transmission case.

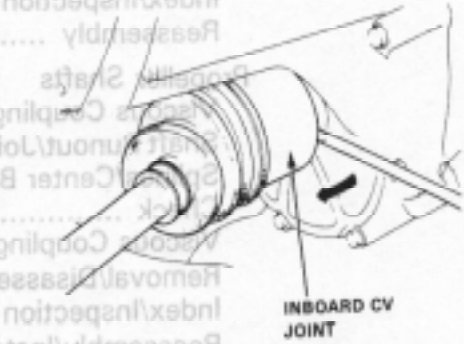

Disassembly/Inspection (Roller Type)

Disassemble in numbered sequence

NOTE: Mark the rollers and roller grooves during disassembly to ensure proper positioning during reassembly.

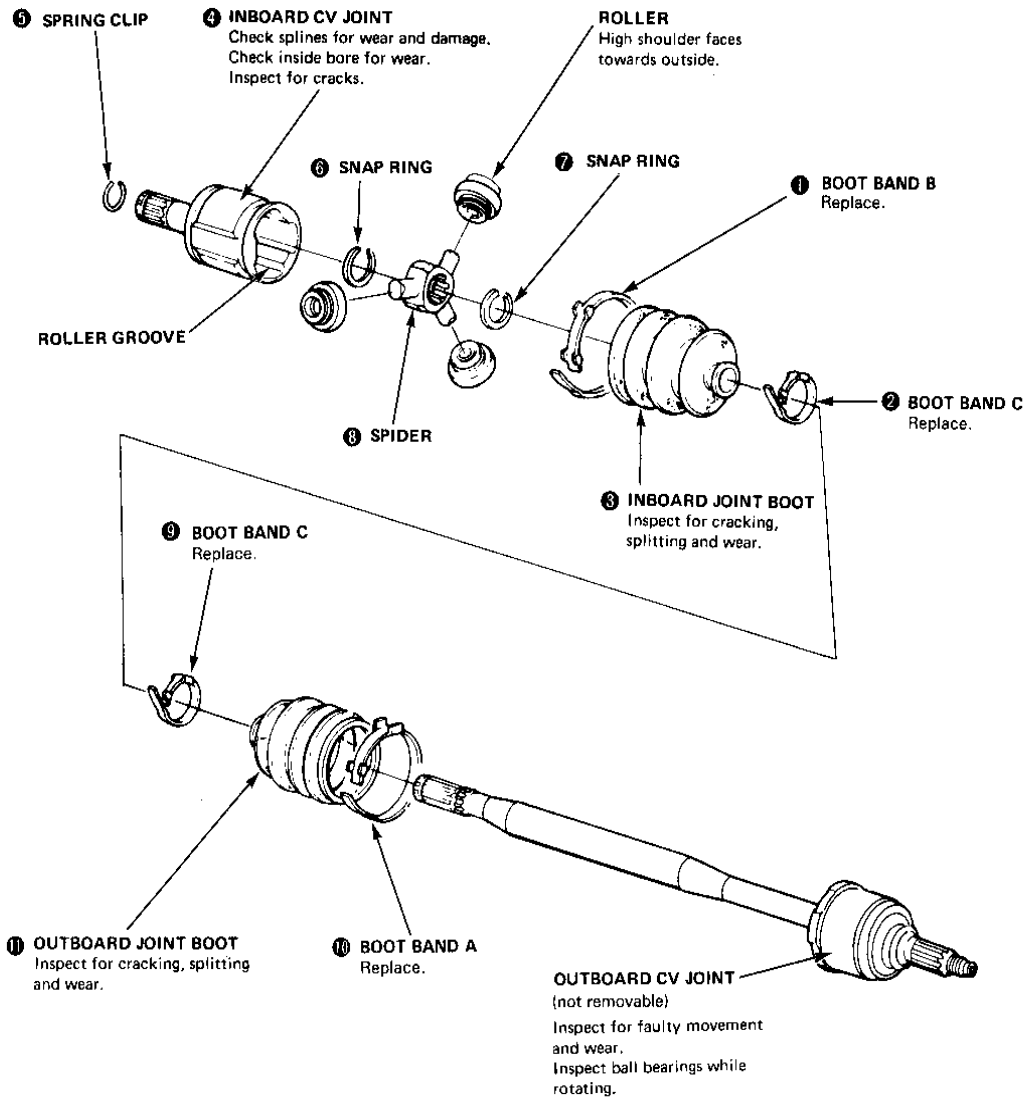

Driveshafts (2WD)

Reassembly (Roller Type)

1. Reassemble the driveshafts in reverse order of disassembly.

   GREASE Thoroughly pack the bearings and both the inboard and outboard CV joints with high quality molybdenum disulfide grease when reassembling the driveshaft.

2. Install the rollers and bearing races on the spider shafts, then slide the spider assembly into the inboard shaft joint.

   CAUTION: Avoid getting oil or grease on the rubber parts.

3. Slide the boots into place and install new boot band C on the small ends.
   Position the bands so they are centered between the locating humps at each end of the driveshaft. Expand and compress the boots until they return to their normal shape and length.

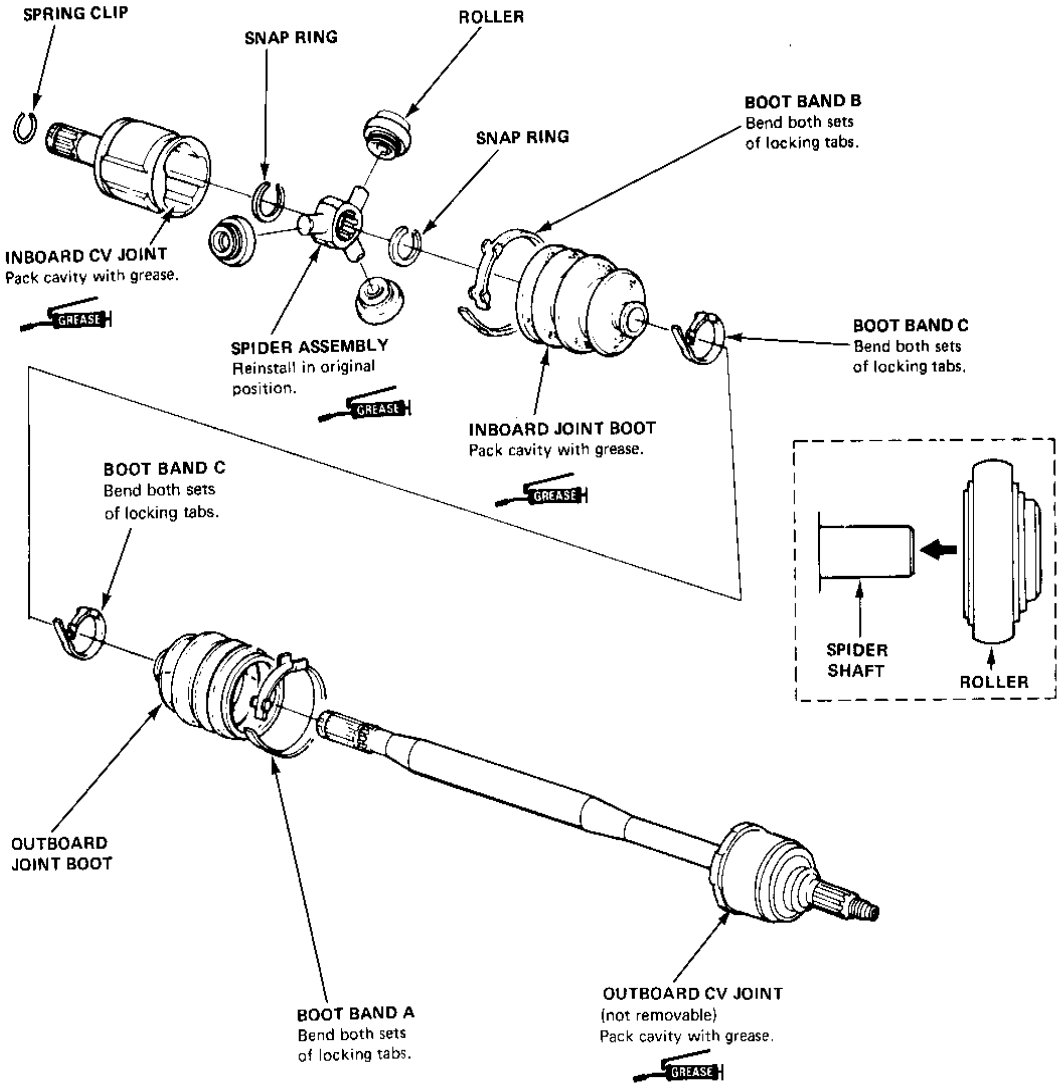

Disassembly/Inspection (Ball type)

Disassemble in numbered sequence.

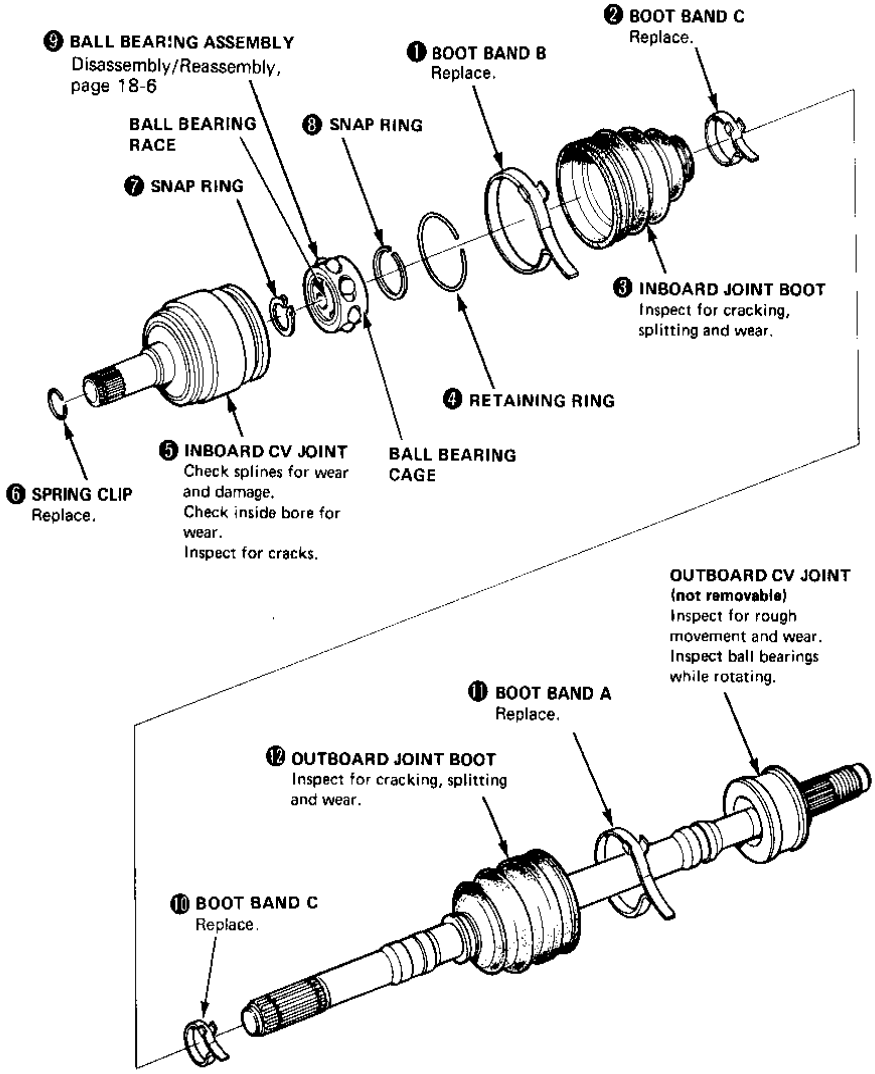

Driveshafts (2WD)

Bearing Disassembly (Ball Type)

1. To inspect the inboard CV joint bearing, put it on a bench and disassemble it by gently prying each ball out of the cage with a dull screwdriver.

   NOTE: Individual parts for CV joints are not available. The inboard joint is available as a complete assembly; the outboard joint is available only as part of the complete axle assembly.

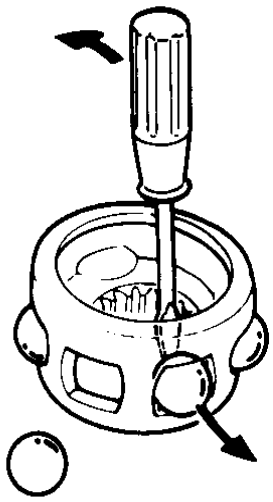

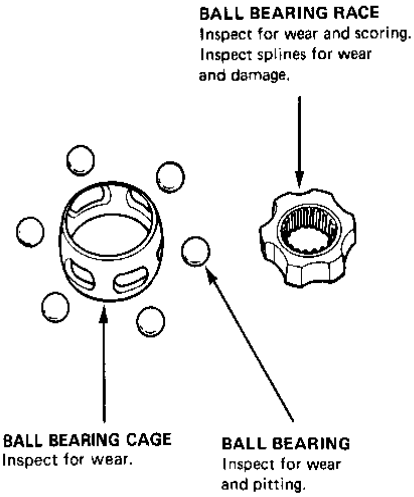

Bearing Reassembly (Ball Type)

1. Install the ball bearing race with chamfered end towards small end of cage.

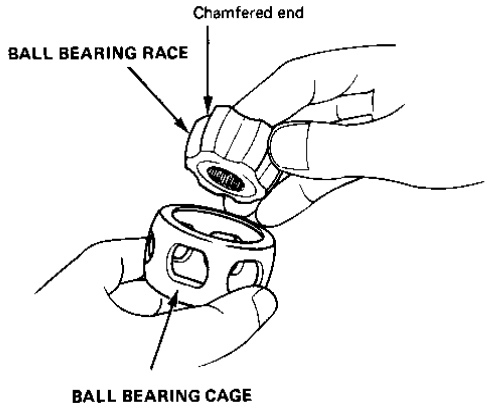

2. Press the balls in untill firmly seated.

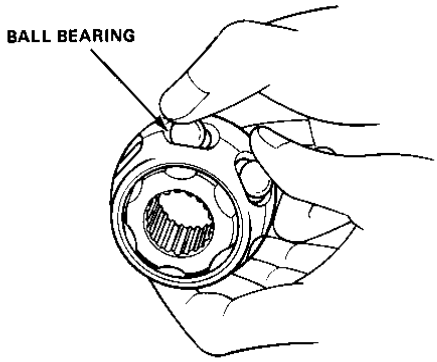

Reassembly (Ball type)

1. Reassemble the driveshafts in reverse order of disassembly.

   GREASE Throughly pack bearings and both inboard and outboard CV joints with high quality molybdenum disulfide grease when reassembling the driveshaft.

2. Slide the boots into place and install new bands C on the small ends.
   Position the bands so they are centered between locating humps at each end of the driveshaft. Expand and compress the boots until they return to their normal shape and length.

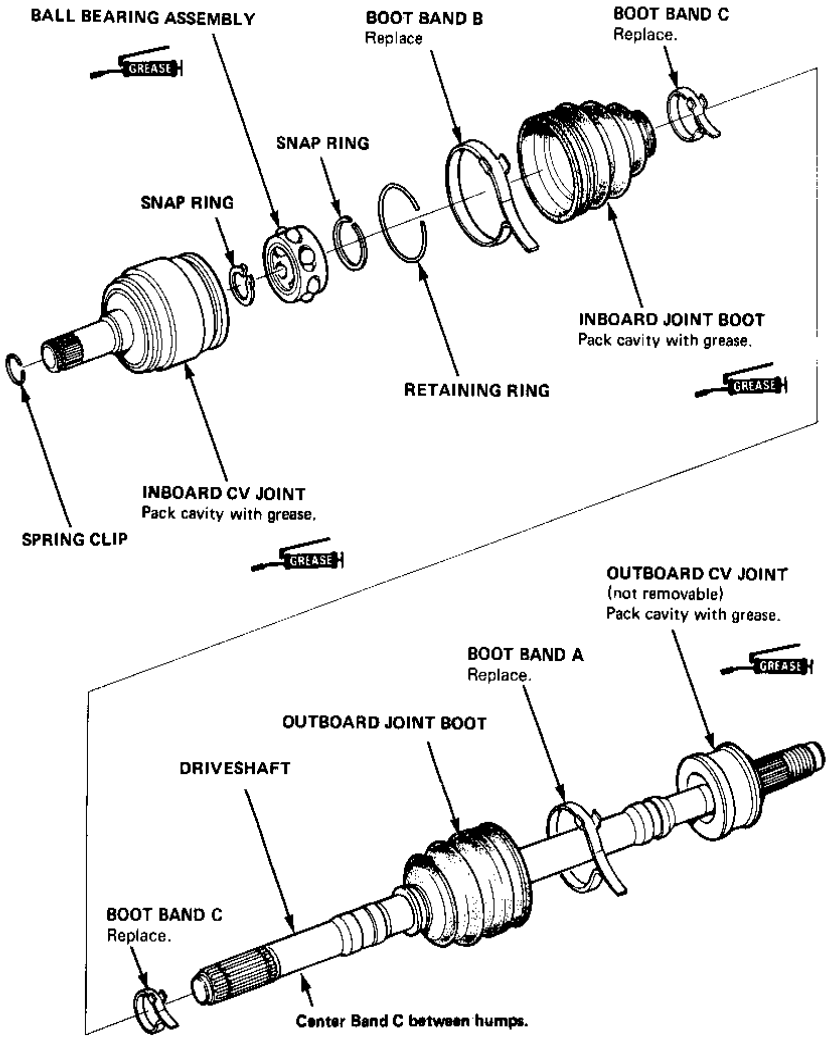

Driveshafts (2WD)

Installation

1. Adjust the length of the driveshafts to the figures given below.

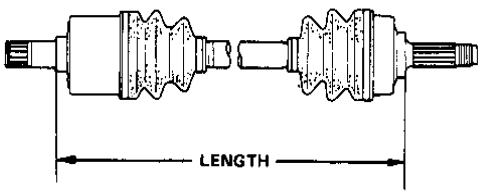

LEFT DRIVESHAFT:
771.0—776.0 mm (30.4—30.6 in)
RIGHT DRIVESHAFT:
471.0—476.0 mm (18.5—18.7 in)

2. Install the new boot bands A, B and C on the boots.

NOTE:
- Be sure to bend both sets of the locking tabs.
- Lightly tap on the doubled-over portions to reduce their height.

CAUTION: Do not strike the boot.

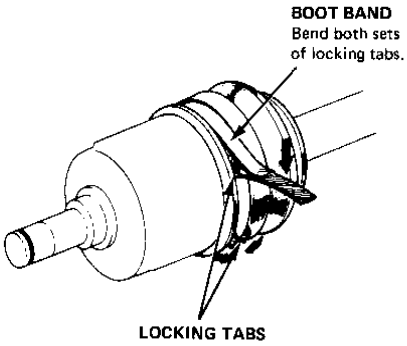

3. Install a new spring clip in the groove of the CV joint subaxle.

4. Install the inboard end of the driveshaft into the differential.

CAUTION:
- **When reinstalling, make sure that the CV joint subaxle bottoms in the differential and that the spring clip locks in differential side gear groove.**
- **Replace the spring clip with a new one whenever the driveshaft is disassembled.**

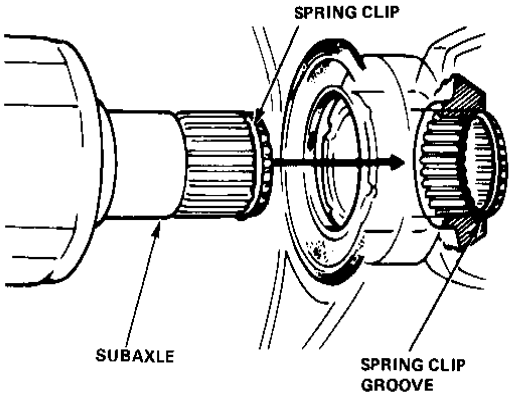

5. Add the transmission oil.
Use only SAE30, 10W-30, 10W-40 or 20W-40 weight oil, grade SE or SF.

Suspension

Suspension

Index

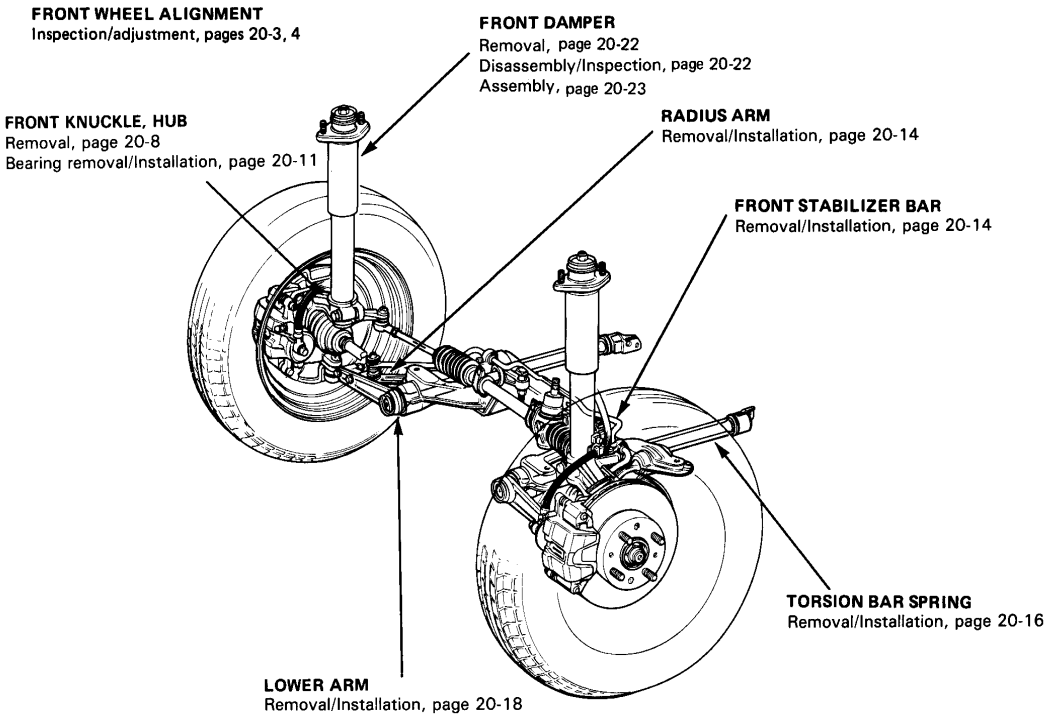

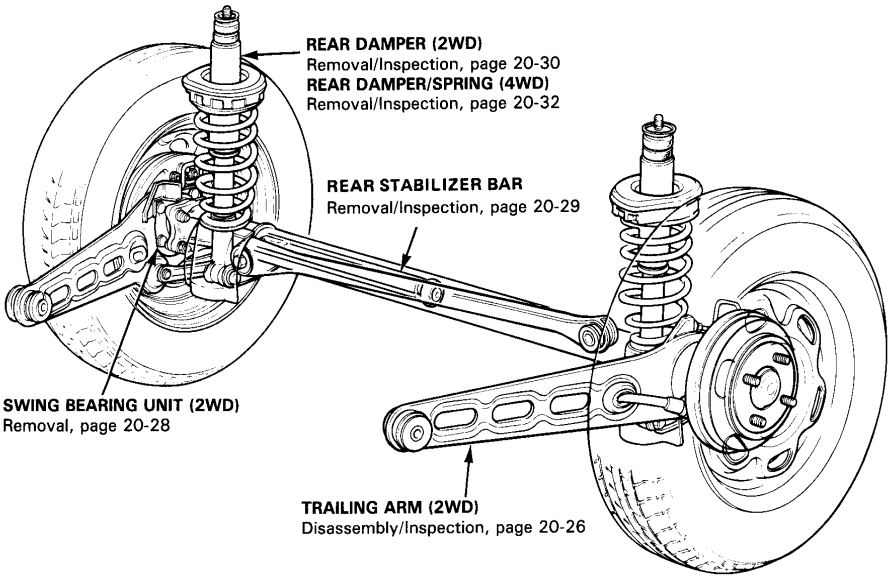

2WD shown

Wheel Alignment

Front Toe Adjustent

1. Center steering wheel spokes.

   NOTE: Measure difference in toe measurements with the wheels pointed straight ahead.

   Front Toe: 0 ± 3 mm (0 ± 0.118)

   — If adjustment is required, go on to step 2.
   — If no adjustment is required, remove alignment equipment.

2. Loosen the tie-rod locknuts and turn both tie-rods in the same direction until the front wheels are in straight ahead position.

3. Turn both tie-rods equally until the toe reading is correct.

4. After adjusting, tighten the tie-rod locknuts.

   NOTE: Make sure the tie-rod boots are not twisted or otherwise displaced after adjustment.

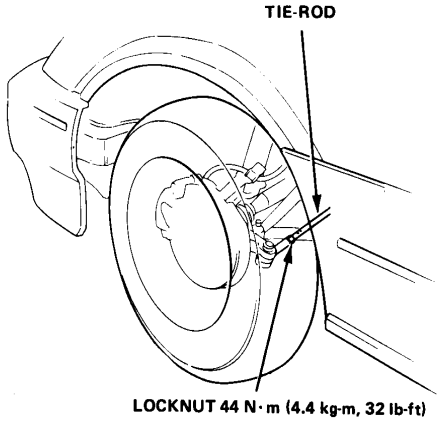

Rear Toe Inspection

1. Release parking brake.

   NOTE: If the parking brake is engaged, you may get an incorrect reading.

   Rear toe in: 2 ± 2 mm (0.079 ± 0.079)

   NOTE: Rear wheel toe is not adjustable. If out of specification, check suspension for damage and replace parts as necessary, then recheck alignment.

Camber Inspection

1. With the wheels in a straight ahead position, remove the spindle nut and install the special tool on the spindle as shown.

2. Set up the camber/caster gauge.

3. Read the camber on the gauge with the bubble at the center of the gauge.

   Front Camber : 0° ± 1°
   Rear Camber : − 3/4 ± 1/4°

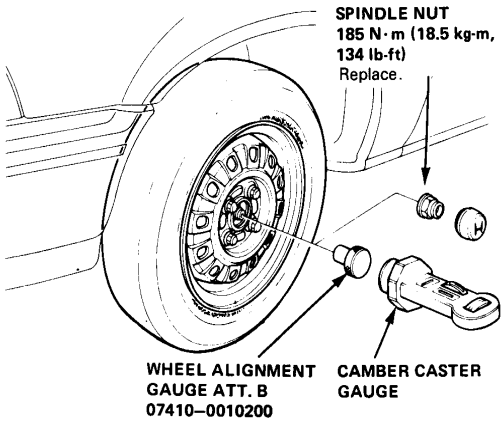

NOTE:
- If your alignment equipment must be mounted at axle centerline, use Honda front and rear wheel alignment attachments as shown.
- Camber is not adjustable. If out of specification, check suspension for damage and replace parts as necessary, then recheck alignment.

Wheel Alignment

Caster Inspection

1. Jack up the front of the car and set the turning radius gauges beneath the front wheels, then lower the car.
2. Remove the spindle nut and install Wheel Alignment Gauge Attachment.
3. Install Camber/Caster Gauge on the Attachment and apply the front brake. Turn the wheel 20° inward.
4. Turn the adjust screw so that the bubble in the caster gauge is at 0°. Return the wheel to the straight ahead position.

Caster angle:
Wagon : 2° ± 1°
Sedan with Power Steering : 2-1/2° ± 1°
Others : 3° ± 1°

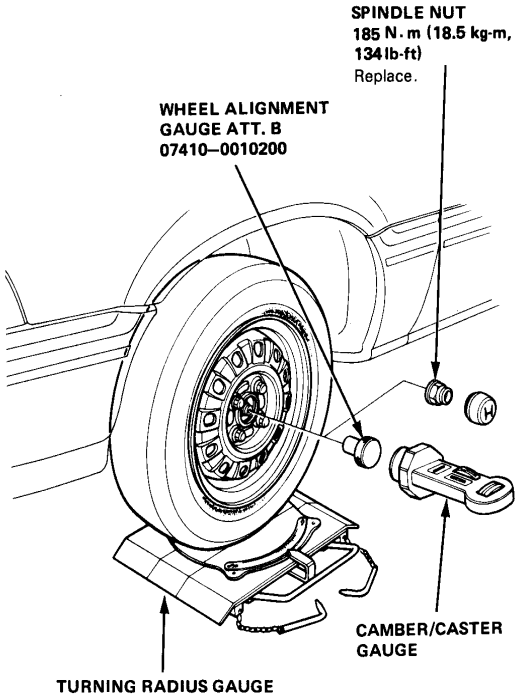

NOTE:
- If your alignment equipment must be mounted at axle centerline, use Honda front and rear wheel alignment attachments as shown.
- Caster is not adjustable. If out of specification, check suspension for damage and replace parts as necessary, then recheck alignment.

Spring Height

Inspection

NOTE:
- The car must not be occupied; the tires must be properly inflated and in good condition (i.e., the tread wear indicators must not be showing); and the fuel tank must be full.
- Bounce the front or rear of the car up and down several times before measuring.

Front

1. Measure the torsion bar spring height between the ground and the wheel arch.

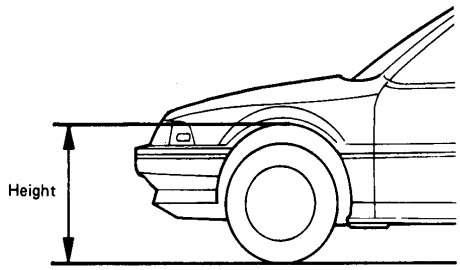

	Standard
Hatchback	646 ± 15 mm (25.43 ± 0.59 in.)
Sedan	651 ± 15 mm (25.63 ± 0.59 in.)
Wagon	649 ± 15 mm (25.55 ± 0.59 in.)

2. Adjust the height if the reading is not within specifications (page 20-5).

Rear

1. Measure the rear coil spring height between the ground and the wheel arch.

	Standard (New)	Service Limit
Hatchback	652 mm (25.67 in)	637 mm (25.08 in)
Sedan	644 mm (25.67 in)	629 mm (24.76 in)
Wagon	656 mm (25.83 in)	641 mm (25.24 in)

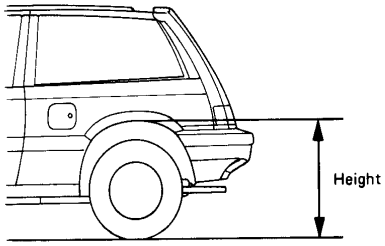

2. Rear spring height is not adjustable. If out of specification replace coil spring.

Torsion Bar Adjustment

1. Raise the front wheels off the ground.
2. Adjust the height by turning the height adjusting nut.

Height adjusting nut	Height
Tighten (Turned right)	Up
Loosen (Turned left)	Down

Height varies 5 mm (0.20 in) per turn of the adjusting nut.

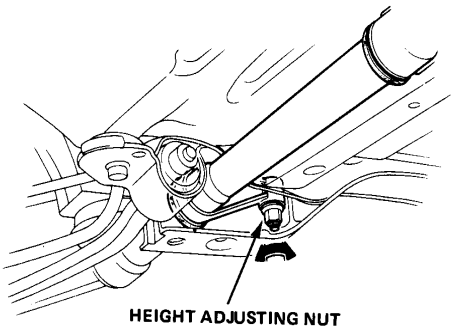

3. Lower the front wheels to the ground, push the car up and down and back and forth several times, then confirm that the spring height is within specifications.

Wheel Measurement

Bearing End Play

Front Wheel End Play

Standard: 0—0.05 mm (0—0.002 in.)

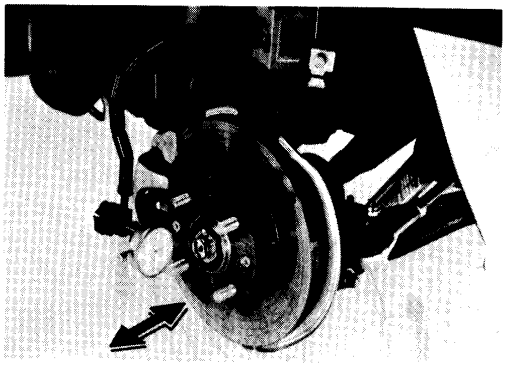

Rear Wheel End Play

Standard: 0—0.05 mm (0.002 in)

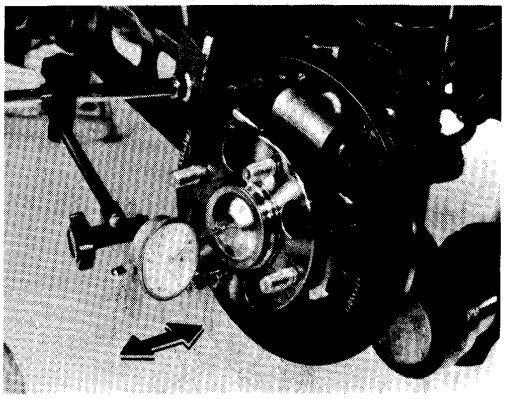

Wheel Measurement

Runout

Front and Rear Wheel Axial Runout

Standard: Steel— 0—1.0 mm (0.039 in.)
Aluminum— 0—0.7 mm (0.028 in.)

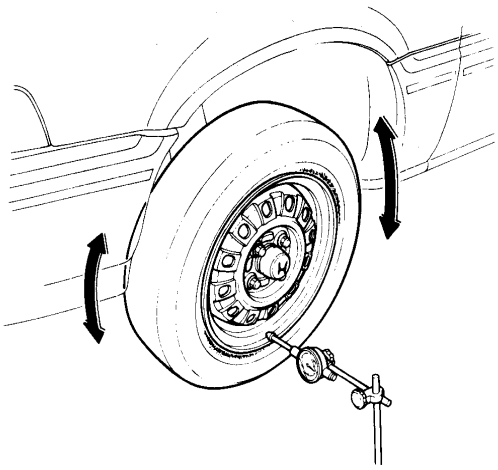

Front and Rear Wheel Radial Runout

Standard: Steel— 0—1.0 mm (0.039 in.)
Aluminum— 0—0.7 mm (0.028 in.)

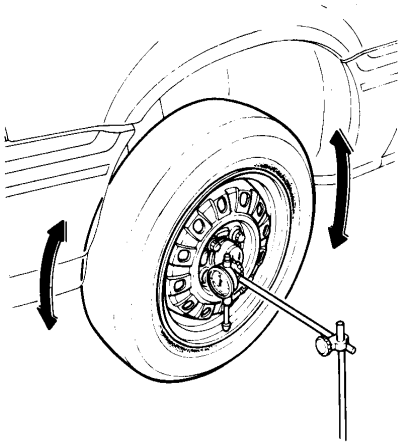

Front Suspension

Index

NOTE: Replace the self-locking bolts if you can easily thread a nut past their nylon locking inserts.

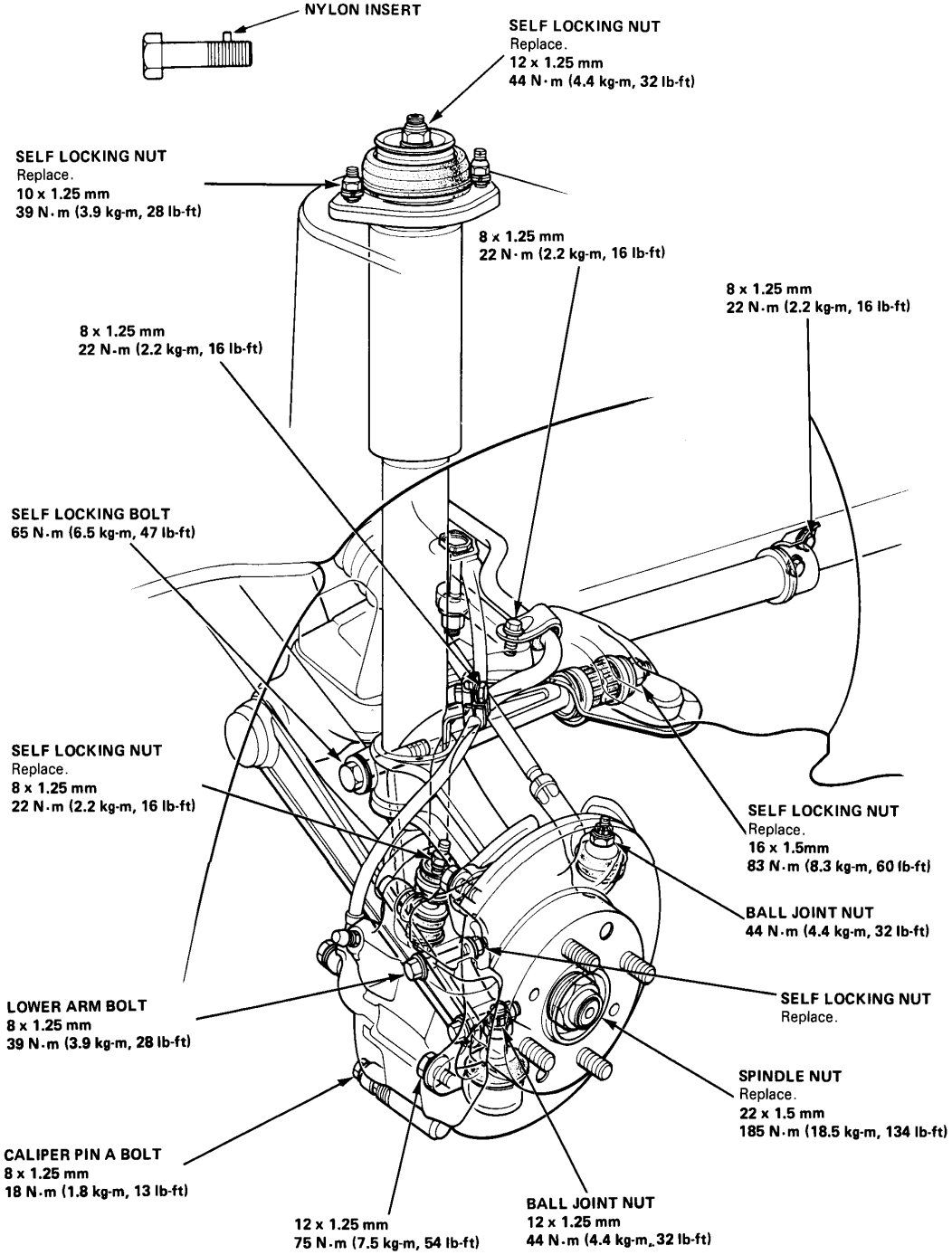

Knuckle/Hub

Index

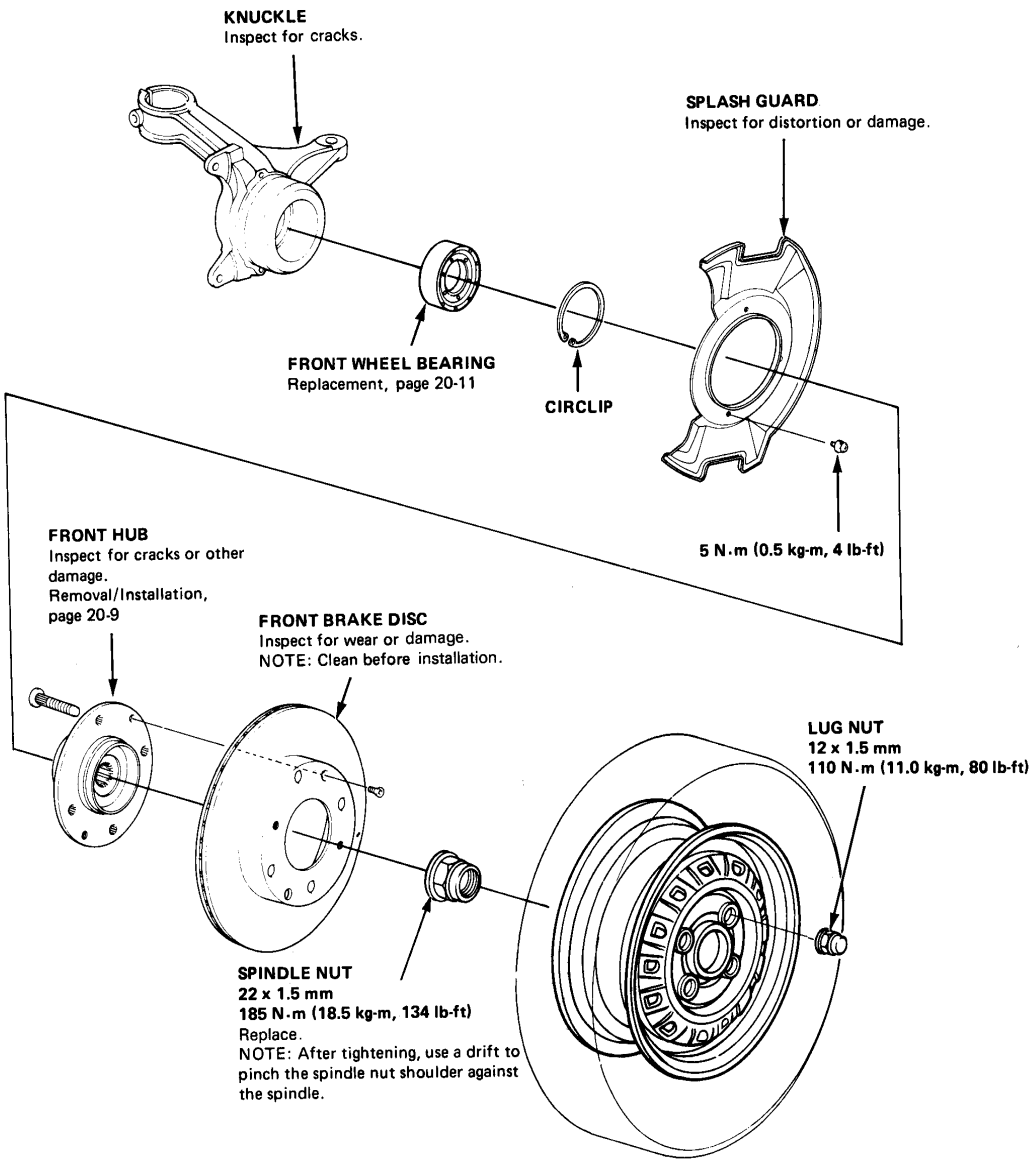

Replacement

1. Pry the spindle nut lock tab away from the spindle, then loosen the nut using a 32 mm socket.

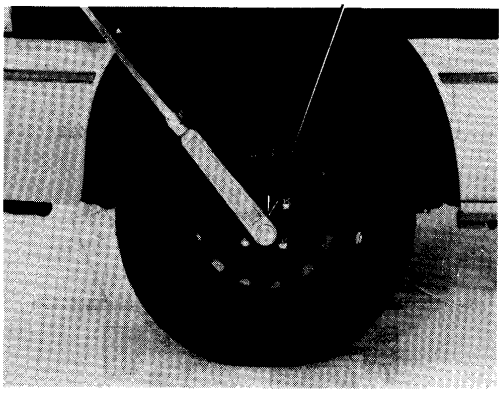

2. Loosen the lug nuts slightly.
3. Raise the front of car and support with safety stands in the proper locations.
4. Remove the lug nuts, wheel, and spindle nut.
5. Remove the caliper mounting bolts and hang the caliper assembly to one side.

   CAUTION: To prevent accidental damage to the caliper assembly or brake hose, use a short piece of wire to hang the caliper assembly from the under-carriage.

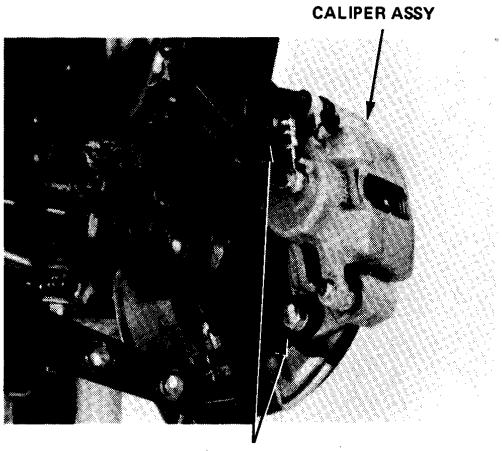

6. Remove the 6 mm brake disc retaining screws.
7. Screw two 8 x 1.25 x 12 mm bolts into the disc to push it away from the hub.

   NOTE: Turn each bolt two turns at a time to prevent cocking disc excessively.

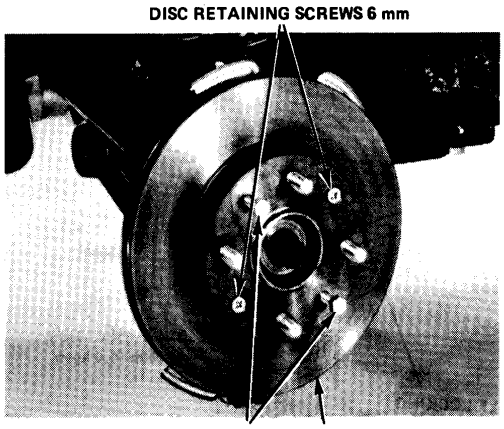

8. Remove the cotter pin from the tie-rod castle nut then remove the nut.
9. Break loose the tie-rod ball joint using Ball Joint Remover, then lift the tie-rod out of the knuckle.

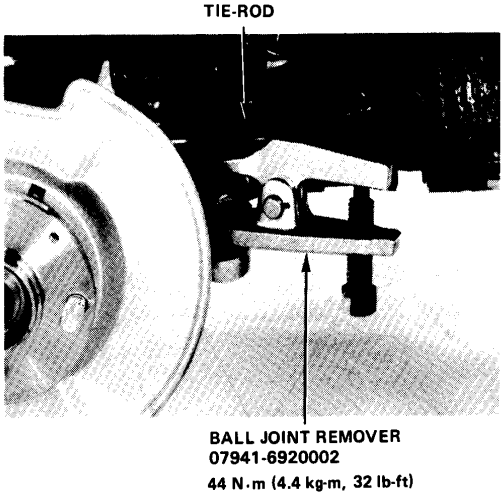

(cont'd)

Knuckle/Hub

Replacement (cont'd)

10. Use a floor jack to support the lower control arm, then remove the ball joint cotter pin and nut.

    CAUTION: Make sure the floor jack is positioned securely under the lower control arm, at the ball joint. Otherwise, torsion bar tension on the lower control arm may cause the arm to "jump" suddenly away from the steering knuckle as the ball joint is being removed.

11. Pry the ball joint out of the steering knuckle. If necessary use the ball joint remover.

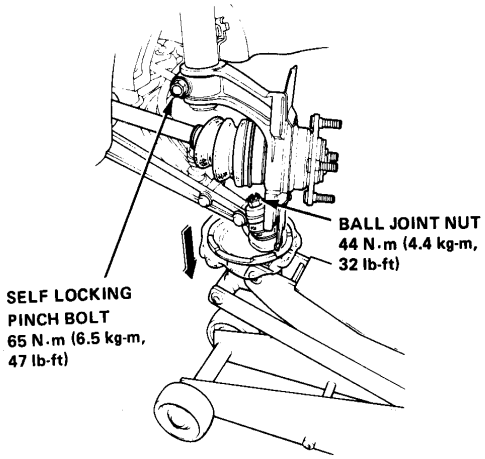

12. Remove the self locking pinch bolt, then use a brass or lead hammer to tap the knuckle down until it clears the damper.

13. Pull the driveshaft out of the knuckle, then remove the hub/knuckle assembly.

14. Remove the two screws holding the splash guard on the steering knuckle.

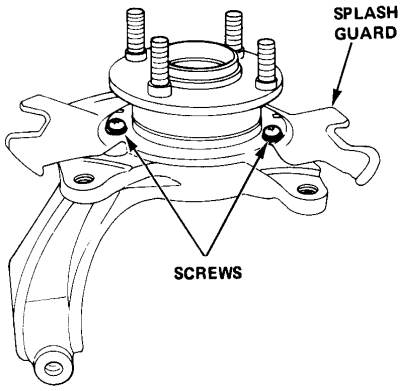

15. Remove the hub from the knuckle with a hydraulic press and the special tools shown below.

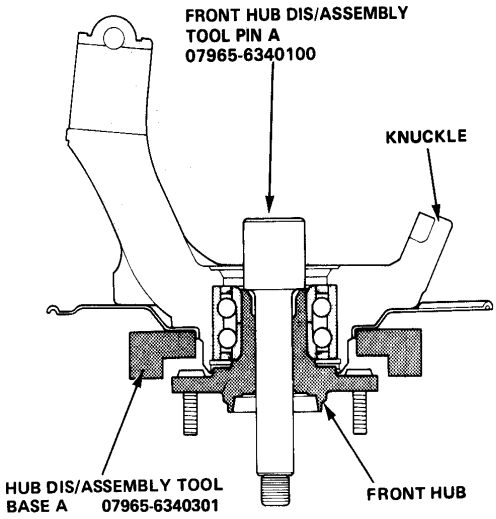

CAUTION:
- **Make sure the knuckle is securely mounted on the base.**
- **Take care not to distort the splash guard.**
- **Support the hub by hand to prevent it from falling.**

Bearing Removal

1. Remove the circlip.
2. Remove the bearing from the steering knuckle with the hydraulic press and special tools shown below.

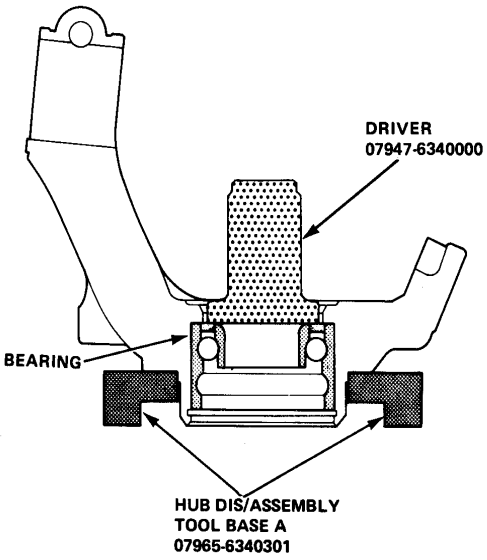

3. Remove the outboard bearing inner race from the hub with the special tool and a bearing remover.

   NOTE: Wash the knuckle and hub thoroughly before reassembly.

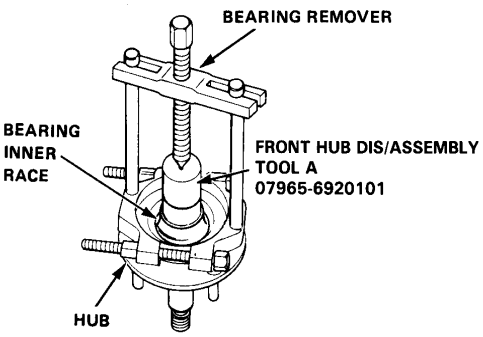

Knuckle/hub Reassembly

1. Press the bearing assy into the knuckle using a hydraulic press and the special tools shown below.

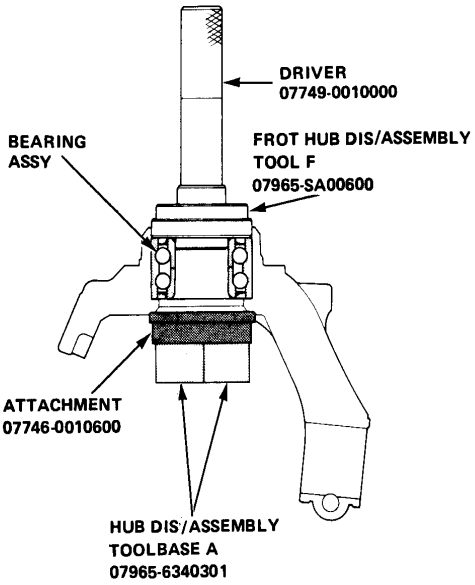

2. Install the circlip.
3. Install the splash guard.
4. Press the front hub into the knuckle with a hydraulic press and the special tools shown below.

   CAUTION: Maximum press load: 2.0 tons

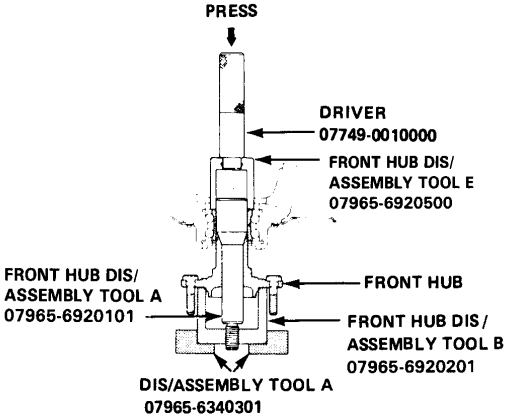

Lower Arm/Radius Arm/Stabilizer/Torsion Bar

Index

- **2WD**

NOTE:
- Replace self-locking nuts after removal.
- Inspect all bushings and rubber parts for wear or damage.

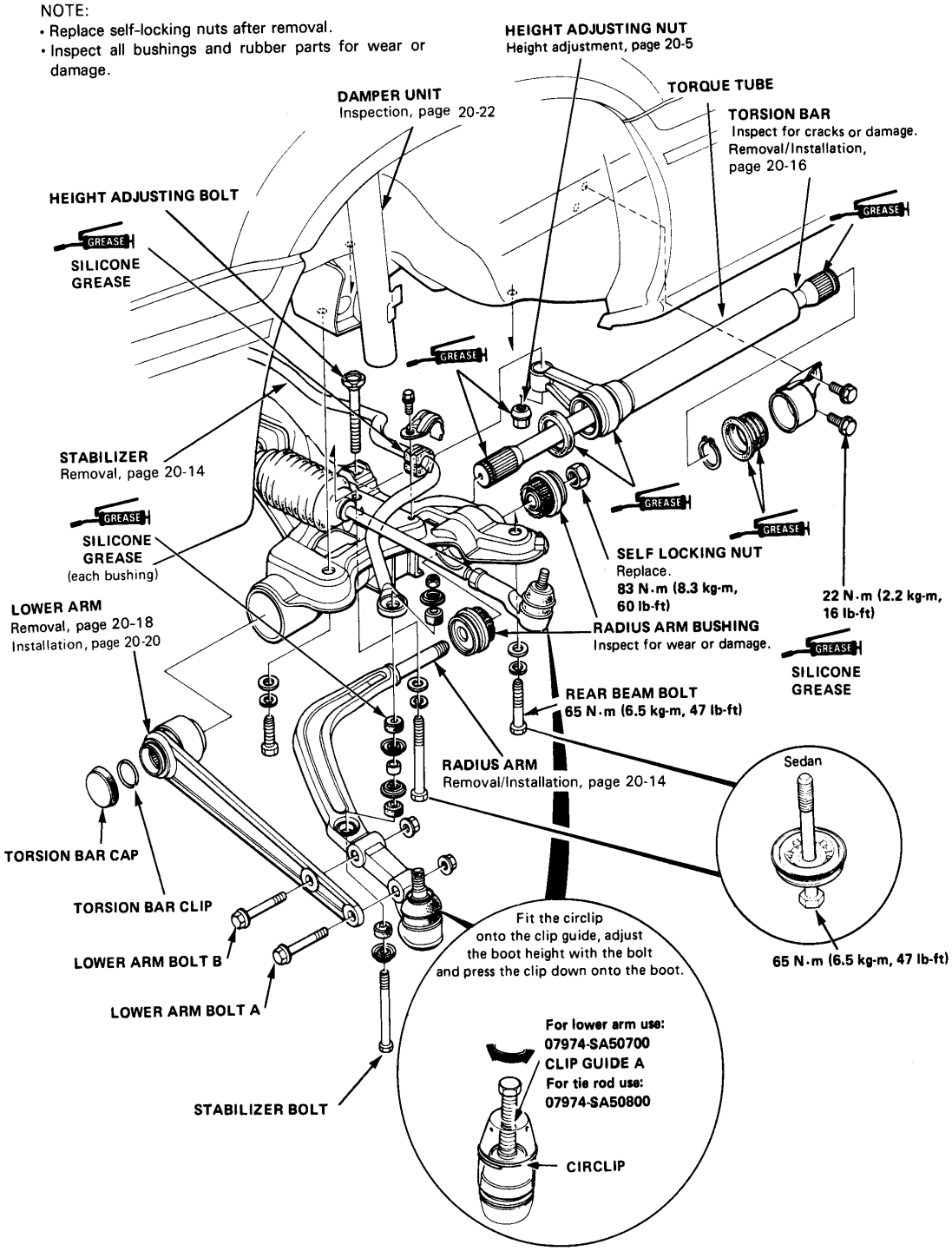

- **4WD**

NOTE:
- Replace the self-locking nuts.
- Inspect the rubber bushings for damage or deterioration.

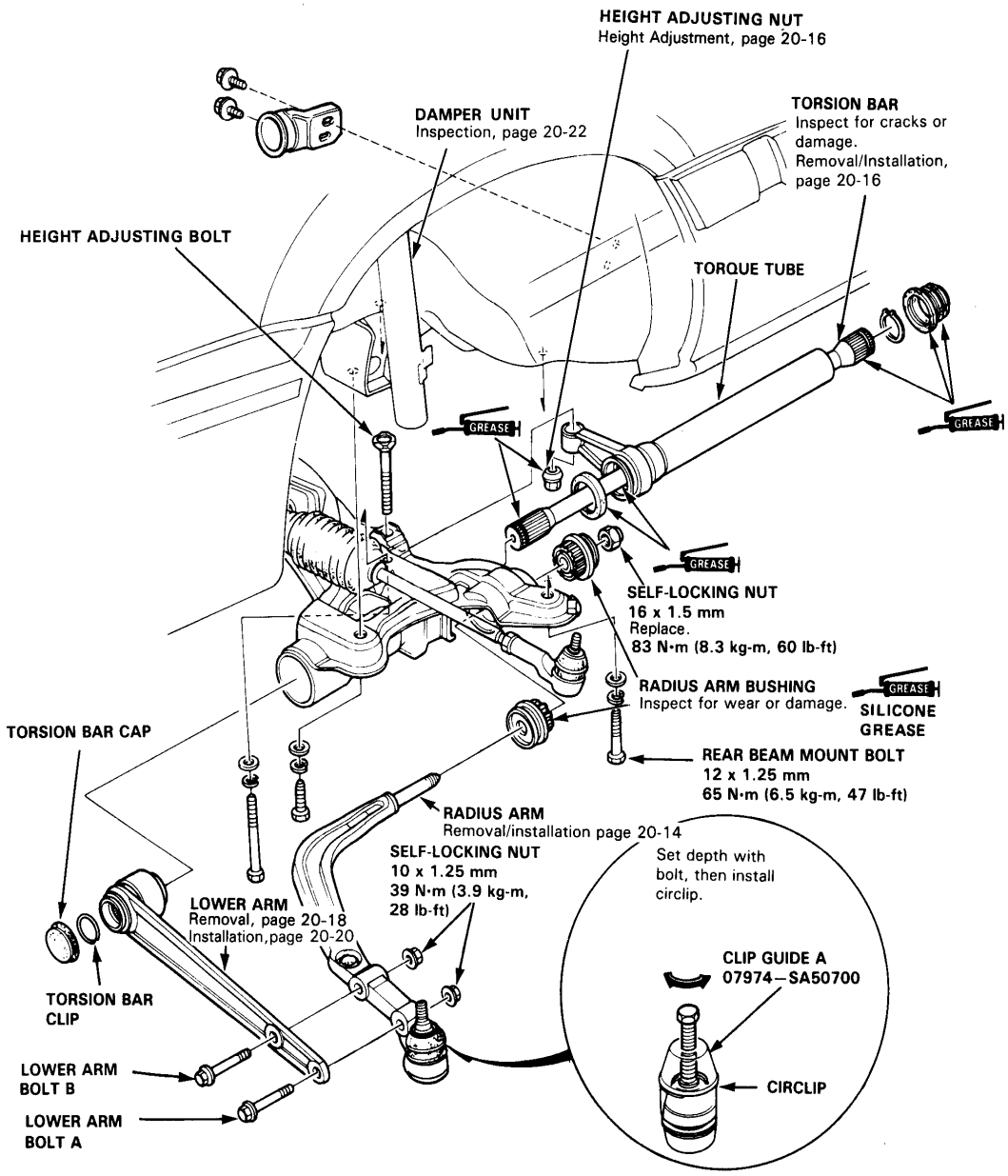

Radius Arm

Removal/Installation

1. Raise the front of the car off the ground and support it with safety stands (see section 1 for the proper location of the safety stands).
2. Remove the front wheels.
3. Remove the radius arm ball joint from the knuckle. (page 20-10)

   CAUTION: Make sure the floor jack is positioned securely under the lower control arm at the ball joint. Otherwise, torsion bar tension on the lower control arm may cause the arm to "jump" suddenly away from the steering knuckle as the ball joint is being removed.

4. Remove the radius arm self locking nuts.

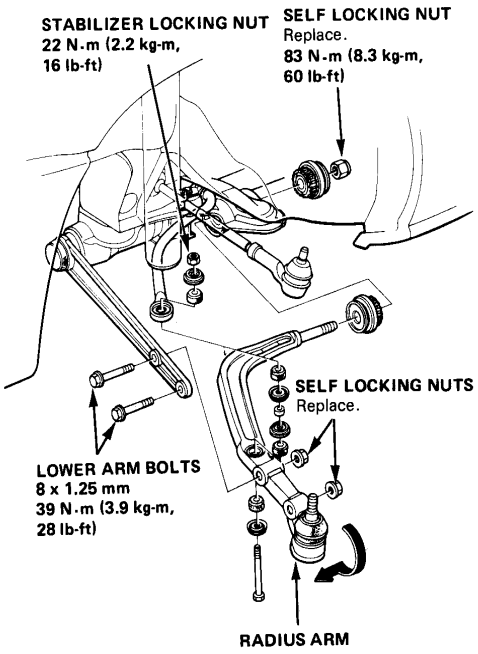

5. Remove the stabilizer locking nut and separate the radius arm from the stabilizer spring.
6. Remove the lower arm bolts.
7. Remove the radius arm by pulling it down and then forward.
8. Installation is the reverse order of removal.

   CAUTION: Tighten all bushings and rubber dampered parts only after the car is back on the ground.

Stabilizer

Removal

1. Raise the front of the car off the ground and support it with safety stands (see section 1 for the proper location of the safety stands).
2. Remove the front wheels.
3. Support the weight of the engine with a chain hoist or similar device.
4. Remove the steering gearbox (section 19).
5. Separate the radius arm ball joint from the knuckle (page 20-10).

   CAUTION: Make sure the floor jack is positioned securely under the lower control arm at the ball joint. Otherwise, torsion bar tension on the lower control arm may cause the arm to "jump" suddenly away from the steering knuckle as the ball joint is being removed.

6. Remove the torque tube holder.
7. Remove exhaust pipes A and B (section 9).
8. Manual Transmission:
   Disconnect the shift rod and extension from the transmission (section 19).
   Automatic Transmission:
   Remove the shift cable guide from the floor and pull the shift cable down by hand.
9. Remove the engine mount bracket nuts.
10. Pry off the rear beam by placing a jack at the center and removing the six 12 mm bolts.

    CAUTION: Take care not to drop the rear beam assembly.

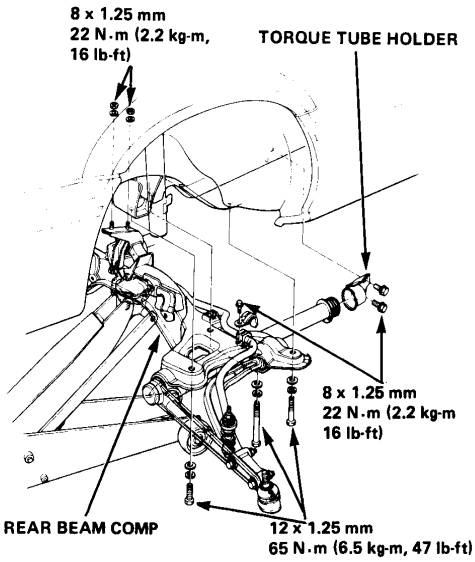

11. Remove the stabilizer bracket and bolt, and then remove the stabilizer spring.
12. Remove the rear mounting bracket.

Sub Frame Mount/Lower Bushing (Sedan)

Installation

Whenever the rear beam is replaced, the rear beam lower bushing C and sub frame mounts A and B must be replaced.

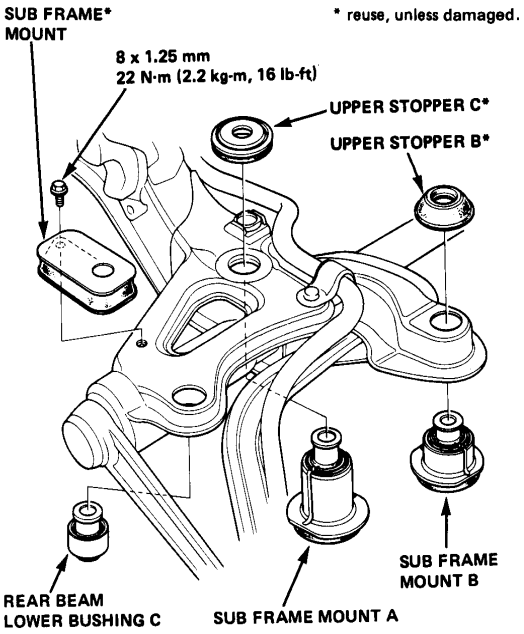

- Lower bushing C

  Press a new bushing into the replacement rear beam until the outer edge is flush with the end of the rear beam.

Press-fit load:
500–1,000 kg (1,102–2,205 lb)

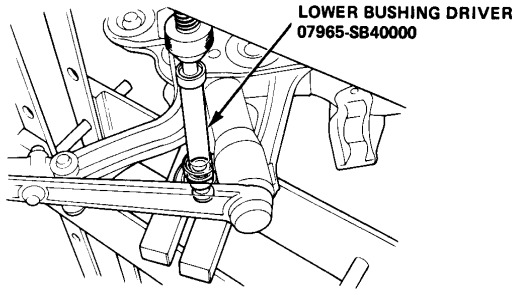

- Sub frame mounts A and B

  Drive new mounts into place in the rear beam with the splits in the mounts positioned as shown.

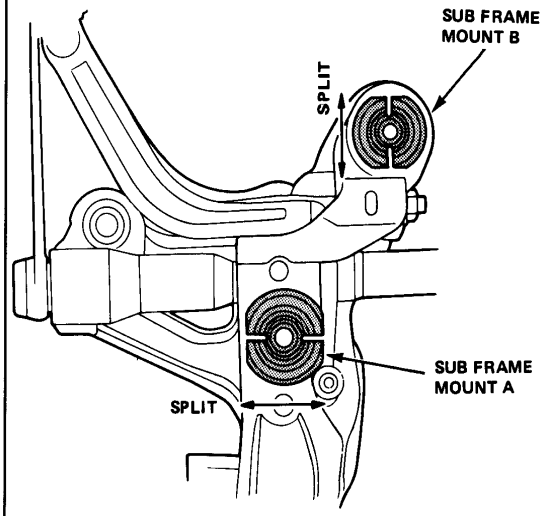

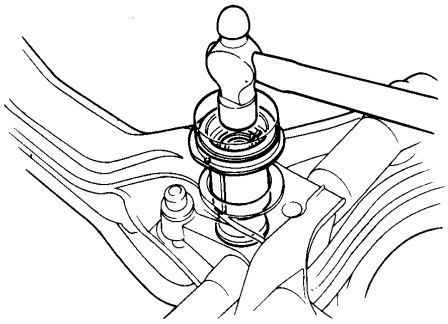

NOTE: Be sure to use a suitable pad when driving the new mounts into the rear beam as shown.

Torsion Bar Assembly

Removal/Installation

1. Jack up the front of the car and support it with safety stands (see section 1 for the proper location of safety stands).
2. Remove the height adjusting nut.
3. Remove the torque tube holder.
4. Remove the 30 mm circlip.
5. Remove the torsion bar cap and then remove the torsion bar clip by tapping the torsion bar forward out of the torque tube.

   NOTE: Move the lower arm up and down to make the torsion bar slide easier.

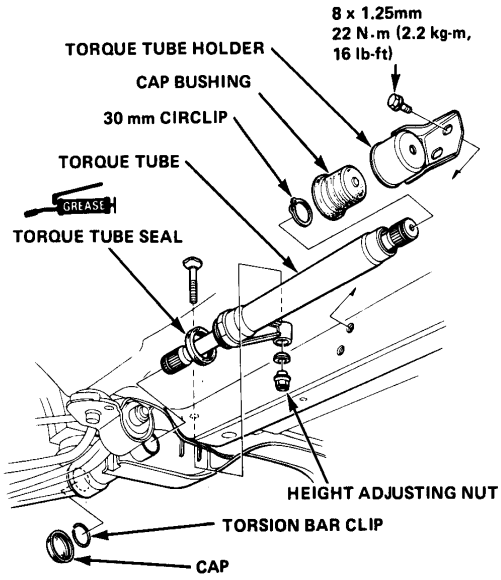

6. Tap the torsion bar backward, out of the torque tube.
7. Remove the torque tube.
8. Inspect the torsion bar for cracks or damage.
9. Install a new torque tube seal onto the torque tube.
10. Coat the torque tube seal and the torque tube sliding surface with grease, then install the torque tube on the rear beam.

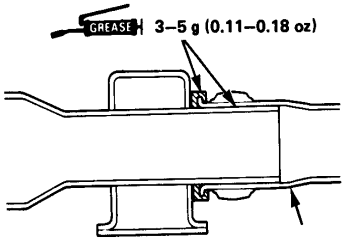

11. Grease the splines at each end of the torsion bar.

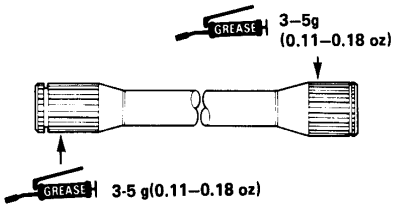

12. Insert the torsion bar into the torque tube from the back.
13. Align the projection or punch mark on the torque tube splines with the cutout or paint mark in the torsion bar splines and insert the torsion bar approximately 10 mm (0.394 in).

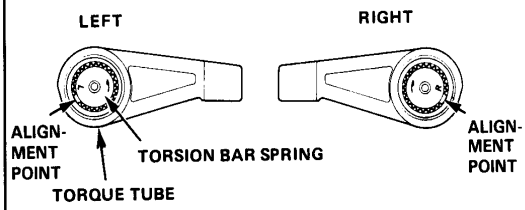

NOTE:
- Move the lower arm up and down for easier installation.
- There are two types of torsion bars and torque tube; torque tubes with and without raised lugs and torsion bars with and without lug reliefs. The torque tube with the raised lug will not fit over a torsion bar without a lug relief. But all other combinations of torque tube and torsion bar will fit together and work properly.

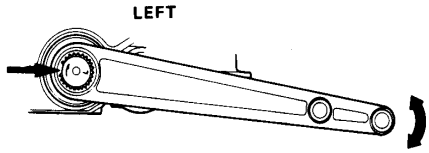

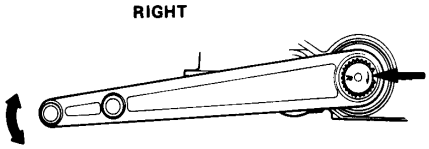

14. Align the projection in the lower arm splines with the cutout in the torsion bar splines and push the torsion bar in until the torsion bar clip can be installed.

15. Install the clip on the torsion bar, and the cap over it.

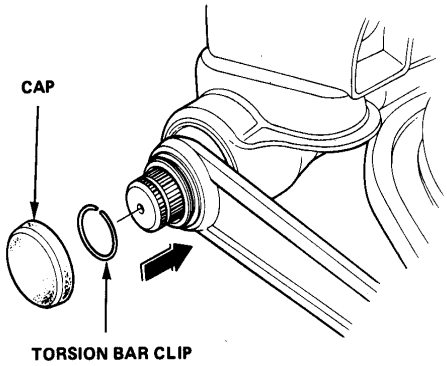

16. Install the 30 mm circlip on the back of torsion bar.

NOTE: Push the torsion bar forward so that there is no clearance between the 30 mm circlip and the torque tube.

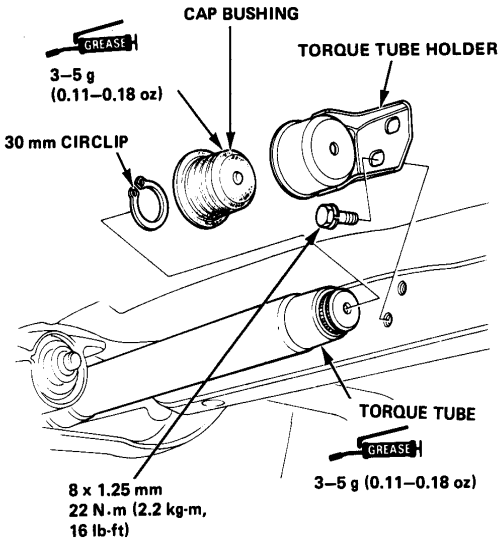

17. Coat the cap bushing with grease and install it on the torque tube.

18. Install the torque tube holder.

19. Tighten the height adjusting nut temporarily.

NOTE: Coat the height adjusting nut and the torque tube sliding surface with grease.

20. Set the car on the ground and adjust the torsion bar spring height. (Page 20-5)

Lower Arm

Removal

1. Jack up the front of the car and support it with safety stands in the proper locations (see section 1).

2. Remove the height adjusting nut, torque tube holder, bushing, and 30 mm circlip.

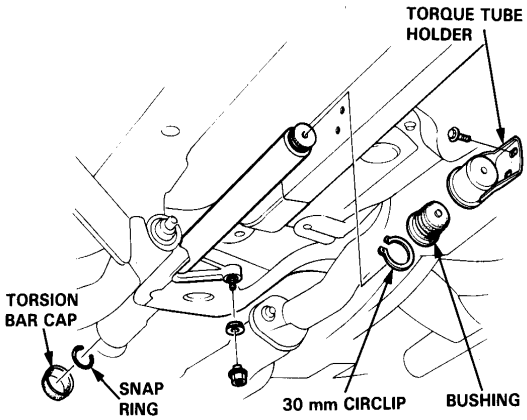

3. Remove the torsion bar cap, then tap the torsion bar forward to gain access to its snap ring. Remove the snap ring.

4. Remove the torsion bar by tapping it backwards out of the torque tube.

5. Remove the torque tube.

6. Remove the bolts and nuts that secure the lower arm to the radius arm.

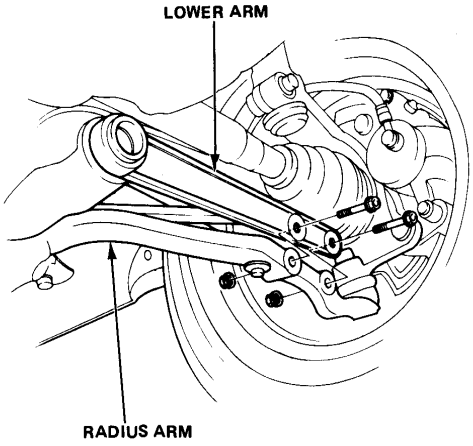

7. Raise the engine, as necessary, for access to the lower arm.

   - If you're replacing the left side, you'll need to remove the alternator adjustor bolt, then push the alternator up against the block. Now, raise the engine and insert the engine mount spacer into the mount; this will raise the oil pan clear of the left lower arm.

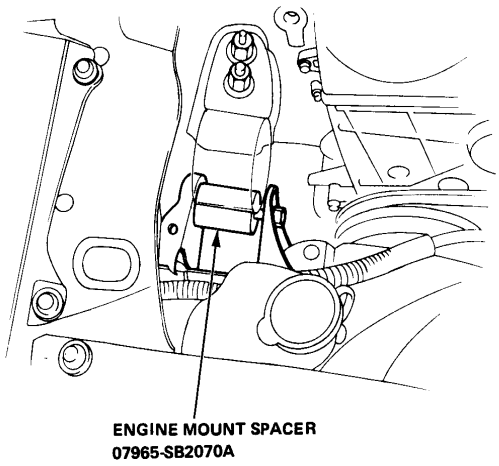

   - If you're replacing the right side and the car has a manual transmission, the engine can stay in place. But if the car has an automatic transmission, you'll need to install the transmission support bracket. Remove the battery and its tray, and the fender splash shield. Now, raise the transmission a small amount and remove the transmission mount. Then install the transmission support bracket as shown on next page 20-19.

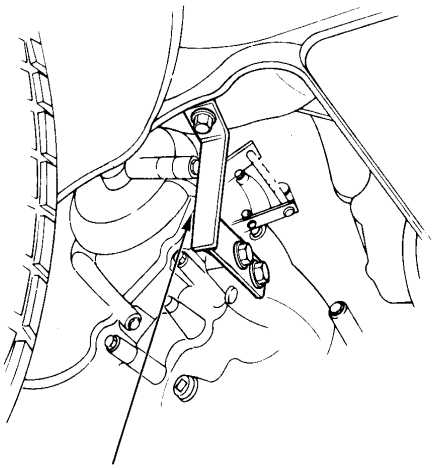

8. Insert the collets into the lower arm so they are directly opposite each other (180° apart) then slide the remover shaft into the bushing from the rear.

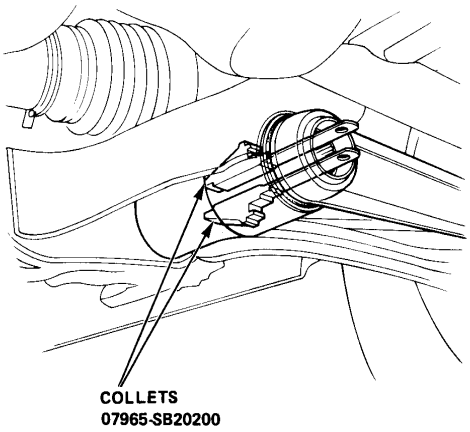

9. Slide the thrust bearing onto the remover shaft's bolt, then slide the bolt through the remover shaft.

10. Fit the reciever over the bolt and lower arm and install the flat washer and nut.

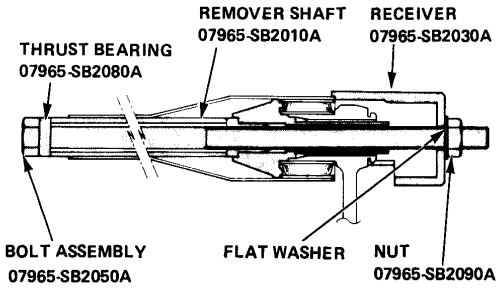

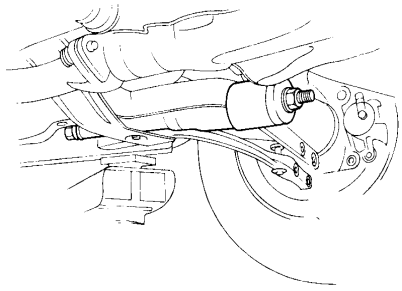

11. Hold the nut with a wrench while turning the bolt clockwise; this will pull the lower arm bushing free of the beam end.

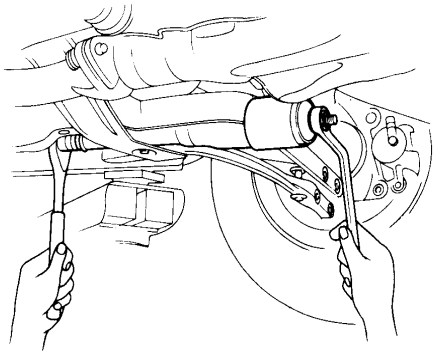

12. Remove the special tools from the beam.

Lower Arm

Installation

1. There is an alignment lug cast onto the lower arm. Use a felt tip pen to draw a line directly through the center of the lug and onto the bushing.

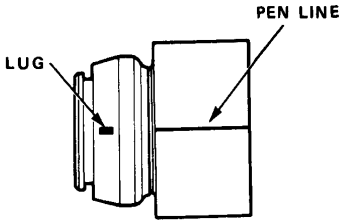

2. With the flat washer and thrust bearing still on the bolt, slide the assembly pilot onto it, then insert them into the back of the bushing hole in the beam.

3. Slip the lower arm onto the bolt and align the bushing line (felt tip pen) with the notch on the beam's bushing mount.

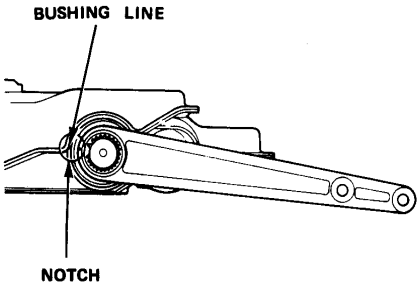

4. Fit the installer, flat washer and nut onto the bolt.

5. Hold the nut with a wrench as you turn the bolt clockwise; this will pull the new lower arm/bushing into place. When the edge of the bushing's steel outer sleeve is flush with the beam end, the bushing is installed to the correct depth.

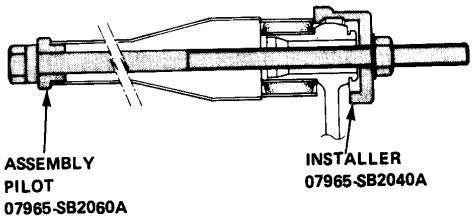

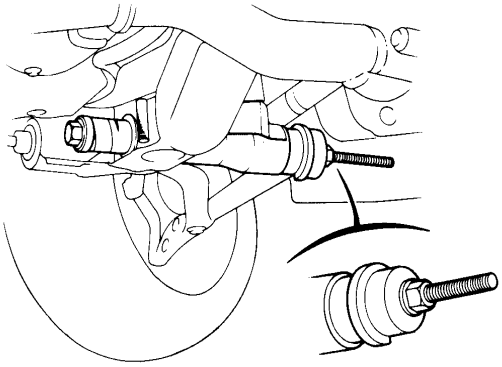

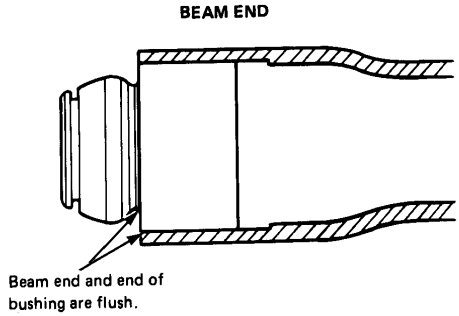

6. Remove the special tools from the beam end.

7. Remove any special tools used to hold the engine or transmission elevated, and reinstall any parts that were removed.

   - On the left side, remove the engine mount spacer, then reinstall the engine mount bolt. Reinstall alternator adjuster bolt, adjust belt tension and tighten bolt.
   - On the right side for cars with automatic transmission, remove the transmission support bracket and reinstall the transmission mount. Then reinstall the fender splash shield, battery tray and battery. Connect the battery cables.

8. Reinstall the torsion bar and torque tube following the instructions detailed on page 20-16.

Front Damper

Removal

1. Jack up the front of the car, support it with safety stands and remove the front wheels.
2. Remove the brake hose clamp bolt.
3. Use a floor jack to support the lower control arm.

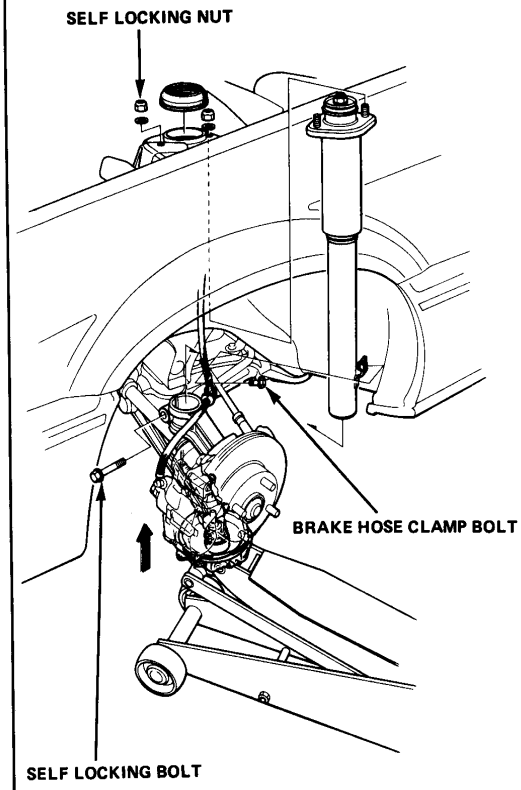

4. Remove the self locking bolt, then lower the jack gradually and remove it from the knuckle.

   CAUTION: Make sure the floor jack is positioned securely under the lower control arm at the ball joint. Otherwise, torsion bar tension on the control arm may cause the knuckle to "jump" suddenly away from the front shock absorber as the pinch bolt is being removed.

5. Remove the self locking nut and then remove the damper from the frame by compressing the shock absorber spring.

Disassembly/Inspection

1. Remove the self locking nut while holding the damper rod.

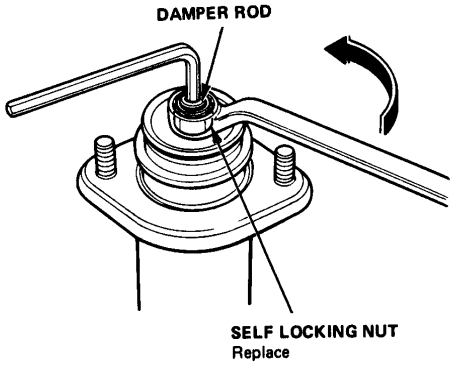

2. Disassemble the damper assembly.
3. Slowly move the damper piston rod a full stroke and check for smooth operation.
4. Jerk the piston rod back and forth 5—10 cm (2–4 in.) to check for smooth operation.
5. Inspect for oil leak or cracks in the piston rod.
6. Listen for abnormal noises.

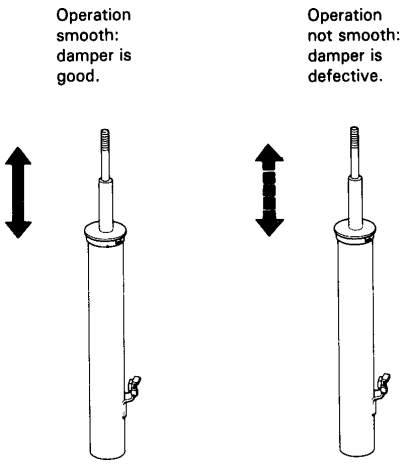

NOTE: The damper cannot be disassembled. If it does not operate smoothly, or if it makes any abnormal noises during operation, replace it.

Assembly/Installation

NOTE: Use a new self locking nut for reassembly.

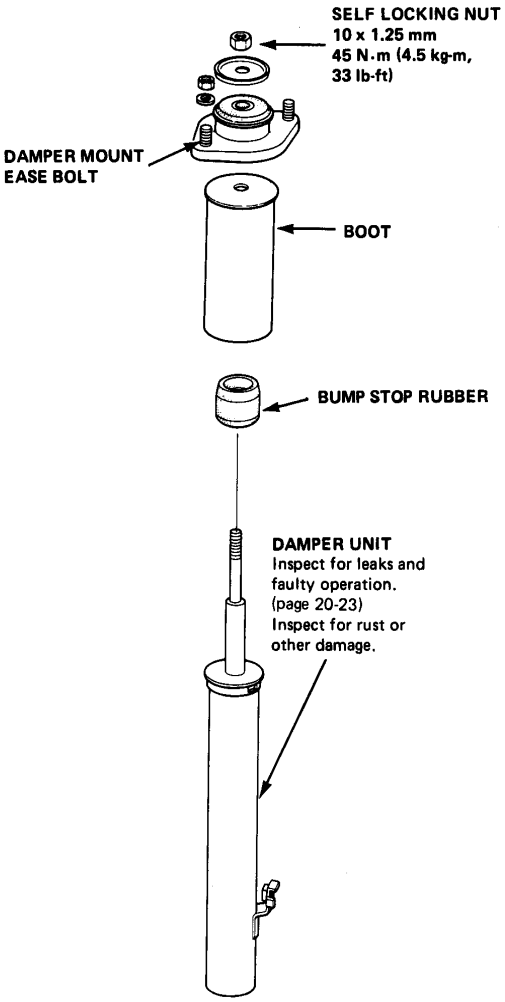

1. Install the damper assembly.

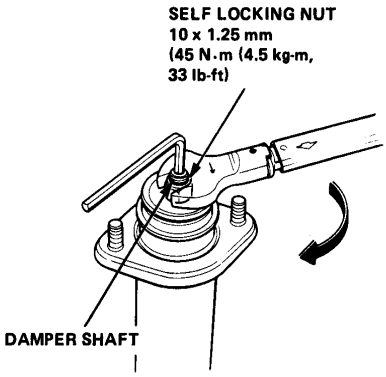

2. Install the self locking nut and tighten it while holding the damper shaft.
3. Compress the damper assembly and fit it into the frame.
4. Extend the damper, align the projection on the damper with the slot in the steering knuckle, then fit the damper into the knuckle and tighten the self locking bolt.

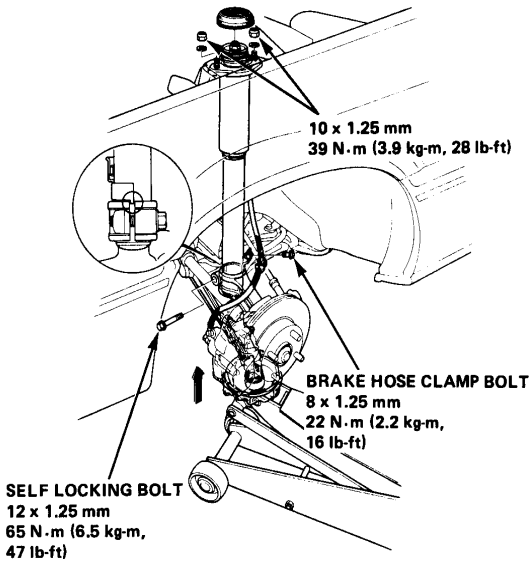

5. Install and tighten the brake hose clamp bolt.

Rear Suspension

Index

- **2WD**

NOTE: Replace self-locking bolts if you can easily thread a nut past their nylon locking inserts.

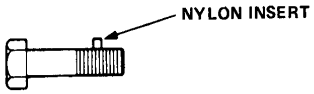

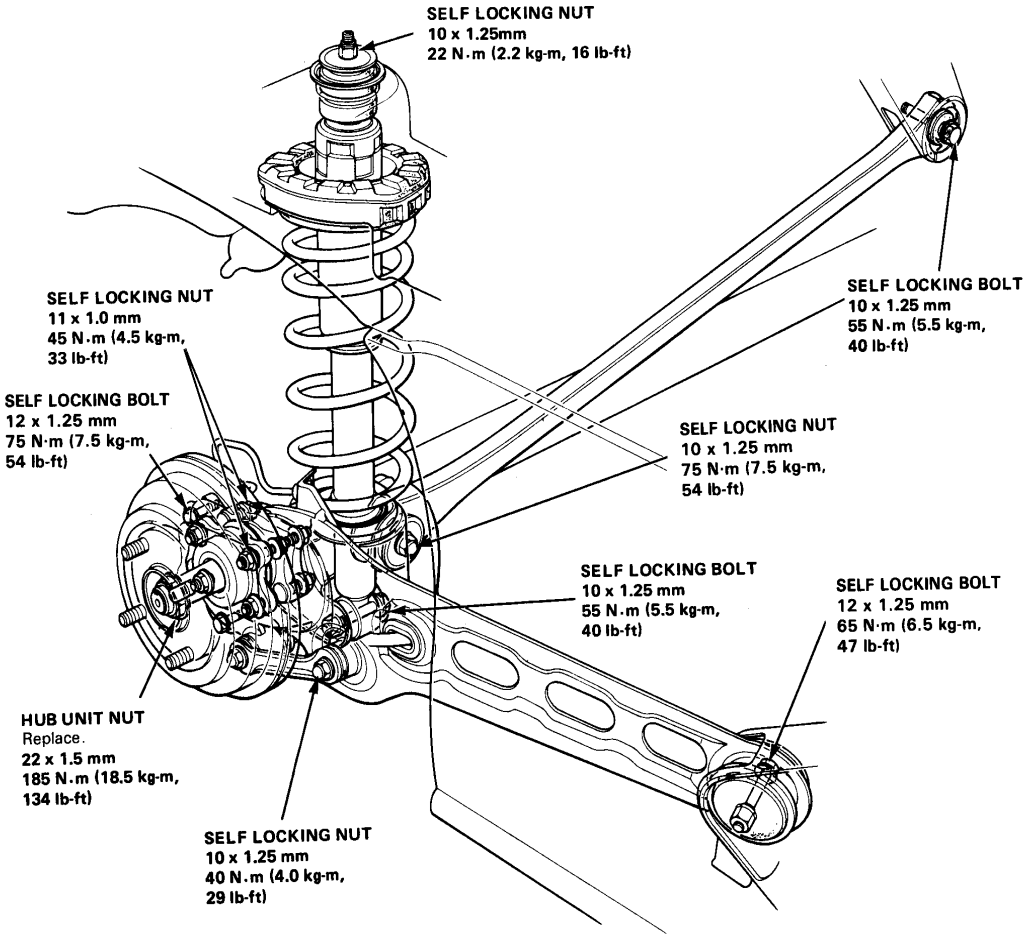

- **4WD**

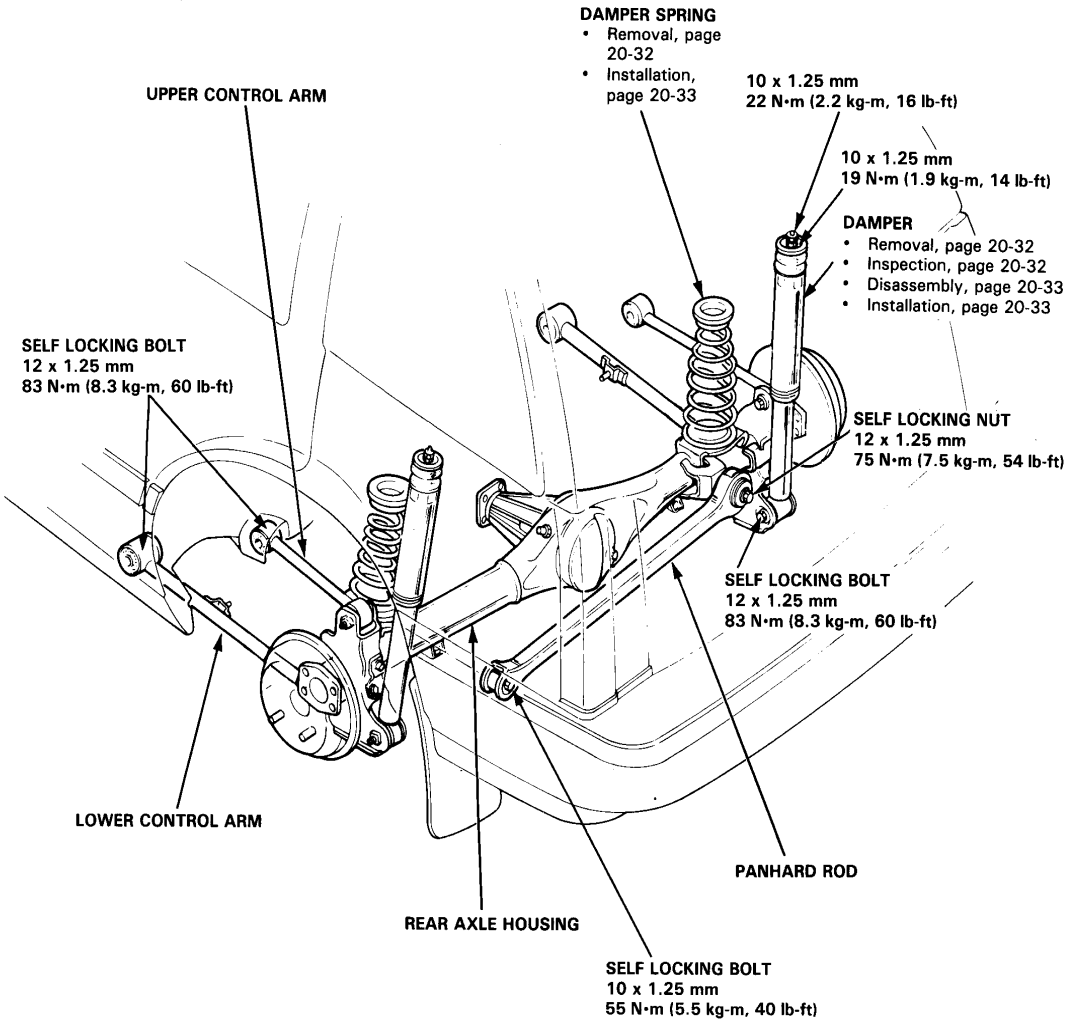
DAMPER SPRING
• Removal, page 20-32
• Installation, page 20-33
10 x 1.25 mm
22 N•m (2.2 kg-m, 16 lb-ft)
UPPER CONTROL ARM
10 x 1.25 mm
19 N•m (1.9 kg-m, 14 lb-ft)
DAMPER
• Removal, page 20-32
• Inspection, page 20-32
• Disassembly, page 20-33
• Installation, page 20-33
SELF LOCKING BOLT
12 x 1.25 mm
83 N•m (8.3 kg-m, 60 lb-ft)
SELF LOCKING NUT
12 x 1.25 mm
75 N•m (7.5 kg-m, 54 lb-ft)
SELF LOCKING BOLT
12 x 1.25 mm
83 N•m (8.3 kg-m, 60 lb-ft)
LOWER CONTROL ARM
PANHARD ROD
REAR AXLE HOUSING
SELF LOCKING BOLT
10 x 1.25 mm
55 N•m (5.5 kg-m, 40 lb-ft)

Rear Suspension

Disassembly/Inspection

- **2WD**

NOTE:

- Inspect all bushings and rubber parts for wear and damage.
- Replace all self locking nuts after disassembly.

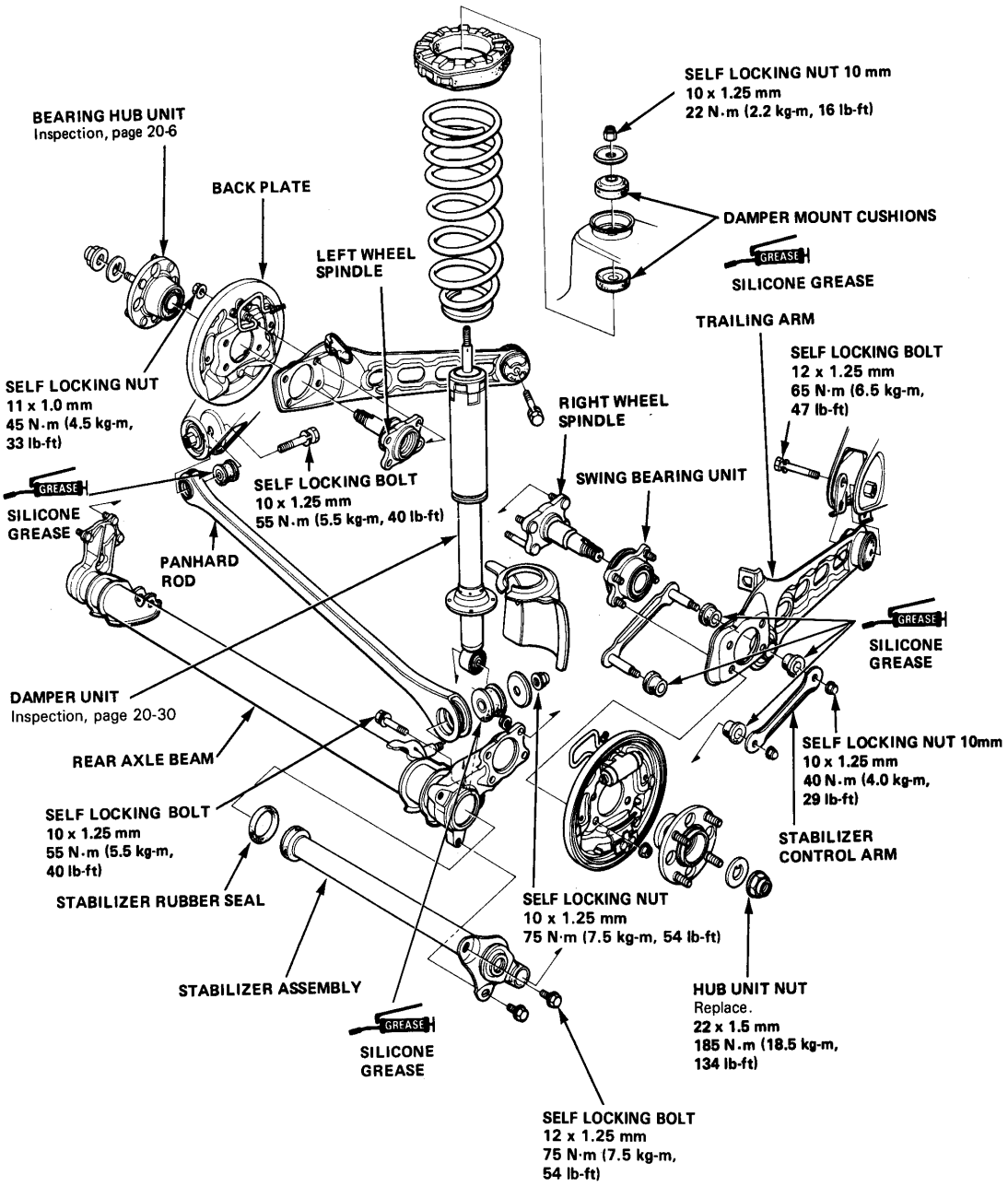

- **4WD**

NOTE:
- Inspect the rubber bushings for wear, damage or deterioration.
- Replace the self-locking nuts.
- Replace the self-locking bolts if nuts can be turned lightly by hand.

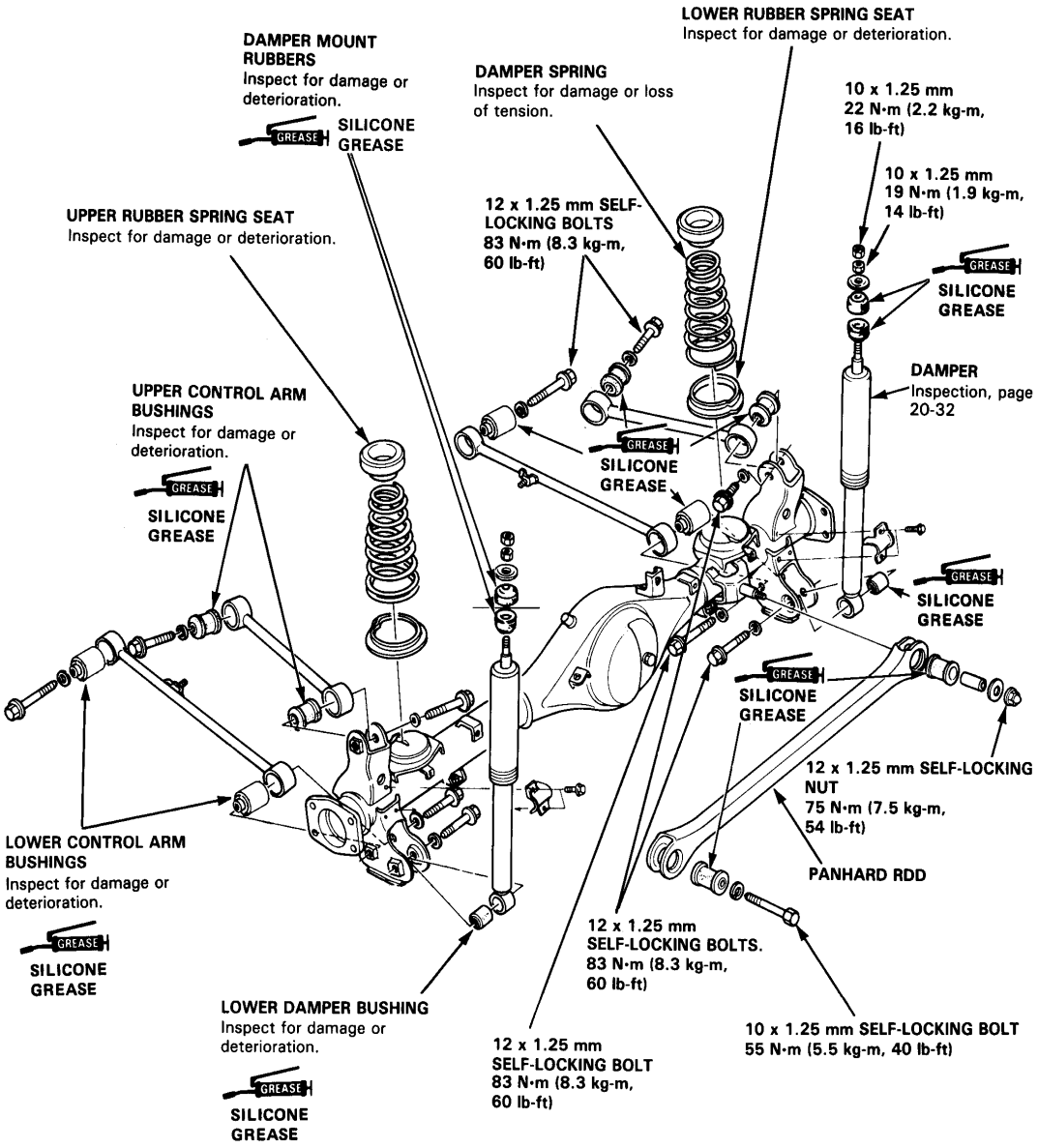

Hub Unit

Removal/Installation

1. Raise the rear of the car and support it with safety stands (see section 1 for the proper locations for the safety stands).
2. Remove the rear wheels.
3. Remove the brake drum and inspect the wheel bearing end play (page 20-5).
4. Remove the hub unit cap and nut.

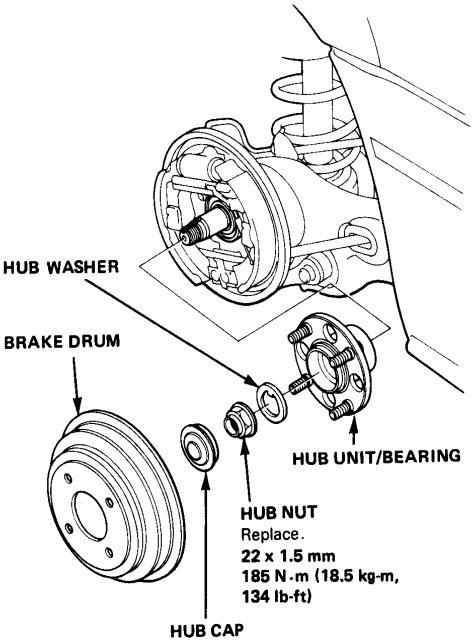

5. Remove the hub unit.
6. Installation is the reverse order of removal.

   NOTE: Stake the shoulder of the hub unit nut against the groove in the spindle after tightening.

Swing Bearing (2WD)

Removal

1. Remove the right backing plate.
2. Remove the stabilizer control plate, then remove the trailing arm from the swing bearing housing unit.

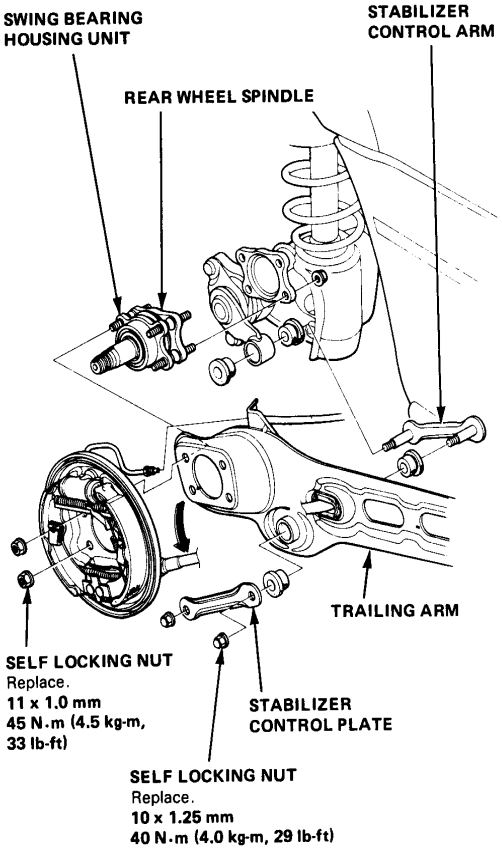

3. Remove the rear wheel spindle from the axle beam.

Replacement

4. Separate the rear wheel spindle from the swing bearing housing with a hydraulic press.

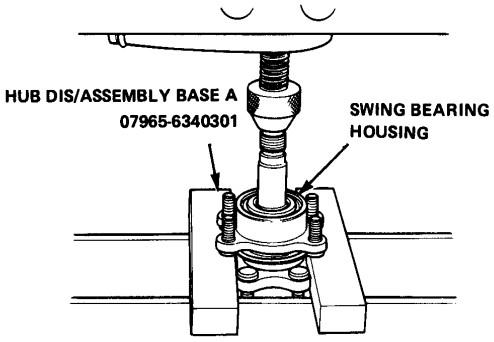

5. Remove the inner race with a bearing remover.

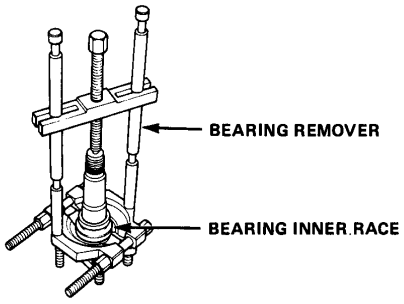

6. Install a new swing bearing when reassembling.

7. Install the wheel spindle into the swing bearing housing with the special tool and hydraulic press.

   NOTE: Set the hub dis/assembly base securely at the inner race of the swing bearing housing.

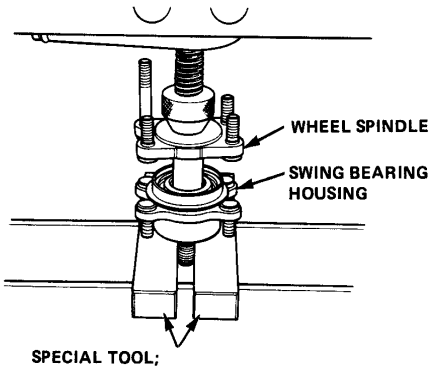

SPECIAL TOOL;
HUB DIS/ASSEMBLY BASE A 07965-6340301

Stabilizer Assembly (2WD)

Removal/Installation

1. Raise the rear of the car and support with safety stands (see section 1 for the proper locations for the safety stands).

2. Remove the rear wheels.

3. Remove both right and left backing plates (section 21).

4. Remove the stabilizer control arm (page 20-26).

5. Remove the stabilizer assembly mounting bolt.

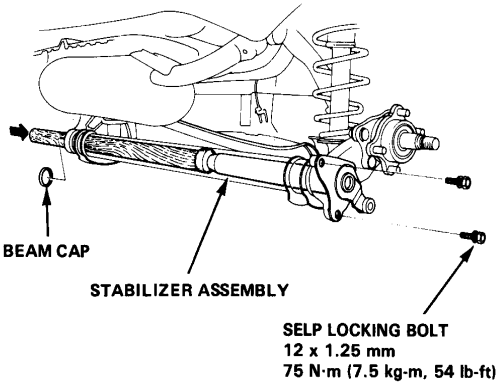

6. Remove the right beam cap.

7. Remove the stabilizer assembly by tapping it with a mallet.

8. Stabilizer reassembly is the reverse of removal.

   NOTE: When fitting the stabilizer assembly into the axle beam, tighten the two self locking bolts last.

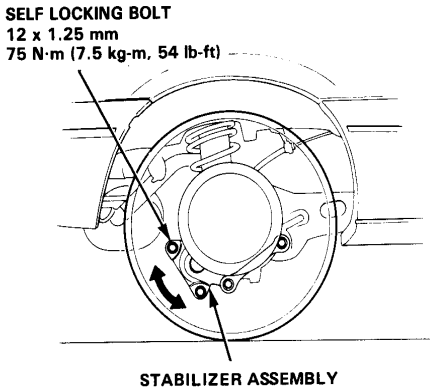

9. Tighten all bushings and rubber dampened parts after the car is back on the ground.

Rear Damper Assembly (2WD)

Removal

1. Raise the rear of the car and support it with safety stands (see section 1 for the proper locations for the safety stands).
2. Remove the rear wheels.
3. Place a jack under the rear axle beam.
4. Remove the damper maintenance lid and the self locking nut.

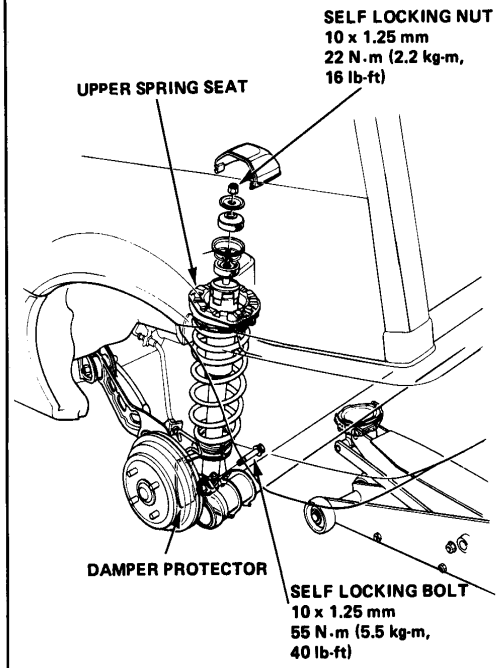

5. Remove the self locking bolt, damper assembly, spring and the upper spring seat.

Inspection

1. Slowly move the damper piston rod a full stroke and check for smooth operation.
2. Jerk the piston rod back and forth 5—10 mm (2—4 in.) and check for smooth operation.
3. Inspect for an oil leak or cracks in the piston rod.
4. Listen for abnormal noises.

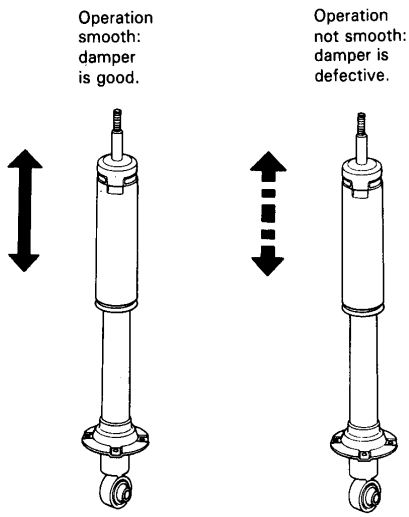

NOTE: The damper cannot be disassembled. If it does not operate smoothly, or if it makes any abnormal noises during operation, replace it.

Installation

1. Fit the upper spring seat into the frame.

2. Install the damper protector on the damper unit, install the damper spring, and then temporarily tighten the damper at the axle beam.

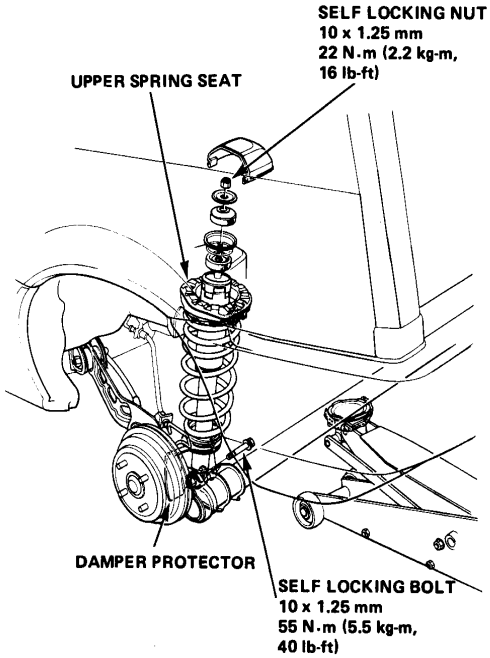

3. Fit the inner damper mount rubber into the frame.

4. Jack up the axle beam so that the damper shaft fits into the hole in the frame.

5. Install the outer damper mount rubber and washer and then tighten the self locking nut.

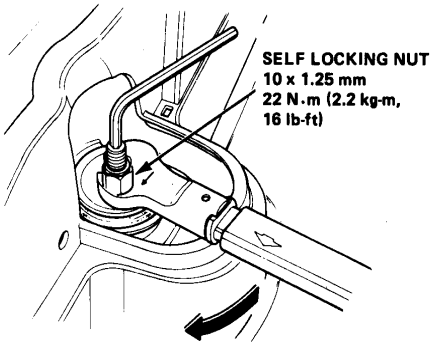

6. Install the damper maintenance lid.

7. Tighten the damper on the rear axle beam.

   NOTE: Tighten the rubber and bushing with the vehicle placed on the ground.

Rear Damper/Spring (4WD)

Removal

1. Jack up the rear of the car.
2. Use a floor jack to support the rear axle housing.
3. Remove the damper access cover; remove the cap and unscrew the two 10 mm nuts.

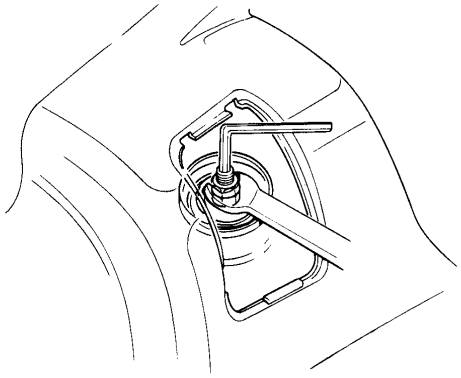

4. Lower the jack gradually and remove the damper spring, and upper and lower rubber spring seats.
5. Remove the damper by removing the 12 mm self-locking bolt.

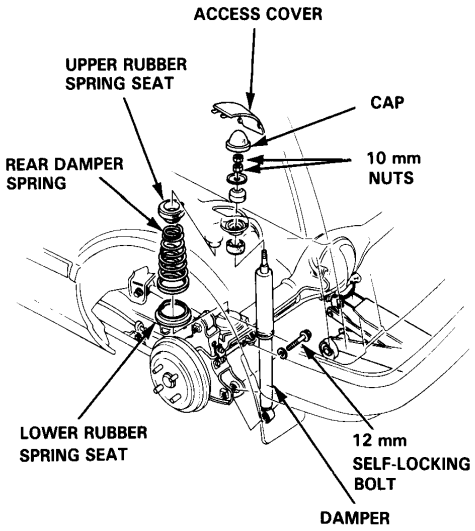

Damper Inspection

1. Slowly move the damper piston rod a full stroke and check for smooth operation and abnormal noise.
2. Jerk the piston rod back and forth 5—10 cm (2—4 in.) to check for uneven operation and abnormal noise.
3. Inspect the piston rod for signs of damage or oil leak.

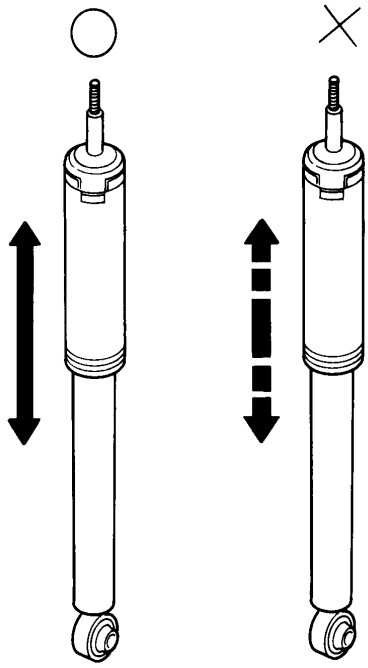

O: Good—Smooth movement; no abnormal noise; no signs of leakage.
×: Bad—Uneven movement, abnormal noises and/or signs of leakage require replacement.

Damper Disassembly/Inspection

4WD

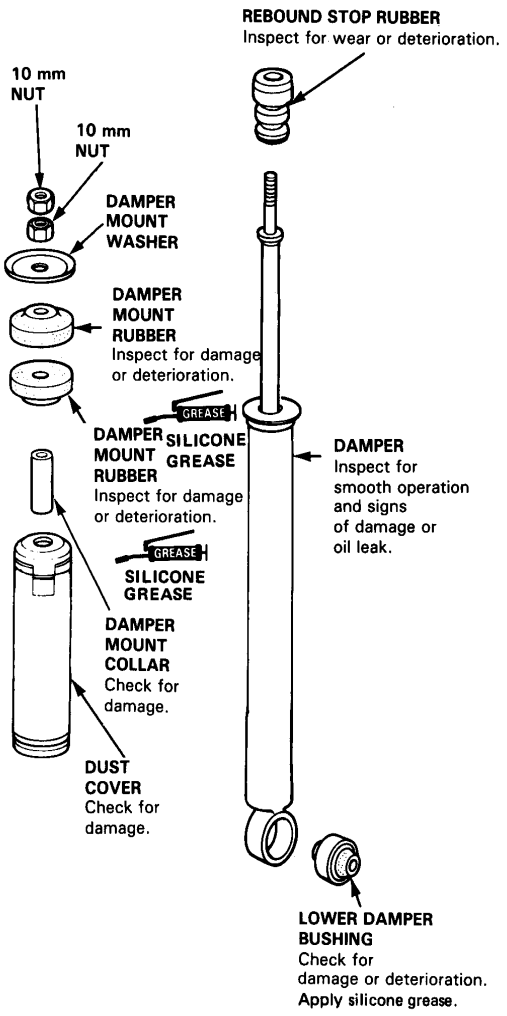

Installation

1. Install the upper rubber spring seat on the frame.
2. Place the lower rubber spring seat on the rear axle housing; position the damper spring on the seat.
3. Temporarily install the damper upright on the axle housing.
4. Using a floor jack, gradually raise the housing until the piston rod is through of the mounting hole in the frame. Also make sure that the damper spring is in its correct position.

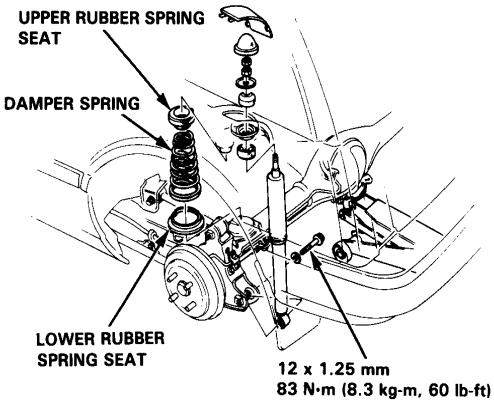

5. Install the damper mounting rubber and washer and torque the 10 mm nuts.

Torques:
Upper Nut: 22 N·m (2.2 kg-m, 16 lb-ft)
Lower Nut: 19 N·m (1.9 kg-m, 14 lb-ft)

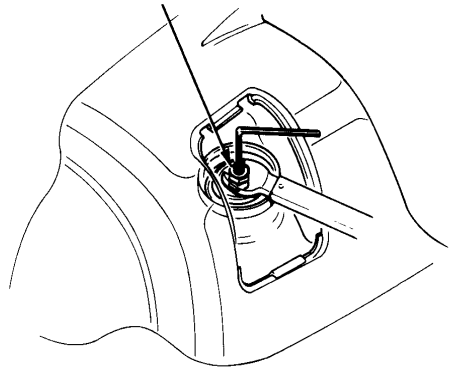

6. Install the cap and access cover.
7. Torque the 12 mm self-locking bolt.

WARNING Tighten the 12 mm self-locking bolt with the wheels on the ground.

Rear Suspension (4WD)

Construction

The rear suspension uses a live axle with a Panhard rod between the frame and axle housing as shown.
The axle housing is mounted on dampers and damper springs and is linked to the frame by a set of upper and lower control arms. The control arm and Panhard rod arrangement reduces the swing of the propeller shaft and improves road holding by controlling the movement of the axle housing. The damper springs are mounted directly on the axle housing, independent of the dampers.

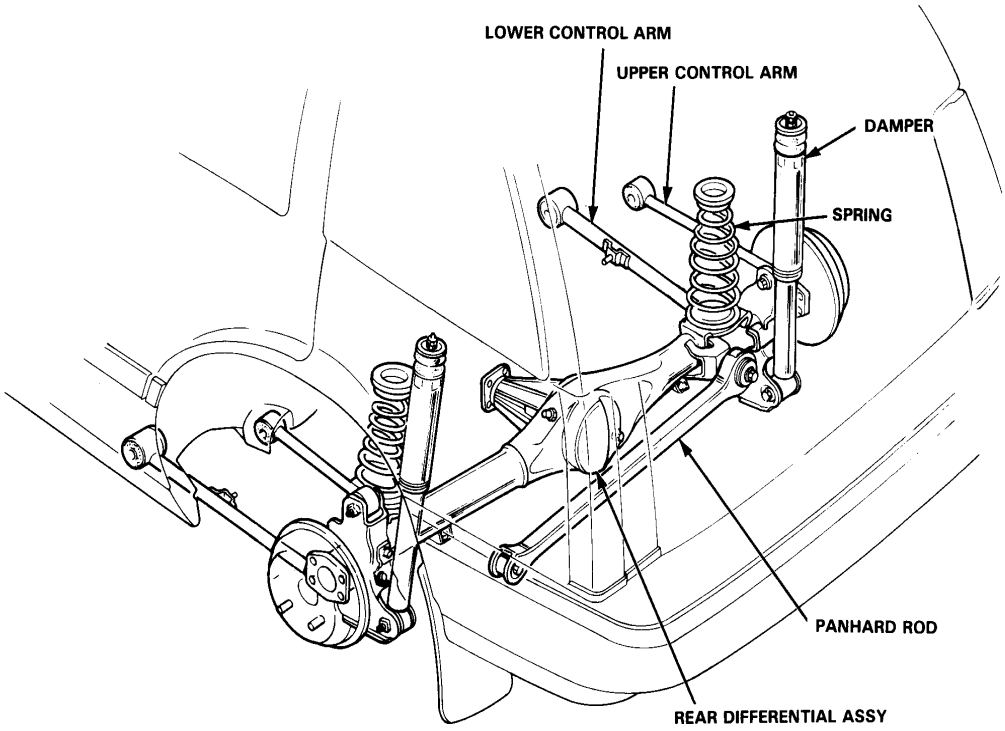

Components

(Dampers)

Gas-filled dampers control spring action or vibration, ensuring smoother ride, faster response and better roadholding. Friction is minimized as they are virtually free of bending stresses as the wheels move up and down. Mounted independently of the damper springs, they allow use of a rubber bushing with low spring rate to further improve compliance, and ensuring a smoother ride.

(Springs)

The springs are mounted between the rear axle housing and the frame through a rubber bushed bracket. Longer rebound stroke plus progressive spring rate combine to improve efficiency under light and heavy load conditions.

(Panhard Rod)

The Panhard Rod has a U-shaped section of welded steel plates; it produces resistance to side movement of the axle housing.

(Upper and Lower Control Arms)

The rear end of the upper arm is fastened to the top of the axle housing, and the front end to the car frame. The rear end of the lower arm is fastened to the bottom of the axle housing, and the front end to the frame. The longer lower arms reduce power input to the body and ensure lower level of road noise as they suspend the wheels at a greater distance from the body. The arrangement also reduces the degree of toe-in when accelerating or braking, improving compliance and ensuring a smoother ride.

Brakes

Brakes

Illustrated Index

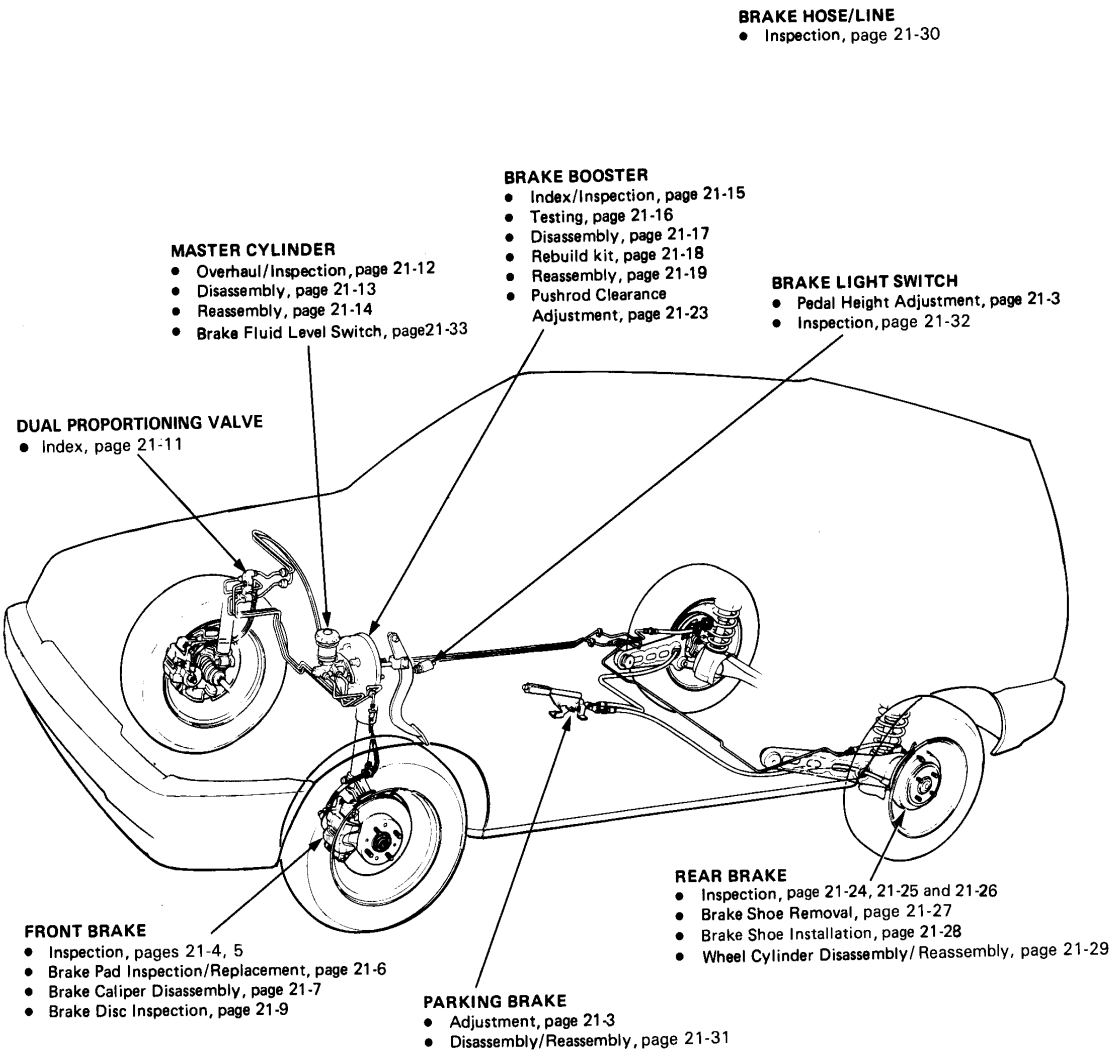

Pedal Height

Adjustment

1. Loosen the brake light switch locknut and back off the brake light switch until it is no longer touching the brake pedal.

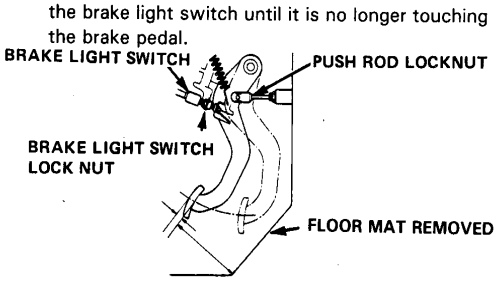

PEDAL PLAY	1—5 mm (1/16—13/64 in.)
PEDAL HEIGHT	Hatchback and Sedan: 174 mm (6.7/8 in.)
	Wagon: 168 mm (6.5/8 in.)

2. Loosen the pushrod locknut and screw the pushrod in or out with pliers until the pedal height from the floor is:
   Hatchback and Sedan : 174 mm (6-7/8 in.)
   Wagon : 168 mm (6-5/8 in.).
   After adjustment, Tighten the locknut firmly.

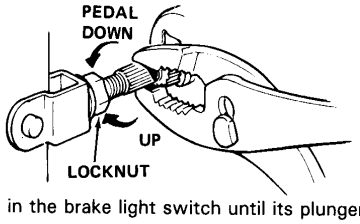

3. Screw in the brake light switch until its plunger is fully depressed (threaded end touching the pad on the pedal arm). Then back off the switch 1/2 turn and tighten the locknut firmly.

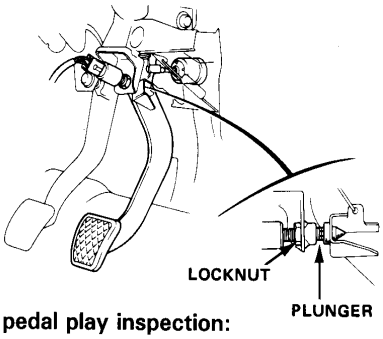

Brake pedal play inspection:

Stop the engine and inspect the play by pushing the pedal by hand.
Brake pedal play: 1-5 mm (1/16-13/64 in.)

NOTE: Do not adjust the pedal height with the pushrod pushed.

CAUTION: Check that the brake lights go off when the pedal is released.

Parking Brake

Adjustment

NOTE: After brake drum servicing, depress the brake pedal several times to set the self-adjusting brakes before adjusting brake cable.

WARNING Block the front wheels before jacking up the rear of the car.

1. Raise the rear wheels off the ground.
2. Loosen the equalizer adjusting nut in the console.
3. Pull the parking brake lever up one notch.
4. Tighten the equalizer adjusting nut until the rear wheels drag slightly when turned.
5. Release the brake lever and check that the rear wheels do not drag when turned. Readjust if necessary.

NOTE: With the equalizer properly adjusted, the rear brakes should be fully applied when the parking brake lever is pulled up 4 to 8 clicks.

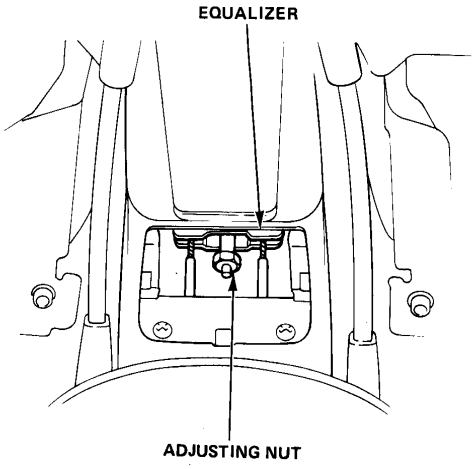

Front Brakes

Index/Inspection, Wagon

NOTE:
- Coat piston, piston seal, and caliper bore with clean brake fluid.
- Replace all rubber parts with new ones whenever disassembled.

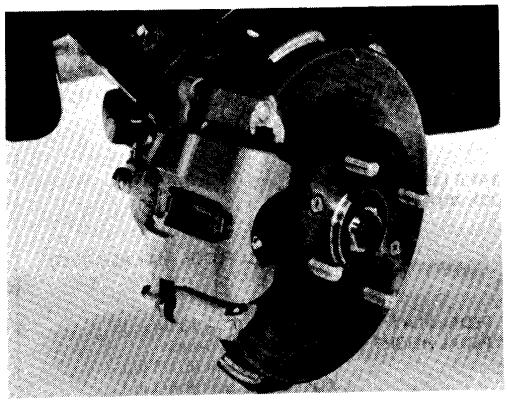

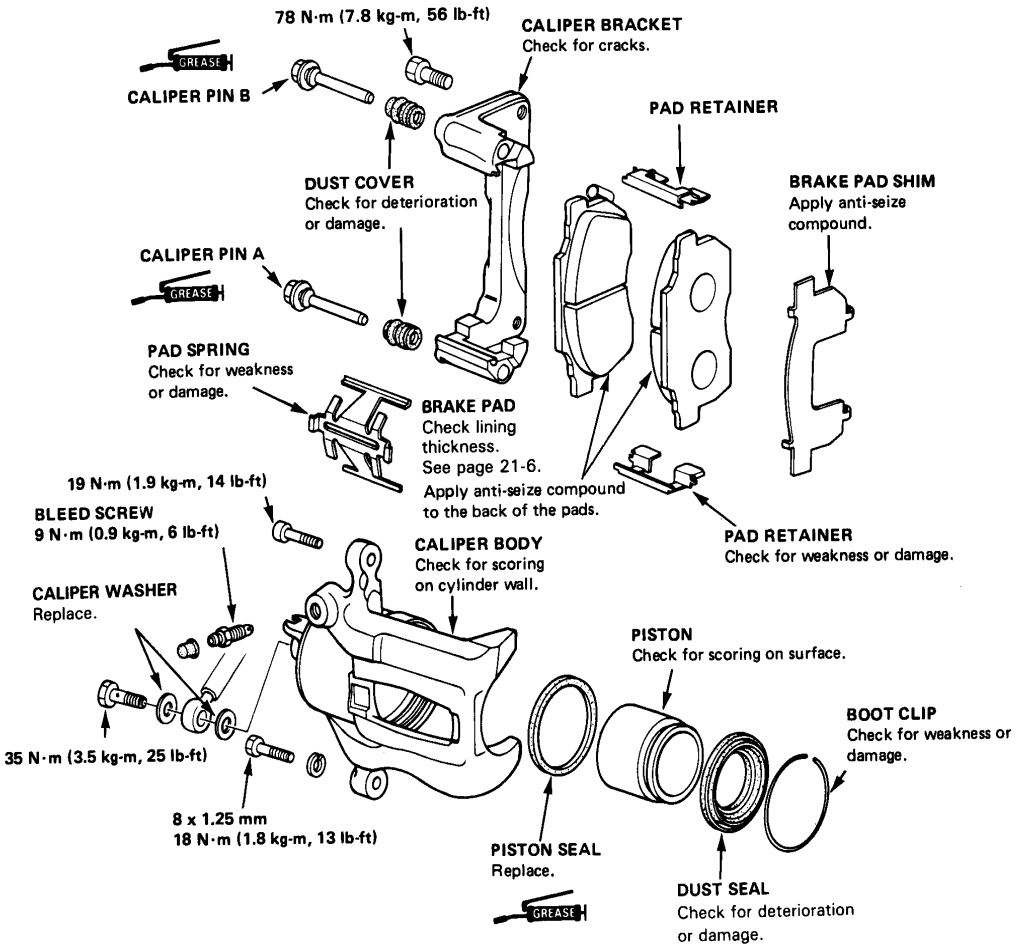

Hatchback and Sedan

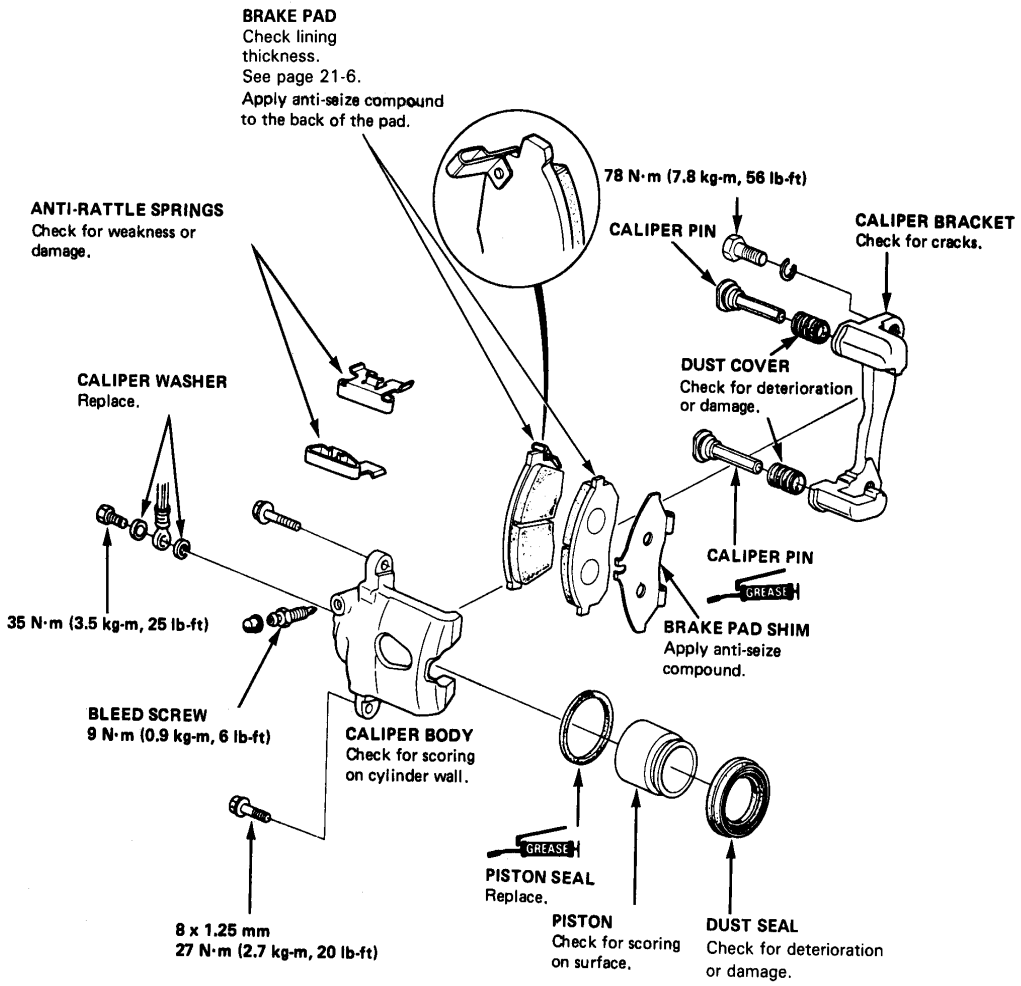

Brake Pad

Inspection/Replacement

1. Remove the front wheels and support the front of car on safety stands.

2. Remove caliper pin A bolt and pivot caliper up out of the way.

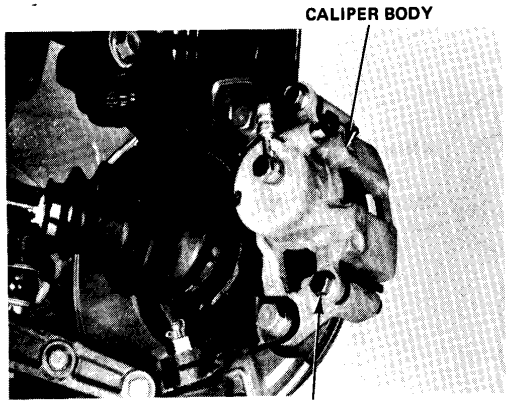

3. Remove the pad shim and pads.

4. Using a vernier caliper, measure the thickness of each brake pad lining.

Brake Pad Thickness

Standard:	**9.5 mm (0.374 in.)**
Service Limit:	**3 mm (0.118 in.)**

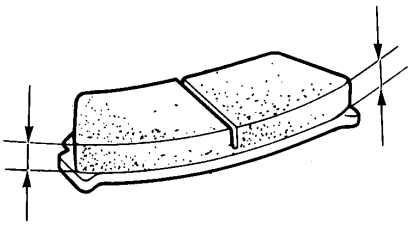

5. If lining thickness is less than service limit, replace both pads as a set.

NOTE: Before replacing or installing new brake pads, coat the backs of the pads and shims with anti-seize compound.

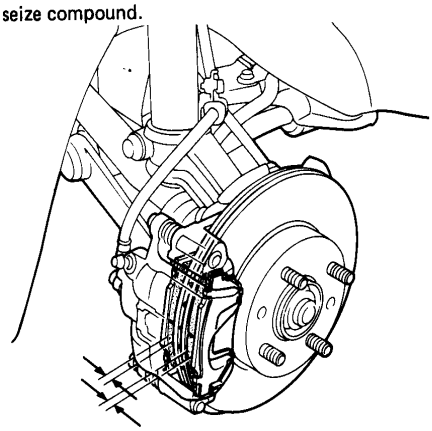

6. Clean the caliper thoroughly; remove any rust, and check for grooves or cracks.

7. Install the pad retainers.

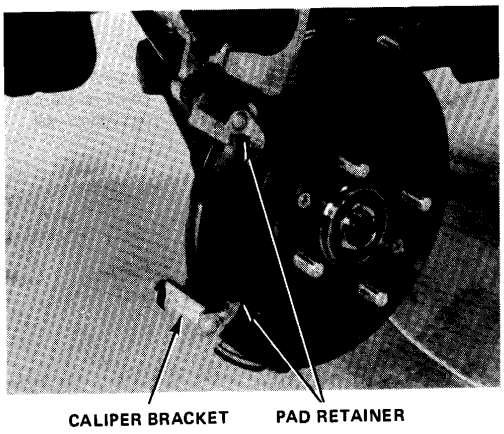

8. Apply anti-seize compound to the both sides of the shim and back of the pads, then install them with the shim on the out side.

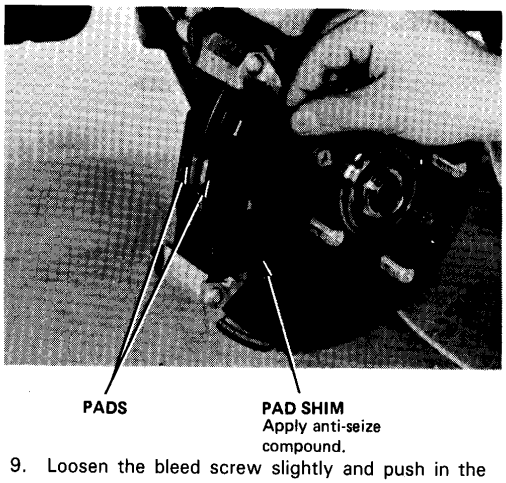

9. Loosen the bleed screw slightly and push in the piston so the caliper will fit over the pads. Tighten the bleed screw.

10. Pivot the caliper down into position, then reinstall the caliper pin A bolt and tighten to 18 N•m (1.8 kg-m, 13 lb-ft).

NOTE: Install the inner pad with pad wear indicator on the inside.

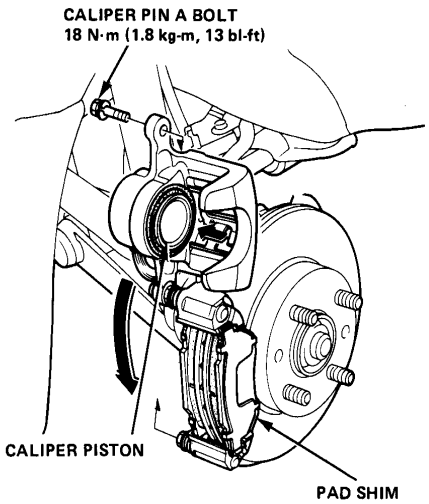

11. Depress the brake pedal several times to make sure the brakes are working, then road test.

Brake Caliper

Disassembly

1. Unscrew the banjo bolt and remove the brake line.

2. Remove the caliper pin bolts, then remove the caliper.

NOTE: Avoid damaging the splash guard at the upper part of the caliper.

CAUTION:
- **Avoid spilling brake fluid on paint as it may damage the finish.**
- **Plug the end of the brake hose with a shop rag to prevent brake fluid from flowing out of the brake hose after disconnecting.**

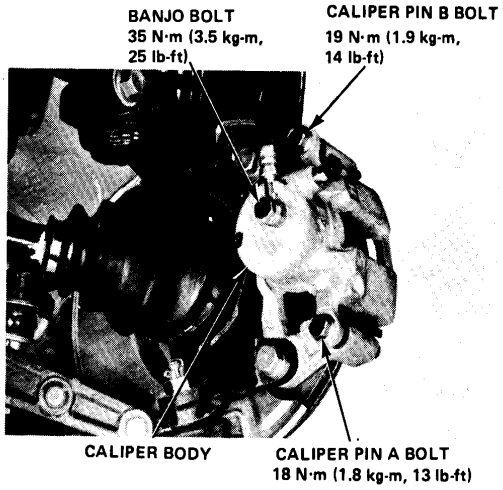

3. Remove the boot clip (Wagon), and pad spring.

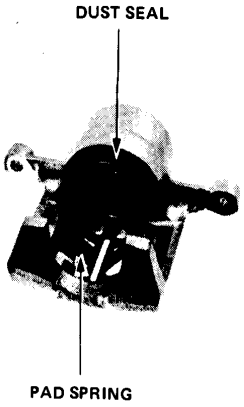

(cont'd)

Brake Caliper

Disassembly (cont'd)

4. Place a shop rag or block of wood in the caliper opposite the piston, then carefully remove the piston from the caliper by applying air pressure through the brake line hole.

   - Do not place your fingers in front of the piston.
   - Do not use high air pressure; use an OSHA approved 30 PSI nozzle.

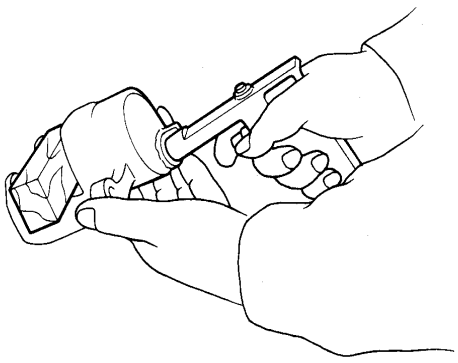

5. Remove the dust seal and piston seal.

   CAUTION: Take care not to damage the cylinder bore.

6. Clean the piston and cylinder bore with brake fluid and then inspect the sliding surfaces for wear or damage.

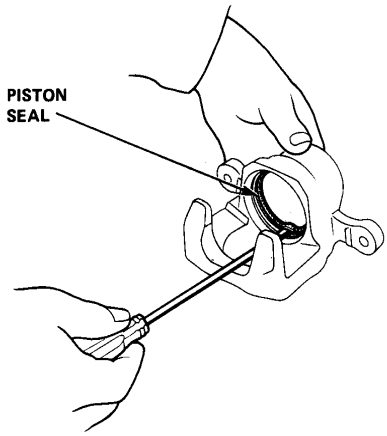

Reassembly

1. Clean the piston and cylinder bore with brake fluid and inspect for wear or damage.
2. Apply brake fluid to a new piston seal, then install piston seal in cylinder groove.

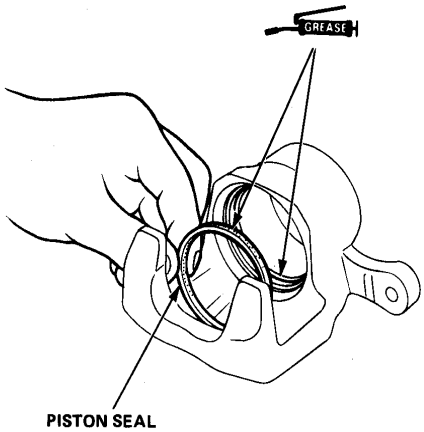

3. Lube the dust seal with brake fluid, then install it into the groove of caliper body.
4. Lube the piston with brake fluid.

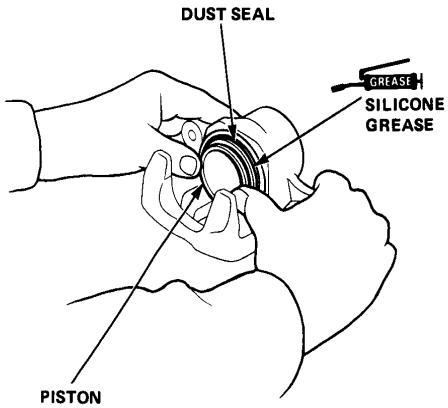

5. When the dust seal is evenly seated, insert the piston into the dust seal then push the piston until the upper ridge of the dust seal is seated in the piston groove.

   CAUTION: Take care not to damage the dust seal.

6. Install the boot clip (Wagon).

Front Brake Disc

Run-Out

1. Remove the front wheels and support the front of car with safety stands.

2. Remove caliper pin A bolt, then pivot the caliper up out of the way on the upper guide pin bolt, and remove the pads and pad retainers (page 21-6).

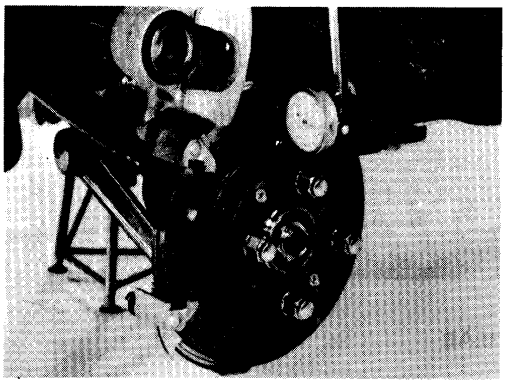

3. Inspect the disc surface for grooves, cracks, and rust. Clean the disc thoroughly and remove all rust.

4. Use the lug nuts to hold the disc securely against the hub, then mount a dial indicator 10 mm (0.39 in.) in from the outer edge.

   - Check the runout while turning the disc slowly by hand.

   Brake Disc Runout:
   Service Limit: 0.10 mm (0.004 in.)

5. If the disc is beyond the service limit, refer to the Honda Brake Disc Grinder Manual to see if it can be ground. If it can't be ground, remove it and install a new one. Then, reinstall the caliper bracket and torque the bolts to 78 N·m (7.8 kg-m, 56 lb-ft).

Thickness and Parallelism

1. Remove the front wheels and support the front of car with safety stands.

2. Move the caliper and pads out of the way as described in the preceding column.

3. Using a micrometer, measure disc thickness at eight points, approximately 45° apart and 10 mm (0.39 in.) in from the outer edge of the disc.

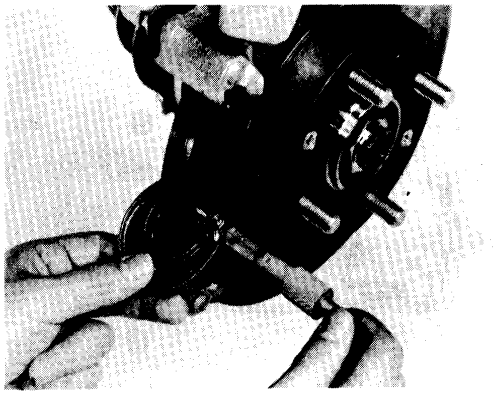

Brake Disc Thickness

Hatchback 1300

Standard:	**12 mm (0.47 in)**
Max. Refinishing Limit:	**10 mm (0.39 in)**

All others (Ventilatad Disk)

Standard:	**17 mm (0.67 in)**
Max. Refinishing Limit:	**15 mm (0.59 in)**

NOTE: If the refinishing limit stamped on the disc does not match the one listed above, use the one on the disc.

Brake Disc Parallelism:

The difference between any thickness measurements should not be more than 0.015 mm (0.0006 in.).

4. If the disc is beyond the limits for parallelism, refer to the Honda Brake Disc Grinder Manual to see if it can be ground. If it can't be ground, remove it and install a new one. Then, reinstall the caliper bracket and torque the bolts to 78 N·m (7.8 kg-m, 56 lb-ft).

NOTE: A new disc should be ground if its runout is greater than 0.10 mm (0.004 in.).

Bleeding

NOTE: The reservoir on the master cylinder must be full at the start of bleeding procedure and checked after bleeding each wheel cylinder. Add fluid as required. Use only DOT 3 or 4 brake fluid.

- Make sure no dirt or other foreign matter is allowed to contaminate the brake fluid.
- Avoid spilling brake fluid on painted surfaces as it can damage the finish. Wash spilled brake fluid off immediately with clean water.

Bleeding Sequence

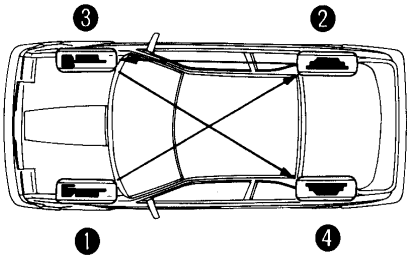

1. Have someone slowly pump the brake pedal several times, then apply steady pressure.
2. Loosen the brake bleed screw to allow air to escape from the system.

FRONT

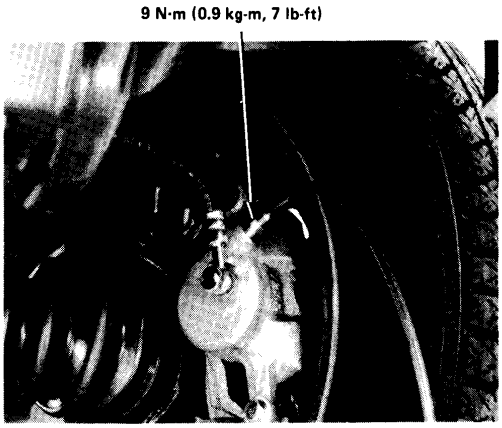

REAR

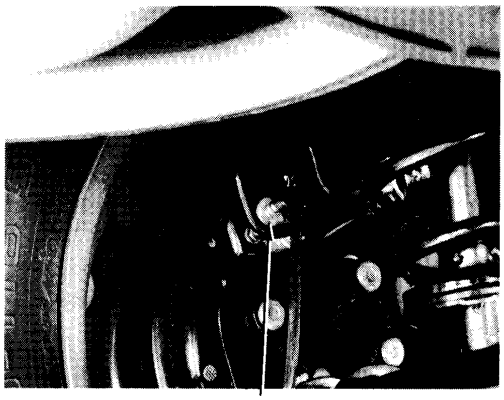

3. Repeat the procedure for each wheel in the sequence shown. When air bubbles no longer appear in the fluid, tighten the bleed screw securely.
4. Check brake performance by road testing.

Brake Booster, Master Cylinder, Proportioning Valve

Index

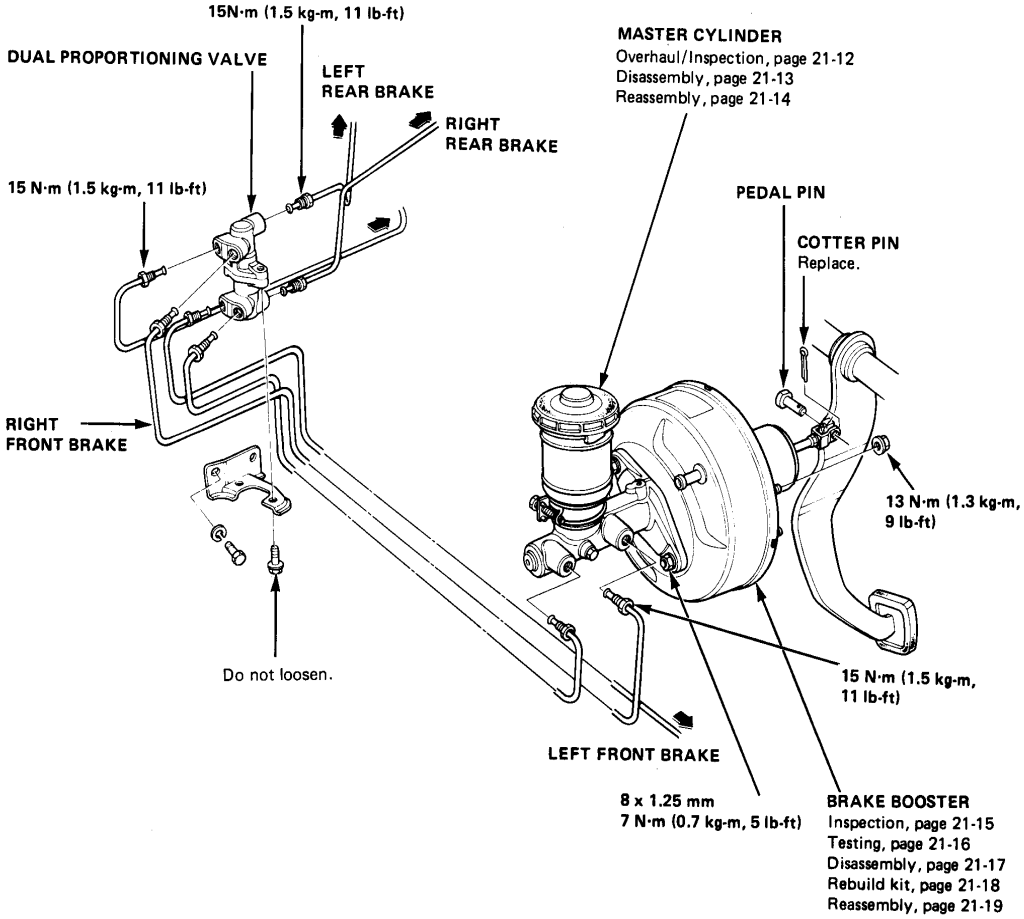

Master Cylinder

Overhaul/Inspection

CAUTION:

- **Avoid spilling brake fluid on painted surfaces as severe damage can result. Wipe up spilled fluid at once and rinse well with clean water.**
- **This symbol represents brake fluid. Use only DOT 3 or 4 brake fluid.**

NOTE:

- Wash all removed parts in brake fluid and blow dry with compressed air. Blow open all passages and fluid ports.
- Replace all rubber parts with new ones whenever the cylinder is disassembled.
- To prevent damage, liberally apply clean brake fluid to the piston cups before installation. Use special tool to install the cups.

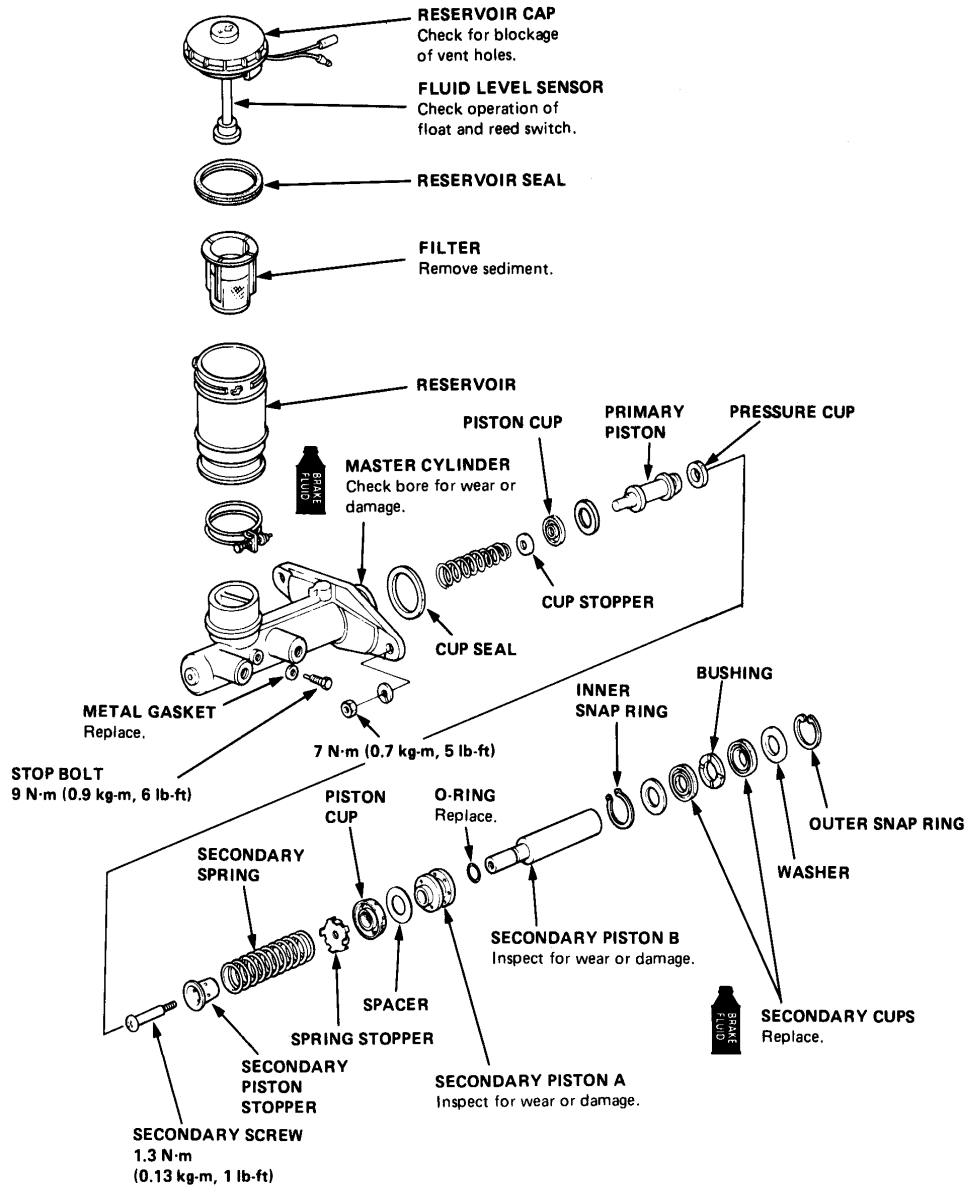

Disassembly

CAUTION:
- **Avoid spilling brake fluid on painted surfaces as it can damage the finish. Wash spilled brake fluid off immediately with clean water.**

NOTE:
- Wash all removed parts in brake fluid and blow dry with compressed air. Blow open all passages and fluid ports.
- Replace all rubber parts with new ones whenever the cylinder is disassembled.
- To prevent damage, liberally apply clean brake fluid to the piston cups before installation.

1. Remove the outer snap ring.

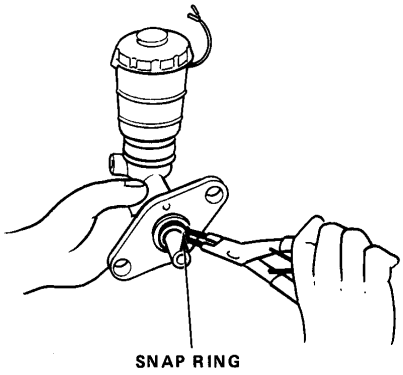

2. Remove the washer, secondary cup, and secondary piston bushing.

3. Remove the stop bolt, and remove the inner snap ring with the snap ring pliers while pushing on the secondary piston assembly.

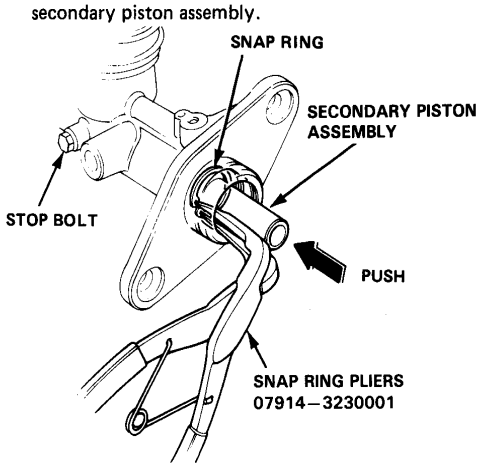

NOTE: Avoid damaging the master cylinder wall.

4. Remove the primary piston assembly. If necessary, remove by blowing compressed air through the primary piston hole.

   NOTE: Wrap a shop rag around the open end of the cylinder before using compressed air.

5. Remove the screw from the secondary piston assy, and remove the secondary spring.

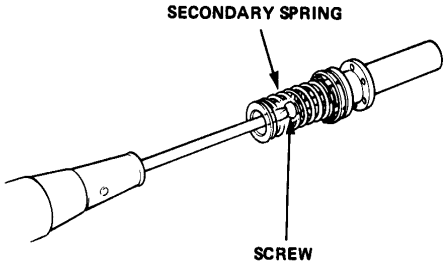

6. Clean all parts thoroughly with BRAKE FLUID only.

Master Cylinder

Reassembly

CAUTION:
- **Make sure all parts are clean before installation.**
- **Use only new replacement parts.**
- **Use only new clean brake fluid. Do not allow dirt or other foreign matter to contaminate the brake fluid.**
- **Do not mix different brands of brake fluid.**
- **Avoid spilling brake fluid on painted surfaces as it can damage the finish. Wash spilled brake fluid off immediately with clean water.**

1. Lubricate new piston assemblies with brake fluid, then install in the master cylinder.

   NOTE: To ease assembly, rotate the pistons while inserting.

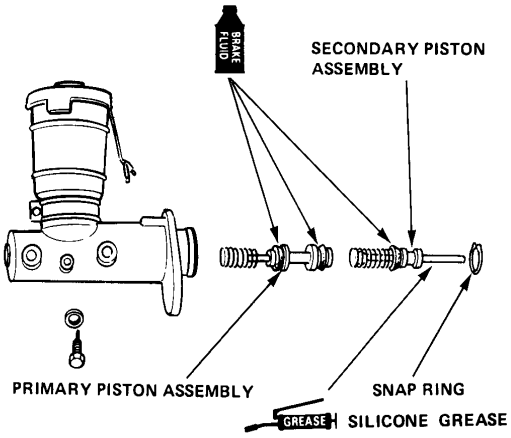

2. Press down on the cylinder as shown, then install the stop bolt.

   NOTE: Replace the piston stop bolt metal gasket with a new one.

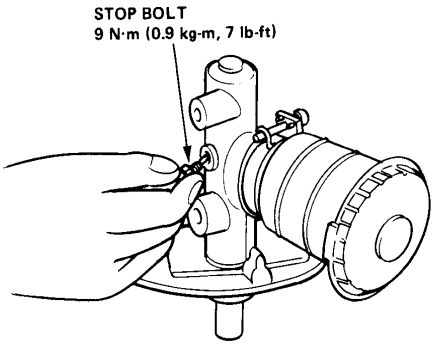

3. Turn the master cylinder over, press down on the secondary piston, then install the inner snap ring.

4. Install the secondary cups, bushing, and outer snap ring.

5. Install the seal on the master cylinder mounting flange.

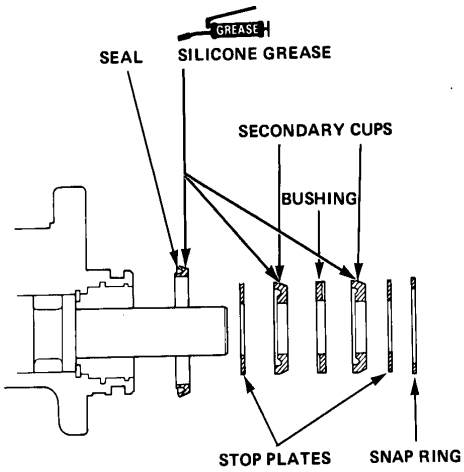

NOTE: Make sure the seal and cups are installed facing the direction shown.

Brake Booster

Index and Inspection

Booster testing is on next page.

NOTE:
- Parts marked® are available with rebuild kit and must be replaced whenever disassembled.
- GREASE on this page refers to silicone grease.

NOTE: Scribe an alignment mark across the front and rear housings so you can reassemble them in their original positions.

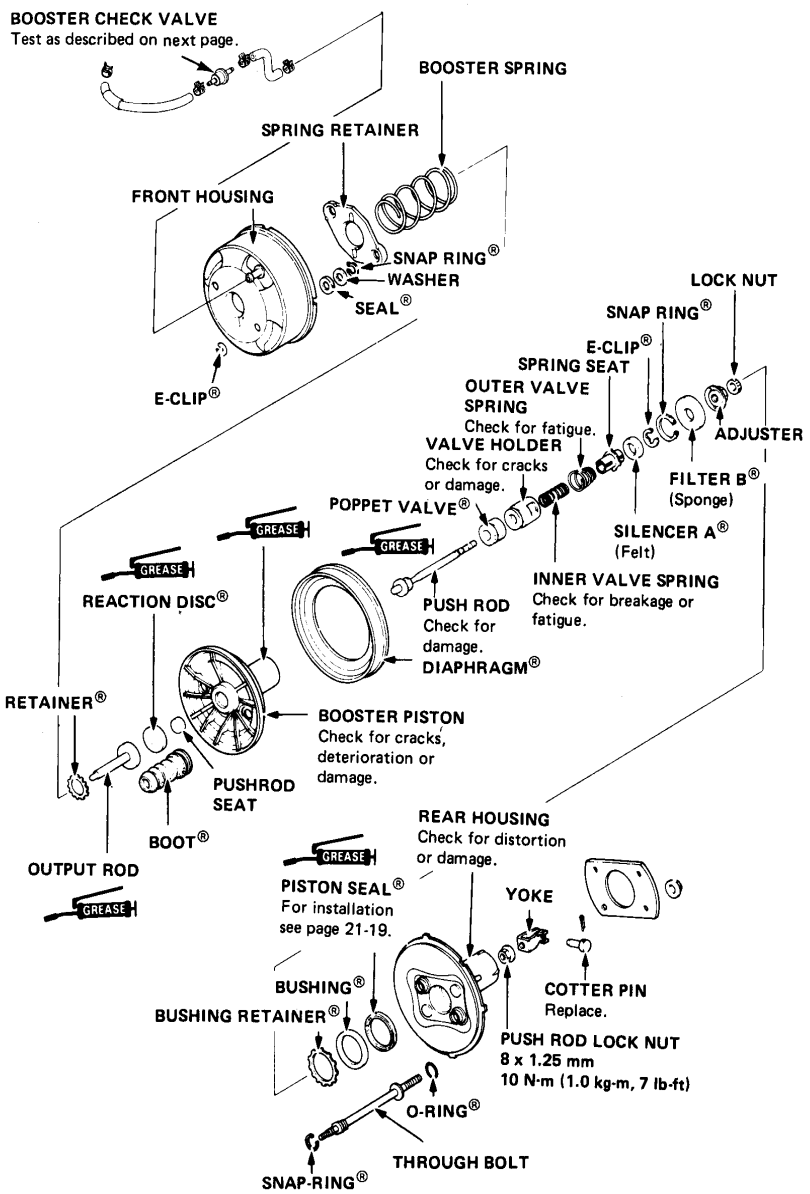

Brake Booster

Testing

Functional Test

1. With the engine off, depress the brake pedal several times, then depress the pedal hard and hold that pressure for 15 seconds. If the pedal sinks, a brake line, a wheel cylinder, or the master cylinder is faulty.

2. Start the engine with the pedal depressed. If the pedal sinks slightly, the vacuum booster is working. If the pedal height does not vary, the booster or check valve is faulty.

Leak Test

1. Depress the brake pedal with the engine running, then stop the engine. If the pedal height does not vary while depressed for 30 seconds, the vacuum booster is OK. If the pedal rises, the booster is faulty.

2. With the engine off, depress the brake pedal several times, using normal pressure. When the pedal is first depressed, it should be low. On consecutive applications, pedal height should gradually rise. If the pedal position does not vary, check the booster check valve.

Check Valve Test

1. Disconnect the brake booster vacuum hose at the booster.

2. Start the engine and let it idle. There should be vacuum available. If no vacuum is available, the check valve is not working correctly.
   Replace the check valve and retest.

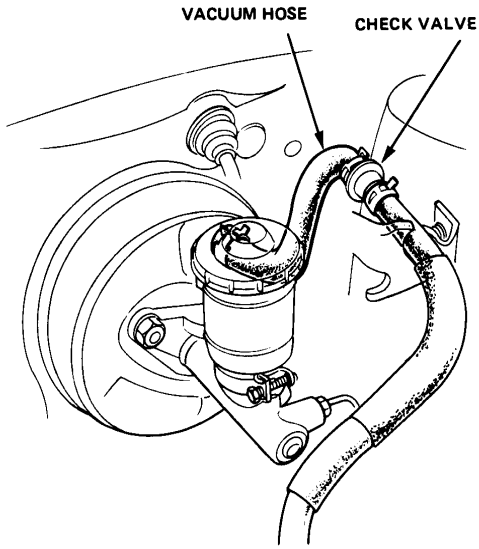

Disassembly

1. Scribe an aligning mark across the front and rear booster housings to ensure proper positioning of parts on reassembly.
2. Remove the master cylinder.
3. Remove the E-clips, and separate the front booster housing and the rear booster housing.

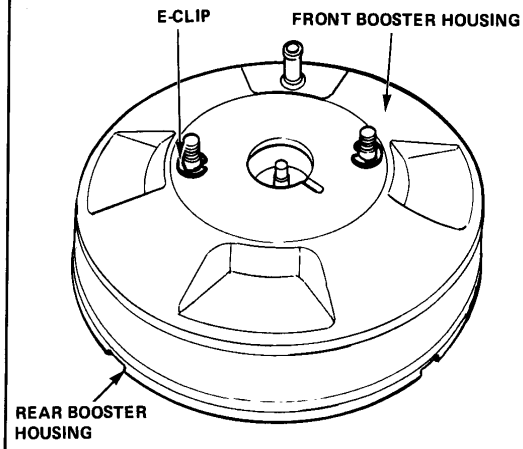

4. Remove the washers and seals from the rear.

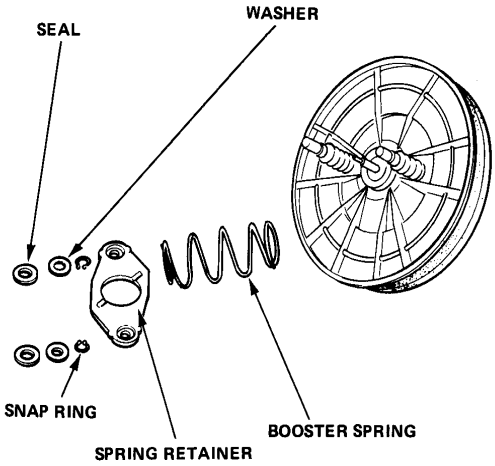

5. Remove the spring retainer and booster spring.

6. Remove the retainer and the through bolt boots.

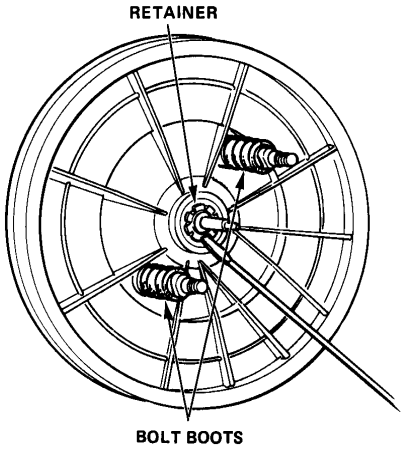

7. Remove the diaphragm from the rear housing.

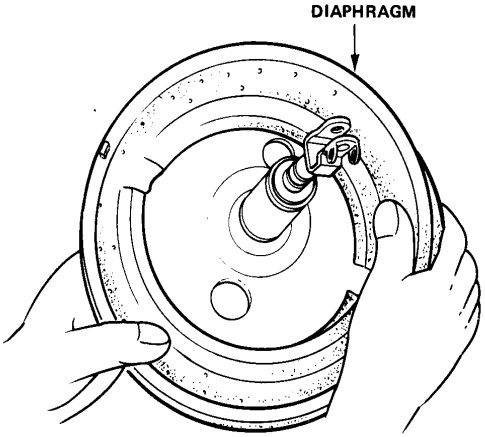

(cont'd)

Brake Booster

Disassembly (cont'd)

8. Remove the yoke, push rod locknut, star locknut, adjuster and filter.

9. Remove the snap ring, then remove the valve holder assembly.

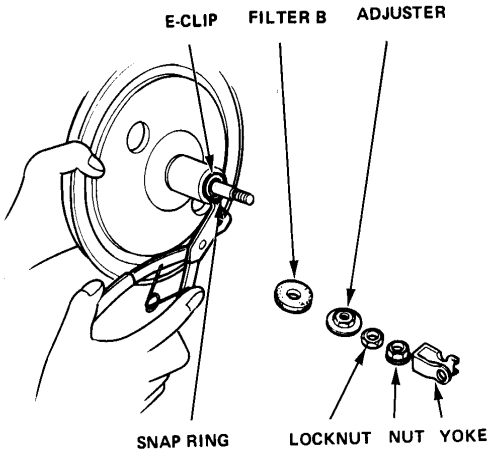

10. Remove the E-clip from the valve holder assembly and disassemble.

Rebuild Kit

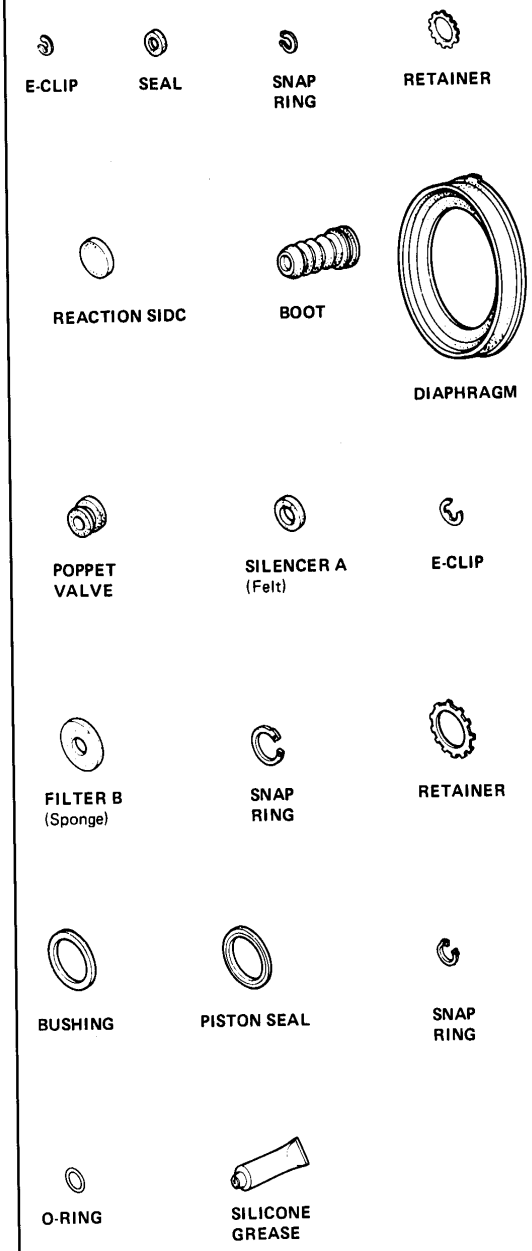

Reassembly

1. Install the poppet valve on the valve holder.

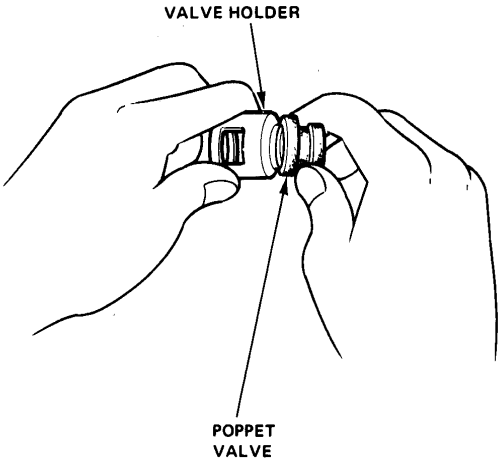

2. Install the valve holder, inner valve spring, outer valve spring, and spring seat onto the push rod.

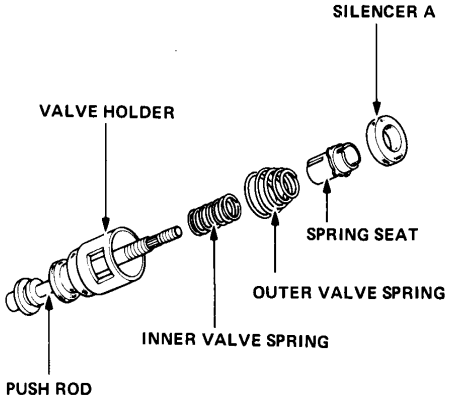

3. Install the silencer with the E-clip.

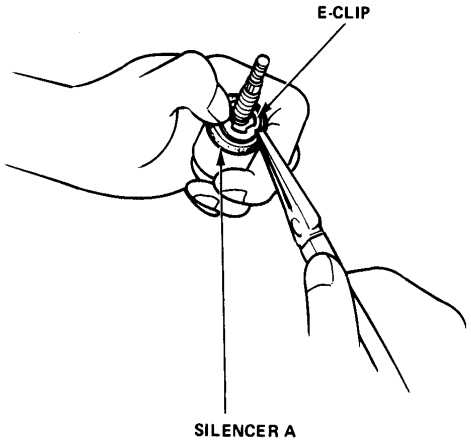

4. Install the diaphragm onto the booster piston with the diaphragm tabs aligned with the slots in the piston.

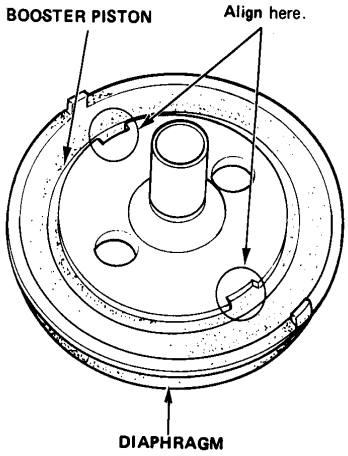

(cont'd)

Brake Booster

Reassembly (cont'd)

5. Apply silicone grease to the inner and outer surfaces of the piston tube.

   Press the valve holder assembly into the booster piston tube, and install the snap ring.

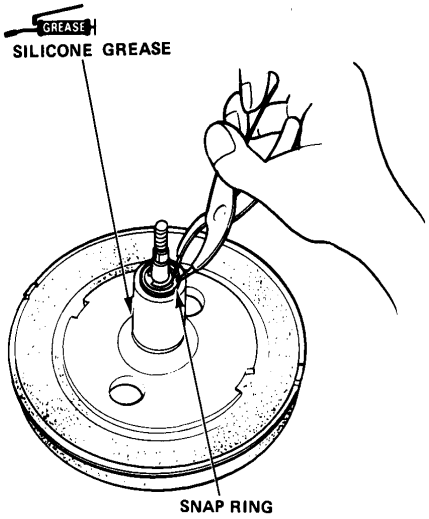

6. Slip the filter (foam) over the end of the pushrod. Thread the adjuster and locknut onto the shaft but do not tighten.

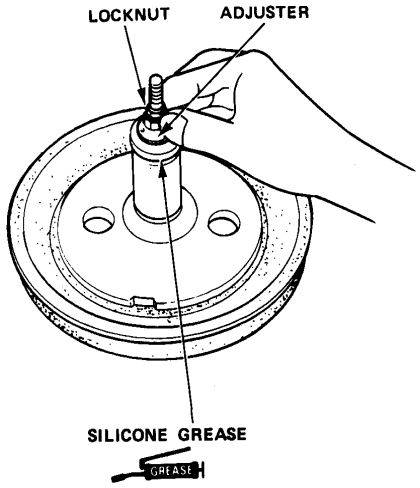

7. Apply silicone grease to the piston seal, then set the seal in position on the housing.

   NOTE: Make sure the lip of the seal is facing in, as shown in drawing below.

8. Install the piston seal and bushing in the rear housing, and gently drive the retainer in until it is 6 mm below the edge of the rear housing.

   CAUTION: If you drive in the retainer more than 6 mm, you may distort the piston seal.

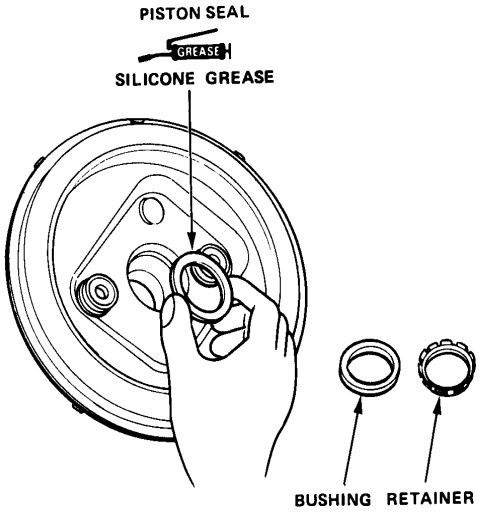

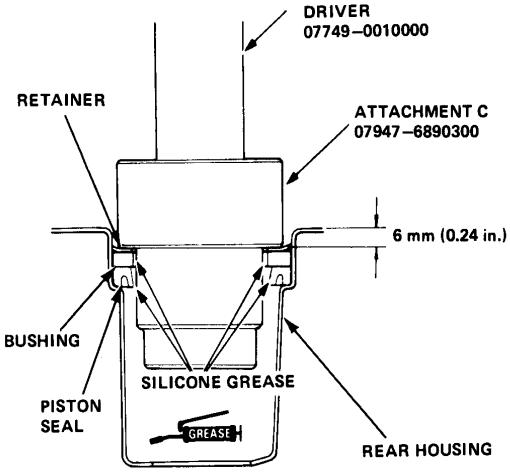

9. Install both through bolts, using the O-rings and snap rings.

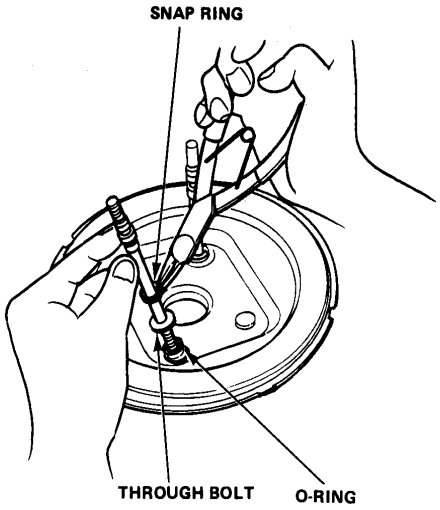

10. Attach the booster piston to the rear housing, aligning the tab of the booster piston with the slot in the rear housing.

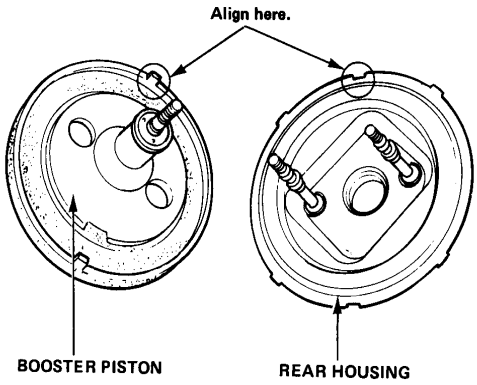

11. Intall the boots on the through bolts.

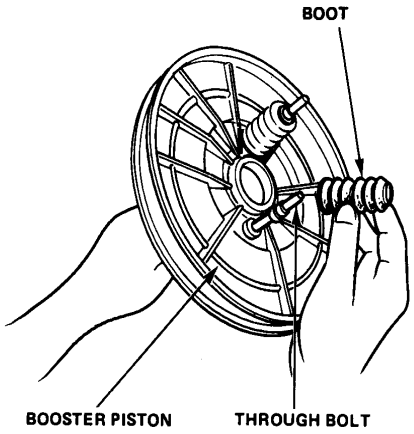

12. Apply silicone grease to the bore of the booster piston, then install the push rod seat, reaction disc, output-rod, and retainer.

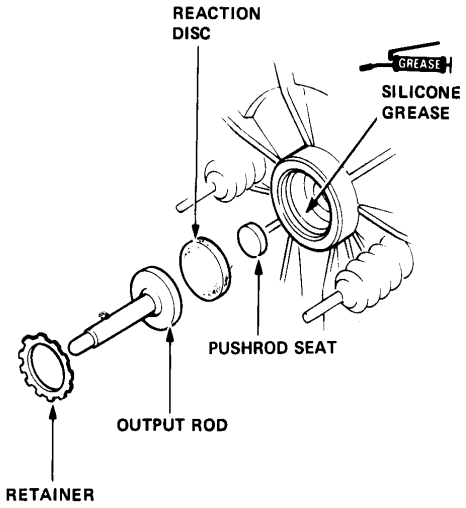

(cont'd)

Brake Booster

Reassembly (cont'd)

13. Install the booster spring.

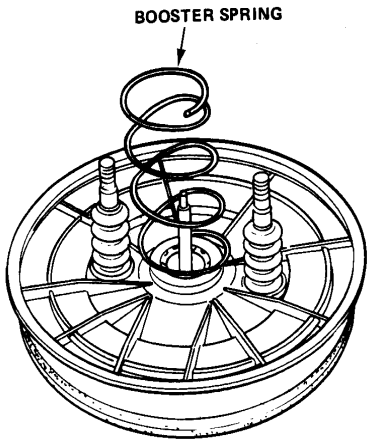

14. Install the spring retainer by compressing the booster spring, then installing the snap rings on the through bolts.

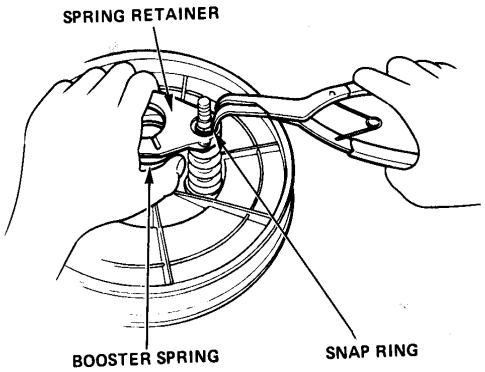

15. Install the washers and seals.

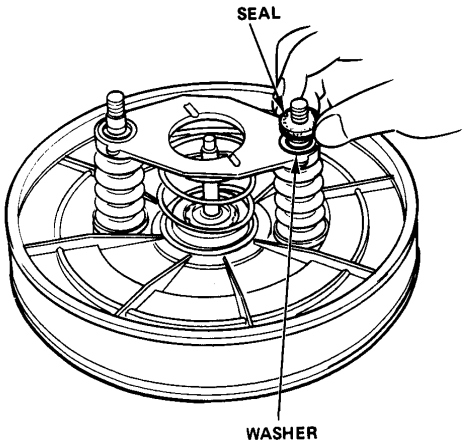

16. Assemble the front booster housing onto the rear booster housing, press down on the front housing, then install the E-clips on the through bolts.

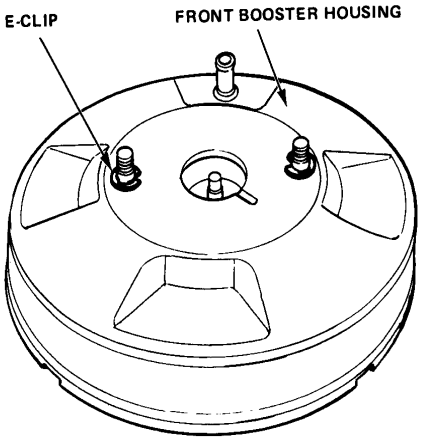

17. Adjust the pushrod clearance (page 21-23), and install the master cylinder.

Pushrod Clearance

Adjustment

NOTE: Master cylinder pushrod-to-piston clearance must be checked, and adjustments made if necessary, before installing master cylinder.

1. Using the Rod Bolt Adjustment Gauge, adjust bolt so the top of it is flush with end of master cylinder secondary piston.

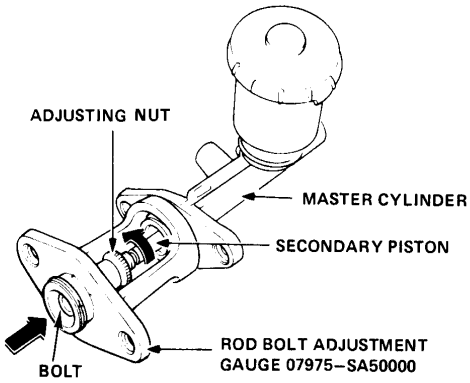

2. Without disturbing the adjusting bolt's position, put the gauge upside down on the booster.

3. Install the master cylinder nuts and tighten to the specified torque.

4. Connect a vacuum gauge (0-30 in. Hg.) between the booster and its vacuum supply, and maintain an engine speed that will deliver 500 mmHg (20 in.Hg) vacuum.

5. Measure the clearance between the gauge body and adjusting nut with a feeler gauge.

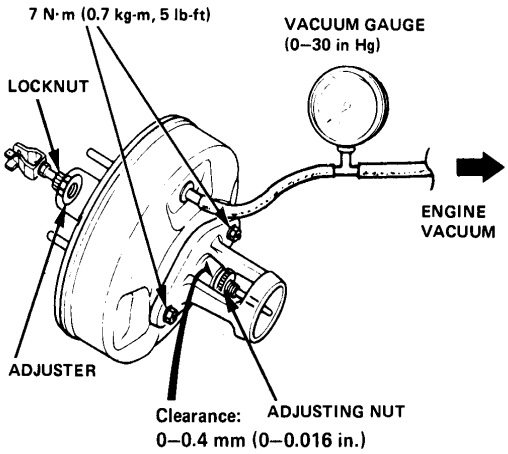

6. If clearance is incorrect, loosen star locknut and turn adjuster in or out to adjust.

7. Tighten locknut securely.

NOTE: If the clearance between the gauge body and adjusting nut is 0 mm, the pushrod-to-piston clearance is 0.4 mm. If the clearance between the gauge body and adjusting nut is 0.4 mm, the pushrod-to-piston clearance is 0 mm.

Rear Brakes

Index and Inspection

- **2WD**

WARNING

- Block the front wheels before jacking up the rear of the car.
- Do not use an air hose to blow the brake assembly clean. Use an OSHA-approved vacuum cleaner to avoid breathing the brake lining dust.

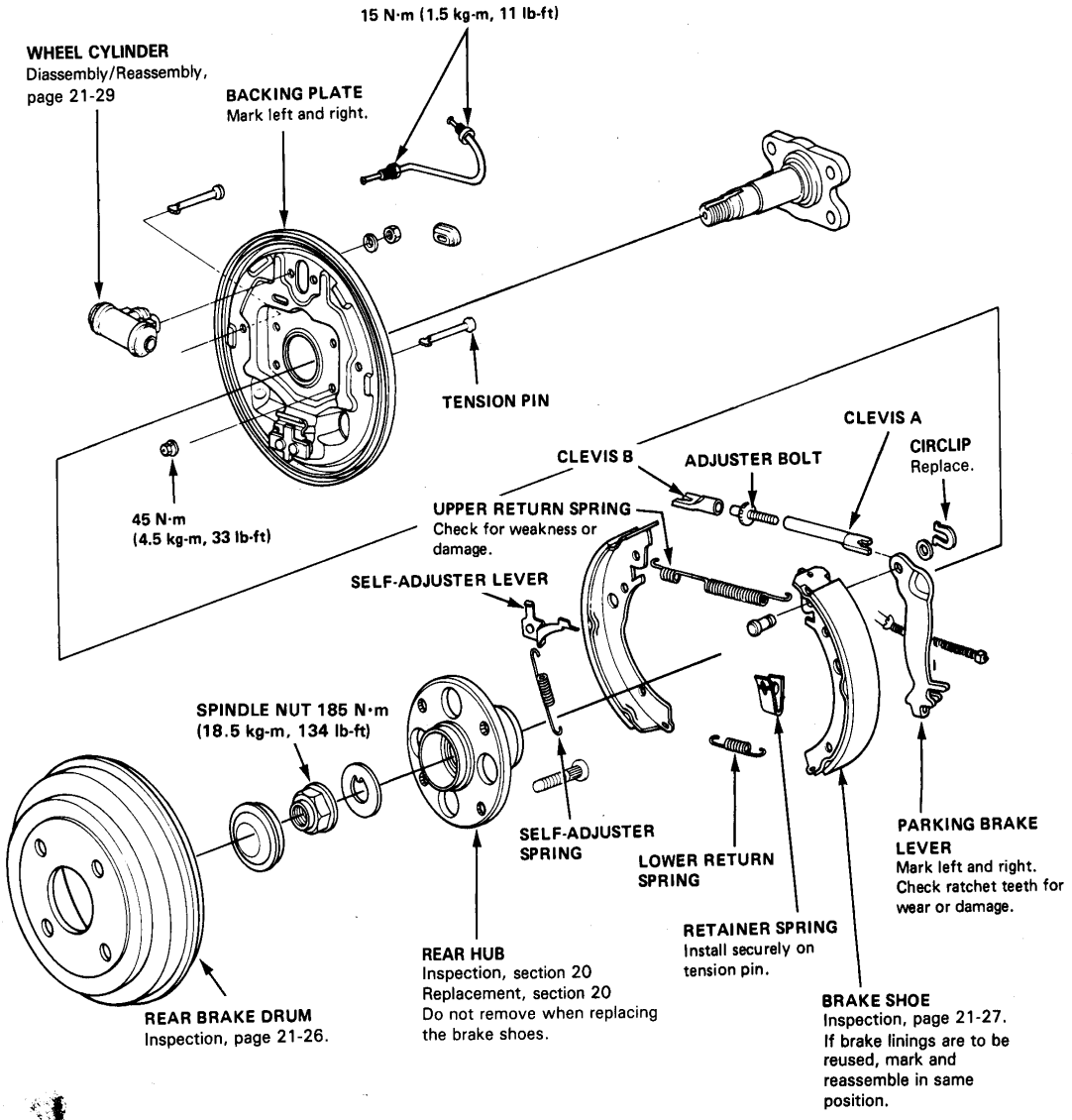

- **4WD**

WARNING

- **Block the front wheels before jacking up the rear of the car.**
- **Support the rear of the car with safety stands.**
- **Do not use compressed air to blow the brake assembly clean. Use am OSHA-approved vacuum cleaner to avoid breathing the brake lining dust.**

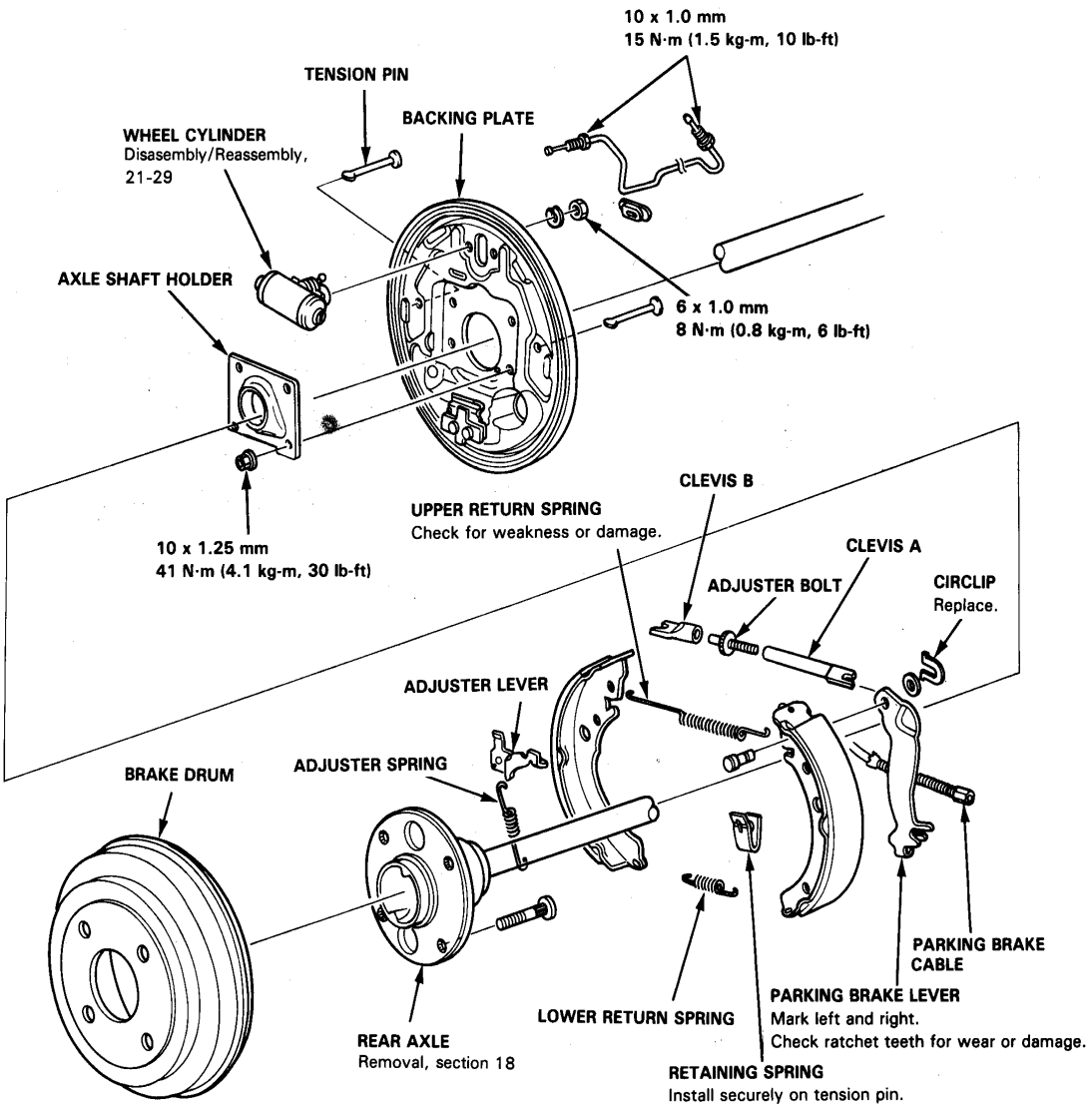

Rear Brakes

Inspection

1. Inspect the wheel cylinders for leakage.
2. Inspect the brake linings for cracking, glazing, wear or contamination.
3. Measure the brake lining thickness.

Lining Thickness
(Does not include brake shoe thickness)
Standard: 4.5 mm (0.177 in.)
Service Limit: 2.0 mm (0.079 in.)

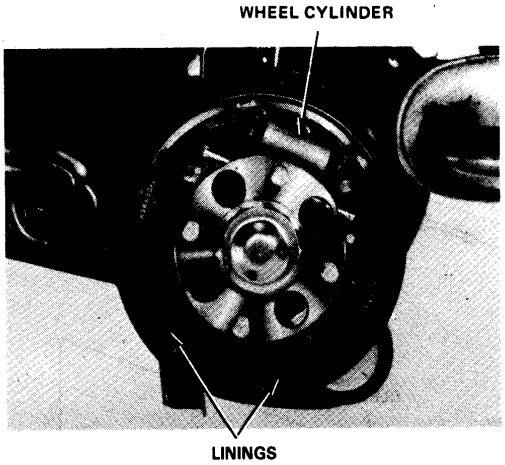

4. Measure the inside diameter of the brake drum at three points.

Drum Inside Diameter:
Standard: 180 mm (7.09 in.)
Service Limit: 181 mm (7.13 in.)

Wagon
Standard: 200 mm (7.87 in.)
Service Limit: 201 mm (7.91 in.)

NOTE: If the refinishing limit stamped on the drum does not match the one listed above, use the one on the drum.

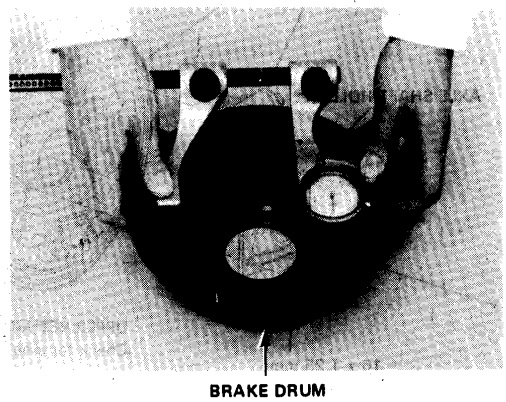

5. Inspect the brake drum for scoring, grooves, or cracks.

Brake Shoes

Removal

1. To remove the tension pins, push the retainer springs and turn them.

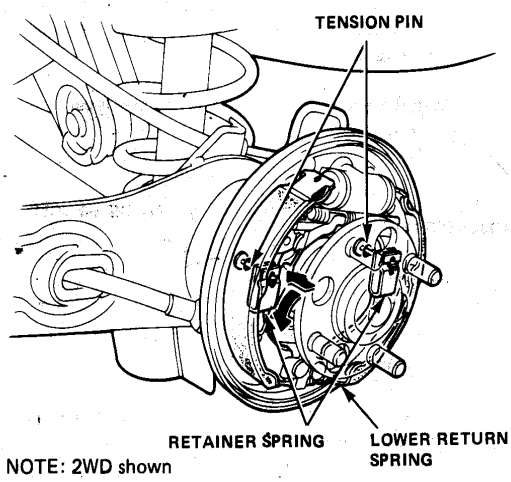

NOTE: 2WD shown

2. Lower the brake shoe assembly in order to clear the wheel cylinder, then remove the lower return spring.

   CAUTION: Do not damage the dust covers of the wheel cylinder.

3. Remove the brake shoe assembly by pulling it up over the hub.

4. Disconnect the parking brake cable from the parking brake lever.

5. Remove the upper return spring, then separate the brake shoes.

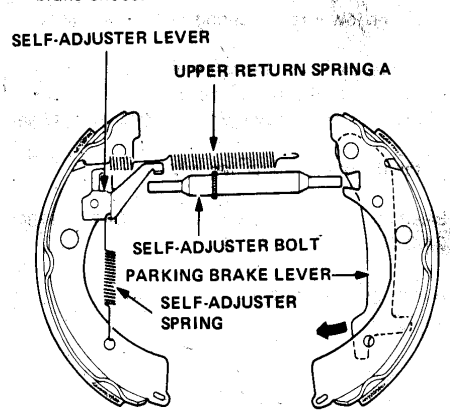

6. Remove the self-adjuster bolt, lever and spring.

7. Remove the parking brake lever.

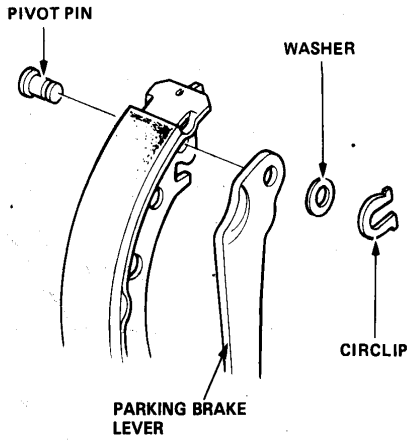

Brake Shoes

Installation

1. Fit the parking brake lever and secure it with the pivot pin, washer and circlip.

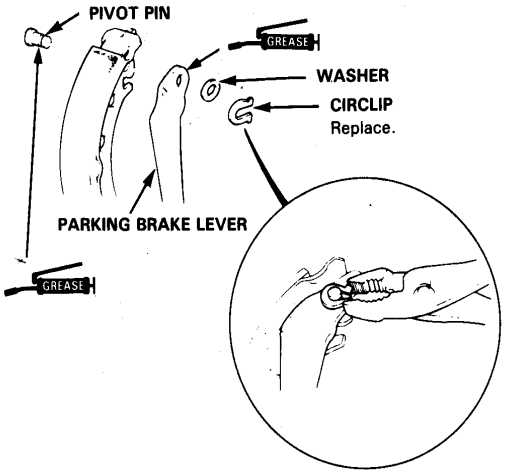

NOTE:
- Grease the pin and the end of the lever with high temperature rubber grease.
- Squeeze the circlip to secure it.

2. Fit the parking brake cable to the backing plate.

3. Connect the parking brake cable to the parking brake lever.

4. Apply grease on metal-to-metal contact areas, as shown.

CAUTION: Do not get grease or oil on lining surface.

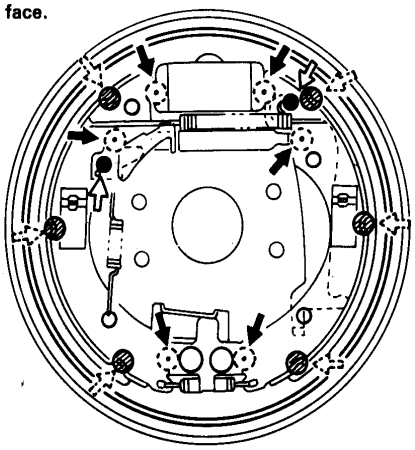

Greasing symbols:
- **Brake shoe ends**
- **Opposite the edge of the shoe**
- **Sliding surface**

5. Screw the adjuster bolt in until it stops.

NOTE: The right side adjuster bolt has left-hand threads, and the left side adjuster bolt has right-hand threads.

6. Hook the adjuster spring to the adjuster lever, then to the brake shoe.

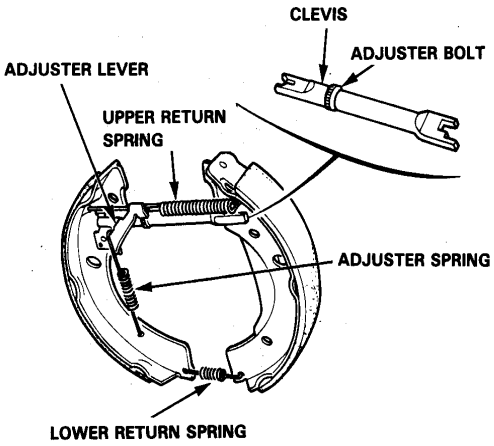

7. Install the clevises and upper return spring on the brake shoes as shown.

8. Fit the brake shoe assembly over the rear axle hub and onto the backing plate.

CAUTION: Make sure the wheel cylinder dust covers are not damaged during installation.

9. Hook the lower return spring to the brake shoes.

10. Fit the tension pins through their holes in the brake shoes, and fit the shoes into the grooves in wheel cylinder pistons. Secure with the retainer springs.

11. Install the brake drums and wheels.

12. Bleed and adjust the brakes as described on pages 21-3 and 10.

13. Adjust the parking brake.

Wheel Cylinder

Disassembly/Reassembly

WARNING **Avoid inhaling brake dust; wear a protective face mask if necessary, and throughly wash hands when finished.**

CAUTION:

- **Do not spill brake fluid on the car; it may damage the paint; if brake fluid does contact the paint, wash it off immediately with water.**
- **To prevent spills, cover the hose joints with rags or shop towels.**
- **Clean all parts in brake fluid and air dry; blow out all passages with compressed air.**
- **Before reassembling, check that all parts are free of dust and other foreign particles.**
- **Replace parts with new ones whenever specified to do so.**
- **Make sure no dirt or other foreign matter is allowed to contaminate the brake fluid.**
- **Do not mix different brands of brake fluid as they may not be compatible.**
- **Do not reuse the drained fluid.**

NOTE: Apply sealant to the backing plate contacting face of the wheel cylinder.

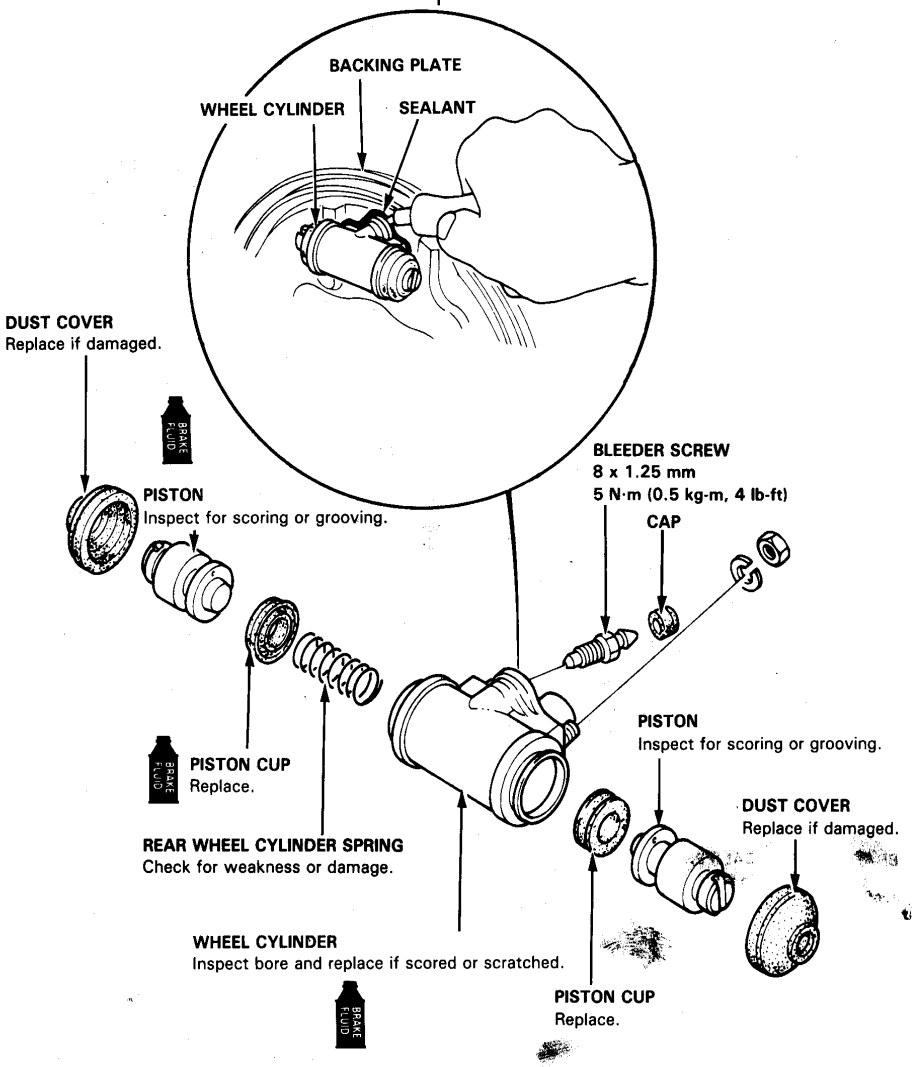

Brake Lines and Hoses

Inspection

1. Inspect the brake hoses for damage, leaks, interference or twisting.
2. Check the brake lines for damage, rusting or leakage.
   Also check for bent brake lines.
3. Check for leaks at hose and pipe joints or connections, and retighten if necessary.

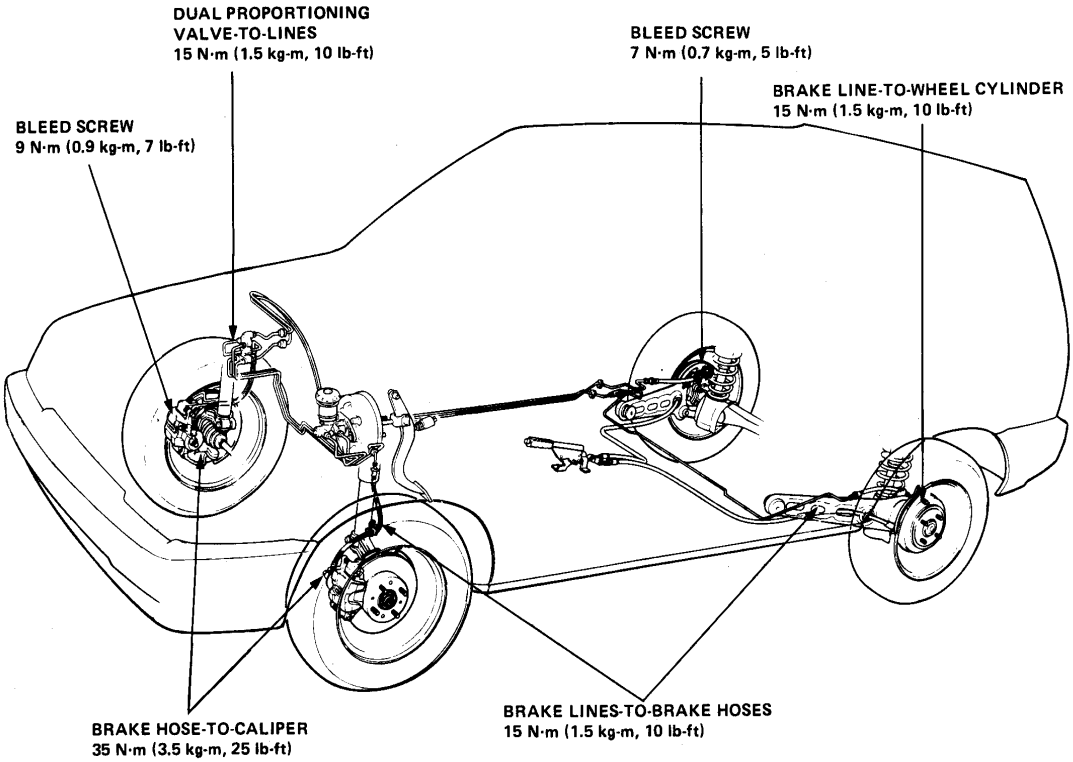

Parking Brake

Disassembly/Reassembly

Remove the parking brake cable from the backing plate using a 12 mm offset wrench as shown.

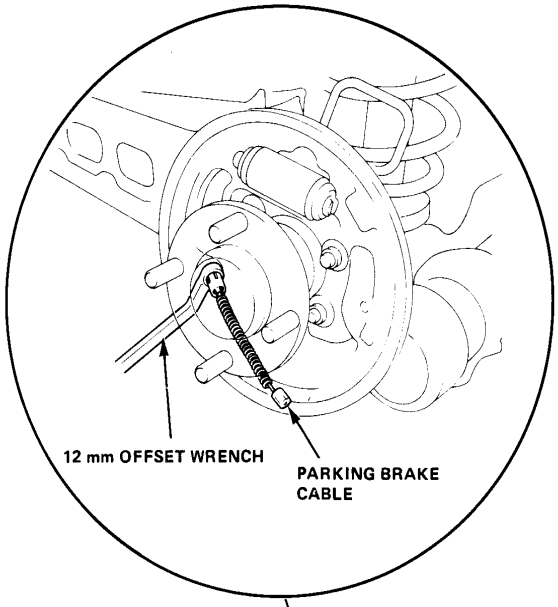

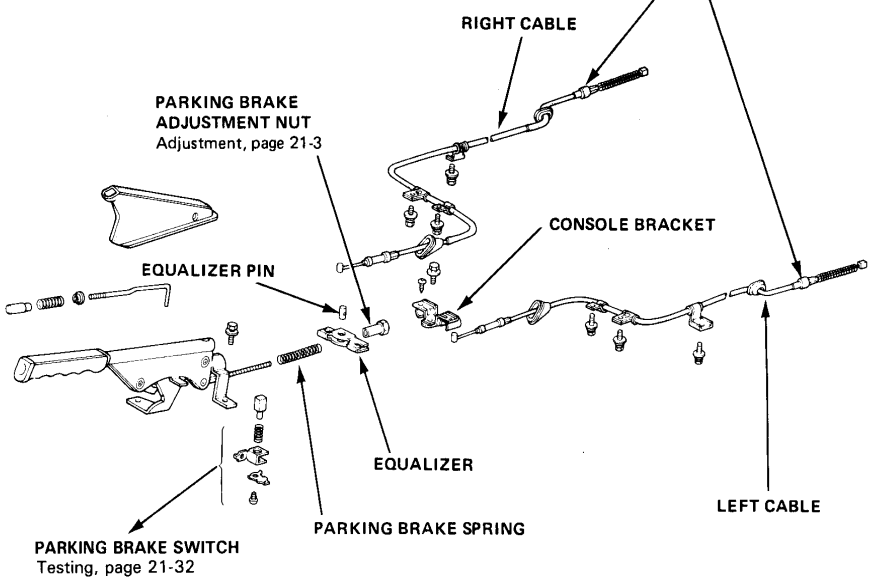

Parking Brake Switch

Testing

Attach one test probe of an ohmmeter to the switch, and the other to the body.

- With the brake lever up, there should be continuity.
- With the brake lever down, there should be no continuity.

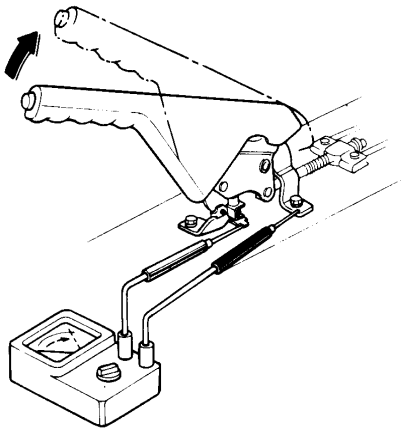

If continuity readings are incorrect, replace switch.

Brake Light Switch

Testing

Check for continuity between both terminals with an ohmmeter.

- With the switch plunger pushed in, there should be no continuity.
- With the switch plunger released, there should be continuity.

If no continuity, replace switch.

NOTE: If you replace the brake light switch, or change its position, readjust pedal height (page 21-3).

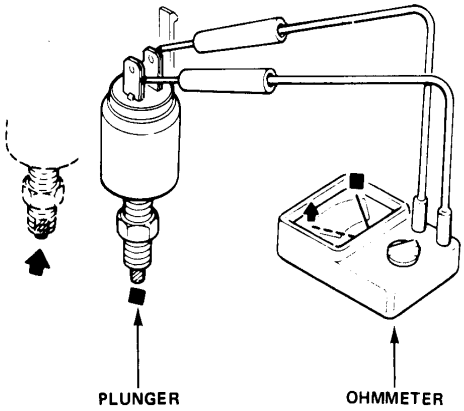

Warning System

Fluid Level Switch

A float level sensor switch is part of the cap on the master cylinder reservoir. When fluid level drops below limits, the switch is actuated by a magnet in the float which completes the ground circuit to the Fluid level/Parking brake Warning Light.

To check the brake fluid level switch:

1. Put the transmission in gear and release the parking brake.
2. Turn the ignition switch to II.
3. Remove the reservoir cap and lift the float level switch out of the reservoir.
4. Check that the Fluid level/Parking brake Warning Light turns on.

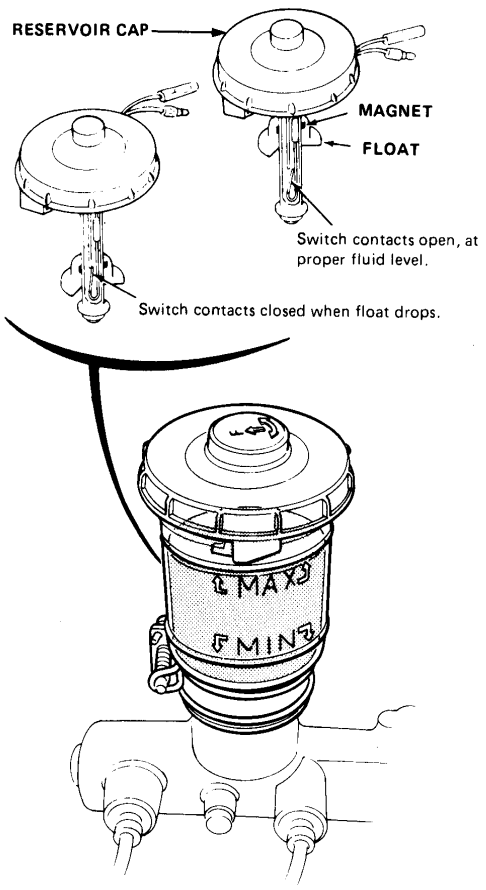

Warning Light

1. Be sure the brake master cylinder is full.
2. Set the parking brake, then turn the ignition switch to II. The Fluid level/Parking brake Warning Light should come on.
   - If it does not come on at all, check the fuse.
   - If the fuse is OK, check the fluid level switch (see the previous procedure), then check the bulb.
   - If the light still does not come on, check the parking brake switch.
3. Release the parking brake; the Fluid lever/Parking brake Warning Light should go out.
   - If the light does not go out, check the parking brake switch, fluid level switch and the bulb check relay.
4. Be sure the transmission is in neutral, then turn the key to III (start). The Fluid level/Parking brake Warning Light should come on again.
   - If the light does not come on, check the bulb check relay.

Body

Doors

Illustrated Index

Sedan Front Door:

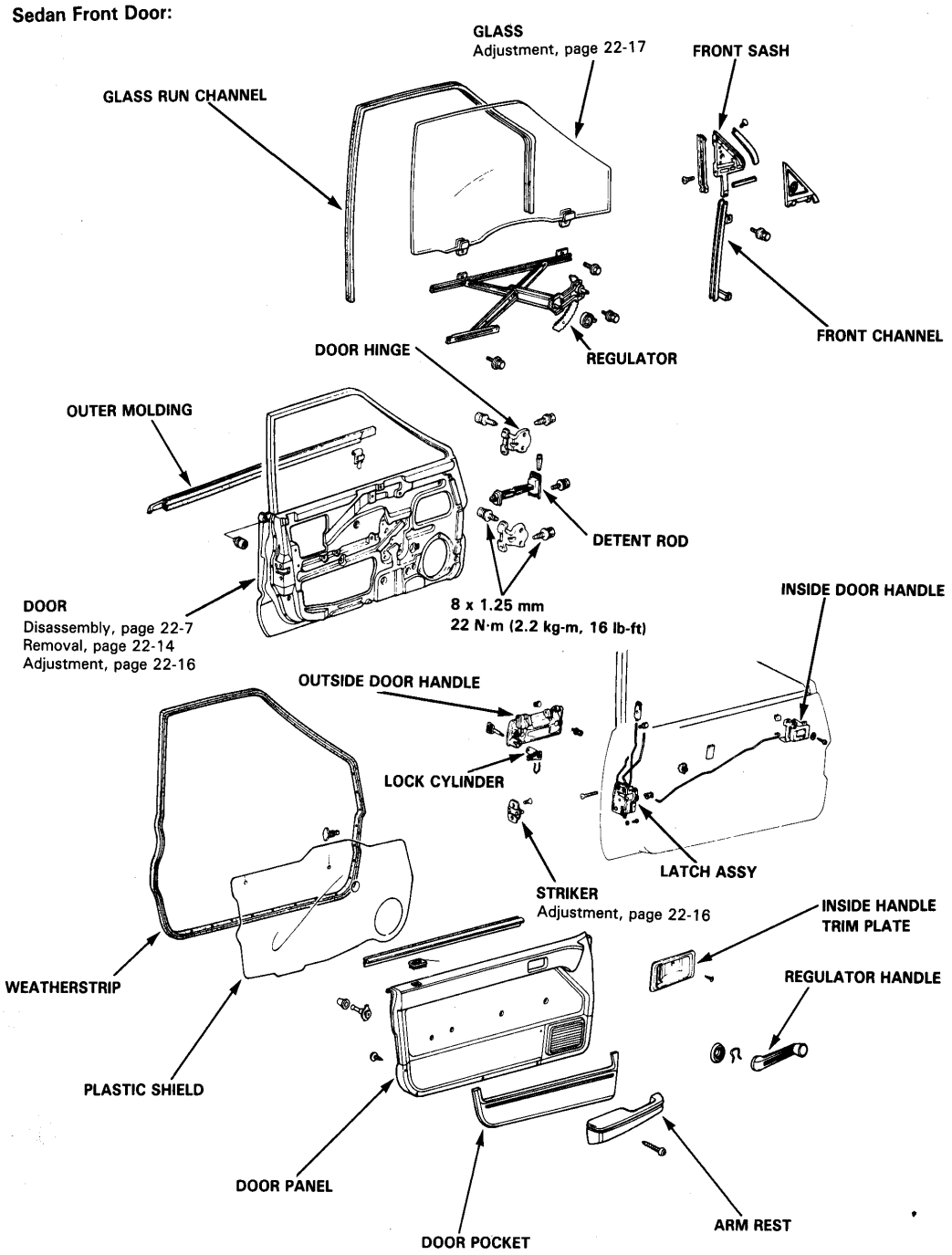

Sedan Rear Door:

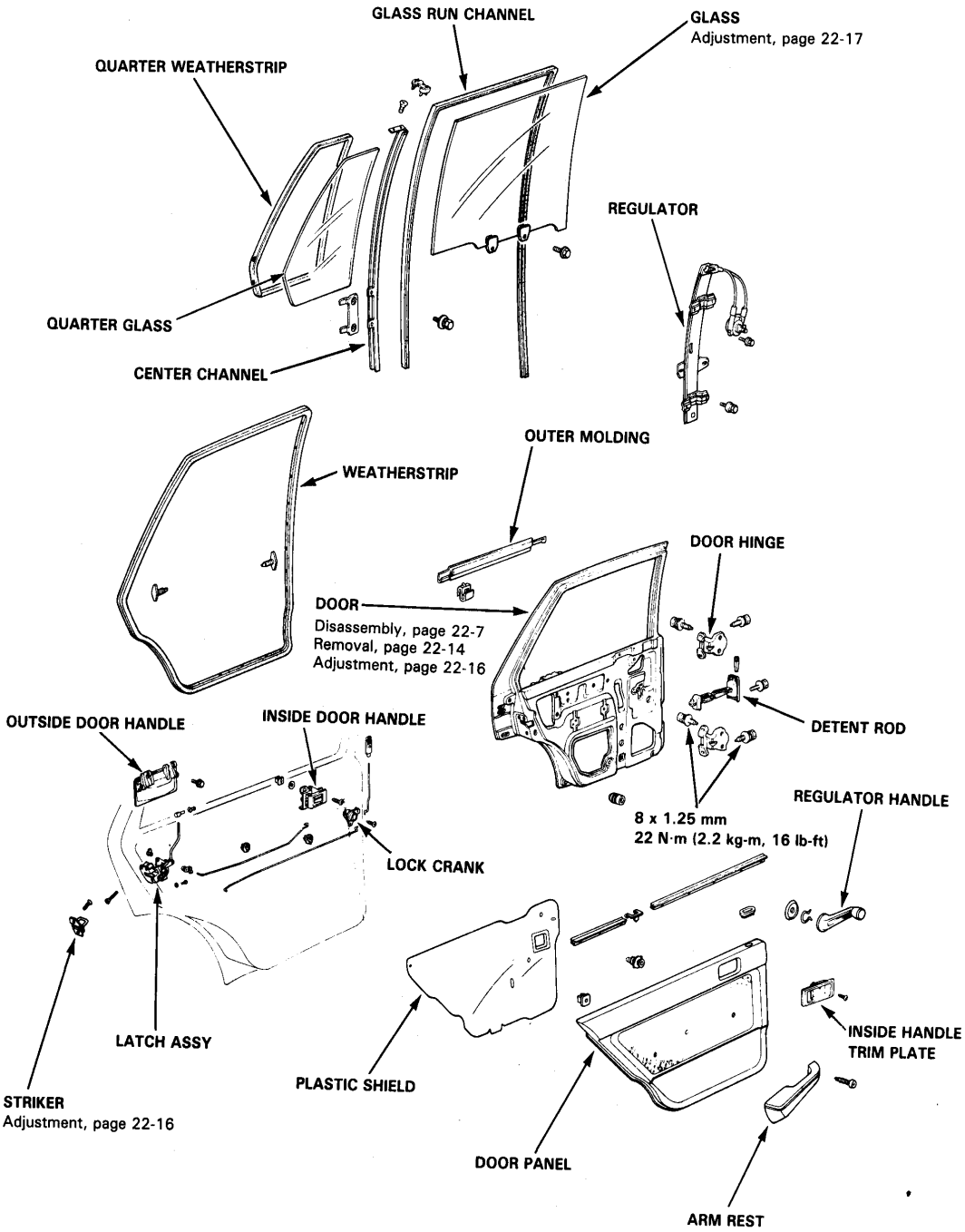

(cont'd)

Doors

Illustrated Index (cont'd)

Hatchback Front Door:

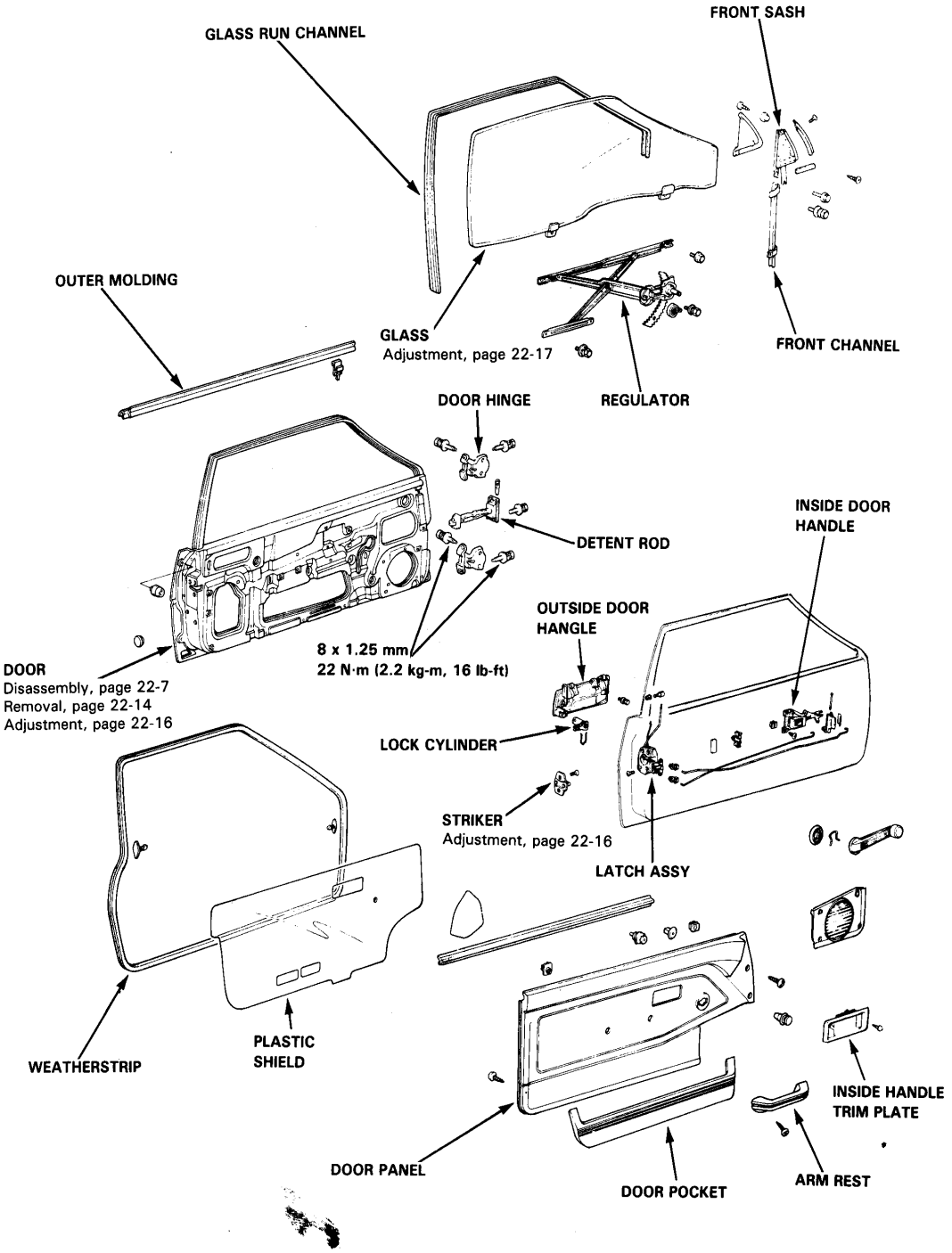

Wagon Front Door:

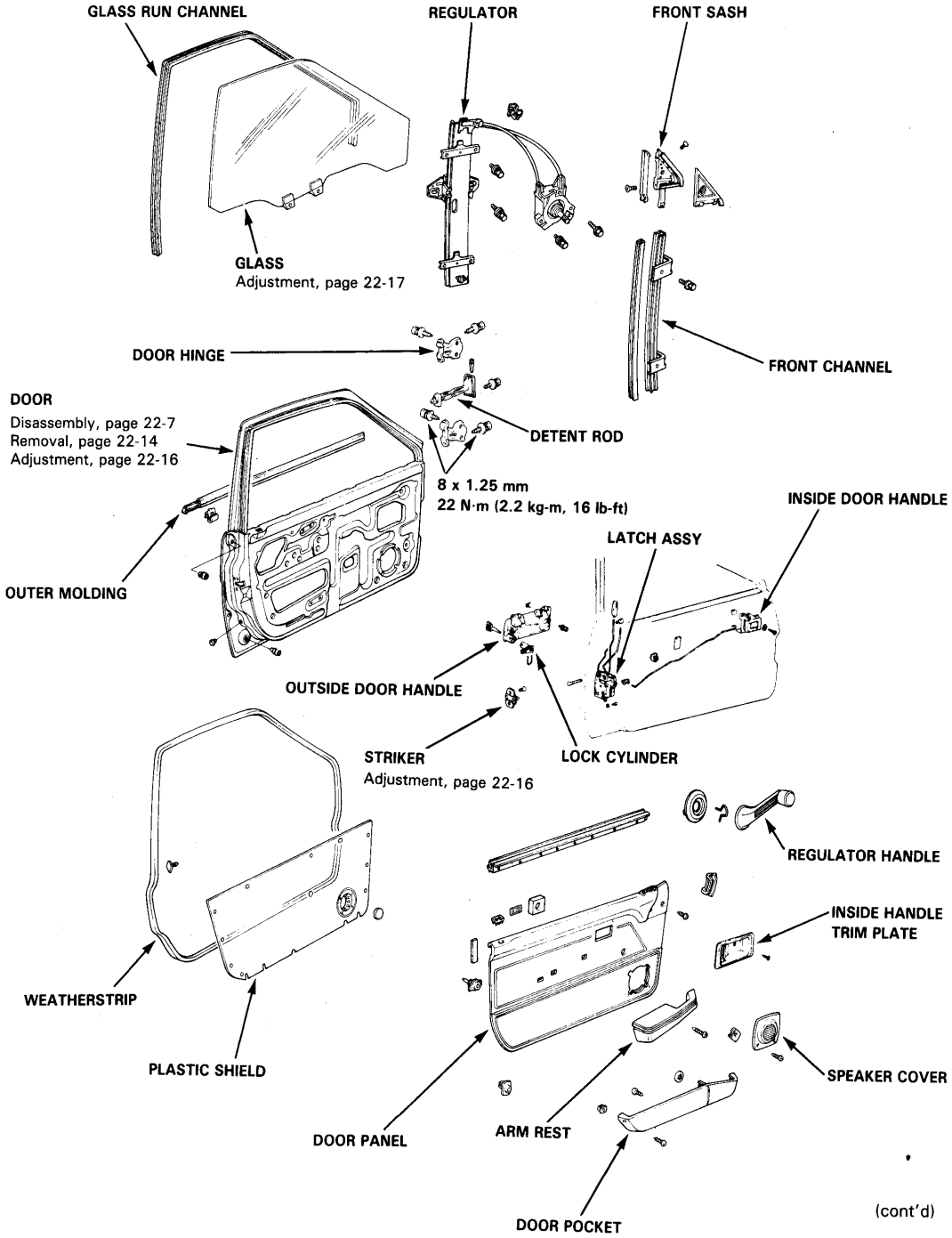

(cont'd)

Doors

Illustrated Index (cont'd)

Wagon Rear Door:

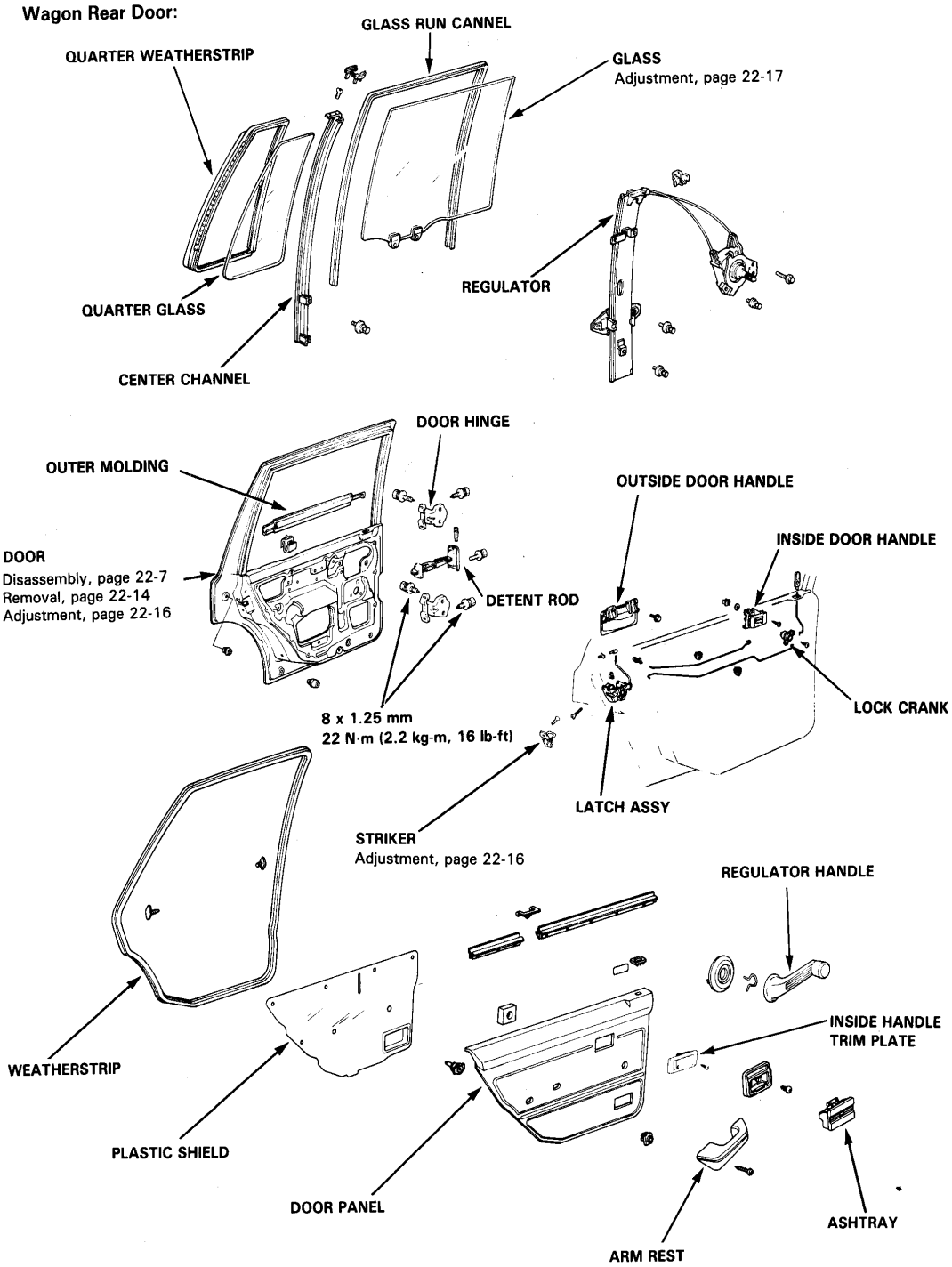

Disassembly

1. Pull the clip off with a wire hook. Remove the regulator handle.

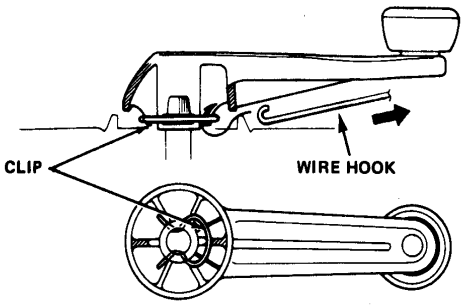

2. Remove the screw attaching the trim plate, then remove the trim plate carefully to avoid damaging it or its hook.

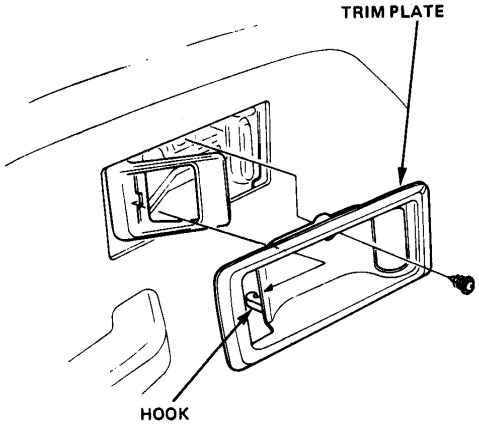

3. Remove the screws, then remove the arm rest.

Remove the caps and screws, then remove the speaker grille.

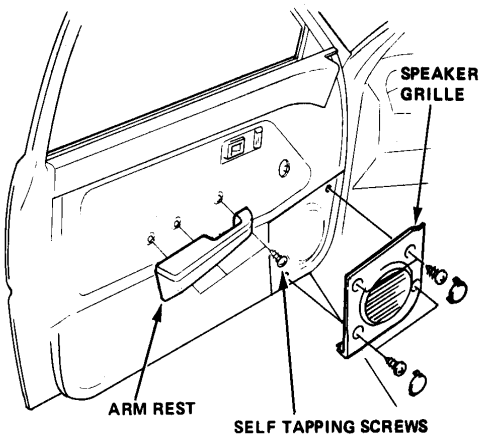

4. Remove the rear view mirror.

- Remove the screw and control knob.
- Carefully pry off the cover panel with a screwdriver to avoid damaging it, then while holding the mirror with one hand remove its 3 screws with the other.
- Remove the mirror from the door.

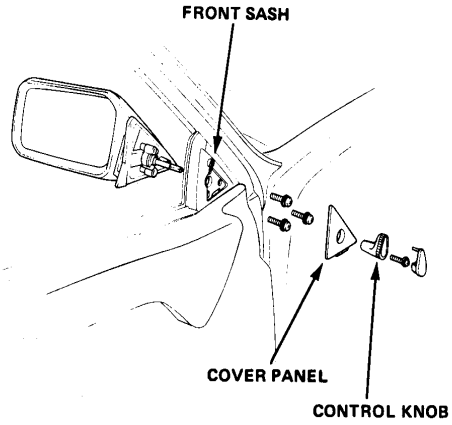

(cont'd)

Doors

Disassembly (cont'd)

5. To remove the door panel, first remove all retaining screws (see drawings), then insert a stiff putty knife between the panel and the plastic shield, slide it around the edge until it hits a retainer clip, then pry it up sharply to remove the clip. Repeat at all clip locations until the panel is free, then lift it straight up off the window sill.

   NOTE: Remove the panel with as little bending as possible to avoid creasing or breaking it.

Door Panel Release Tool

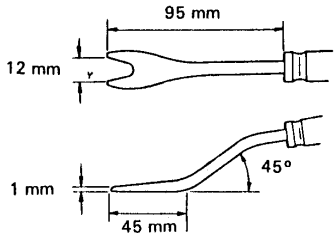

○ : **Screw Locations**
△ : **Clip Locations**

Sedan Front Door:

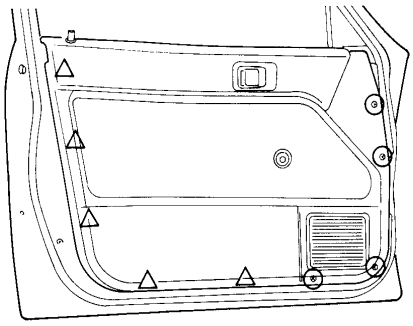

Sedan Rear Door:

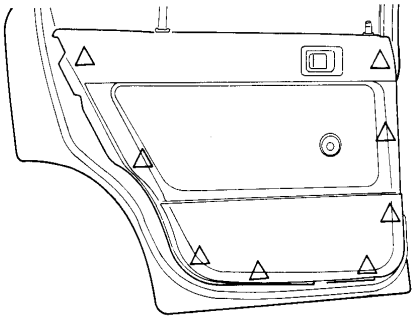

Hatchback Front Door:

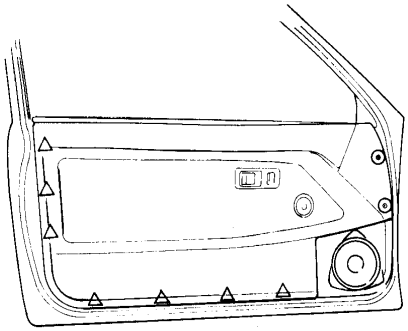

Wagon Front Door:

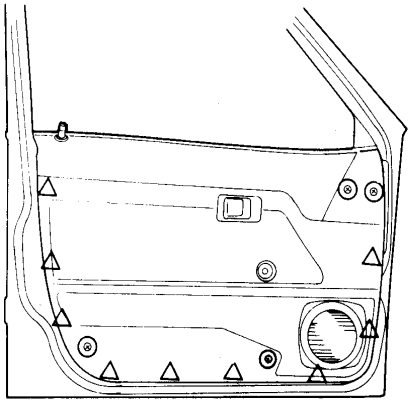

Wagon Rear Door:

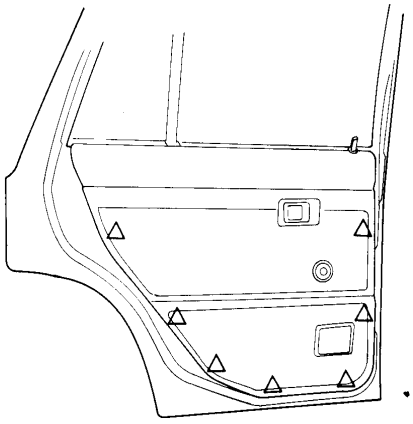

6. Peel off the plastic shield without tearing it, then remove the screws, then remove the inside door handle and the speaker bracket.

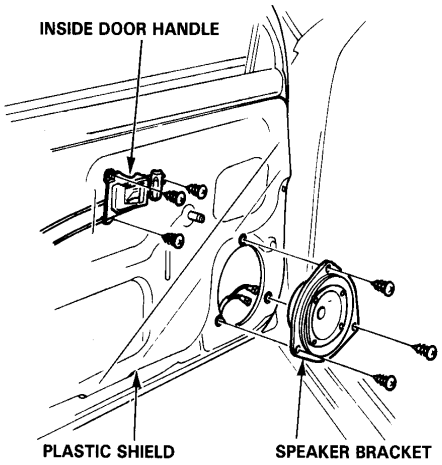

7. Remove the outside door handle mounting bolts for other models.

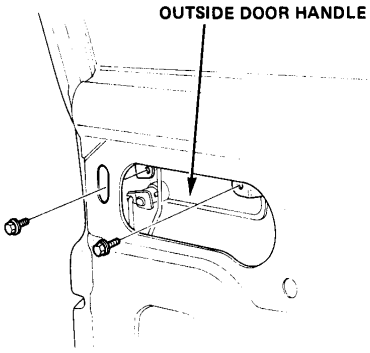

8. On the front doors, pull out the retainer, and take out the lock cylinder, then disconnect the lock cylinder and rod.

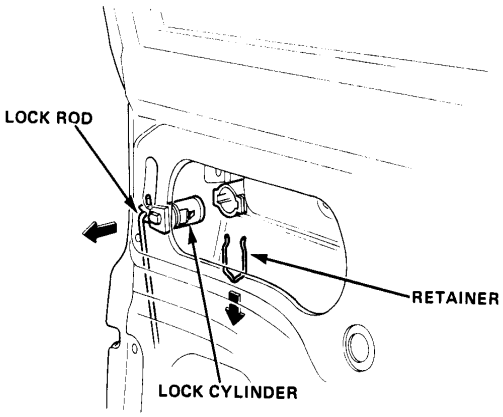

9. On the rear doors, remove the screws and then the lock crank, then disconnect the lock crank and rods.

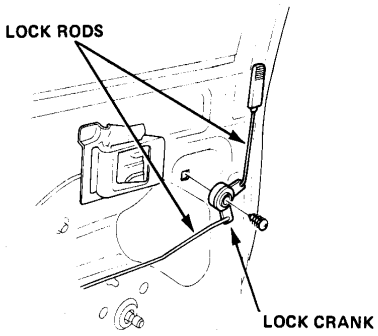

(cont'd)

Doors

Disassembly (cont'd)

10. Remove the screws and take the door latch off the door, then push the door latch and rod inside the door.

    NOTE: When moving the door latch, take care not to bend the rod excessively.

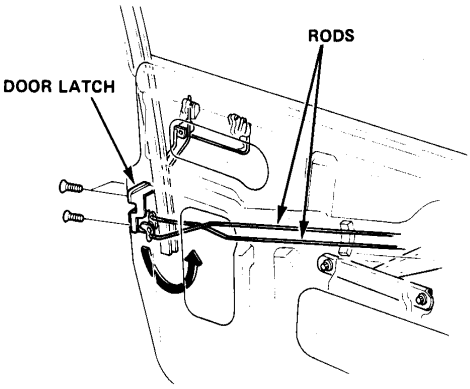

11. Pull the outside handle out, then unscrew it off the latch rod.

    NOTE:
    - To avoid scratching the door, put some tape around the opening.
    - Note the location of the handle on the rod before removing.

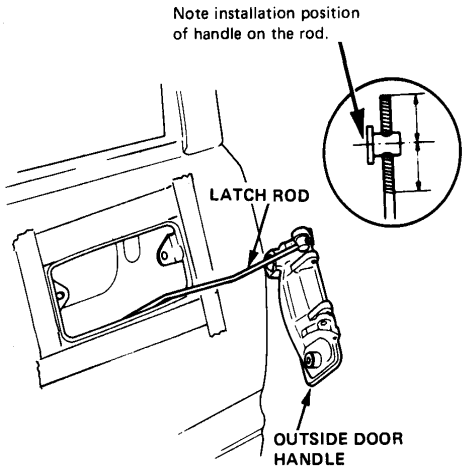

12. To remove the outer molding, life straight up off the window sill.

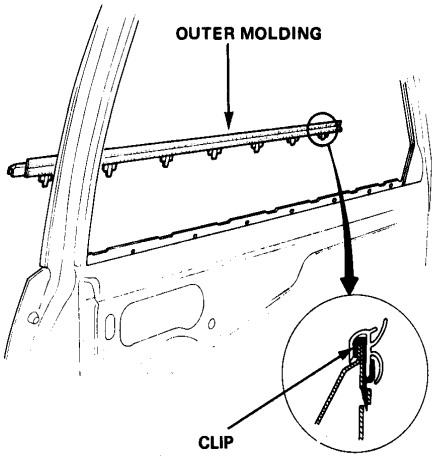

13. On the rear doors, remove the screws and bolts securing the center channel, then remove the quarter glass from the door sash.

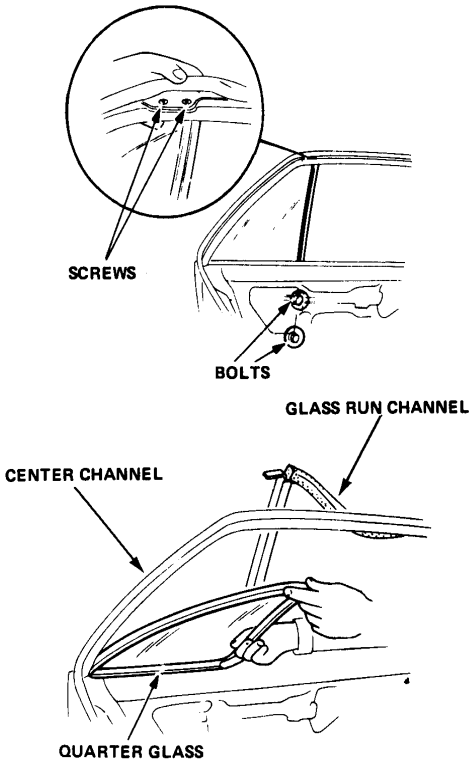

14. Carefully lower the door glass until you can see its mounting bolts.

Sedan and Hatchback Front Doors:

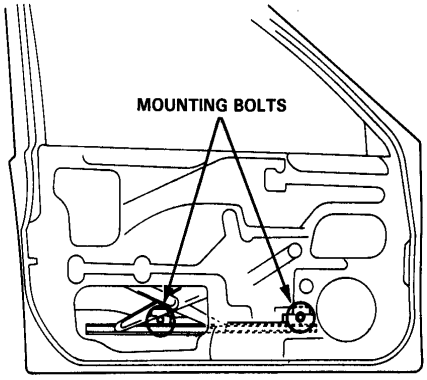

Wagon Front Doors:

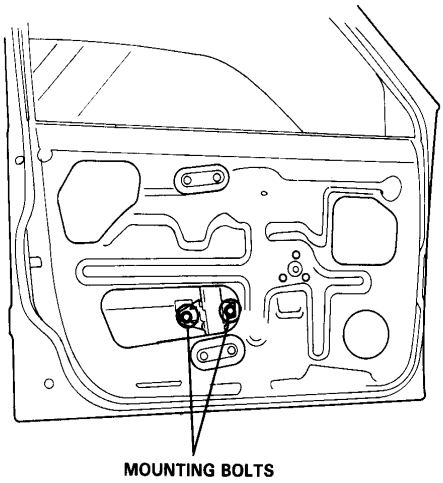

Sedan, and Wagon Rear Doors:

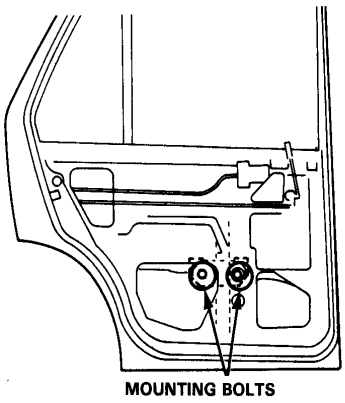

15. Stand next to the inside of the door, tilt the door glass as shown, and pull it out through the window slot.

CAUTION: To avoid damaging the door glass, store it in a safe place.

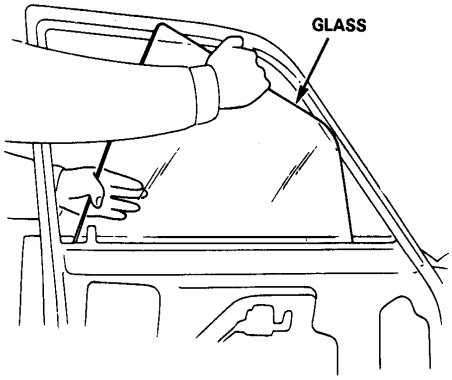

(cont'd)

Doors

Disassembly (cont'd)

16. Remove the regulator mounting bolts, then take out the regulator assembly through the lower hole in the door.

Sedan and Hatchback Front Doors:

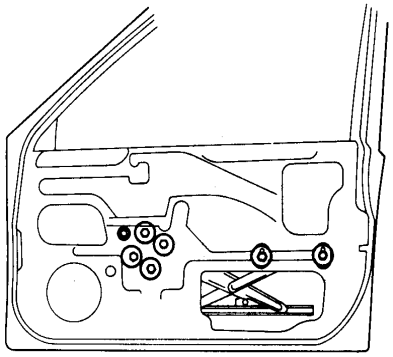

NOTE: Inspect for regulator gear wear, damage, spring slackness, loose linkage, etc. Replace parts as necessary.

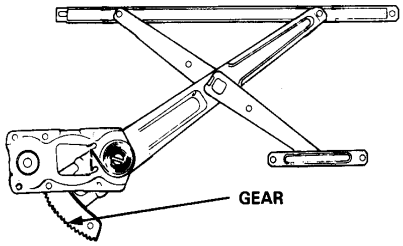

Wagon Front Doors:

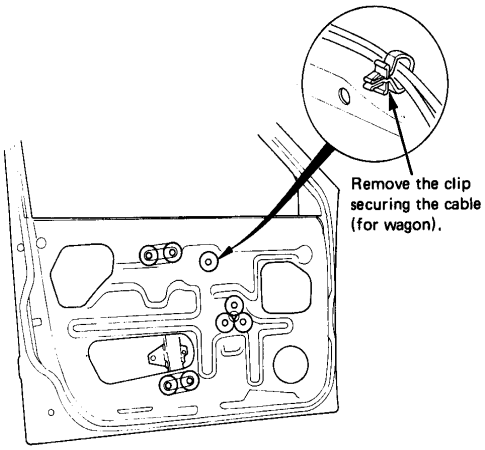

Sedan and Wagon Rear Doors:

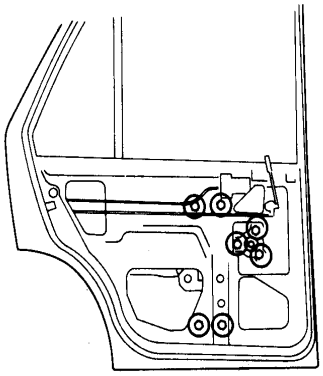

NOTE: Inspect the regulator cables for wear, damage, or worn guides. Also check that the carrier plate isn't loose. Replace parts as necessary.

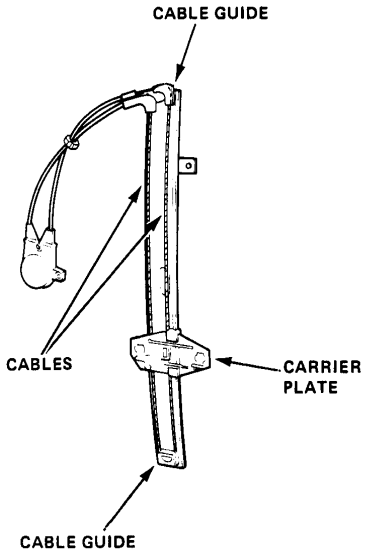

17. Remove the front channel.

Remove the 2 bolts and the 2 screws.

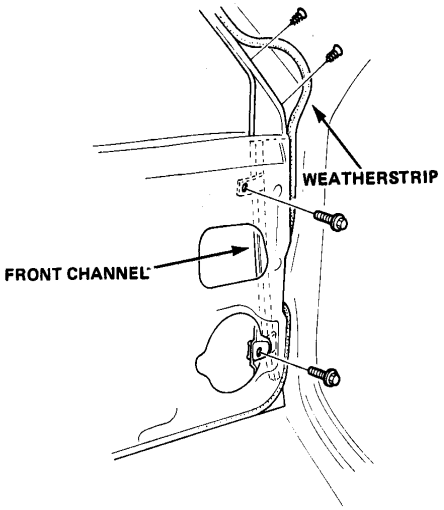

18. For Hatchback only, remove the screws and then the door sash garnish.

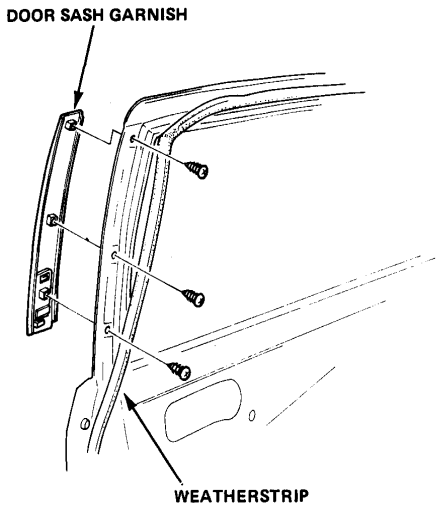

19. Remoe the moldings as shown.

Door Sash and Center Molding Removal:

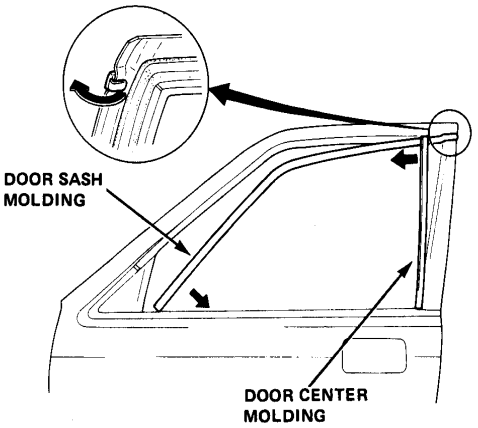

Door Corner Molding Removal:

Front Doors

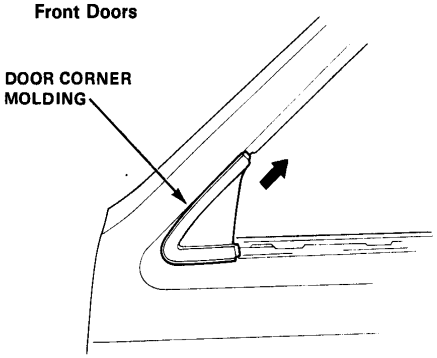

Rear Doors

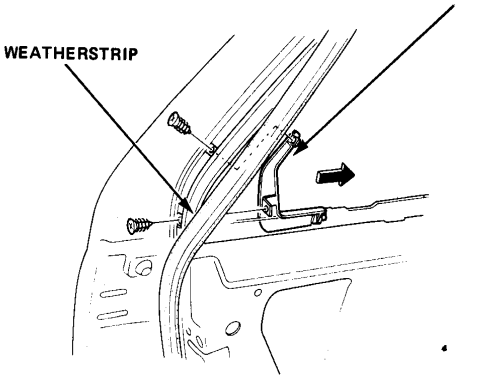

(cont'd)

Doors

Disassembly (cont'd)

20. Remove the plastic nuts from inside and remove the door side molding.

Sedan and Wagon:

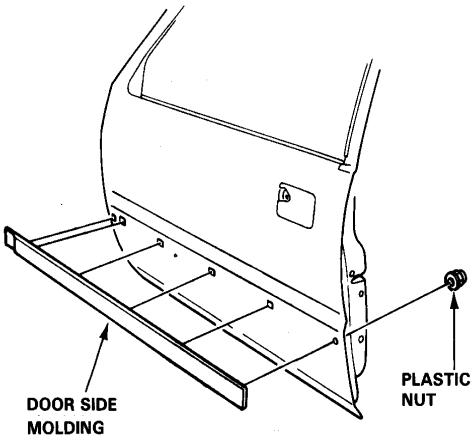

Hatchback:

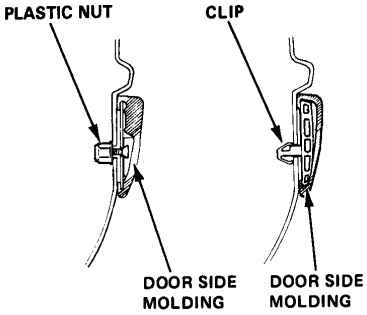

Removal

1. Cover the platform of a floor jack with several rags, then support the weight of the door with the jack.

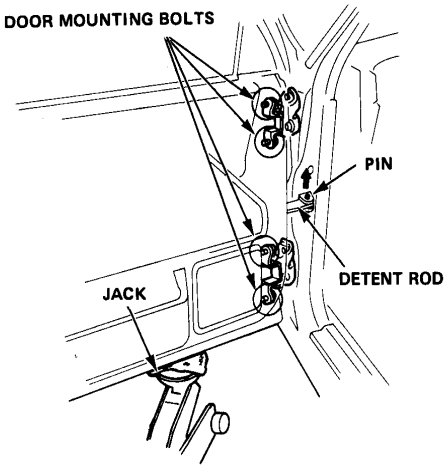

2. Use a hammer to drive the pin out of the detent rod.
3. With a helper balancing the door on the jack, remove the upper and lower door mounting bolts.
4. If necessary, remove the hinge mounting bolts, and remove the hinges.

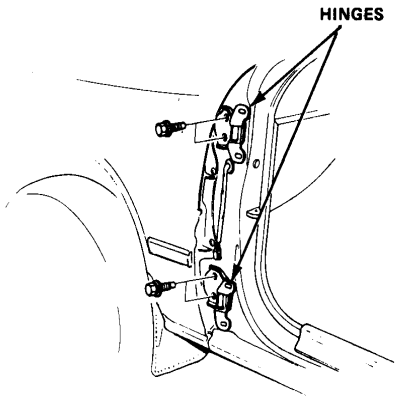

Assembly

Assemble the door in the reverse order of disassembly, and also:

1. Grease all the sliding surfaces of the window regulator where shown.

Sedan and Hatchback Front Doors:

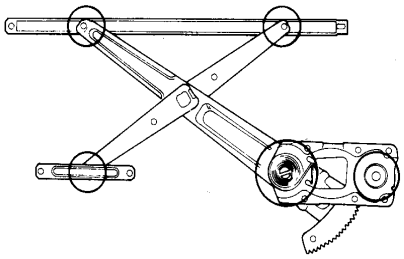

Wagon Front Door/Sedan and Wagon Rear Doors:

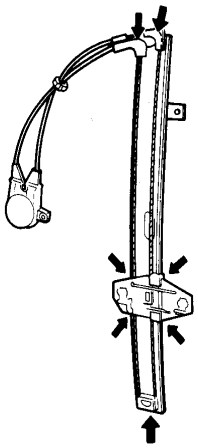

2. Roll the glass up and down to see if it moves freely without binding. Also make sure that there is no clearance between the glass and the door sash when the glass is closed. Adjust the position of the door glass as necessary (page 22-17).

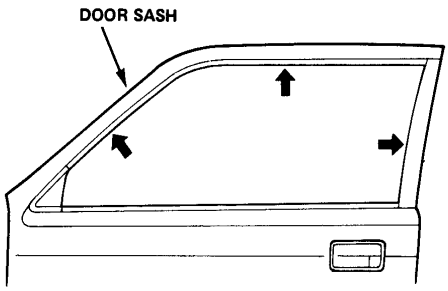

3. When reinstalling the plastic shield, apply adhesive along the edge where necessary to maintain a continuous seal and prevent air/water leaks.

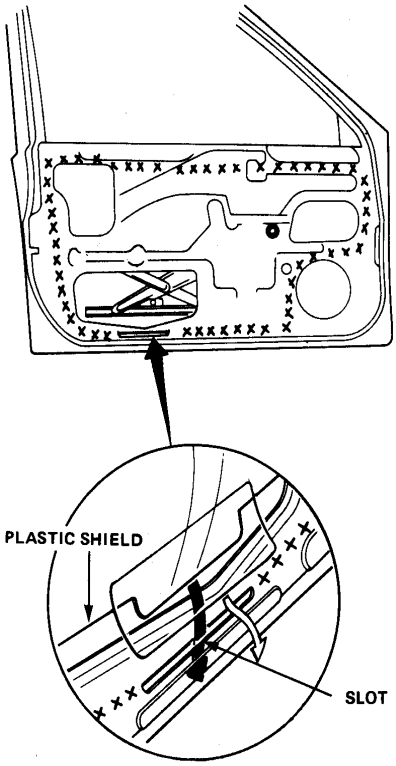

NOTE: Insert the shield into the slots where adhesive is not applied.

4. Install the regulator handle so it points forward, and up at a 45 degree angle with the window closed.

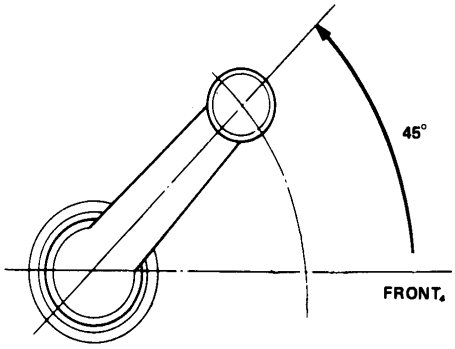

Doors

Door Position Adjustment

After installing the door, check for a flush fit with the body, then check for equal gap between the front and rear, and top and bottom door edges and the body. The door and body edges should also be parallel. Adjust at the hinges as shown.

CAUTION: Place a rag or shop towel on the jack to prevent damage to the door when the hinge bolts are loosened for adjustment.

HINGE MOUNTING BOLTS
8 x 1.25 mm
22 N·m (2.2 kg-m, 16 lb-ft)
Loosen the bolts, and move the door BACKWARD or FORWARD, UP or DOWN as necessary to equalize the gaps.

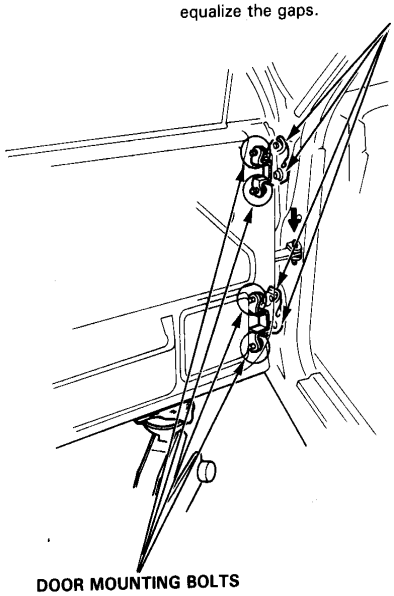

DOOR MOUNTING BOLTS
8 x 1.25 mm
22 N·m (2.2 kg-m, 16 lb-ft)
Loosen the bolts slightly tomove the door IN or OUT until flush with the body. If necessary, you can install a shim behind one hinge to make the door edges PARALLEL with the body.

Door Striker Adjustment

Make sure the door is not loose, and latches securely without slamming. If it needs adjustment:

1. Draw a line around the striker plate for reference.
2. Loosen the striker screws, and move the striker IN or OUT to make the latch fit tighter or looser. Move the striker UP or DOWN to align it with the latch opening. Then lightly tighten the screws and recheck.

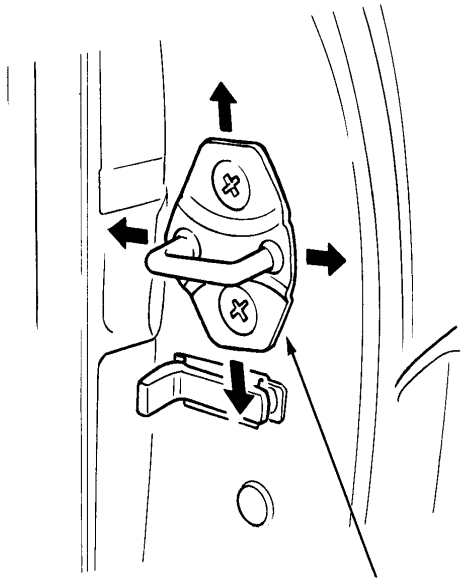

STRIKER

NOTE: Hold the outside handle out and push the door against the body to be sure the striker allows a flush fit.

3. If the door latches properly, tighten the screws and recheck.

Glass Adjustment

If the glass does not fit evenly in the window opening channel when closed:

1. Loosen the regulator roller guide bolts (for arm type regulator), or the guide rail bolts (for cable type regulator).
2. Roll the glass all the way up, sliding it forward or backward until it fits properly.
3. Retighten the bolts.

Sedan and Hatchback Front Doors:

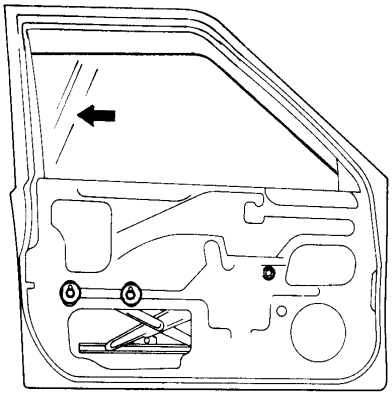

Sedan Rear Doors:

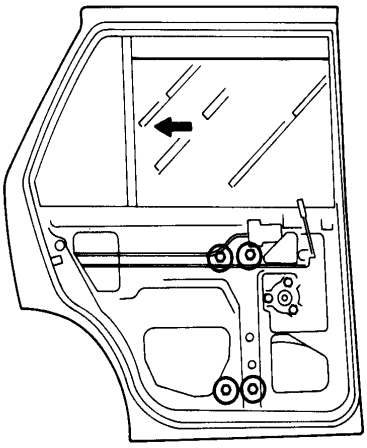

Wagon Front Doors:

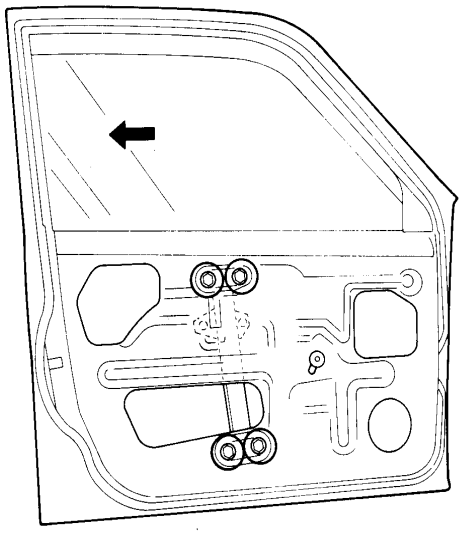

Wagon Rear Doors:

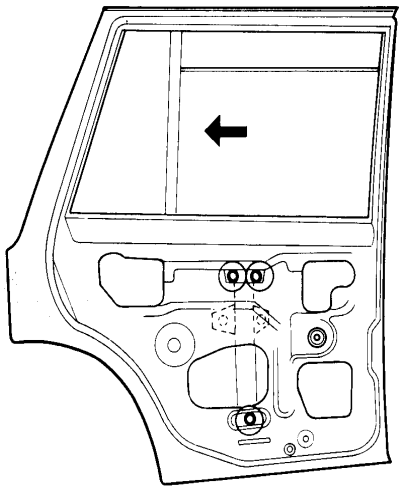

Doors

Mirror Glass Replacement

1. Insert a screwdriver in the mirror through the service hole, and loosen the glass retaining screws.

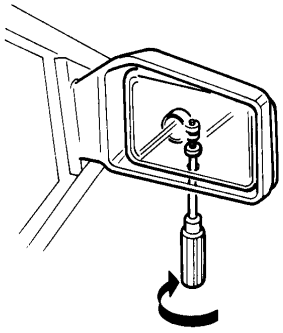

2. Carefully pry out the mirror with a screwdriver as shown.

CAUTION: To prevent damage to the mirror, wrap the end of the screwdriver with a rag or shop towel.

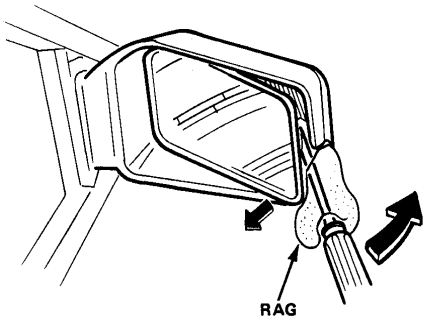

3. Install the mirror in the reverse order of removal, and also apply grease to the location indicated by the arrow.

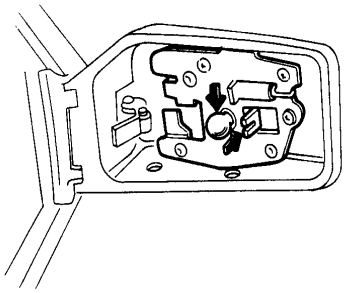

Windshield and Rear Windows

Illustrated Index

Sedan:

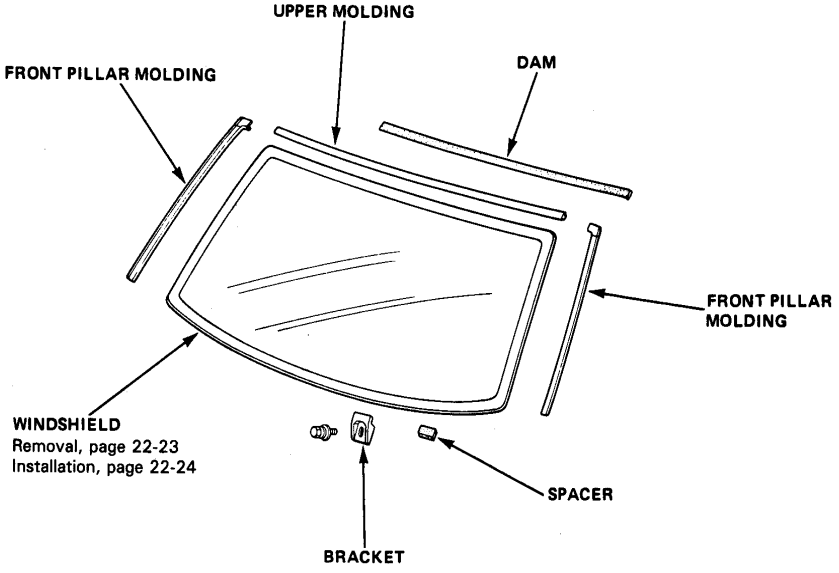

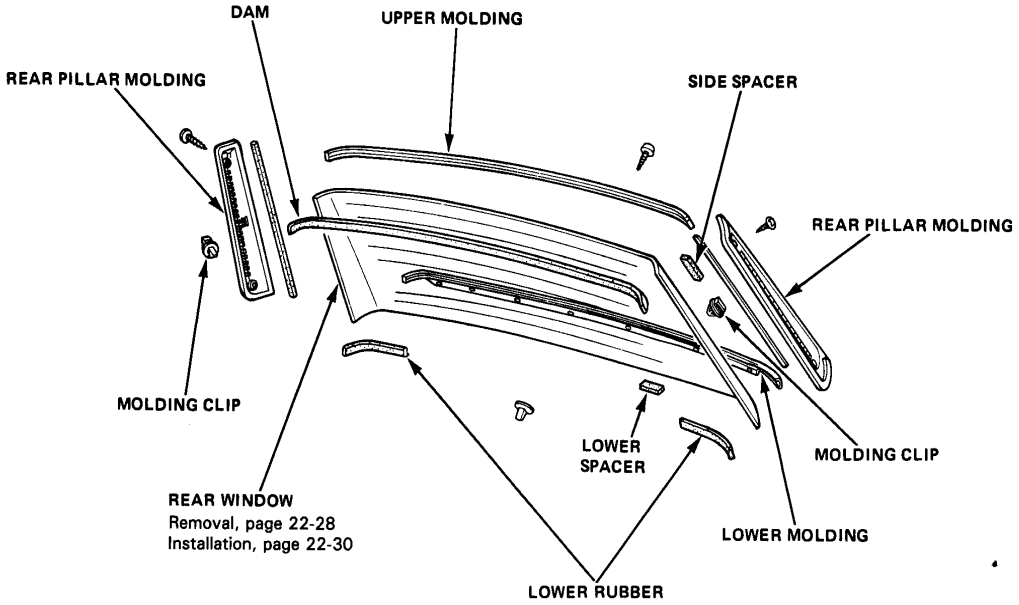

(cont'd)

Windshield and Rear Windows

Illustrated Index (cont'd)

Hatchback:

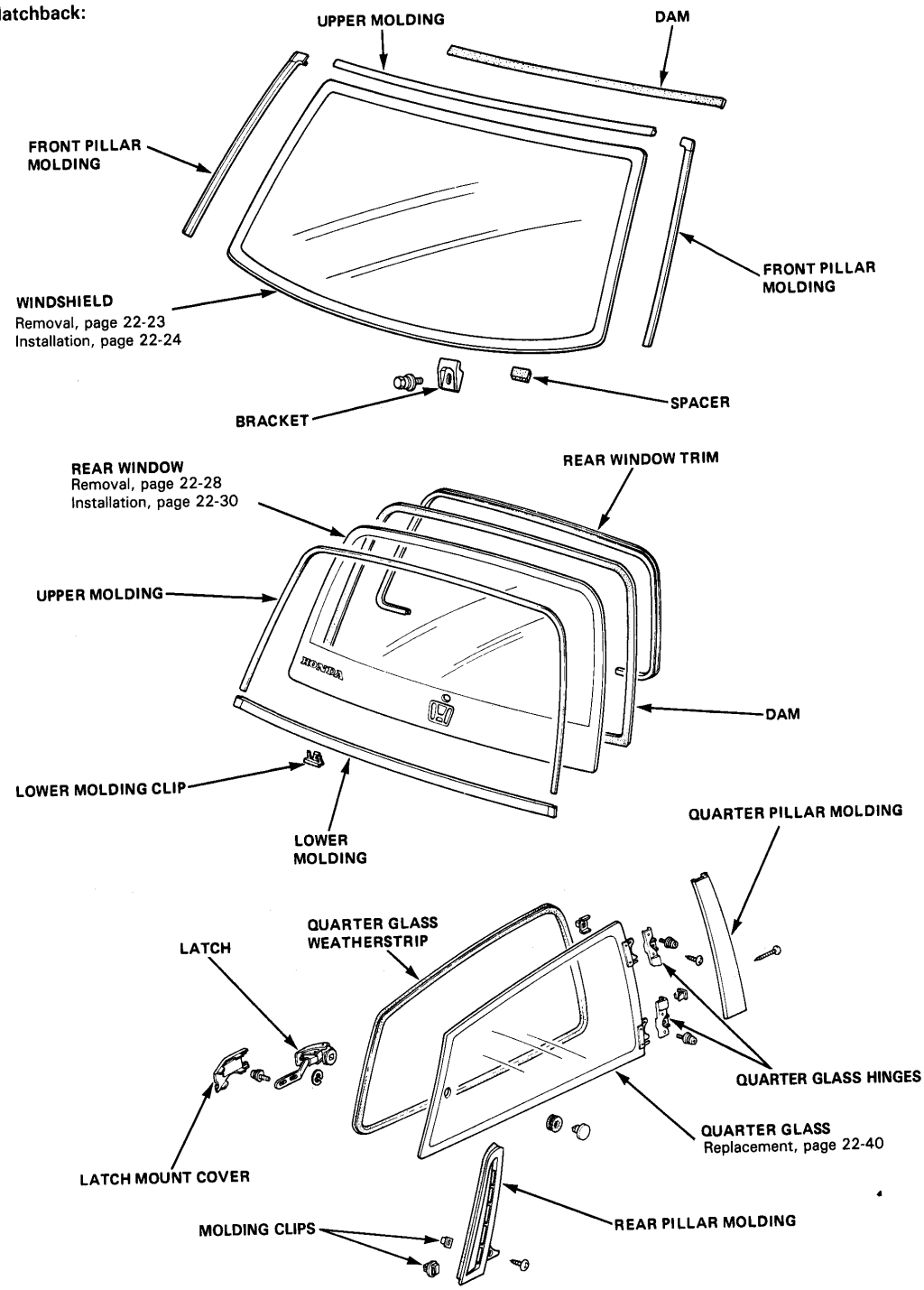

Wagon:

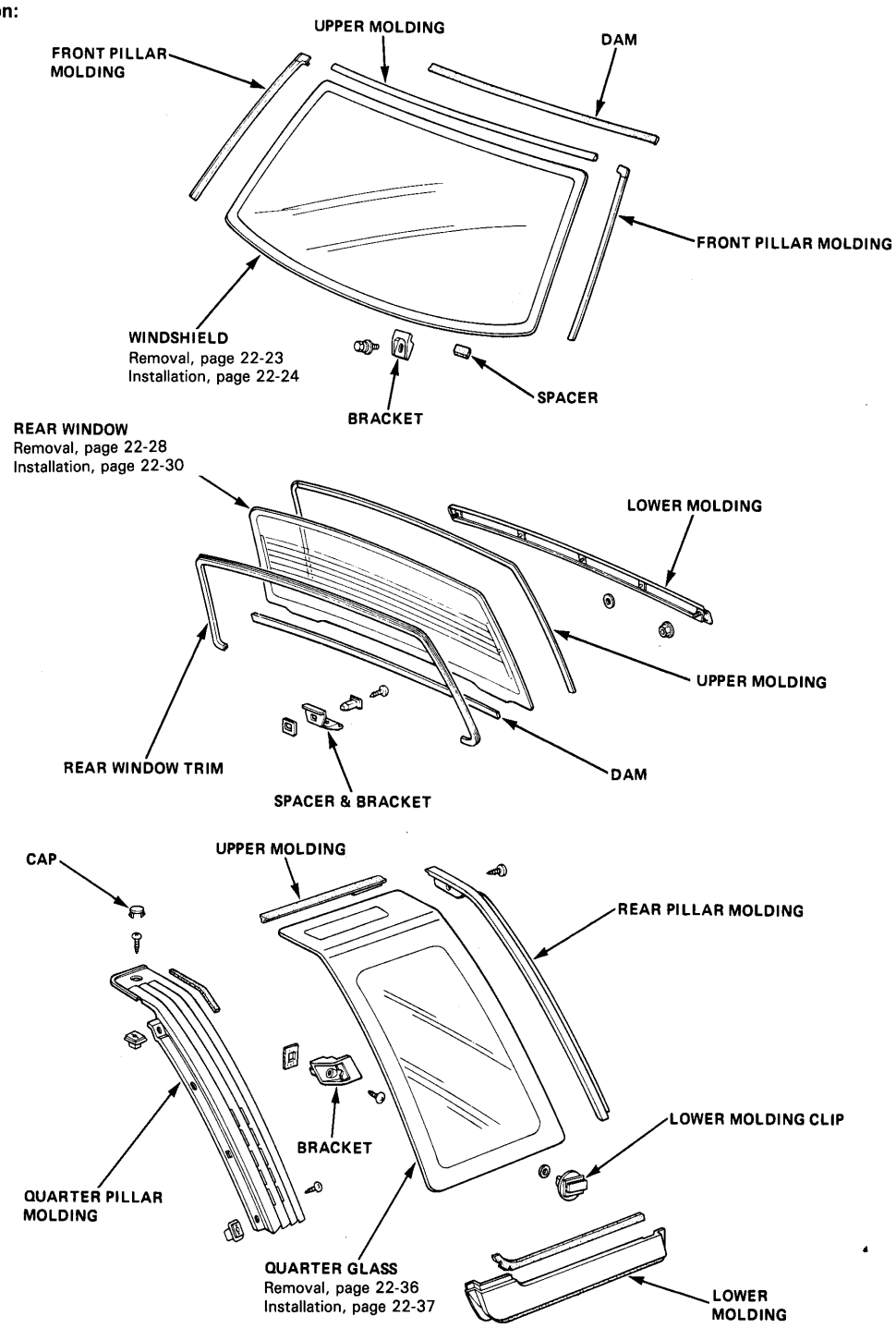
UPPER MOLDING
DAM
FRONT PILLAR MOLDING
FRONT PILLAR MOLDING
WINDSHIELD
Removal, page 22-23
Installation, page 22-24
SPACER
BRACKET
REAR WINDOW
Removal, page 22-28
Installation, page 22-30
LOWER MOLDING
UPPER MOLDING
REAR WINDOW TRIM
DAM
SPACER & BRACKET
CAP
UPPER MOLDING
REAR PILLAR MOLDING
LOWER MOLDING CLIP
BRACKET
QUARTER PILLAR MOLDING
QUARTER GLASS
Removal, page 22-36
Installation, page 22-37
LOWER MOLDING

Windshield

Broken Glass Removal

Windshield:

Remove as much broken glass as possible with a vacuum cleaner.

Blow out the glass in the heater and behind the dashboard with low pressure compressed air.

WARNING **Wear eye protection while using the air gun.**

1. Set the temperature control lever to COLD.
2. Push the HEAT button on the function panel.
3. Make sure the recirculation button is out (OFF).
4. Blow compressed air through the defroster center vent outlet.
5. Remove the blower duct, and remove any glass from the air mix chamber.
6. Remove any glass from the top of the vent/defrost door.
7. Remove any glass from the top and bottom of the carpet and seats with a vacuum cleaner.

   NOTE: You should remove the seats and shake them to remove any glass.

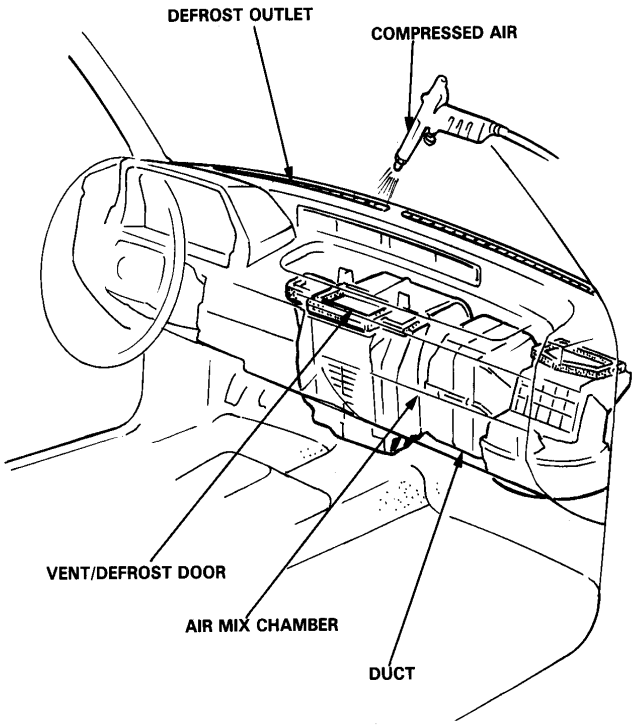

Removal

1. To remove the windshield, first remove the:

   - Inside rear view mirror (page 22-54).
   - Sun visor.
   - Front pillar trim (pages 22-42 to 44).
   - Front wiper and air scoop (section 26).

2. Remove the right and left brackets.

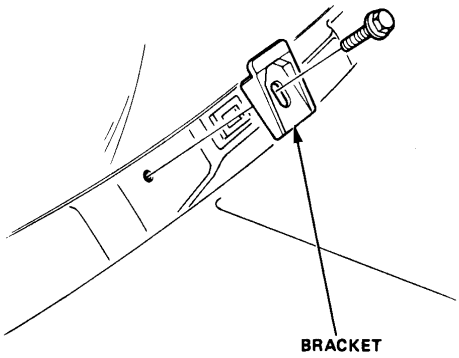

3. Remove the front pillar molding by taking off the drip seal, and removing the screws.

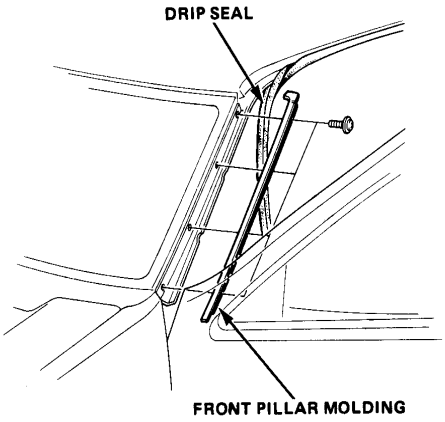

4. Peel off the windshield molding, then pull down the front edge of the headliner so it will not interfere with the glass removal.

   NOTE: Take care not to bend the headliner excessively.

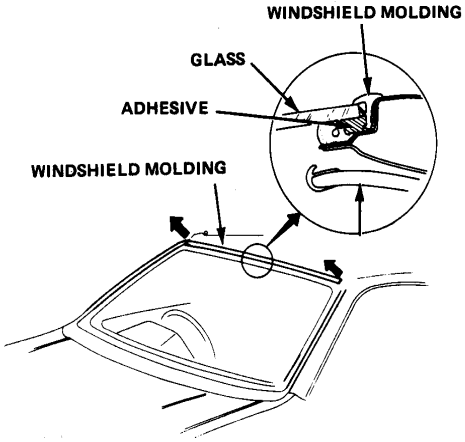

5. Apply protective tape along the edge of the dashboard and body next to the windshield as shown.

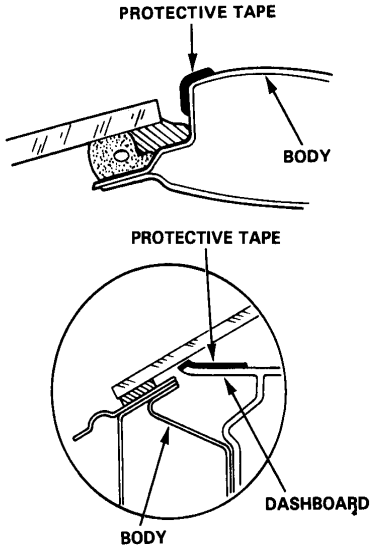

(cont'd)

Windshield

Removal (cont'd)

6. Using an awl, make a hole through the windshield adhesive from inside the car. Push piano wire through the hole and wrap each end around a piece of wood.

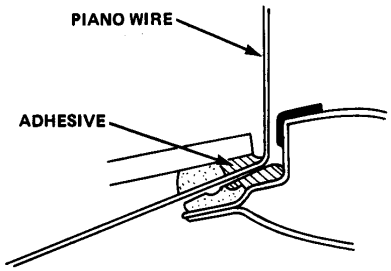

7. With a helper on the outside, pull the wire back and forth in a sawing motion and carefully cut through the adhesive around the entire windshield.

   CAUTION: Hold the piano wire as close to the glass as possible to prevent damage to the body and dashboard.

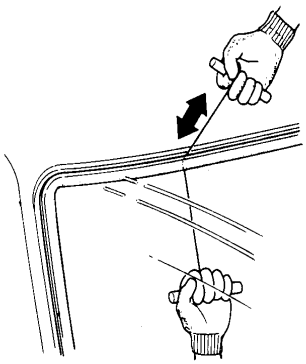

8. Cut the rubber spacers away from the body with a knife; they are cemented in place.

   NOTE: Replace the rubber spacers with new ones whenever the windshield has been removed.

Installation

1. Scrape the old adhesive smooth with a knife, to a thickness of about 2 mm (0.08 in.) on the bonding surface around the entire windshield flange.

   NOTE:
   - Do not scrape down to the painted surface of the body; damaged paint will interfere with proper bonding.
   - Remove all traces of the rubber spacer material from the body.
   - Mask off surrounding surfaces before painting.

2. Clean the body bonding surface with a sponge dampened in alcohol.

   NOTE: After cleaning, keep oil, grease or water from getting on the surface.

3. Peel the lining off each spacer, then install the spacers by pressing them firmly into place at the locations shown.

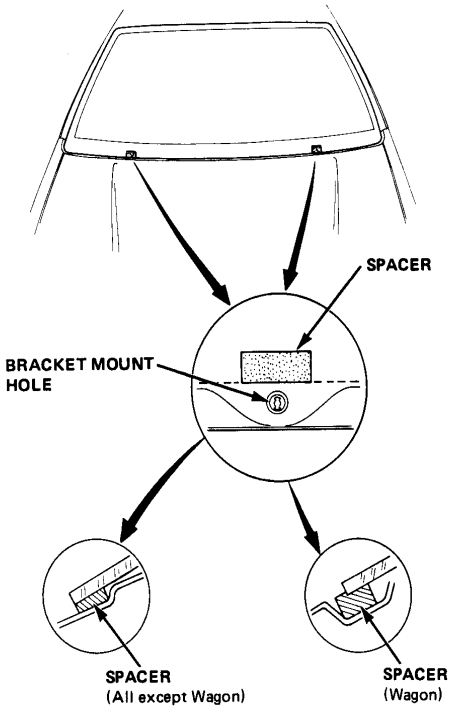

4. Set a new windshield upright on the spacers, and center it in the opening. Mark the location by marking lines across the glass and body with a grease pencil at the four points shown.

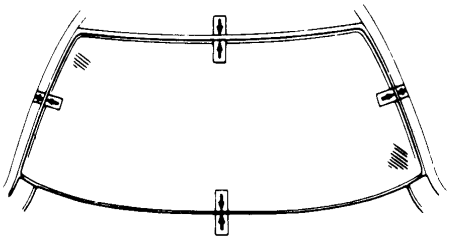

ALIGNMENT MARKS

5. If the glass is to be reinstalled, use a putty knife to scrape off all traces of old adhesive, then clean the glass surface with alcohol where new adhesive is to be applied.

   NOTE: Make sure the bonding surface is kept free of water, oil and grease.

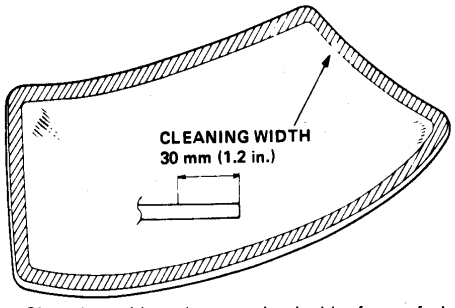

6. Glue the rubber dam to the inside face of the windshield as shown, to contain the adhesive during installation.

   NOTE: Be careful not to touch the glass where adhesive will be applied.

Hatchback, Sedan and Wagon:

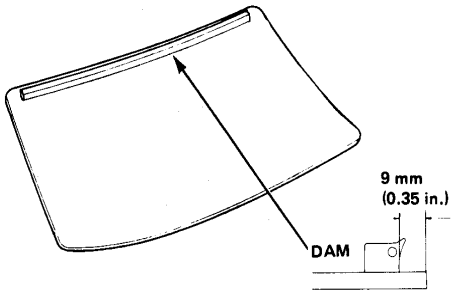

7. With a sponge, apply a light coat of glass primer around the edge of the glass as shown, then lightly wipe it off with gauze or cheesecloth.

   NOTE:
   - Do not apply body primer to the glass, and do not get body and glass primer sponges mixed up.
   - Never touch the primed surfaces with your hands. If you do, the adhesive may not bond to the glass properly, cauing a leak after the windshield is installed.
   - Keep water, dust, and abrasive materials away from the primed surface.

Hatchback, Sedan and Wagon:

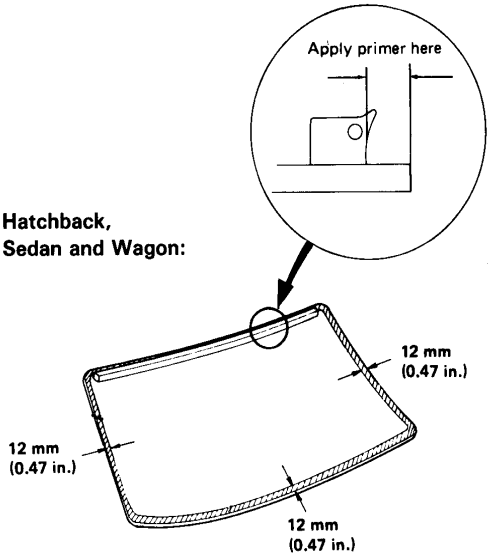

8. With a sponge, apply a light coat of body primer to the original adhesive remaining around the window opening flange. The glass should be installed 10 minutes after you apply the primer.

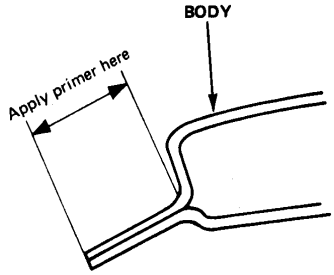

(cont'd)

Windshield

Installation (cont'd)

NOTE:
- Do not apply glass primer to the body, and be careful not to mix up glass and body primer sponges.
- Never touch the primed surfaces with your hands.
- Mask off the dashboard before painting the flange.

9. Thoroughly mix all the adhesive and hardener together on a glass or metal plate with a putty knife.

NOTE:
- Clean the plate with a sponge and alcohol before mixing.
- Follow the instructions that come with the adhesive.

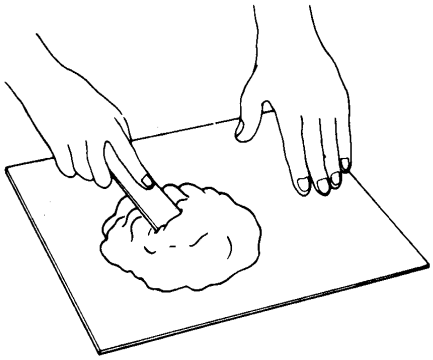

10. Before filling a cartridge, cut off the end of the nozzle at the angle shown.

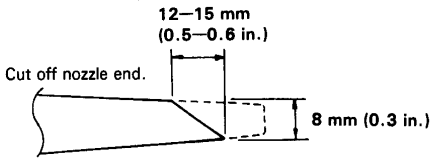

11. Pack adhesive into the cartridge without air pockets, to ensure continuous delivery. Put the cartridge in a caulking gun, and run a bead of adhesive around the edge of the glass as shown.

NOTE: Apply the adhesive within 30 minutes after applying the glass primer.

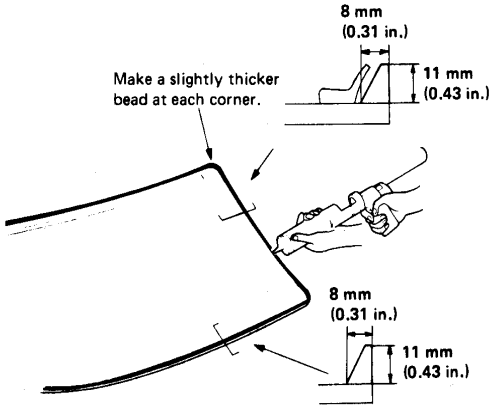

12. Use suction cups to hold the glass over the opening, align it with the marks made in step 4 and set it down on the adhesive. Lightly push on the glass until its edge is fully seated on the adhesive all the way around.

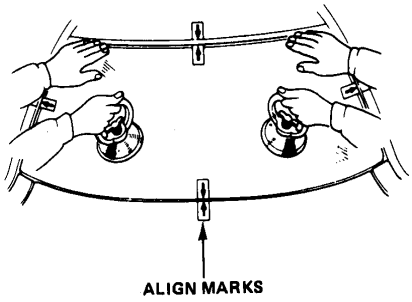

13. Scrape or wipe the excess adhesive off with a putty knife or gauze.

NOTE: Wipe with a soft rag or towel dampened with unleaded gasoline to remove adhesive from a painted surface or glass.

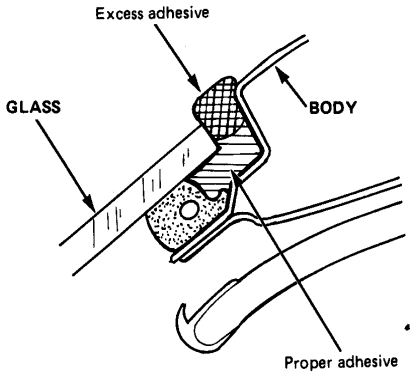

14. Install the windshield molding evenly on both sides. Be sure that adhesive fully contacts the attaching surface by checking the molding at points 100 mm (3.9 in.) apart all the way around.

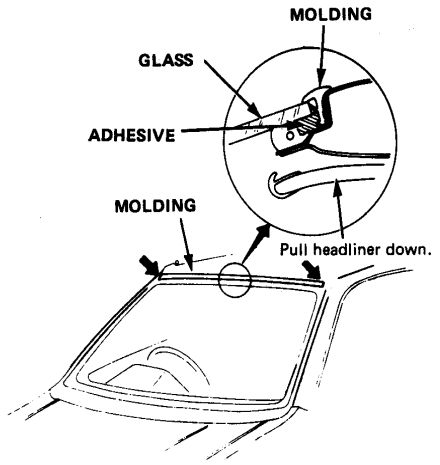

NOTE: Wipe excess adhesive off with a soft rag or towel dampened with unleaded gasoline.

15. Let the molding air dry for about 5 minutes. Check that there are no gaps between the molding and the windshield or frame body all the way around. Seal any gaps in accordance with the instructions.

16. Spray water on the windshield 1-2 hours after installing the glass. Mark any leaks and let the windshield dry, then seal the leaking area with urethan windshield adhesive.

NOTE:
- Do not squirt water on freshly applied adhesive.
- Drive the car slowly if it must be driven during the first 4 hours after the windshield has been installed.

17. Reassemble all removed parts.

NOTE:
- Check that the end of the molding is set under the air scoop on both sides.
- Install the interior mirror rubber damper after the adhesive has dryed thoroughly.

CAUTION: Do not drive the car on rough or uneven surfaces for at least 4 hours.

Sealing the Molding

Follow the procedures described below if there are gaps between the molding and windshield or frame body 5 minutes after the molding has been installed.

1. To seal a molding gap in a straight area:

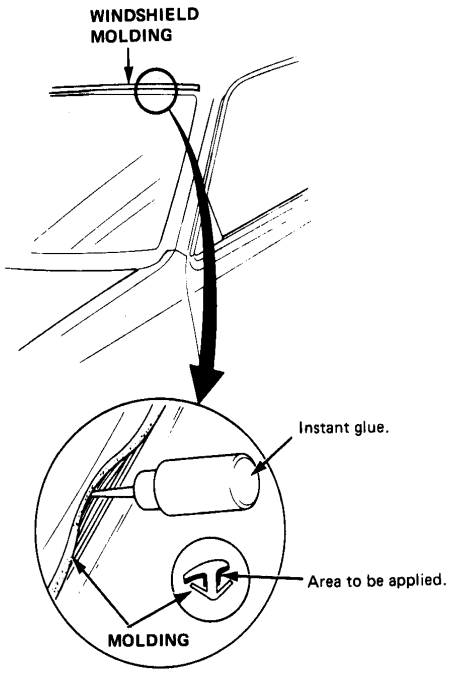

- Raise the molding at the area where gap exists; apply small amount of an instant glue to the area and hold the molding against the glass and/or frame body for at least 20 seconds.

CAUTION: Avoid "instant glue" contact with your skin. See a doctor immediately if it gets in your eyes. Avoid getting the glue on the car glass or body.

Rear Window

Removal

CAUTION:
- **Wear gloves to remove and install the glass.**
- **Do not damage the defroster printed circuit.**

1. To remove the rear window glass, first remove the:

Sedan:
- Rear shelf (page 22-45).
- Rear roof trim (page 22-59).

Hatchback:
- Tailgate trim panel (page 22-46).
- Spoiler (page 22-72).
- Rear wiper (section 26).

Wagon:
- Tailgate trim panel (page 22-47).
- Spoiler (page 22-72).
- Rear wiper (section 26)

2. Remove the rear window trim (except sedan).

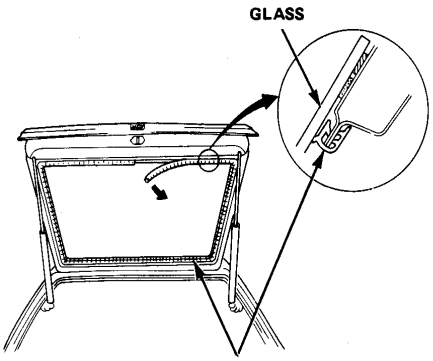

3. Disconnect the defroster leads, and remove their holders.
4. Remove the upper and lower moldings.

Sedan:
- Remove the rear pillar molding and the lower molding, by removing the screws.

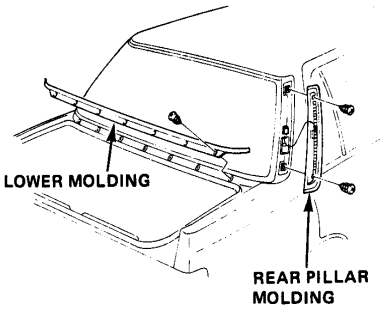

- Peel off the upper molding.

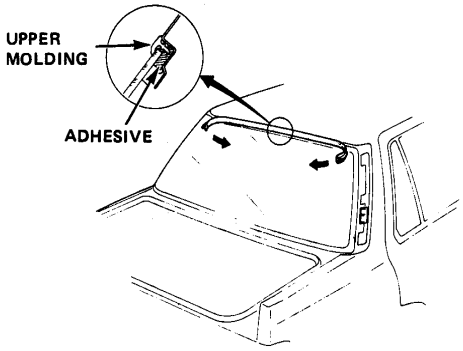

Hatchback and Wagon:
- Remove the lower molding by removing the bolts (Hatchback) or plastic nuts (Wagon), and prying up the retainer clips (Wagon).

Hatchback:

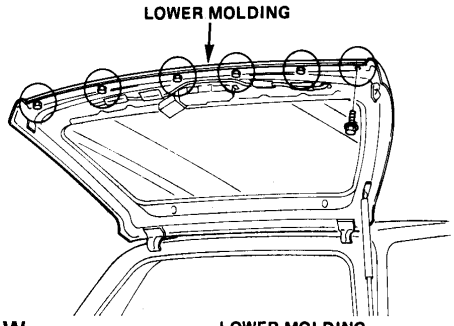

Wagon:

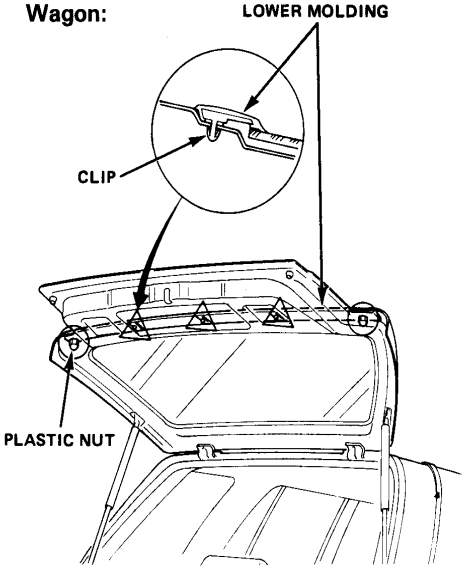

- Peel off the upper molding.

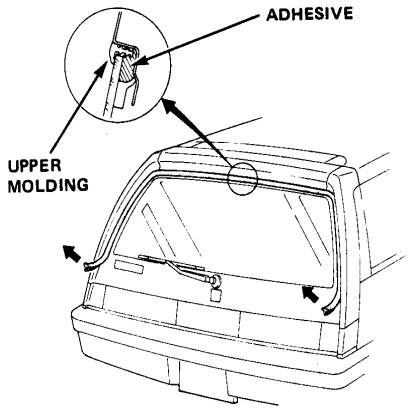

5. Remove the screws and all the brackets.

Wagon:

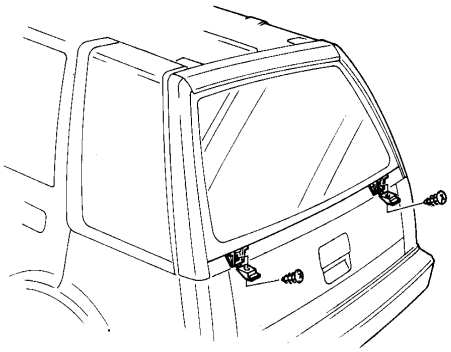

6. Apply protective tape along the edge of the body next to the glass as shown.

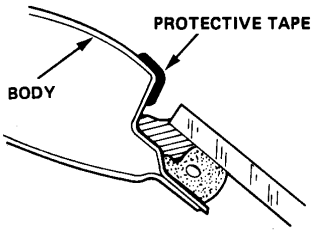

7. Using an awl, make a hole through the glass adhesive from inside the car. Push piano wire through the hole and wrap each end around a piece of wood.

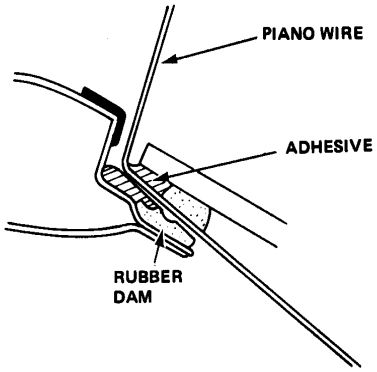

8. With a helper on the outside, pull the wire back and forth in a sawing motion and carefully cut through the adhesive around the entire glass.

   CAUTION: Hold the piano wire as close to the glass as possible to prevent damage to the body.

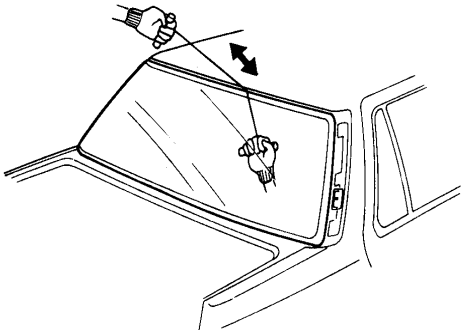

9. Cut the rubber spacers away from body with a knife; they are cemented in place.

   NOTE: Replace the rubber spacers with new ones whenever the glass has been removed.

Rear Window

Installation

1. Scrape the old adhesive smooth with a knife, to a thickness of about 2 mm (0.08 in) on the bonding surface around the entire window flange.

   NOTE:
   - Do not scrape down to the painted surface of the body; damaged paint will interfere with proper bonding.
   - Remove all traces of the rubber spacer material from the body.
   - Mask off surrounding surfaces before painting.

2. Clean the body bonding surface with a sponge dampened in alcohol.

   NOTE: After cleaning, keep oil, grease or water from getting on the surface.

3. Install the spacers as shown.

Sedan:
- Peel the lining off the spacer, install the spacers by pressing them firmly.

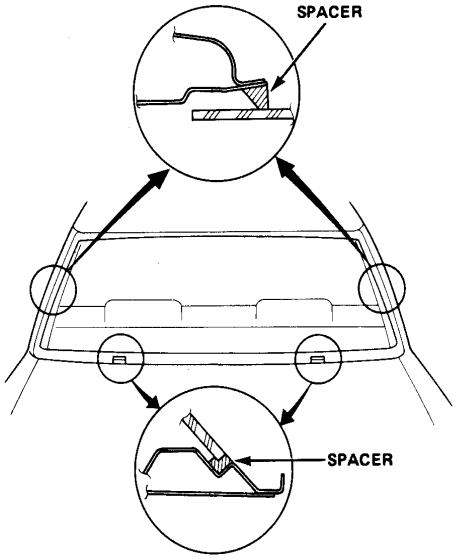

Hatchback:

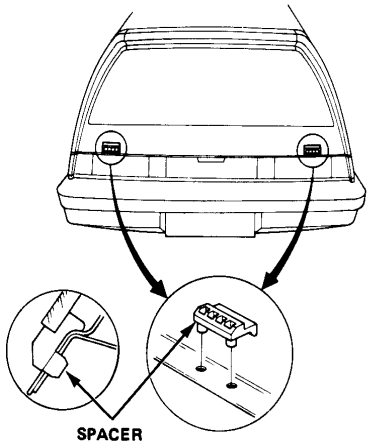

Wagon:

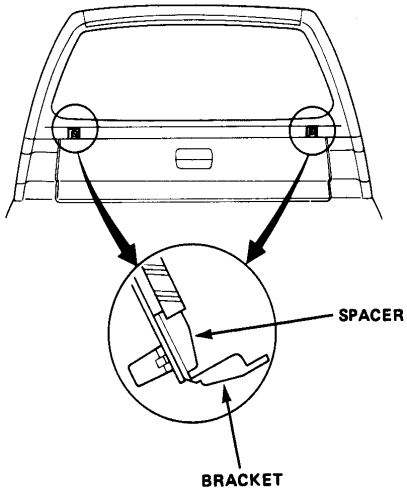

4. Set a new window upright on the spacers, and center it in the opening. Mark the location by marking lines across the glass and body with a grease pencil at the four points shown.

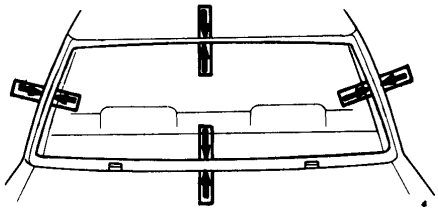

5. If the glass is to be reinstalled, use a putty knife to scrape off all traces of old adhesive, then clean the glass surface with alcohol where new adhesive is to be applied.

   NOTE: Make sure the bonding surface is kept free of water, oil and grease.

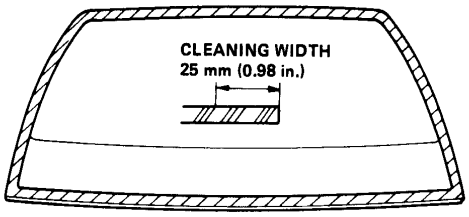

6. Glue the rubber dam to the inside face of the windshield as shown, to contain the adhesive during installation.

   NOTE: Be careful not to touch the glass where adhesive will be applied.

Sedan:

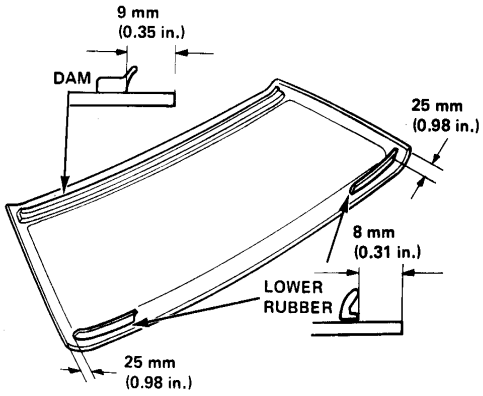

Hatchback:

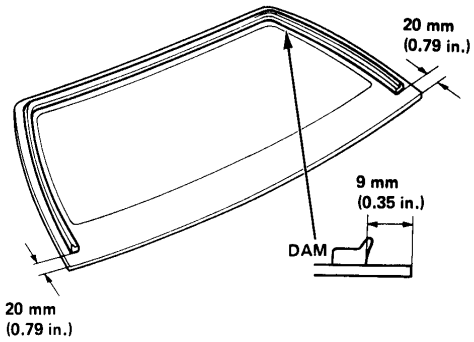

Wagon:

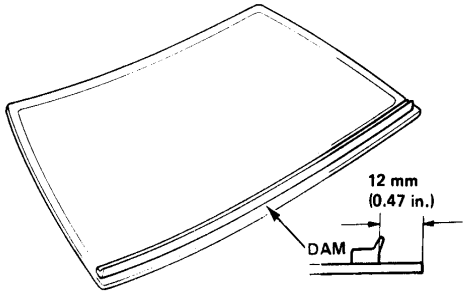

7. With a sponge, apply a light coat of glass primer around the edge of the glass as shown, then lightly wipe with gauze or cheesecloth.

   NOTE:
   - Do not apply body primer to the glass, and do not get body and glass primer sponges mixed up.
   - Never touch the primed surfaces with your hands. If you do, the adhesive may not bond to the glass properly, causing a leak after the glass is installed.
   - Keep water, dust, and abrasive materials away from the primed surface.

Sedan:

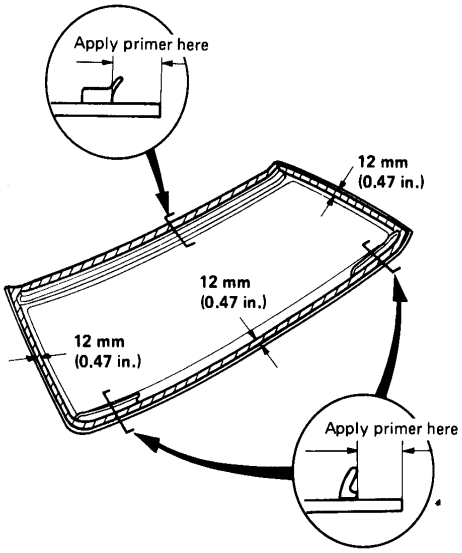

(cont'd)

Rear Window

Installation (cont'd)

Hatchback:

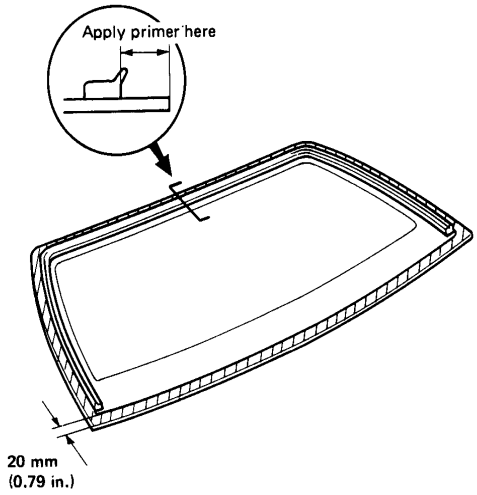

Wagon:

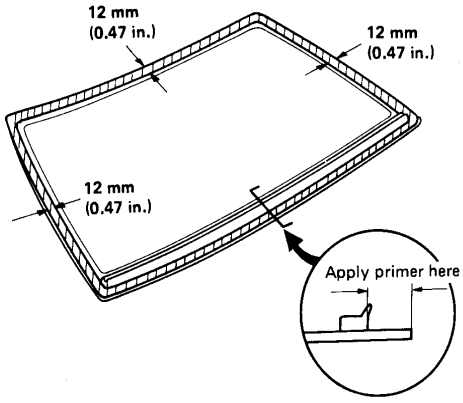

8. Install the rear window trim in the frame (except sedan).

NOTE:
- Install the rear window trim with the wide end on the interior side.
- When attaching the rear window trim, make sure the thickness is even all the way around.

Hatchback:

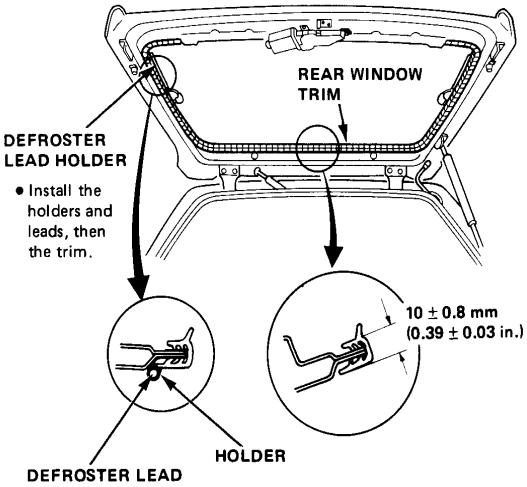

Wagon:

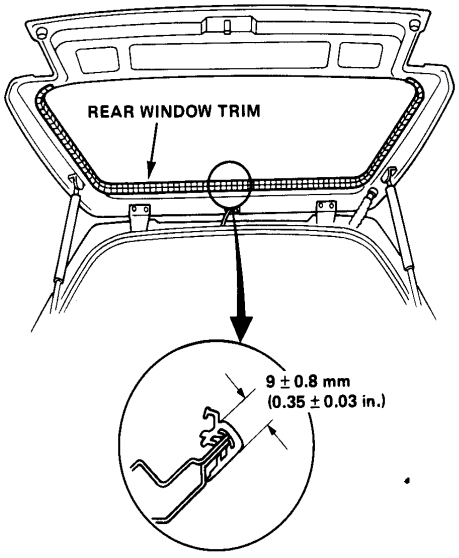

9. With a sponge, apply a light coat of body primer to the original adhesive remaining around the window opening flange. The glass should be installed 10 minutes after you apply the primer.

   NOTE:
   - Do not apply glass primer to the body, and be careful not to mix up glass and body primer sponges.
   - Never touch the primed surfaces with your hands.

Sedan:

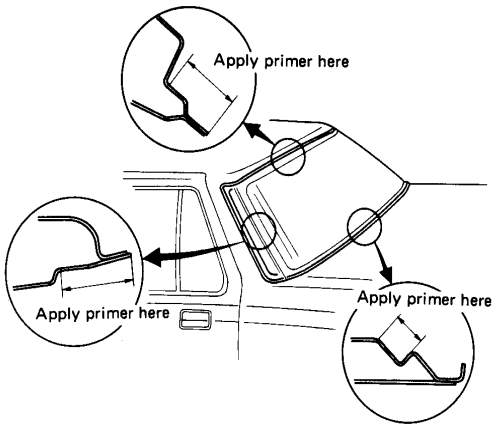

Hatchback:

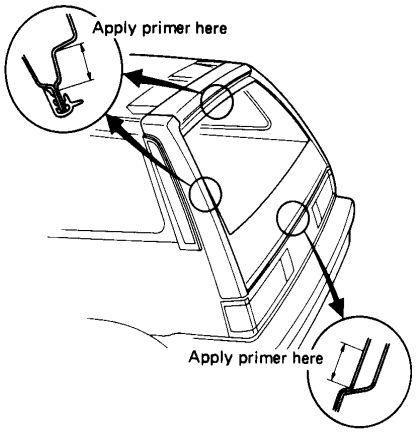

Wagon:

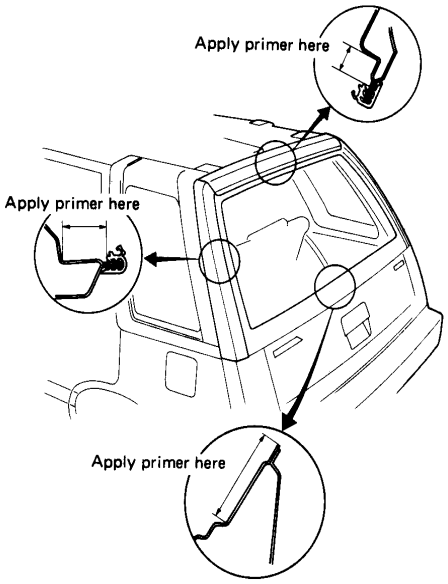

10. Thoroughly mix all the adhesive and hardener together on a glass or metal plate with a putty knife.

    NOTE:
    - Clean the plate with a sponge and alcohol before mixing.
    - Follow the instructions that come with the adhesive.

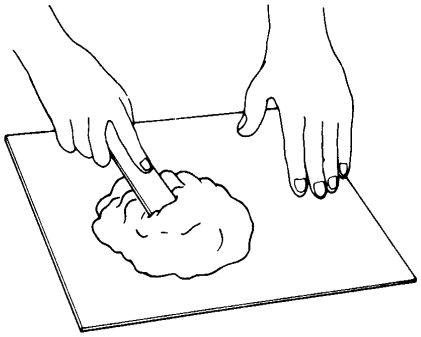

11. Before filling a cartridge, cut off the end of the nozzle at the angle shown.

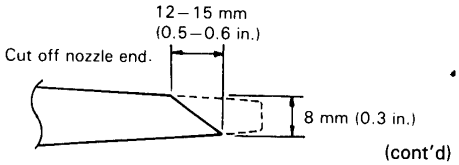

(cont'd)

Rear Window

Installation (cont'd)

12. Pack adhesive into the cartridge without air pockets, to ensure continuous delivery. Put the cartridge in a caulking gun, and run a bead of adhesive around the edge of the glass as shown.

    NOTE: Apply the adhesive within 30 minutes after applying the glass primer.

Sedan:

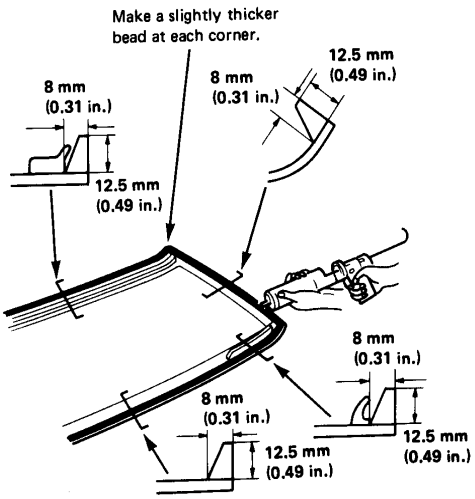

Hatchback:

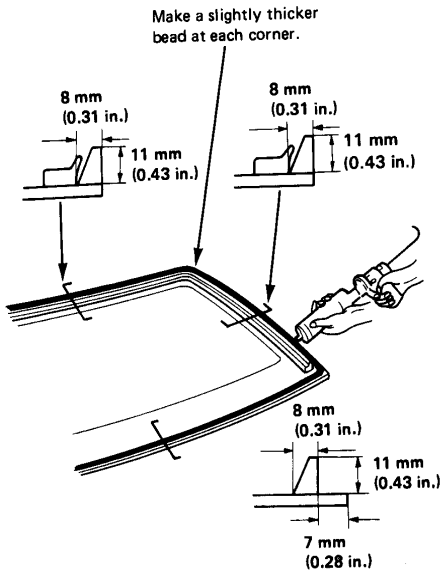

Wagon:

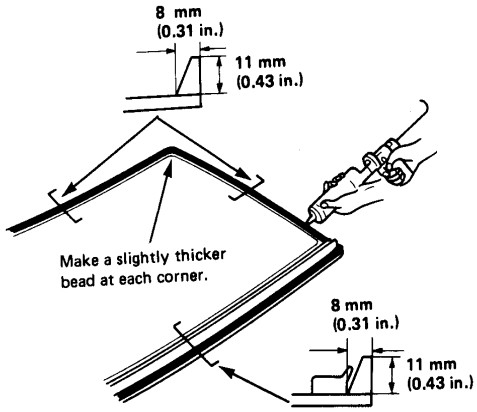

13. Use suction cups to hold the glass over the opening, align it with the marks made in step 4 and set it down on the adhesive. Lightly push on the glass until its edge is fully seated on the adhesive all the way around.

ALIGN MARKS

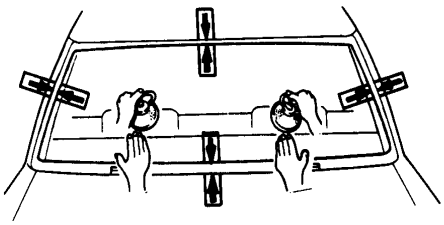

14. Scrape or wipe the excess adhesive off with a putty knife or gauze.

    NOTE: Wipe with a soft rag or towel dampened with unleaded gasoline to remove adhesive from a painted surface or glass.

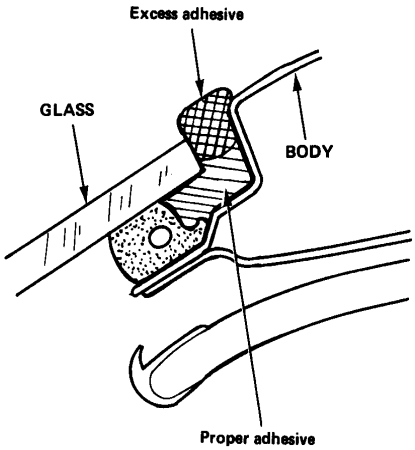

15. Install the upper molding evenly on both sides. Be sure that adhesive fully contacts the attaching surface by checking the molding at points 100 mm (3.9 in.) apart all the way around.

Sedan:

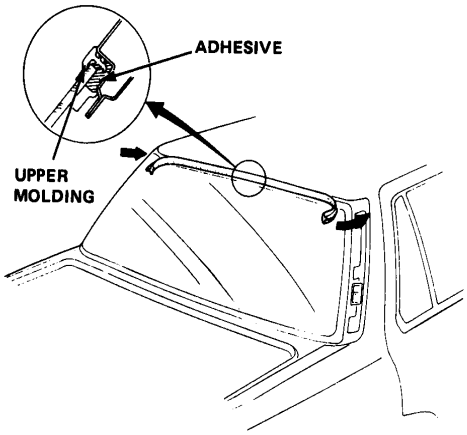

Hatchback and Wagon:

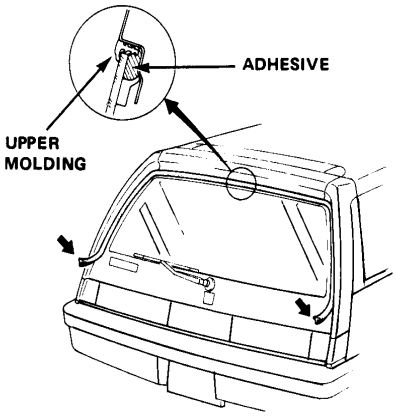

NOTE: Wipe excess adhesive off with a soft rag or towel dampened with unleaded gasoline.

16. Let the molding air dry for about 5 minutes. Check that there are no gaps between the molding and the glass or frame body all the way around. Seal any gaps in accordance with the instructions described in page 22-27.

17. Spray water on the windshield 1—2 hours after installing the glass. Mark any leaks and let the windshield dry, then seal leaking area with urethan windshield adhesive.

    NOTE:
    - Do not squirt water on freshly applied adhesive.
    - Drive the car slowly if it must be driven during the first 4 hours after the glass has been installed.

18. Install the moldings in the reverse order of removal (page 22-28).

19. Install the defroster leads and their holders (except Hatchback).

20. Reassemble all removed parts.

    CAUTION: Do not drive the car on rough or uneven surfaces for at least 4 hours.

Quarter Glass (Wagon)

Removal

1. To remove the quarter glass, first remove interior the quarter window trim (pages 22-42 to 44).

2. Remove the quarter pillar molding as follows.
   - Remove the screws and quarter pillar molding, then the brackets.

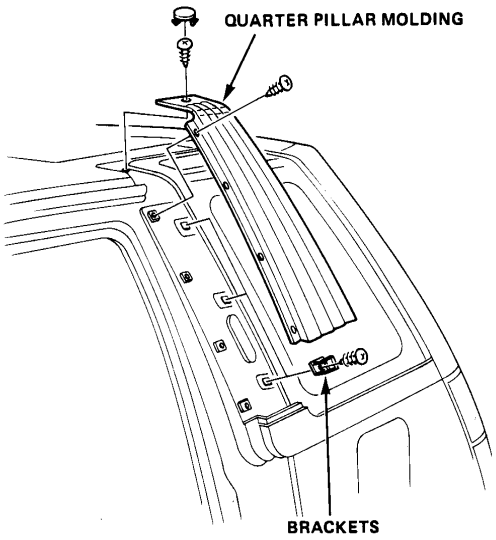

3. Remove the molding as follows.
   - Peel the upper molding off the glass.

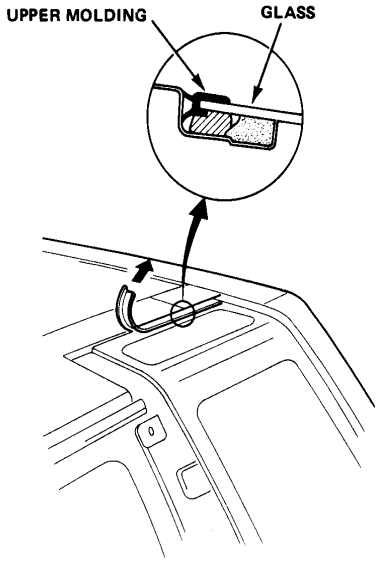

- To remove the lower molding, first carefully slide the front of it downward. Then slide it forward to free it from the other clips.

CAUTION: Be careful not to damage the body and glass by sliding the molding pieces.

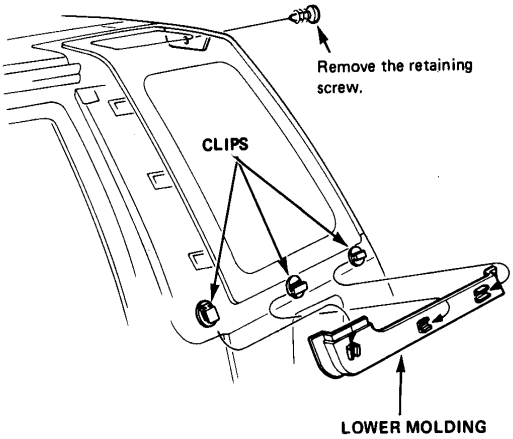

- For replacement, the lower clips can be removed by turning them 90°.

4. Apply protective tape along the edge of the body next to the glass as shown.

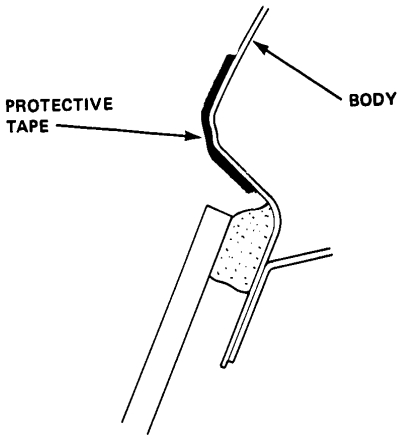

5. Using an awl, make a hole through the glass adhesive from inside the car. Push piano wire through the hole and wrap each end around a piece of wood.

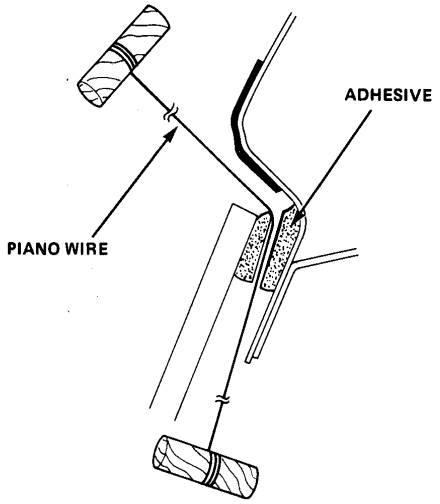

6. With a helper on the outside, pull the wire back and forth in a sawing motion and carefully cut through the adhesive around the entire glass.

CAUTION: Hold the piano wire as close to the glass as possible to prevent damage to the body.

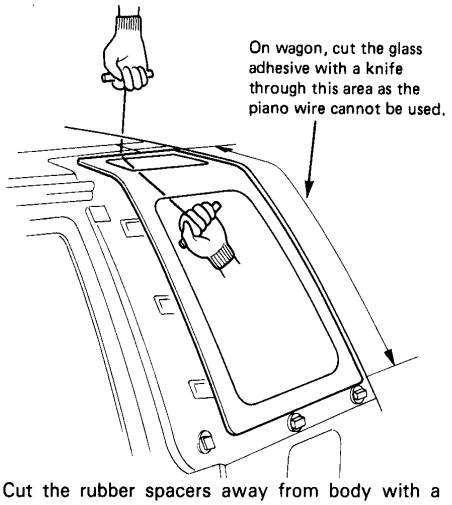

7. Cut the rubber spacers away from body with a knife; they are cemented in place.

NOTE: Replace the rubber spacers with new ones whenever the glass has been removed.

Installation

1. Scrape the old adhesive smooth with a knife, to a thickness of about 2 mm (0.08 in.) on the bonding surface around the entire window glass flange.

   NOTE:
   - Do not scrape down to the painted surface of the body; damaged paint will interfere with proper bonding.
   - Remove all traces of the rubber spacer material from the body.
   - Mask off surrounding surfaces before painting.

2. Clean the body bonding surface with a sponge dampened in alcohol.

   NOTE: After cleaning, keep oil, grease or water from getting on the surface.

3. Set a new glass on the spacers, and center it in the opening. Mark the location by marking lines across the glass and body with a grease pencil at the four points shown.

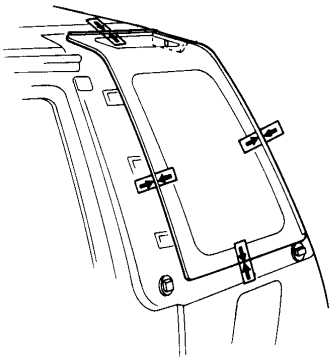

(cont'd)

Quarter Glass (Wagon)

Installation (cont'd)

4. If the glass is to be reinstalled, use a putty knife to scrape off all traces of old adhesive, then clean the glass surface with alcohol where new adhesive is to be applied.

   NOTE: Make sure the bonding surface is kept free of water, oil and grease.

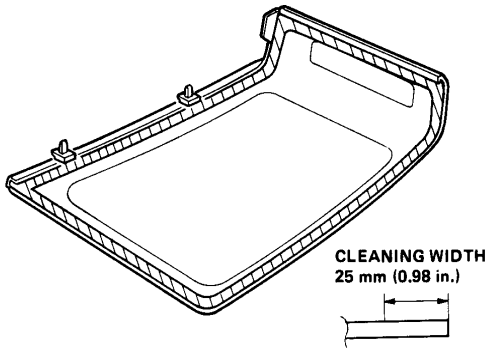

5. Glue the rubber dam to the inside face of the glass as shown, to contain the adhesive during installation.

   NOTE: Be careful not to touch the glass where adhesive will be applied.

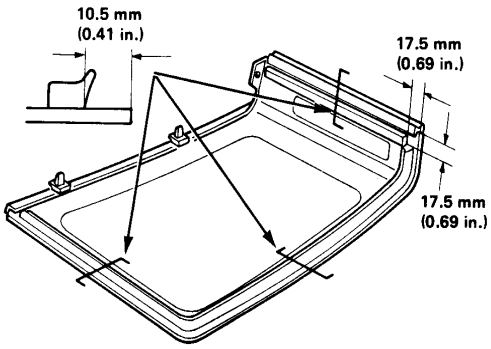

6. With a sponge, apply a light coat of glass primer around the edge of glass as shown, then lightly wipe it off with gauze or cheesecloth.

NOTE:
- Do not apply body primer to the glass, and do not get body and glass primer sponges mixed up.
- Never touch the primed surfaces with your hands. If you do, the adhesive may not bond to the glass properly, causing a leak after the glass is installed.
- Keep water, dust, and abrasive materials away from the primed surface.

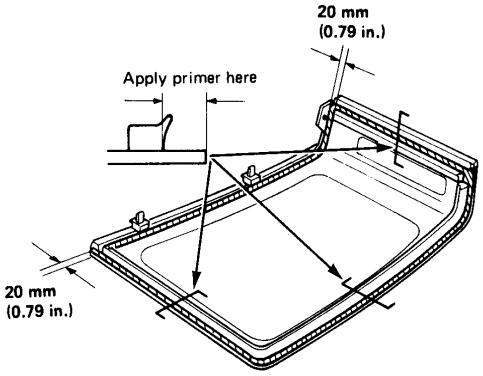

7. With a sponge, apply a light coat of body primer to the original adhesive remaining around the window opening flange. The glass should be installed 10 minutes after you apply the primer.

   NOTE:
   - Do not apply glass primer to the body, and be careful not to mix up glass and body primer sponges.
   - Never touch the primed surfaces with your hands.

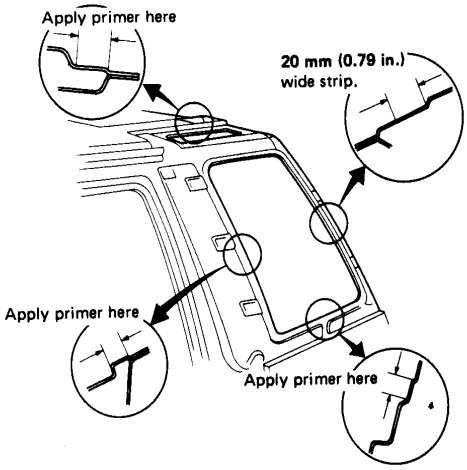

8. Thoroughly mix all the adhesive and hardener together on a glass or metal plate with a putty knife.

   NOTE:
   - Clean the plate with a sponge and alcohol before mixing.
   - Follow the instructions that come with the adhesive.

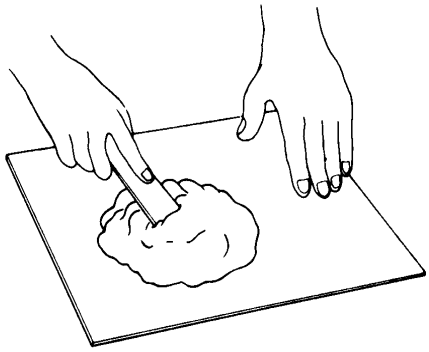

9. Before filling a cartridge, cut off the end of the nozzle at the angle shown.

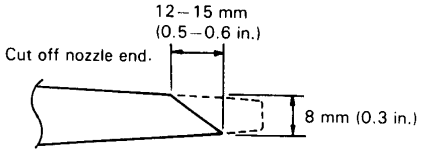

10. Pack adhesive into the cartridge without air pockets, to ensure continuous delivery. Put the cartridge in a caulking gun, and run a bead of adhesive around the edge of the glass as shown.

    NOTE: Apply the adhesive within 30 minutes after applying the glass primer.

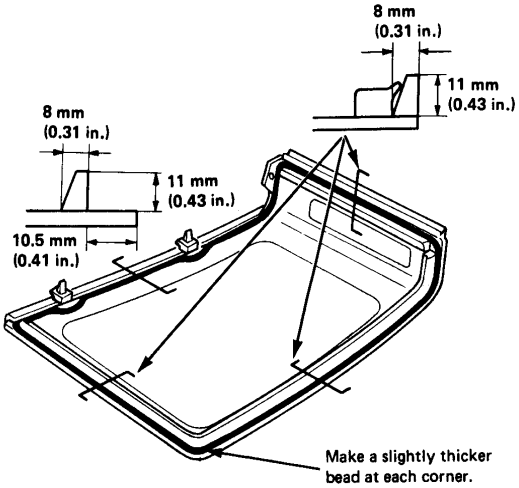

11. Use suction cups to hold the glass over the opening, align it with the marks made in step 4 and set it down on the adhesive. Lightly push on the glass until its edge is fully seated on the adhesive all the way around.

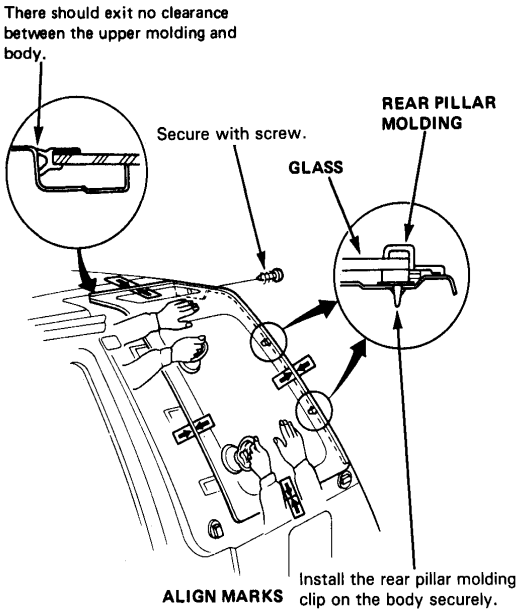

12. Scrape or wipe the excess adhesive off with a putty knife or gauze.

    NOTE: Wipe with a soft rag or towel dampened with unleaded gasoline to remove adhesive from a painted surface or glass.

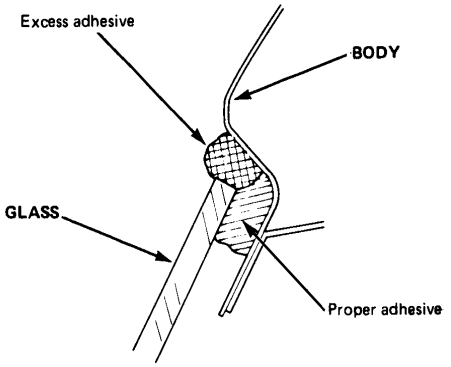

(cont'd)

Quarter Glass (Wagon)

Installation (cont'd)

13. Secure the glass by installing the brackets (page 22-36).

14. Spray water on the quarter glass 1—2 hours after installing the glass. Mark any leaks and let the windshield dry, then seal leaking area with urethan windshield adhesive.

    NOTE:
    - Do not squirt water on freshly applied adhesive.
    - Drive the car slowly if it must be driven during the first 4 hours after the quarter glass has been installed.

15. Attach the 3 clips to the lower molding then push them into the clip holes in the body and attach the pillar molding over them.

    CAUTION: Do not drive the car on rough or uneven surfaces for at least 4 hours.

Quarter Glass (Hatchback)

Replacement

1. Pry the latch mount cover out and then remove the screws.

2. Remove the screws and the quarter pillar molding.

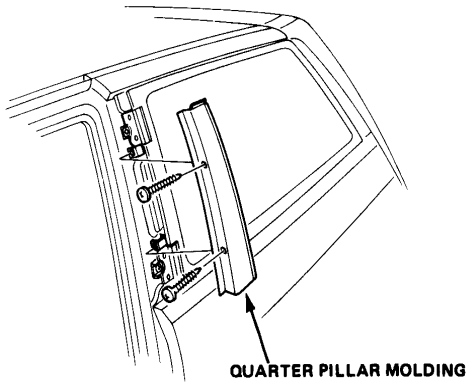

3. Remove the quarter glass hinge mounting screws, and then the glass.

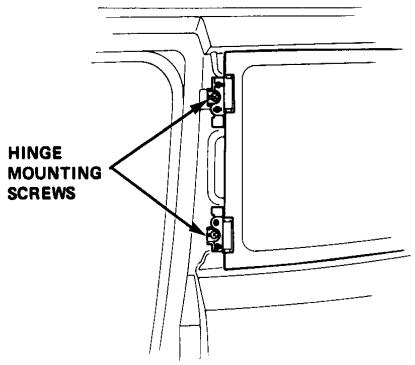

4. Remove the circlip with a screwdriver, then remove the latch.

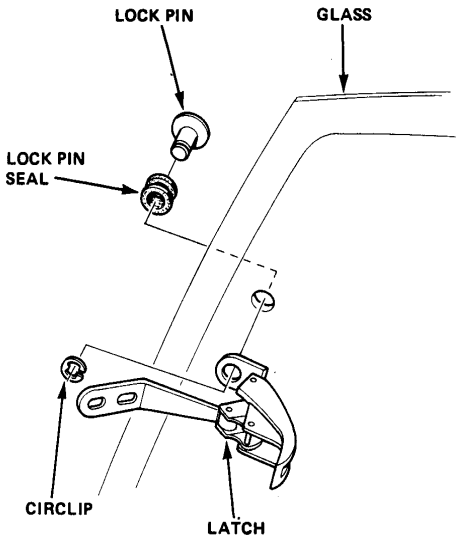

5. If necessary, pull off the weatherstrip and remove the rear pillar molding.

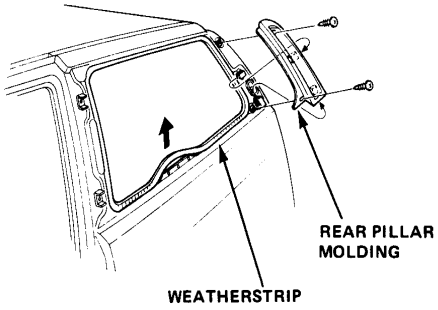

6. Install in the reverse of removal. Check for proper glass fit when closed after installation.
   To adjust, remove the quarter pillar molding, loosen the quarter glass hinge mount screw and move the glass back and forth. Adjust so that the latch works smoothly, and the glass closes securely.
   Check for proper contact between the glass and weatherstrip at the rear edge.

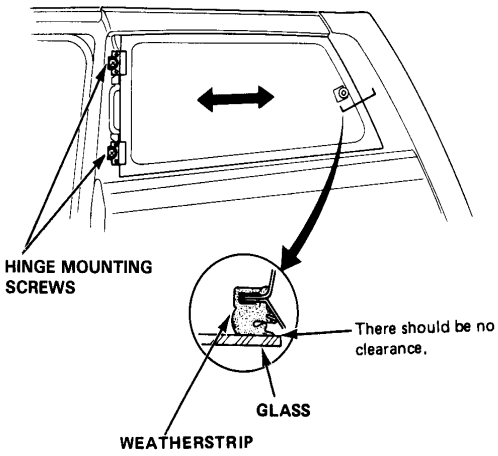

Detachable Sunroof

Disassembly

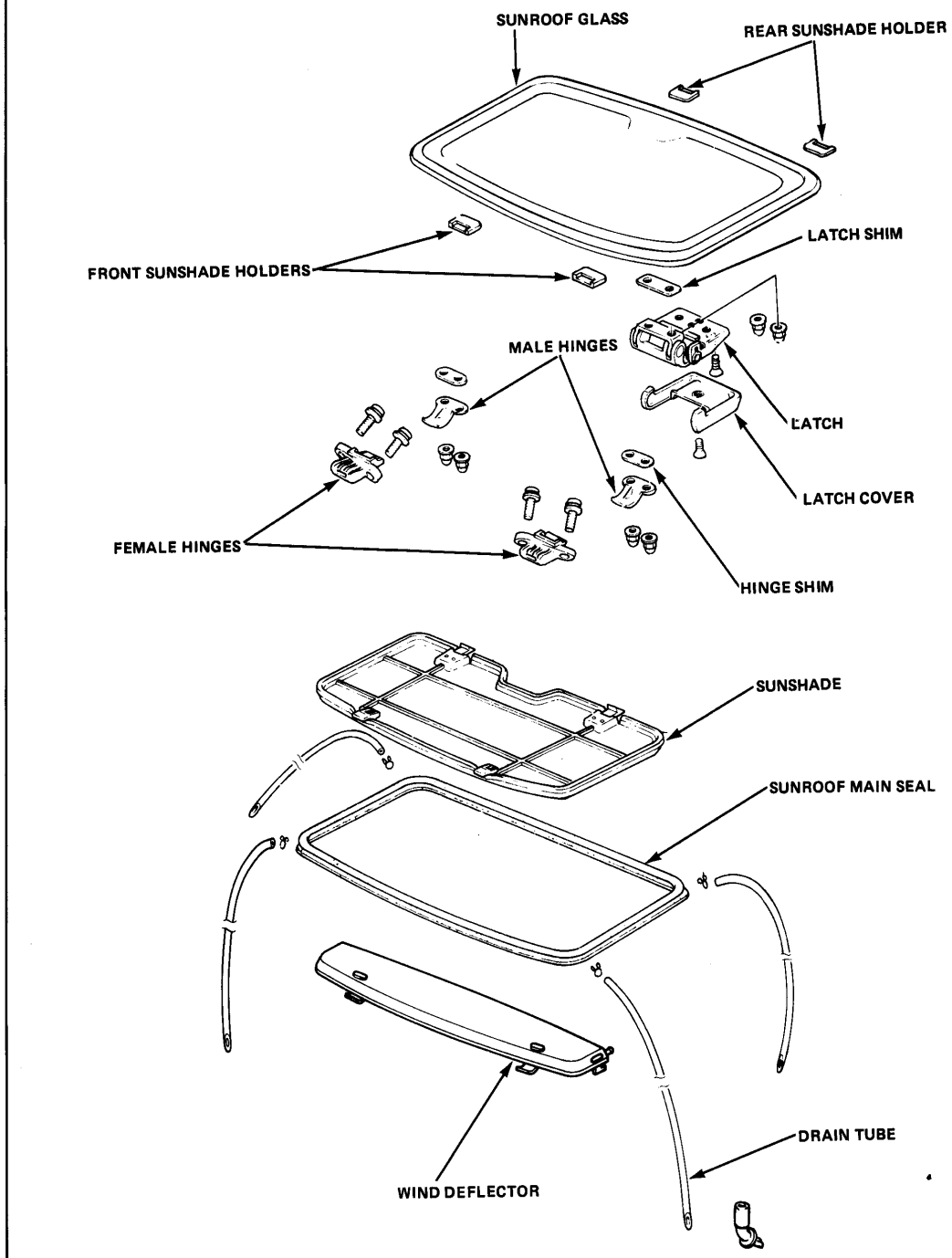

22-42

Height Adjustment

The roof panel should be even with the glass weatherstrip, to within $0\pm^{2}_{1}$mm ($0\pm^{0.08}_{0.04}$ in.) all the way around. If not, remove the sunroof glass, then remove the male hinge mount nuts and add or remove shims between the glass frame and the male hinge as shown. Repeat on opposite side if necessary.

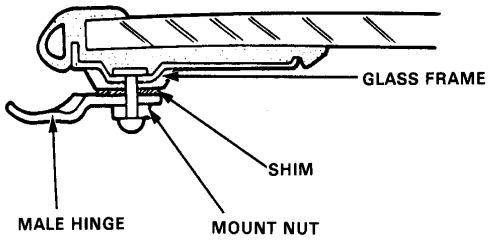

Glass Side Clearance Adjustment

If the glass weatherstrip fits too tight against the roof panel on one side when closed, remove the sunroof glass, then:

1. Loosen all female hinge mount screws.

2. Move the female hinges right or left as necessary, then tighten the screws and install the sunroof glass to re-check roof closing.
   The female hinges can be adjusted 2 mm (0.08 in.) right or left.

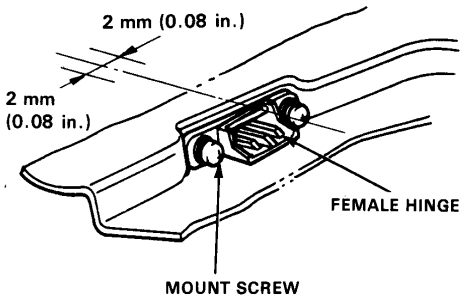

Closing Fit

If the fit of the glass weatherstrip is too tight at the front or rear when closed, remove the sunroof glass, then:

1. Loosen all male hinge mount nuts and the latch lever bracket mount nuts.

2. Equally move the male hinges and the latch bracket front or back as necessary, then tighten the mount nuts and install the sunroof glass to re-check roof closing.

   NOTE: The male hinges and the latch bracket can be adjusted 1.5 mm (0.06 in.) front or back.

Front Edge:

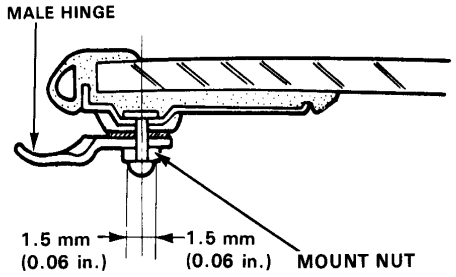

Rear Edge:

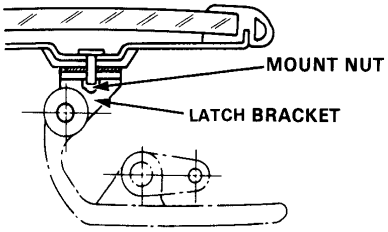

Detachable Sunroof

Latch Base Installation/Adjustment

1. Check that the latch lever is parallel with the latch base when the sunroof is closed. To adjust, remove the latch cover, loosen the base mount screw, and move the latch base back or forth as required.

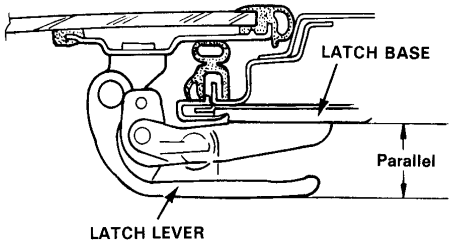

2. If the latch lever arms do not fit the latch base holes, loosen the base mount screws and move the latch base until correct alignment is reached.

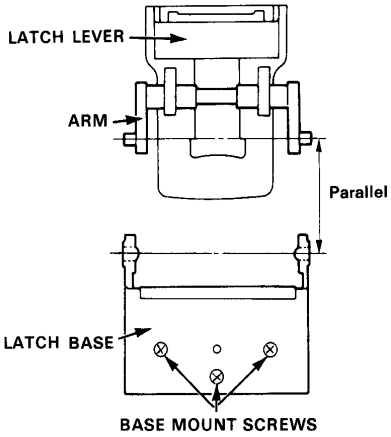

Latch Lever Operation/Adjustment

1. First check to be certain that the sunroof main seal is properly in plase.

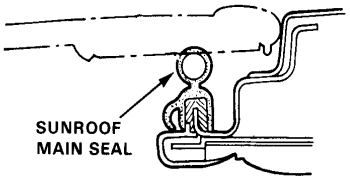

2. Check the operation of the latch lever; if it's too loose or tight, add or remove shims as required.

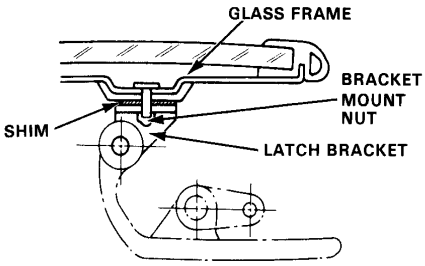

Drain Tube Replacement

To replace the drain tube, it is necessary to remove the headliner. To facilitate removal of the rear drain tubes, remove the quarter trim panel.

NOTE: Install the tube clips with the ends facing the side to ease installation of the headliner.

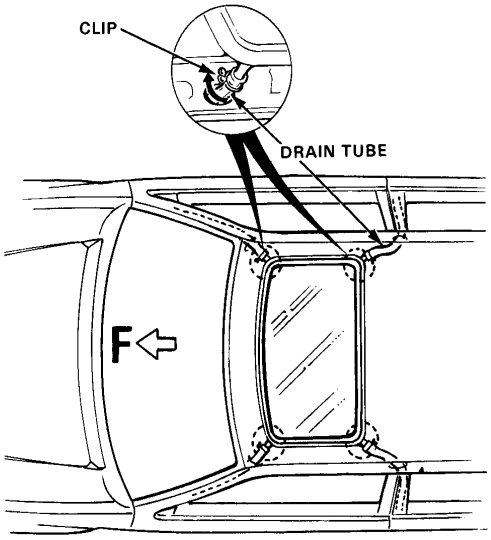

Interior Trim

Replacement

Sedan:

Disassemble in numbered sequence

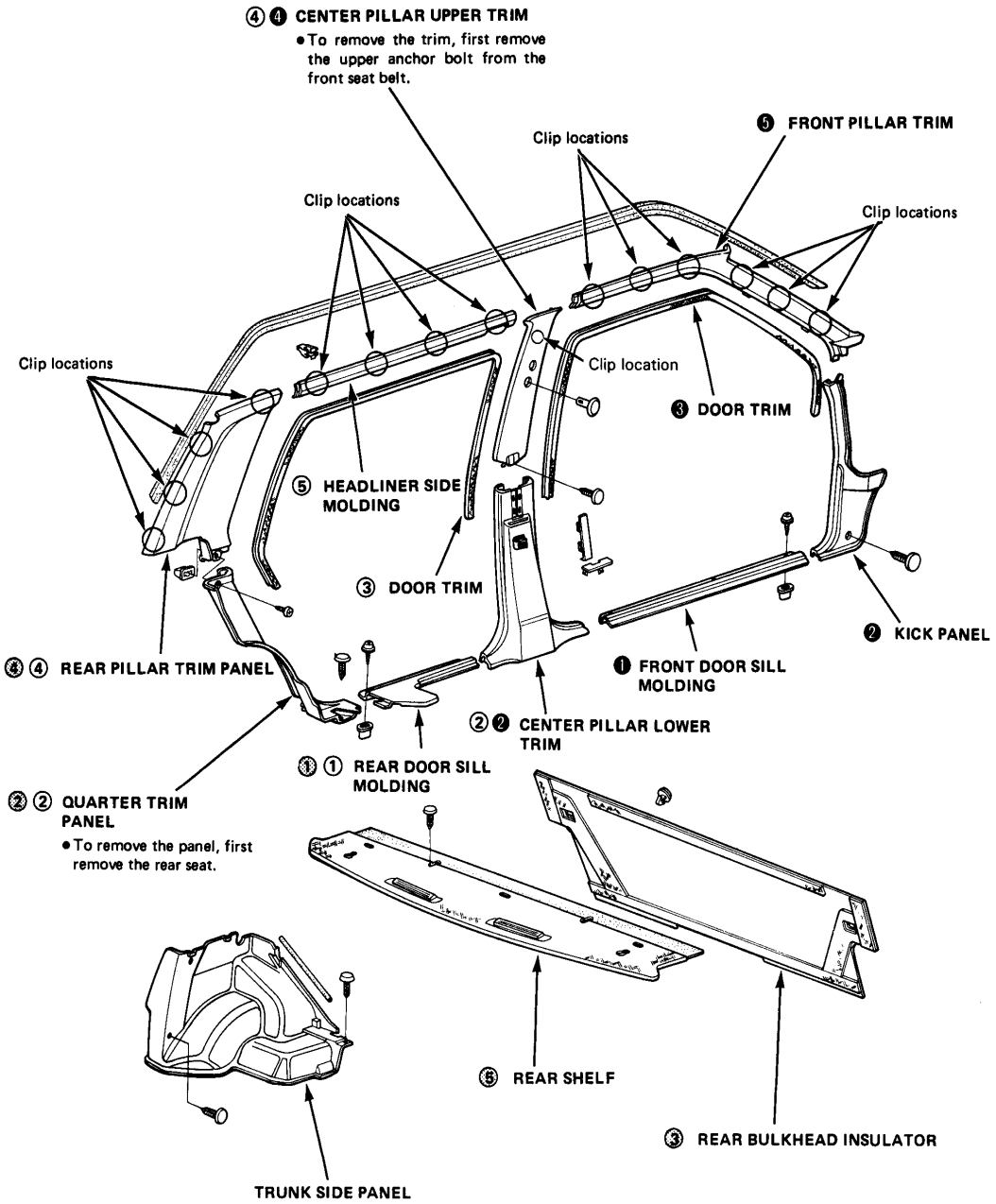

(cont'd)

Interior Trim

Replacement (cont'd)

Hatchback:

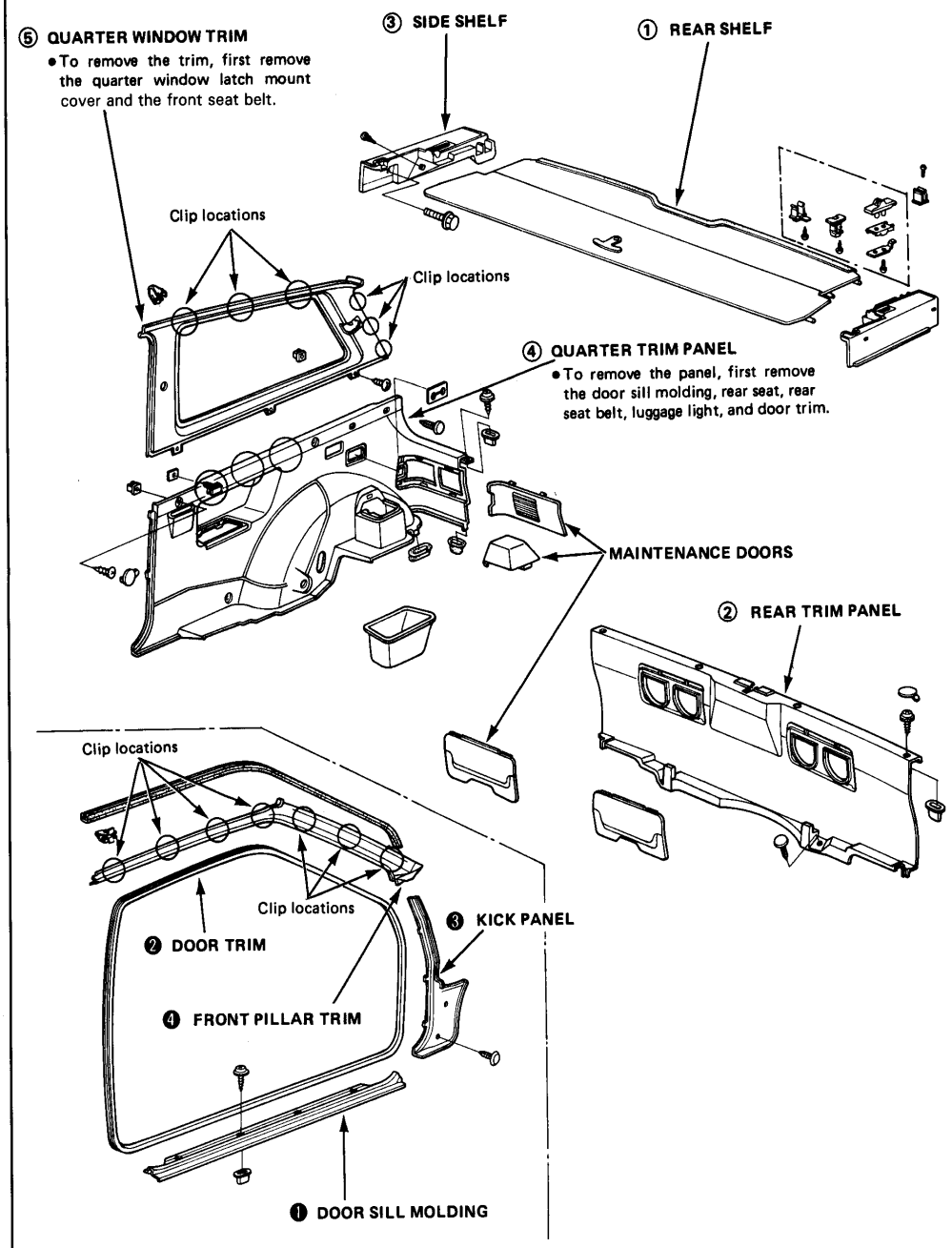

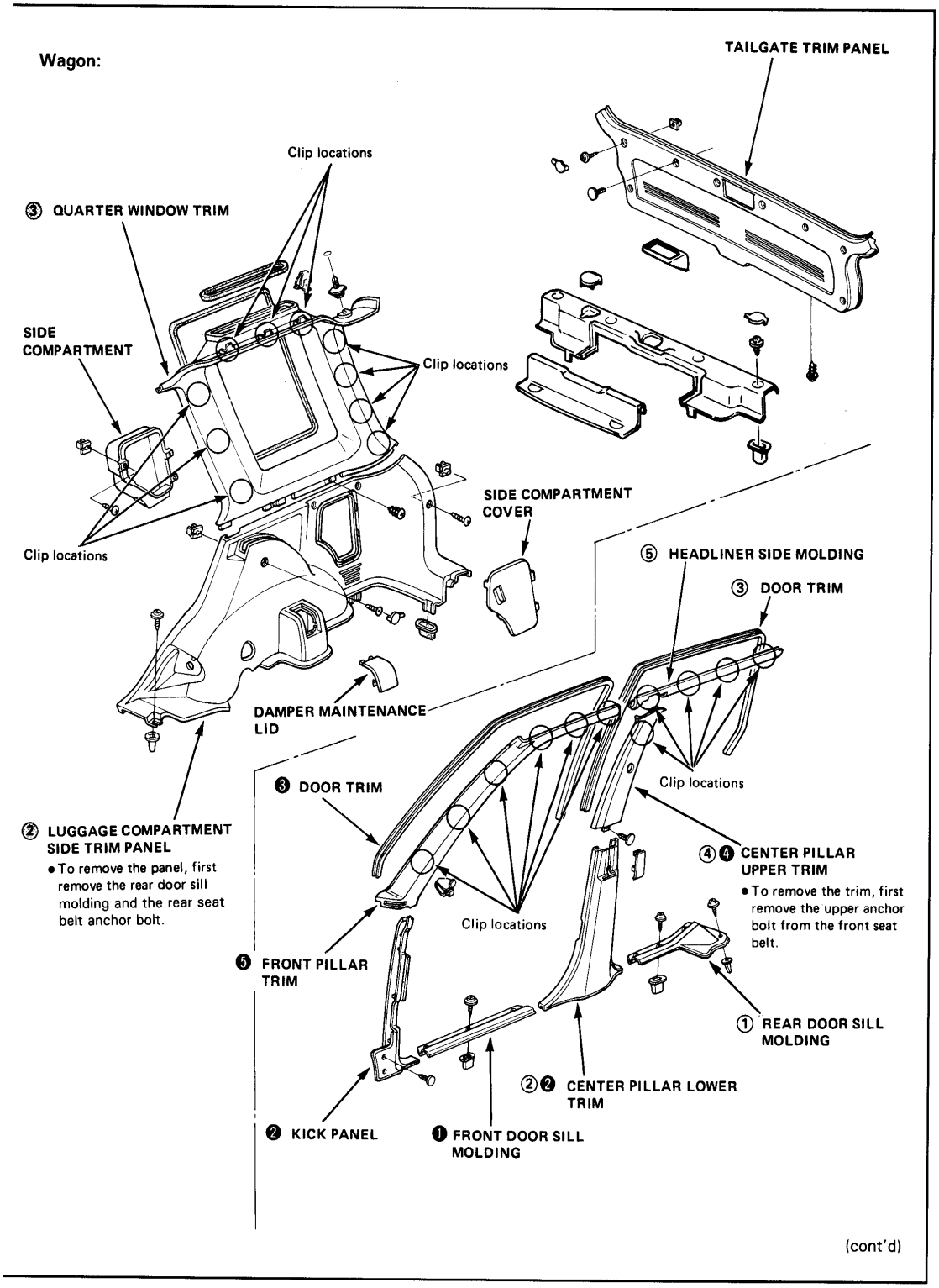
Wagon:
TAILGATE TRIM PANEL
Clip locations
③ QUARTER WINDOW TRIM
SIDE COMPARTMENT
Clip locations
SIDE COMPARTMENT COVER
Clip locations
⑤ HEADLINER SIDE MOLDING
③ DOOR TRIM
DAMPER MAINTENANCE LID
❸ DOOR TRIM
Clip locations
② LUGGAGE COMPARTMENT SIDE TRIM PANEL
• To remove the panel, first remove the rear door sill molding and the rear seat belt anchor bolt.
④❹ CENTER PILLAR UPPER TRIM
• To remove the trim, first remove the upper anchor bolt from the front seat belt.
Clip locations
❺ FRONT PILLAR TRIM
① REAR DOOR SILL MOLDING
②❷ CENTER PILLAR LOWER TRIM
❷ KICK PANEL
❶ FRONT DOOR SILL MOLDING

(cont'd)

22-47

Front Seat

Replacement

Sedan and Hatchback:

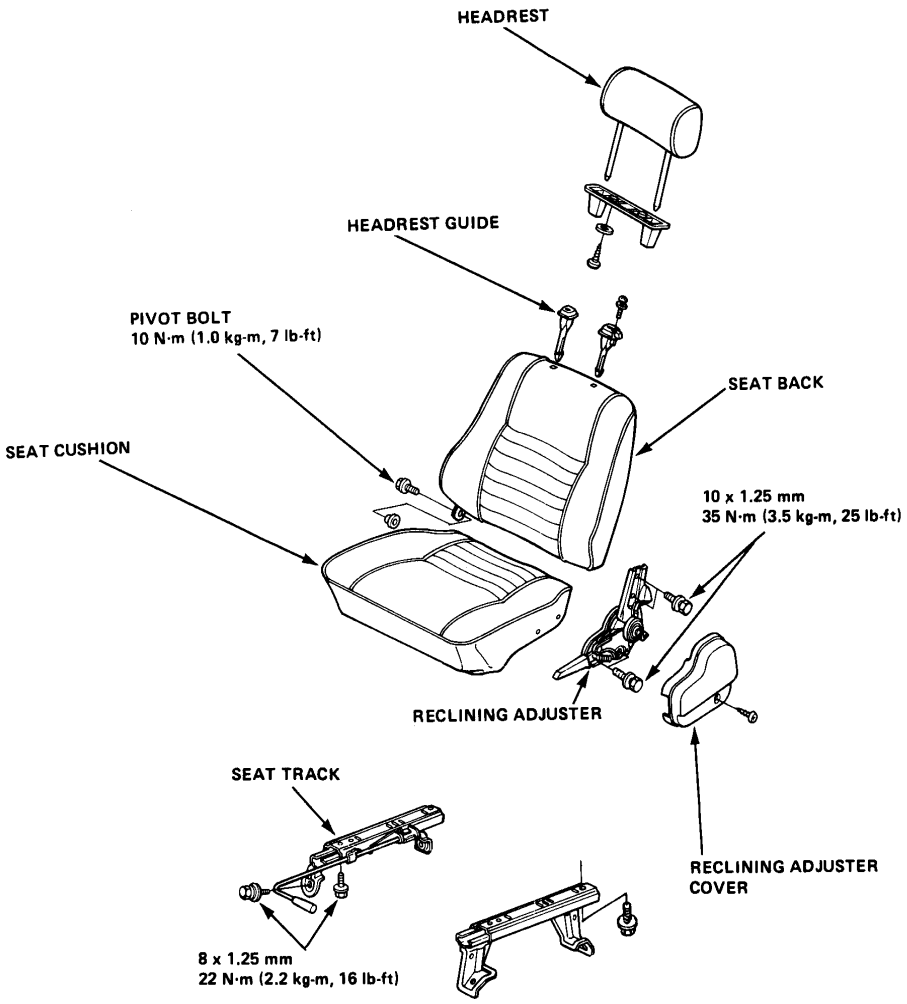

Wagon:

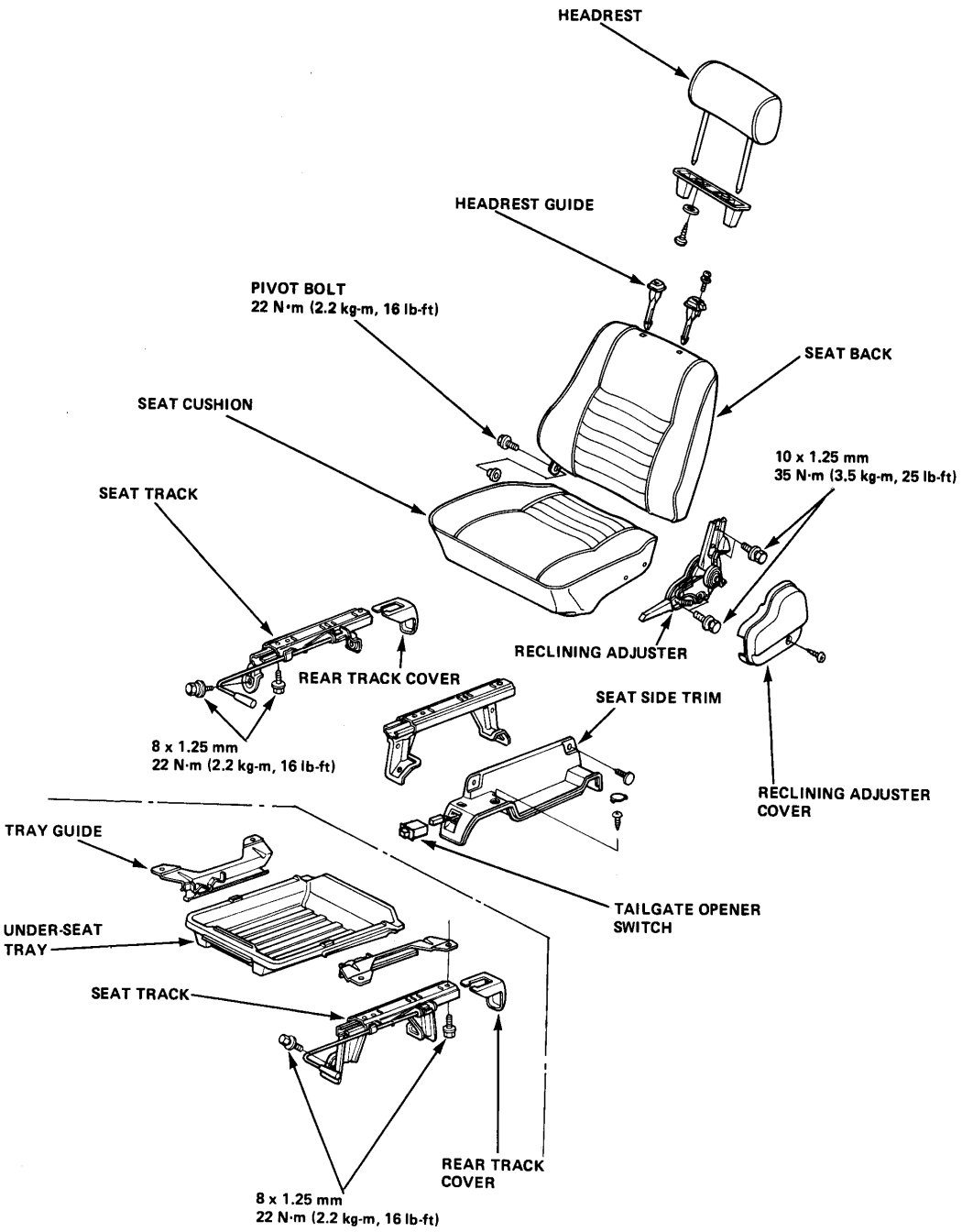
HEADREST
HEADREST GUIDE
PIVOT BOLT
22 N·m (2.2 kg-m, 16 lb-ft)
SEAT BACK
SEAT CUSHION
10 x 1.25 mm
35 N·m (3.5 kg-m, 25 lb-ft)
SEAT TRACK
RECLINING ADJUSTER
REAR TRACK COVER
SEAT SIDE TRIM
8 x 1.25 mm
22 N·m (2.2 kg-m, 16 lb-ft)
RECLINING ADJUSTER
COVER
TRAY GUIDE
TAILGATE OPENER
SWITCH
UNDER-SEAT
TRAY
SEAT TRACK
REAR TRACK
COVER
8 x 1.25 mm
22 N·m (2.2 kg-m, 16 lb-ft)

Rear Seat

Replacement

Sedan:

Disassemble in numbered sequence

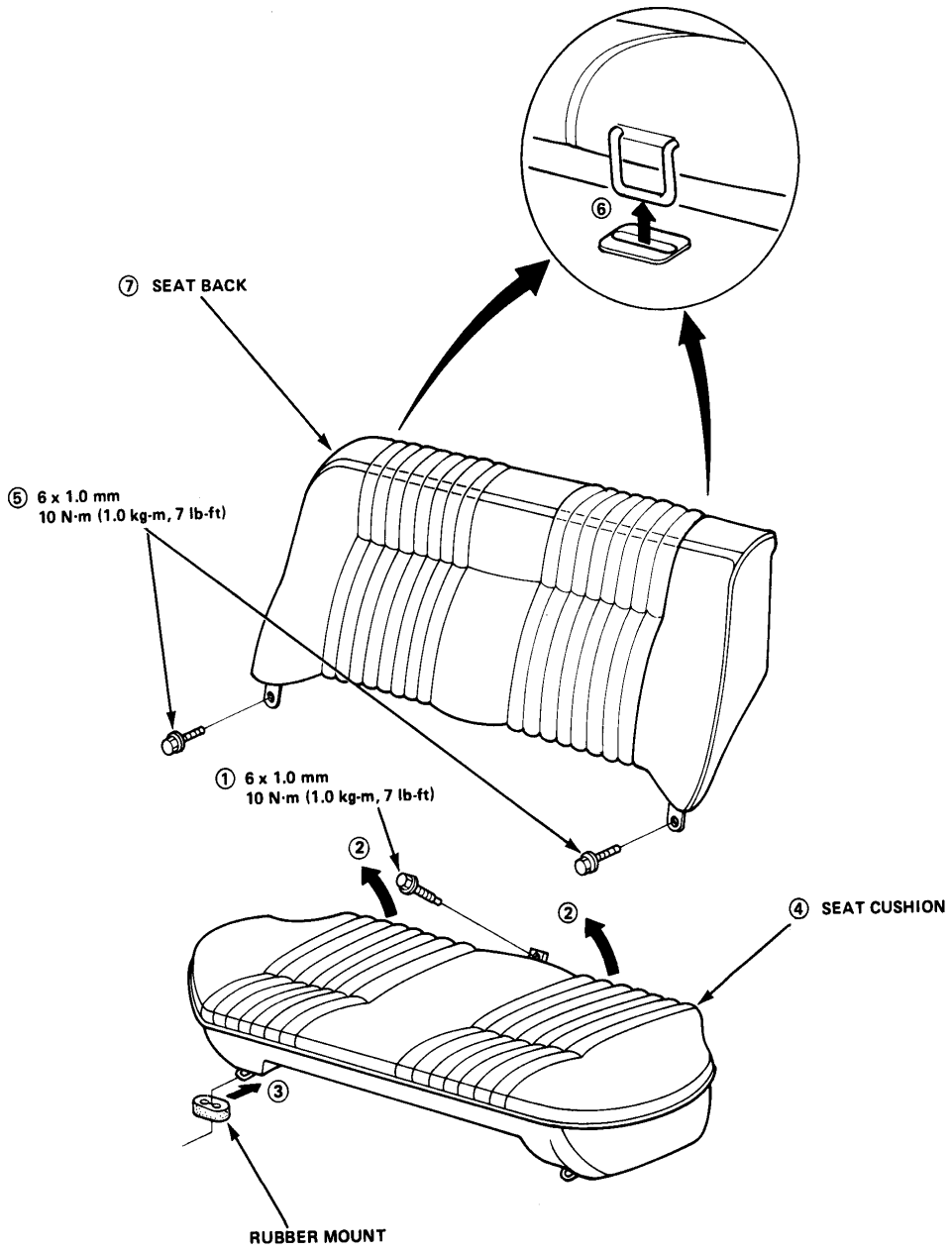

Hatchback:

Disassemble in numbered sequence

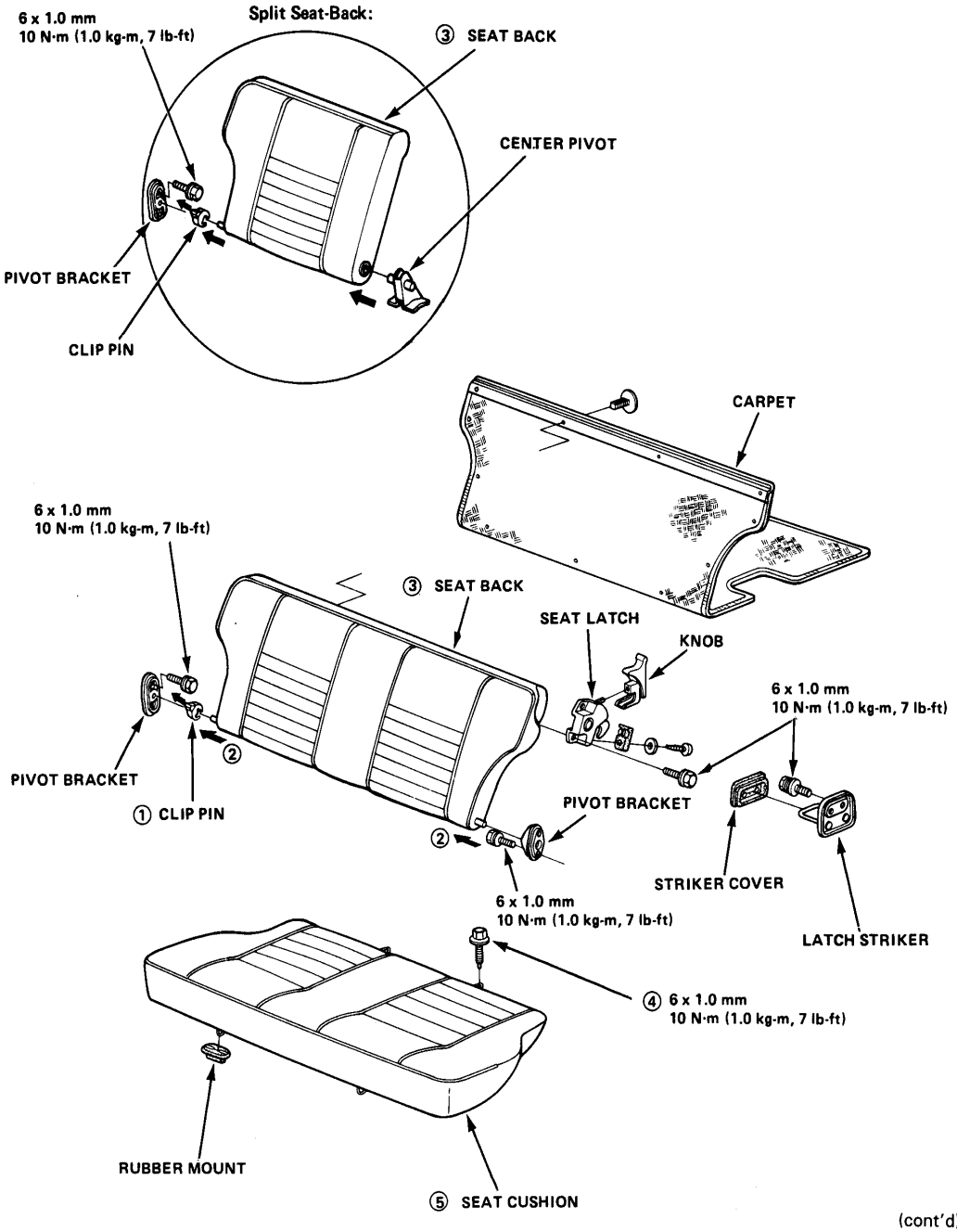

(cont'd)

Rear Seat

Replacement (cont'd)

Pully-adjustable Rear Seat

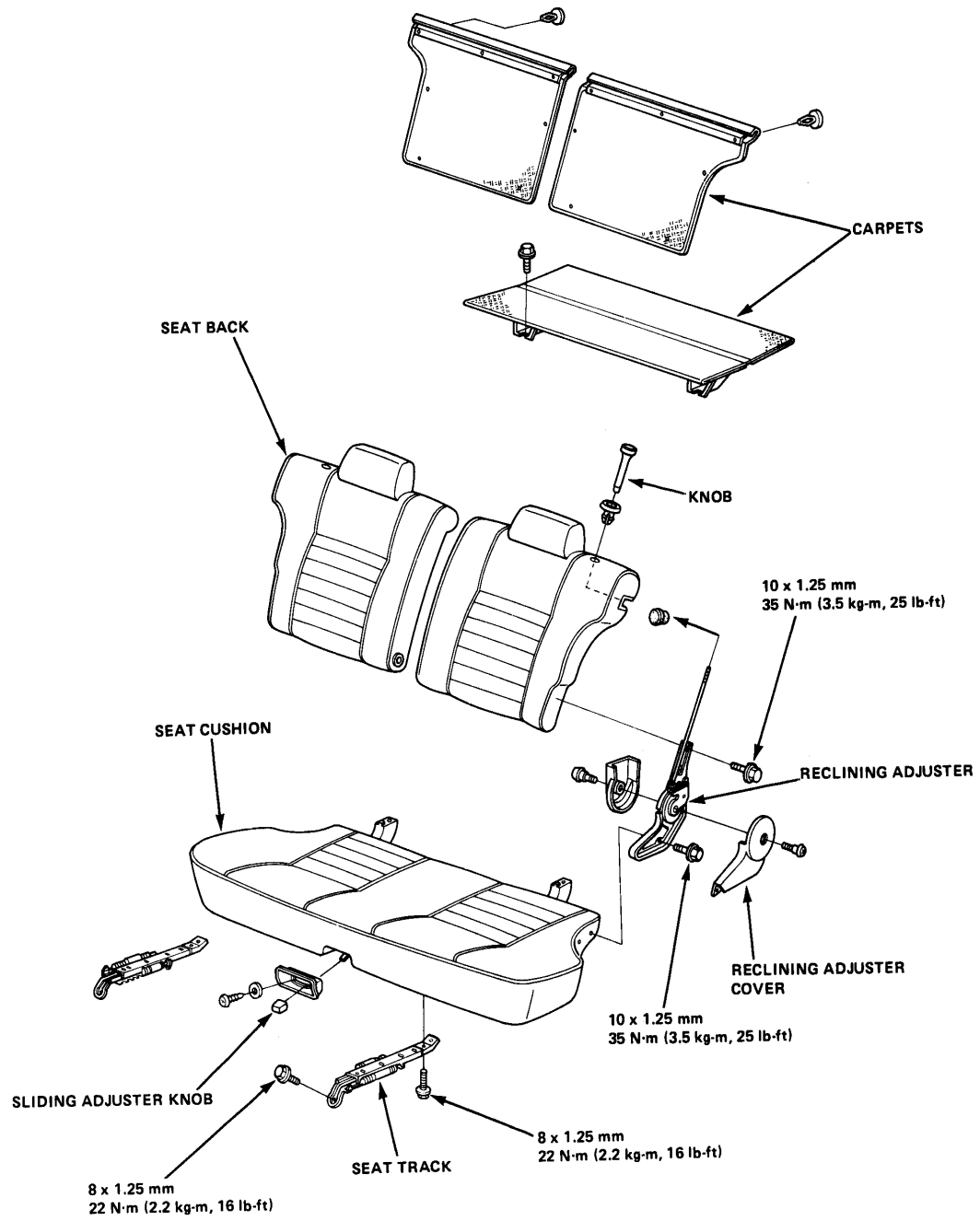

Wagon:

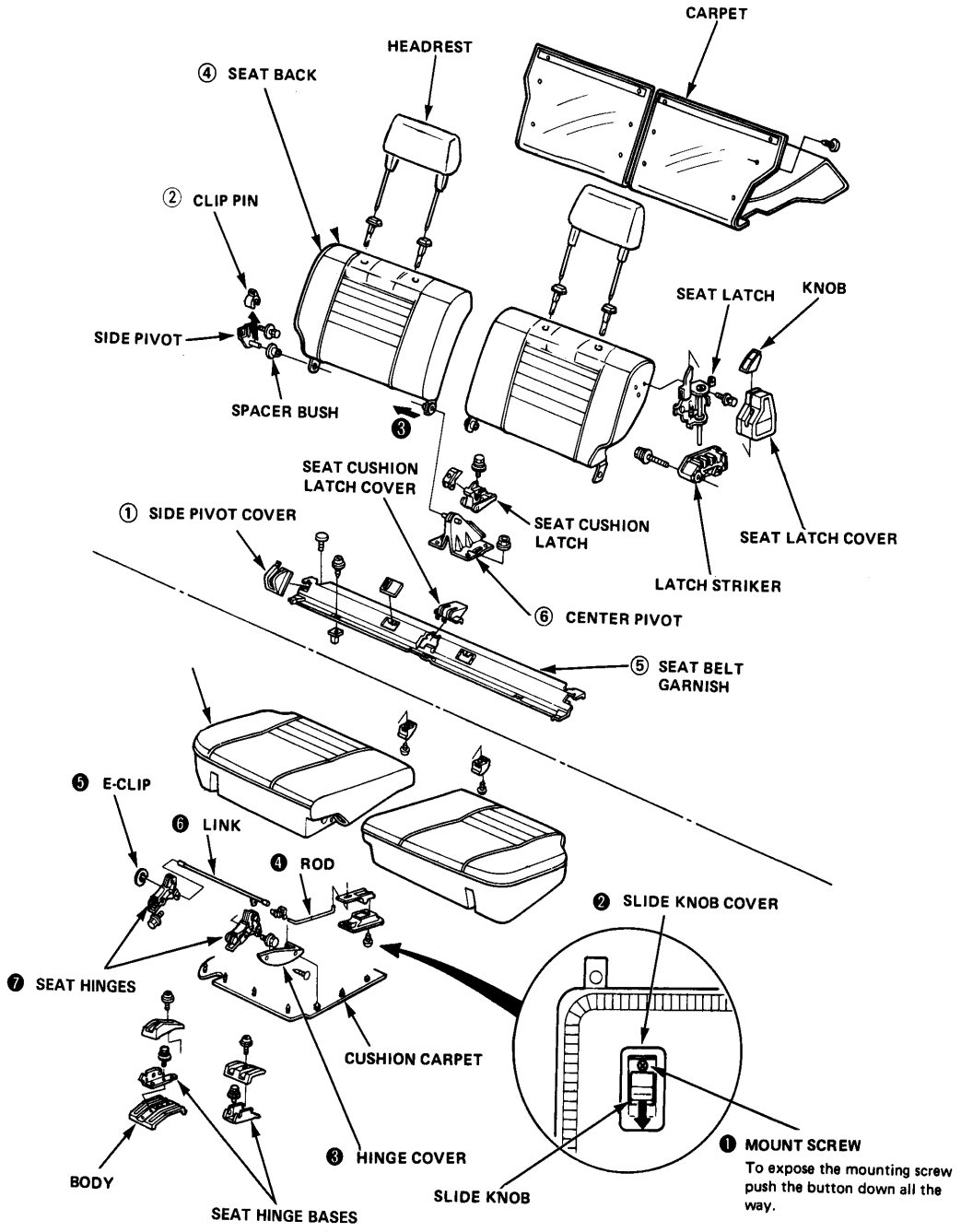
CARPET
HEADREST
④ SEAT BACK
② CLIP PIN
SIDE PIVOT
SPACER BUSH
❸
SEAT LATCH
KNOB
SEAT CUSHION LATCH COVER
① SIDE PIVOT COVER
SEAT CUSHION LATCH
SEAT LATCH COVER
LATCH STRIKER
⑥ CENTER PIVOT
⑤ SEAT BELT GARNISH
❺ E-CLIP
❻ LINK
❹ ROD
❷ SLIDE KNOB COVER
❼ SEAT HINGES
CUSHION CARPET
❸ HINGE COVER
BODY
SEAT HINGE BASES
SLIDE KNOB
❶ MOUNT SCREW
To expose the mounting screw push the button down all the way.

Seat Cover

Replacement

1. Separate the seat cushion and back.
2. Remove all clips on the rear of the seat, and separate the cover from the seat.

Front Seat Back:

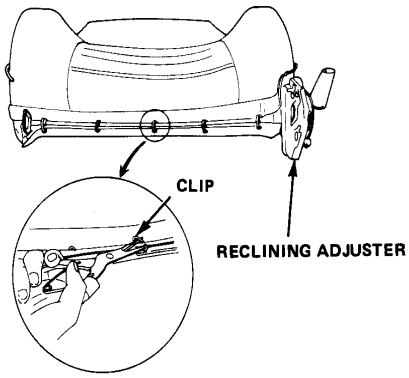

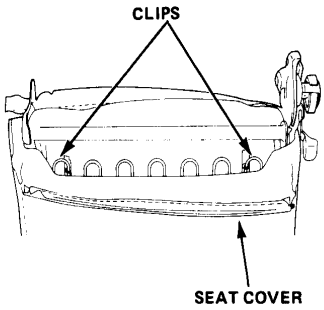

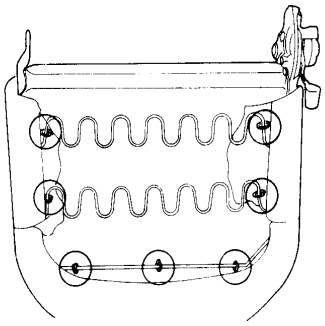

Front Seat Cushion:

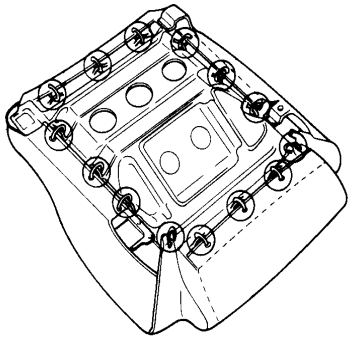

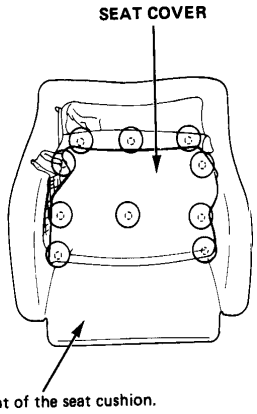

3. Remove the rear seat cover by same method.

   NOTE: To prevent wrinkles when installing a seat cover, make sure the material is stretched evenly over the frame before securing all the clips.

Front Seat Belts

Replacement

CAUTION: Check the seat belts for damage (page 22-57), and replace them if necessary. Be careful not to damage them during removal and installation.

1. Remove the quarter trim panel (for Hatchback), or the center pillar lower trim (for Sedan and Wagon).
2. Remove the upper anchor bolt, lower anchor bolt and retractor bolt with a 17 mm socket or box-end wrench.
3. Slide the front seat foward until the seat belt center anchor bolt is accessible, then remove the bolt and the center anchor.

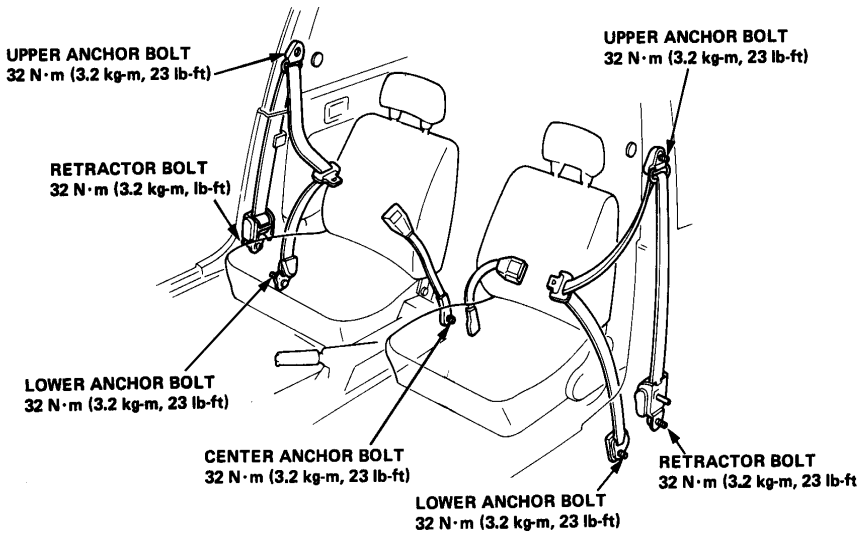

4. Install the seat belt in the reverse of removal. Make sure you assemble the washer and collars on the upper and lower anchor bolts.

   NOTE: Before attaching the quarter trim panel, make sure there are no twists in the belt.

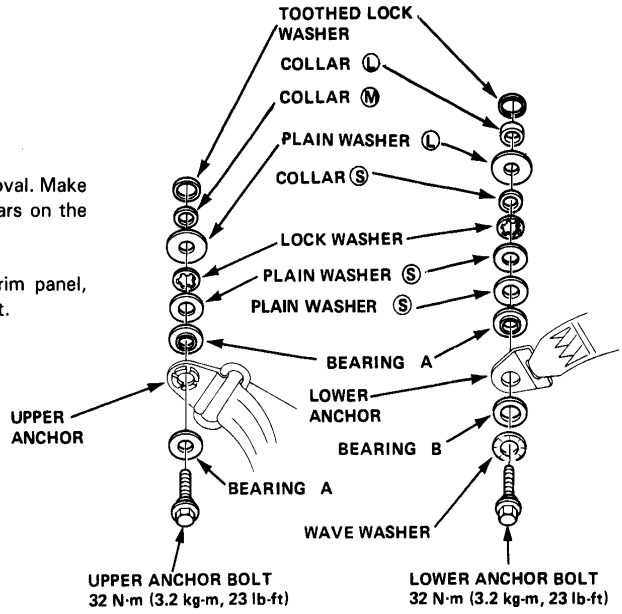

Ⓛ : Large
Ⓜ : Medium
Ⓢ : Small

Rear Seat Belts

Replacement

CAUTION: Check the seat belts for damage (page 22-57), and replace them if necessary. Be careful not to damage them during removal and installation.

1. Remove the rear seat.
2. Remove each anchor bolts and retractor bolts with a 17 mm socket or box-end wrench.

Wagon:

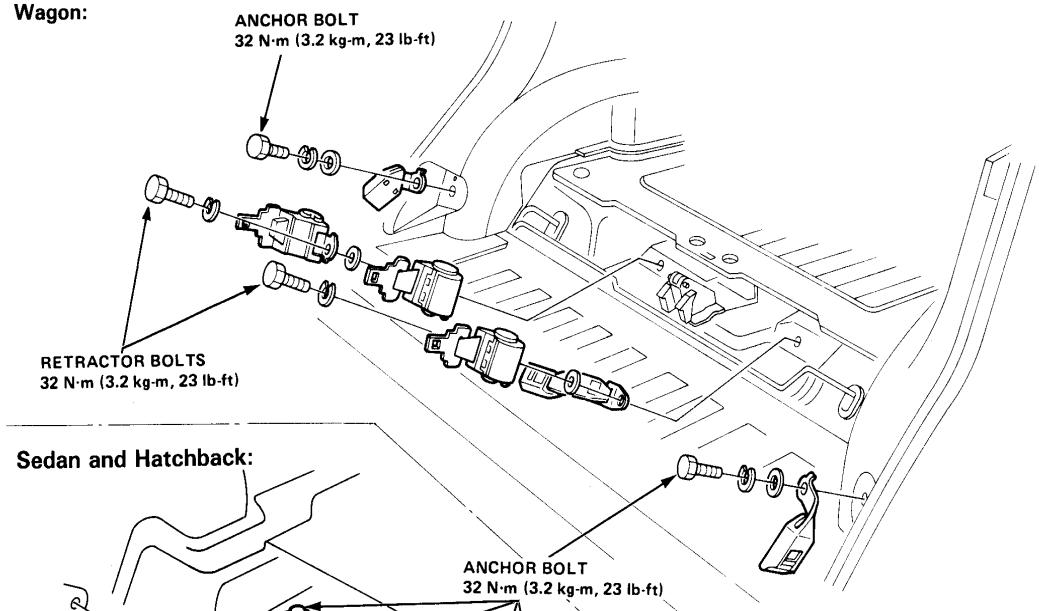

Sedan and Hatchback:

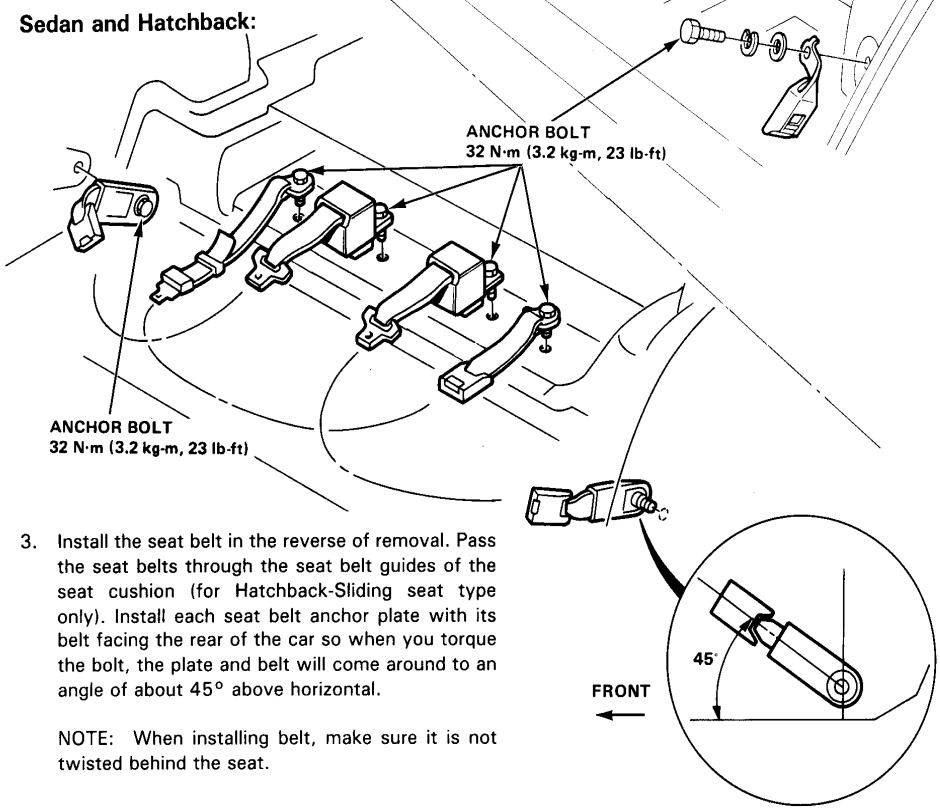

3. Install the seat belt in the reverse of removal. Pass the seat belts through the seat belt guides of the seat cushion (for Hatchback-Sliding seat type only). Install each seat belt anchor plate with its belt facing the rear of the car so when you torque the bolt, the plate and belt will come around to an angle of about 45° above horizontal.

   NOTE: When installing belt, make sure it is not twisted behind the seat.

Seat Belts

Inspection

Retractor Inspection

1. With the retractor installed, check that the belt can be pulled out freely.
2. Make sure that the belt does not lock when the retractor is leaned slowly up to 15° from the mounted position. The belt should lock when the retractor is leaned over 45°.

   CAUTION: Do not attempt to disassemble the retractor.

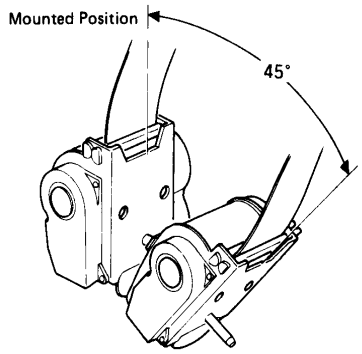

3. Replace the belt with a new one if there is any abnormality.

On the Car-Belt Inspection

1. Check that the belt is not twisted or caught on anything.
2. After installing the anchors, check for free movement on its retaining bolt. If necessary, remove the bolt and check that the washers and other parts are not damaged or are installed properly. (Front seat belt only)
3. Check the belts for fouling, damage or discoloration. Clean with a shop towel if fouled.
4. Check that the belt is not locked when pulled out slowly. The belt is designed to lock only during a sudden stop or impact.
5. Make sure that the belt will retract automatically when released.
6. Replace the belt with a new one if there is any abnormality.

Rear View Mirror

Replacement

1. Remove the rubber damper.
2. Pry the cover off using a flat-head screwdriver.

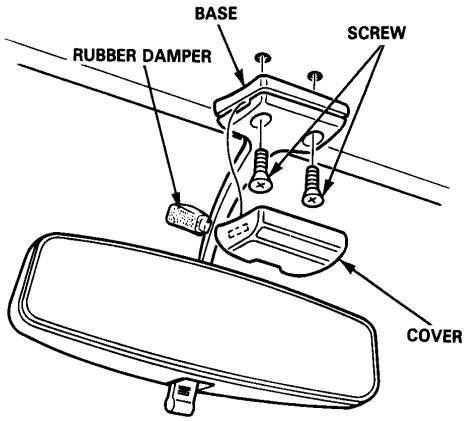

3. Remove both mounting screws from the mirror base, then remove the mirror assembly.
4. Remove the base from the rear view mirror.

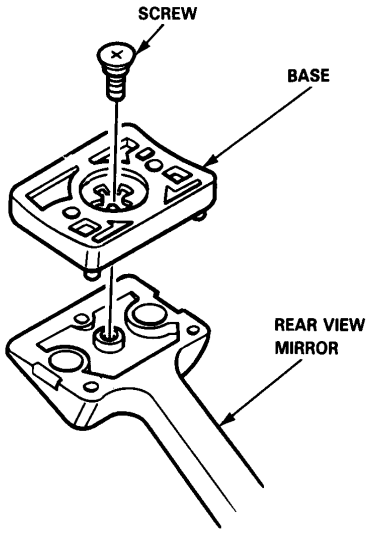

Console

Replacement

1. Remove the gear shift knob (5-speed) or selector lever handle (Automatic).
2. Remove the center and rear caps for the center console, and remove the mounting screws to release the center console.

Sedan and Hatchback:

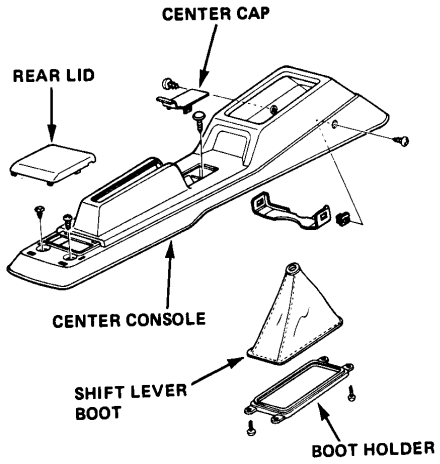

Wagon:

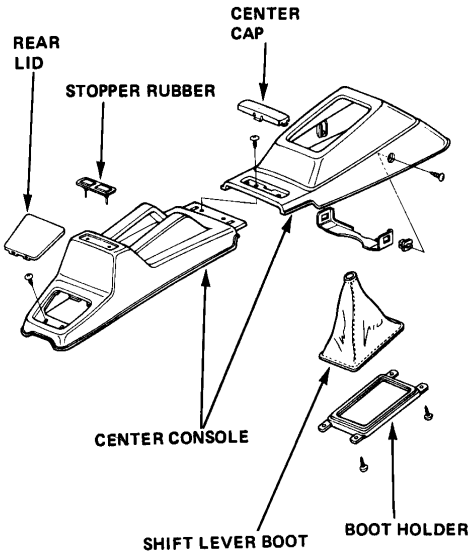

Trunk Box

Replacement

Wagon:

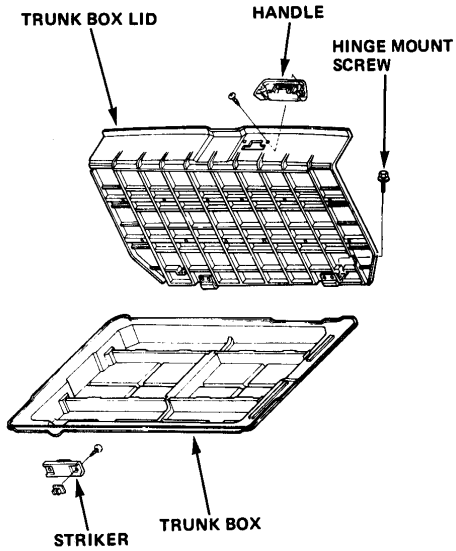

Carpet

Replacement

1. Remove:

   - Front seats.
   - Rear seat cushion.
   - Center console.
   - Right and left kick panels.
   - Door sill moldings.
   - Trunk lid opener.
   - Right and left quarter trim panels.(Hatchback).
   - Front seat belt floor anchor bolts.
   - Right and left center pillar lower trims (Sedan and Wagon).
   - Seat hinge base covers (Wagon).

2. Pry out the clips at the rear edge and under the dashboard, and remove the carpet.

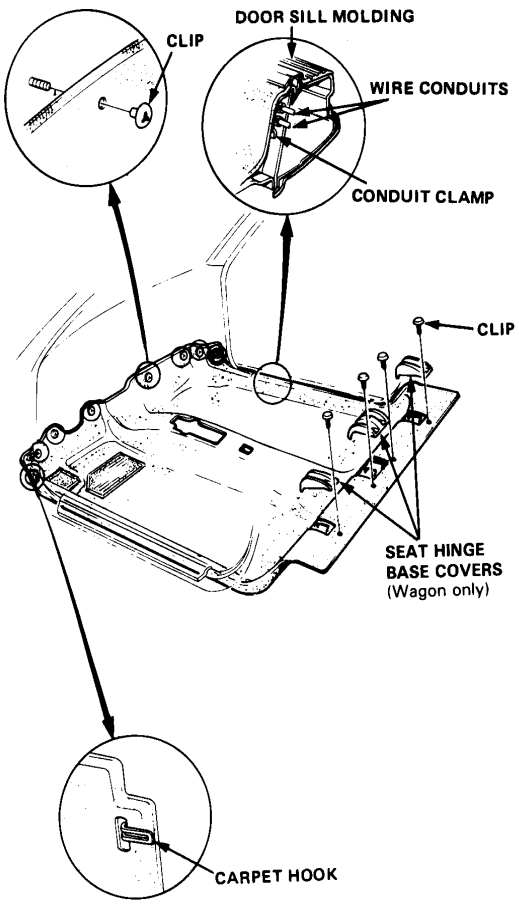

Headliner

Replacement

1. Remove:

   - Sunvisors.
   - Rear view mirror and base.
   - Front pillar garnishes.
   - Interior light.
   - Quarter window trim (except Sedan).
   - Luggage light.
   - Headliner side molding (Sedan and Wagon).
   - Rear roof trim.
   - Grab handle.

2. Remove the rear roof trim and the clips, then remove the headliner.

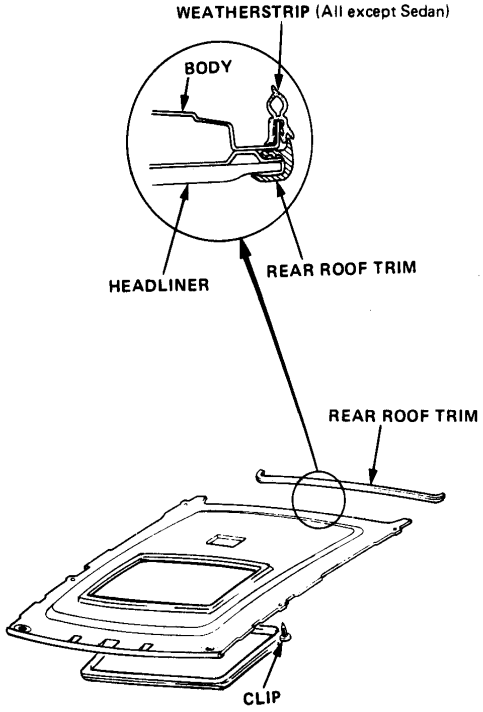

Instrument Panel

Removal

Sedan and Hatchback:

1. Remove the upper caps and the 4 screws.
2. Remove the panel.

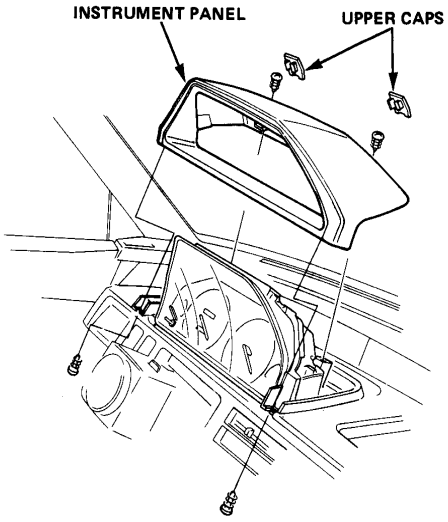

3. Remove the 4 crews, then lift the gauge assembly so you can reach the wire connectors.

   CAUTION: Do not pull on the wires to disconnect connectors.

4. Disconnect the speedometer cable and wire connectors, then remove the gauge assembly.

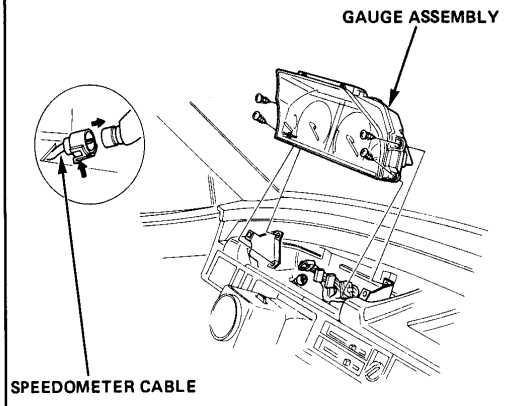

Wagon:

1. Remove the screws and the dashboard lower panel.
2. Reaching from under the dashboard, remove the 4 bolts attaching the instrument panel to the dashboard, then disconnect the wire connectors and the speedometer cable.
3. Remove the instrument panel with the gauge assembly.

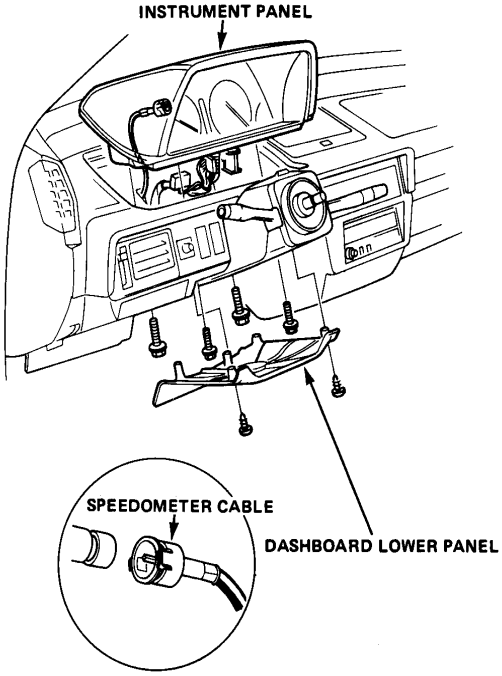

4. Separate the panel and the gauge assembly by removing the screws.

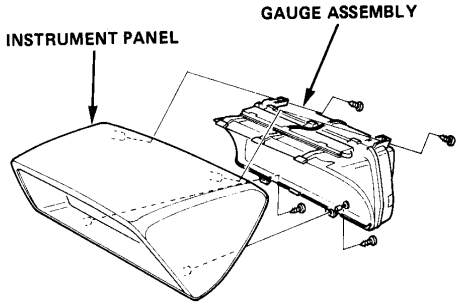

Gauges

Overhaul

Sedan and Hatchback (ND):

CAUTION:
- **Do not touch the printed circuits.**
- **Avoid damaging coupler terminals.**

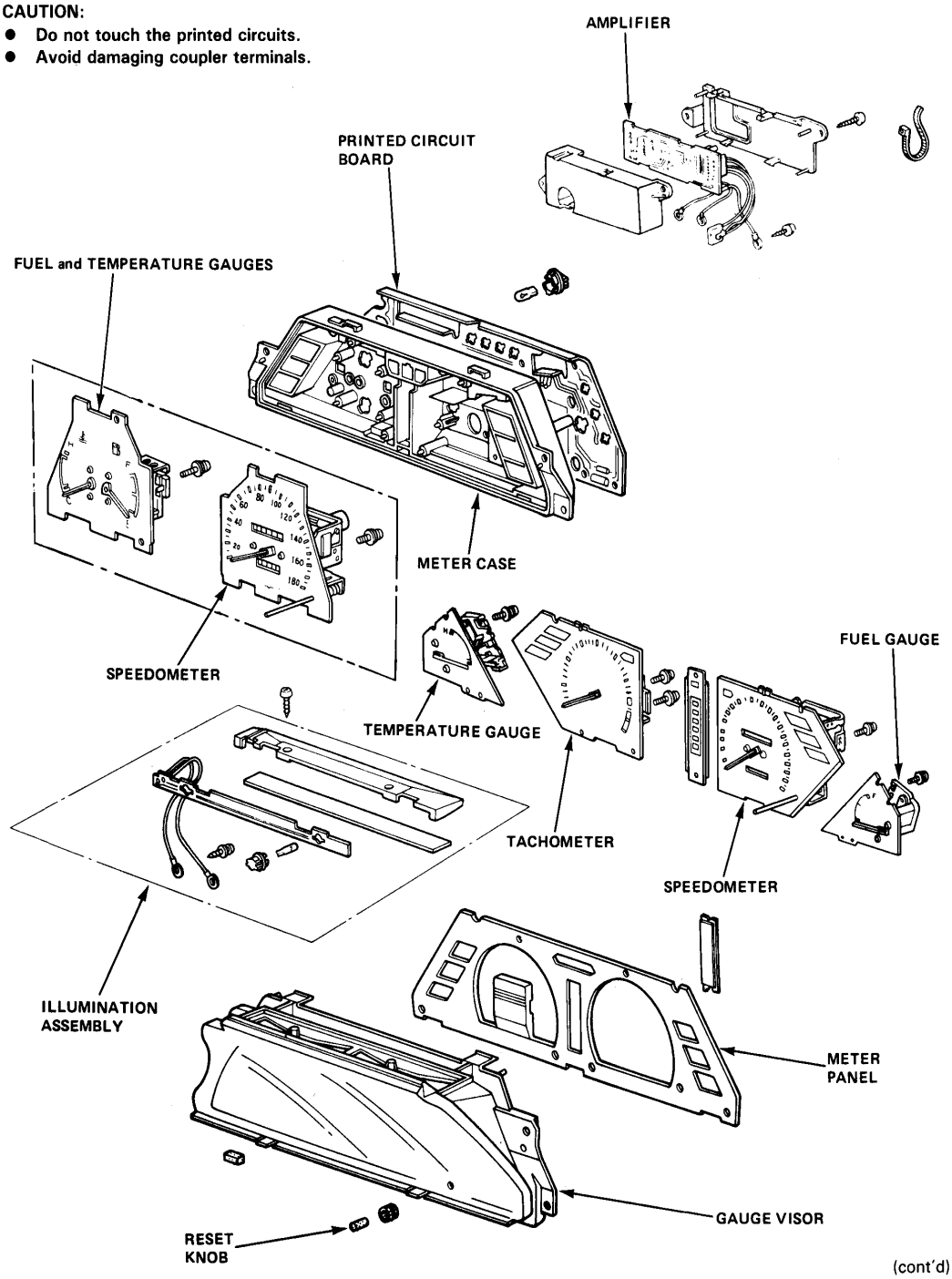

(cont'd)

Gauges

Overhaul (cont'd)

Sedan and Hatchback (NS);

CAUTION:
- **Do not touch the printed circuits.**
- **Avoid damaging coupler terminals.**

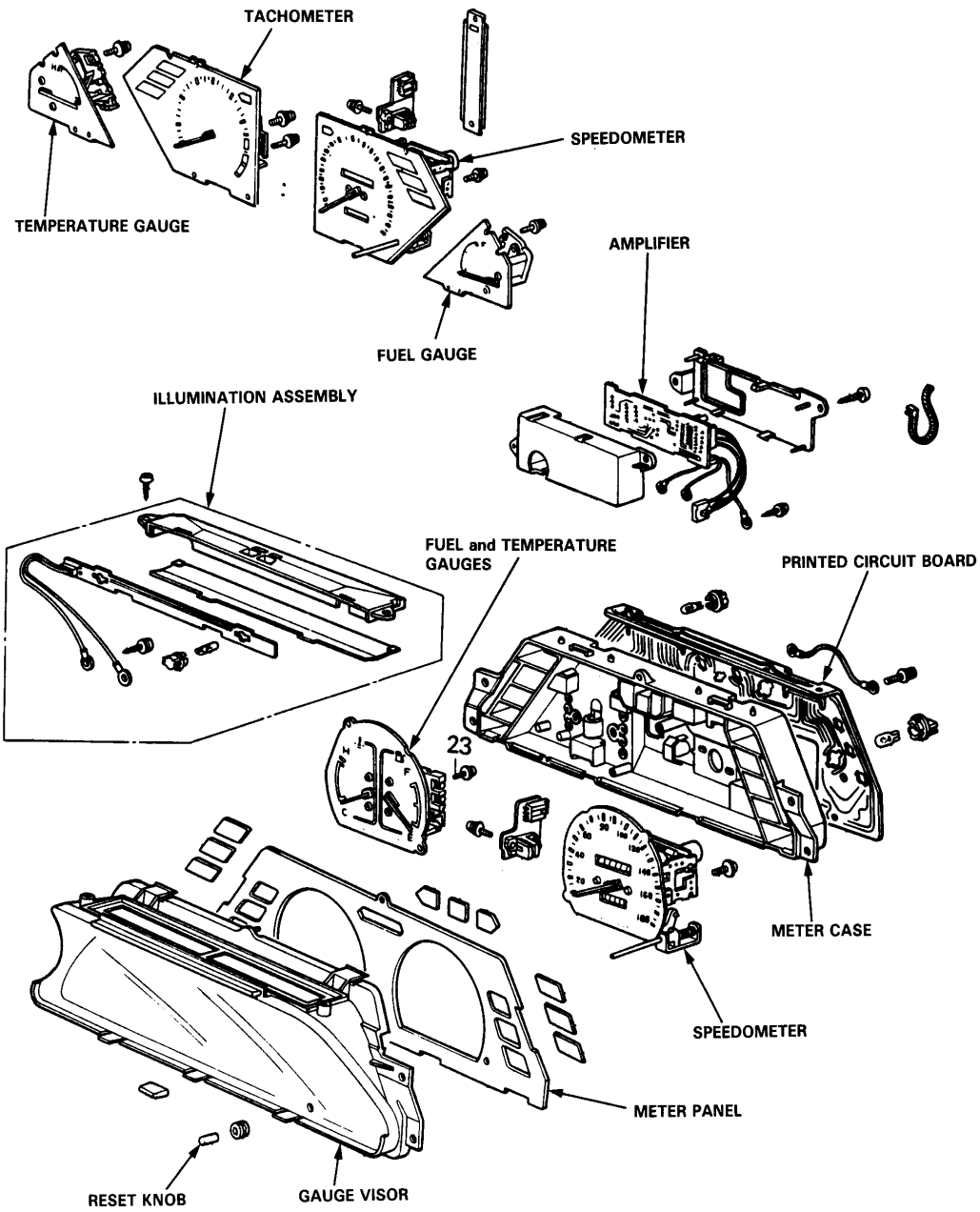

22-62

Wagon 2WD (ND):

CAUTION:
- **Do not touch the printed circuits.**
- **Avoid damaging coupler terminals.**

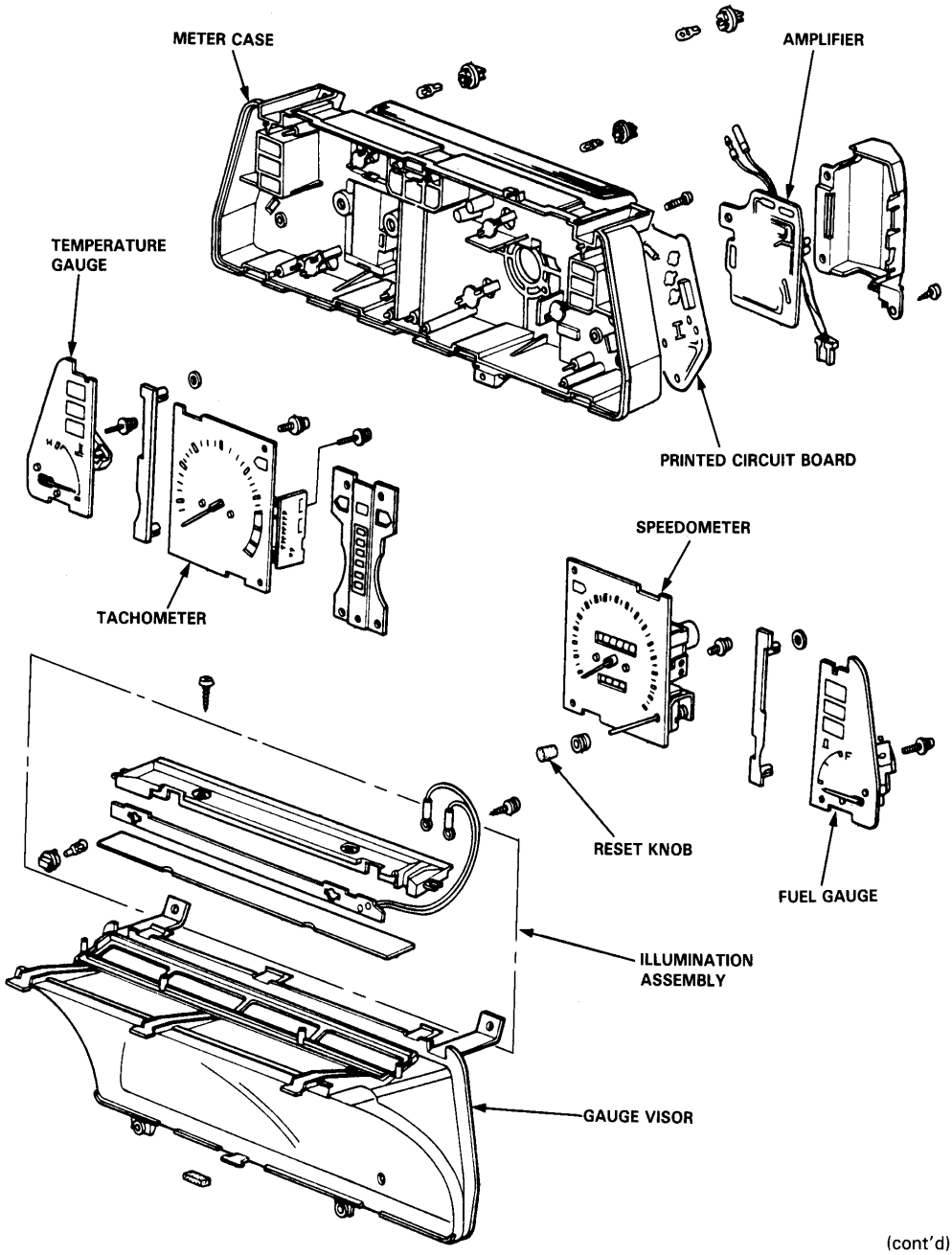

(cont'd)

Gauges

Overhaul (cont'd)

Wagon 2WD (NS):

CAUTION:
- Do not touch the printed circuits.
- Avoid damaging coupler terminals.

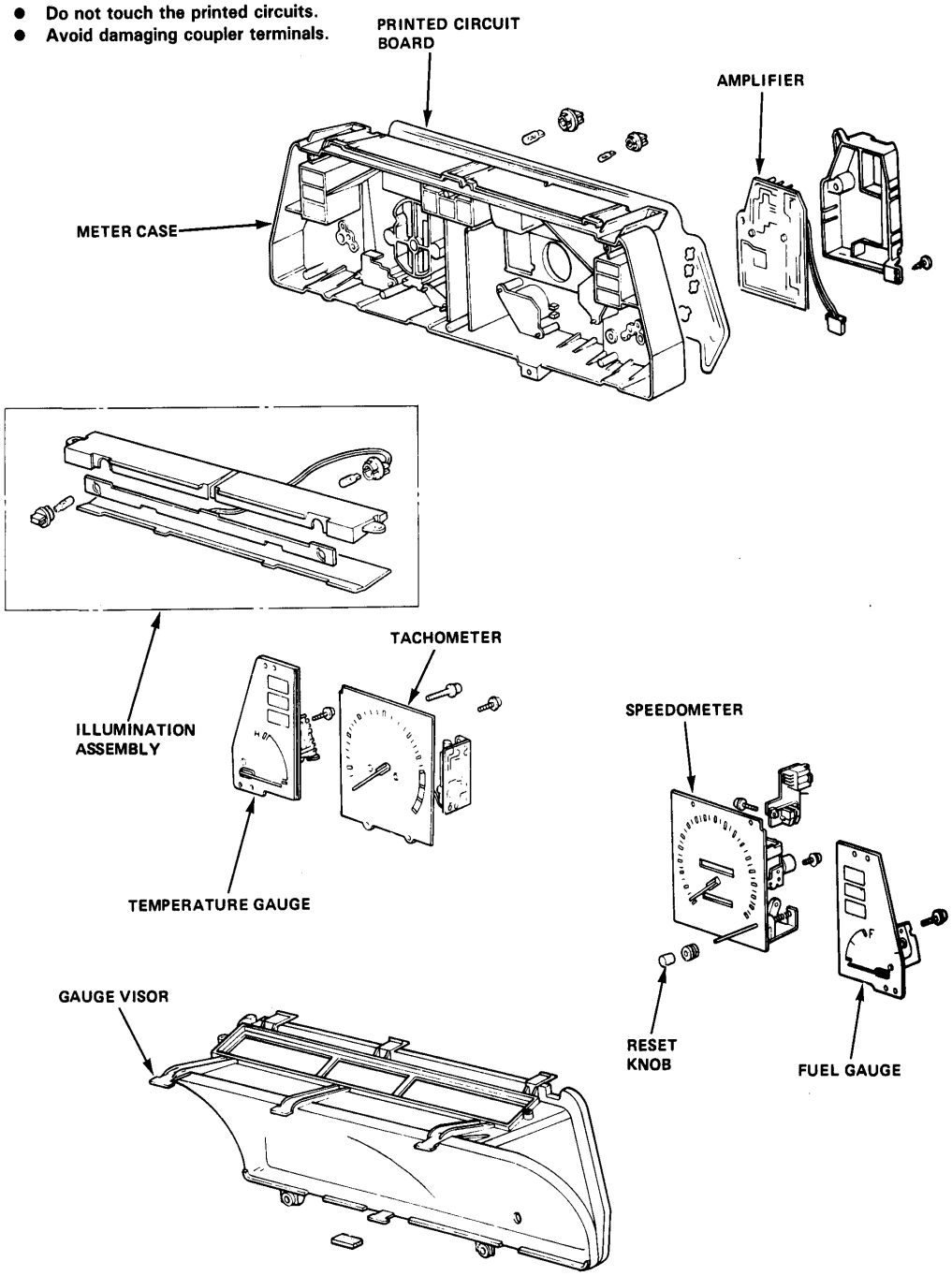

Gauges

Overhaul (cont'd)

Wagon 4WD (ND):

CAUTION:
- **Do not touch the printed circuits.**
- **Avoid damaging coupler terminals.**

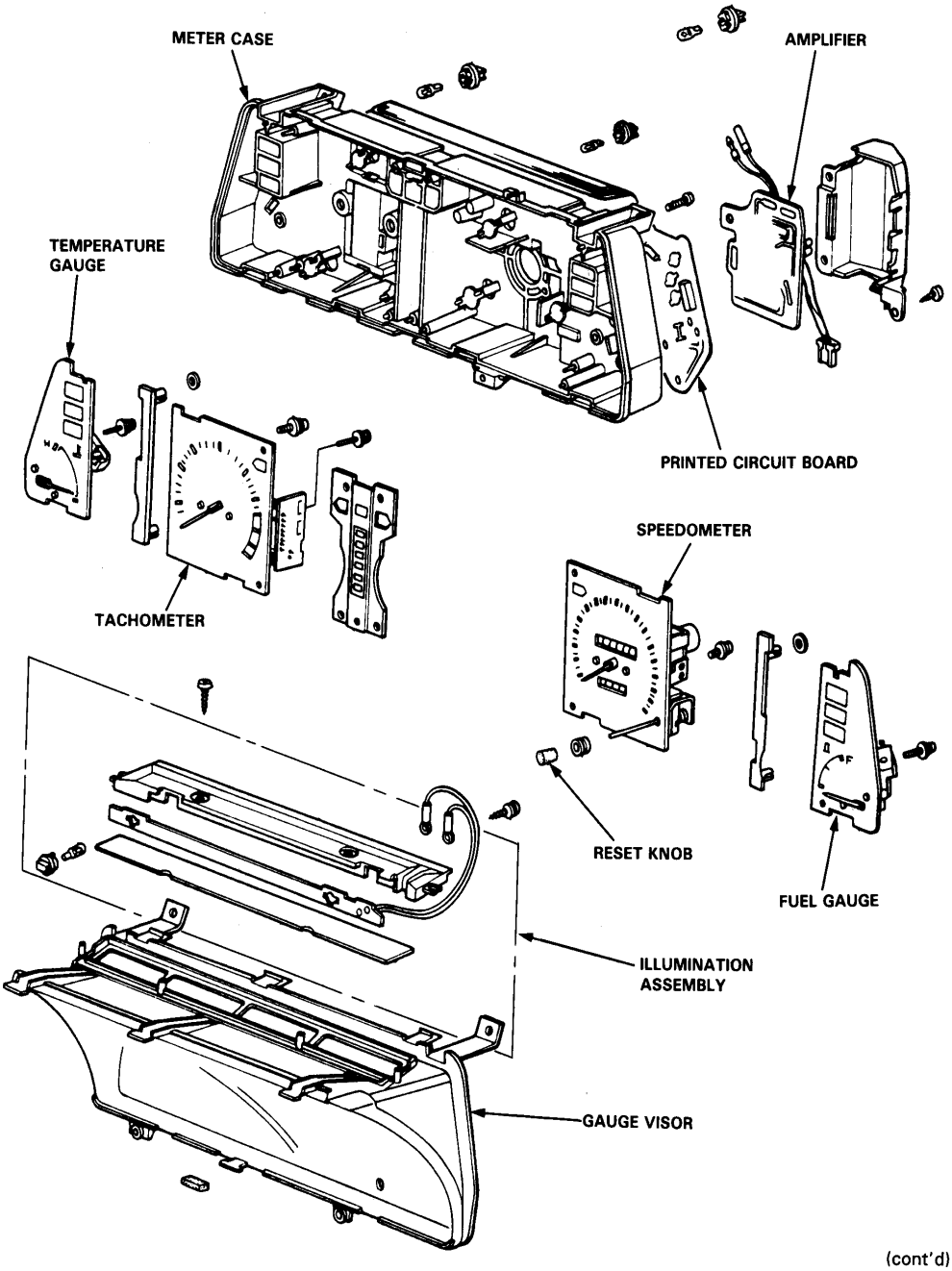

(cont'd)

Gauges

Overhaul (cont'd)

Wagon 4WD (NS):

CAUTION:
- Do not touch the printed circuits.
- Avoid damaging coupler terminals.

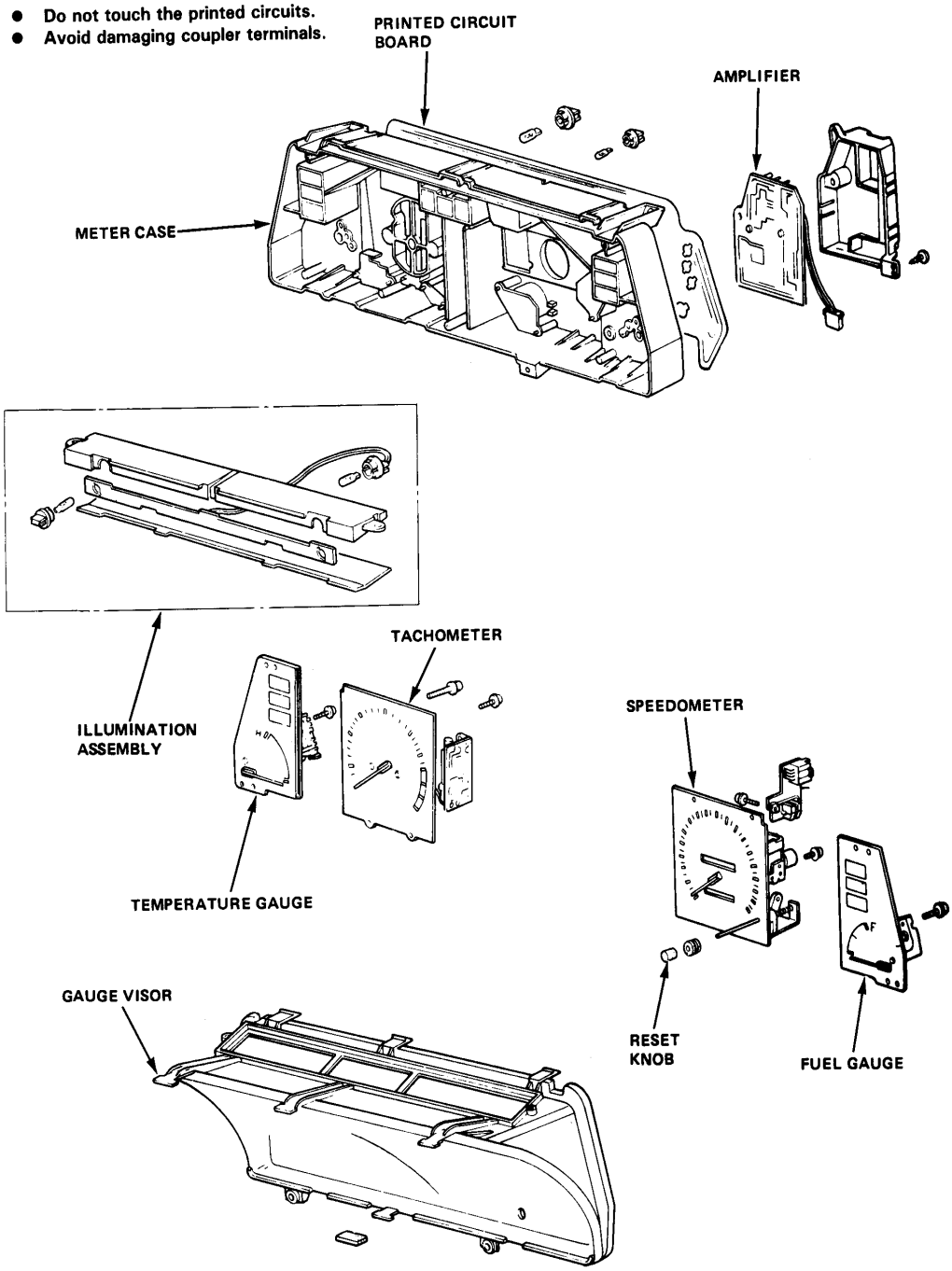

22-66

Dashboard Accessory

Replacement

Sedan and Hatchback:

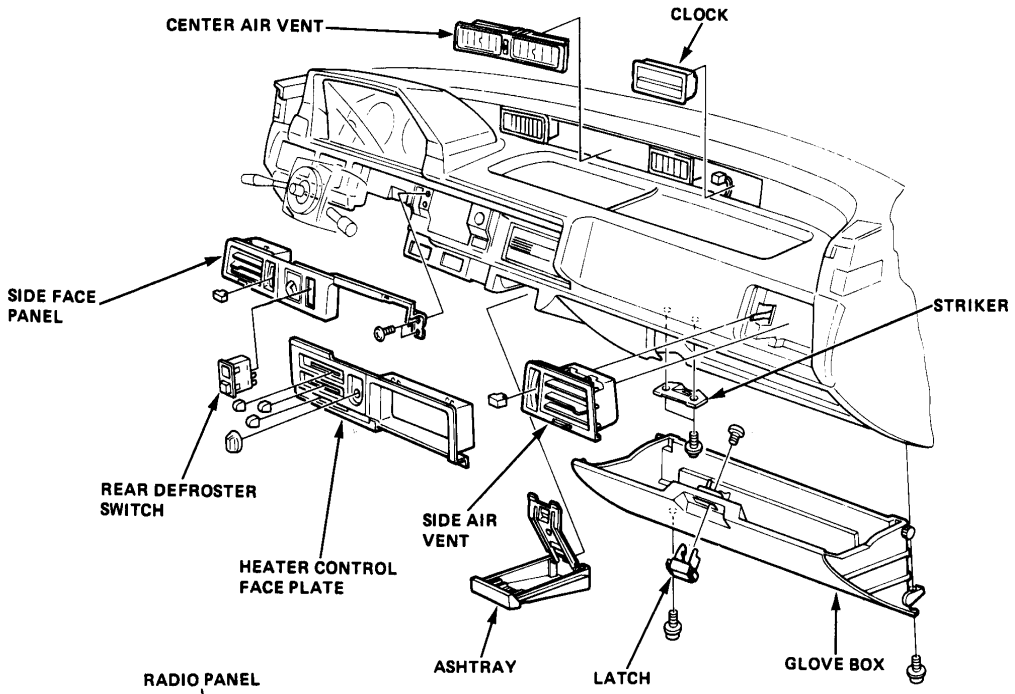

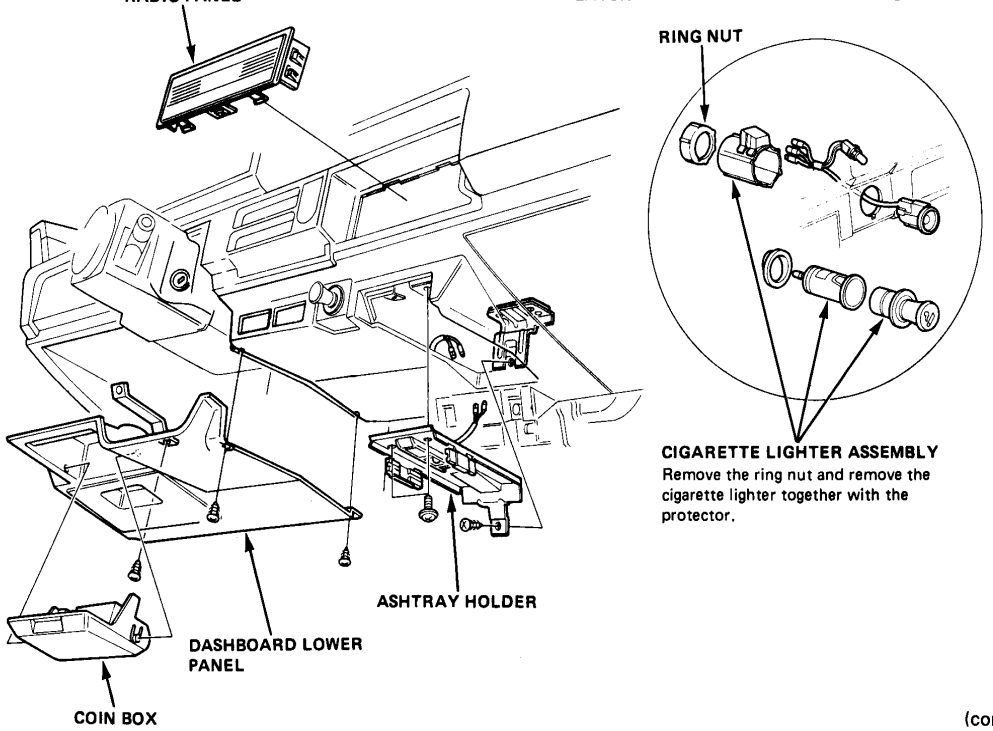

CIGARETTE LIGHTER ASSEMBLY
Remove the ring nut and remove the cigarette lighter together with the protector.

(cont'd)

Dashbord Accessory

Replacement (cont'd)

Wagon:

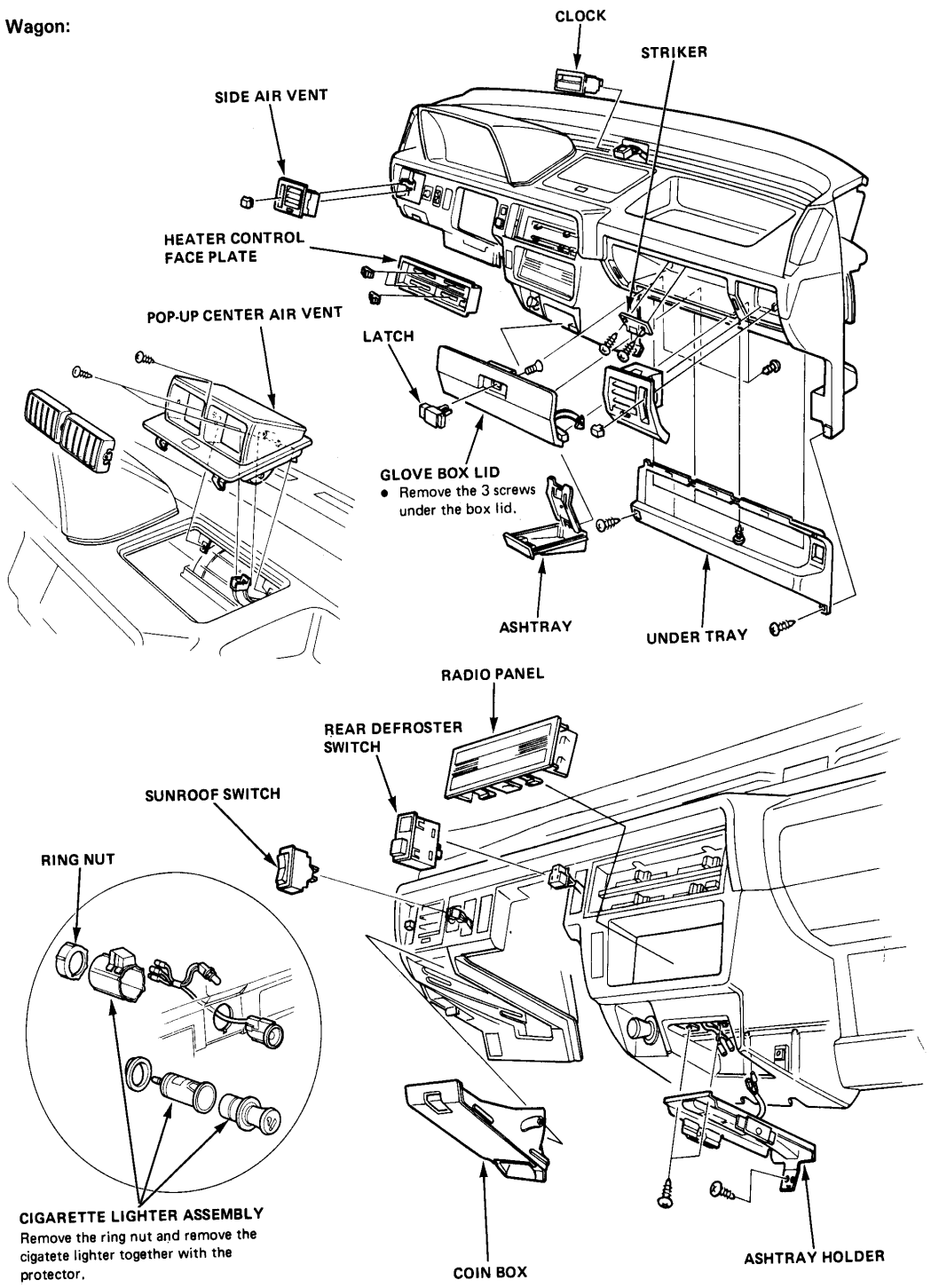

22-68

Dashboard

Replacement

1. To remove the dashboard, first remove the:

   - Steering wheel (Section 19).
   - Hood opener.
   - Right and left side caps.
   - Right and left side defroster garnish (Wagon).
   - Center air outlet (Sedan and Hatchback).
   - Clock (Wagon).
   - Ashtray.

2. Remove the dashboard lower panel, then disconnect the ground and speedometer cables from under the dashboard.

3. Remove the glove box (Sedan and Hatchback) or the dashoard under tray (Wagon), then disconnect the antenna cable.

4. Remove the heater control face plate and the 3 screws attaching the heater control panel to the dashboard.

5. Disconnect the instrument wire harness from the fuse box. (See section 27 for connector locations.)

6. Remove the dashboard mounting bolts.

7. Lift the dashboard as you pull so it will slide up and off the guide pin at the middle; hold it from underneath so it won't fall when it comes off the pin.

Sedan and Hatchback:

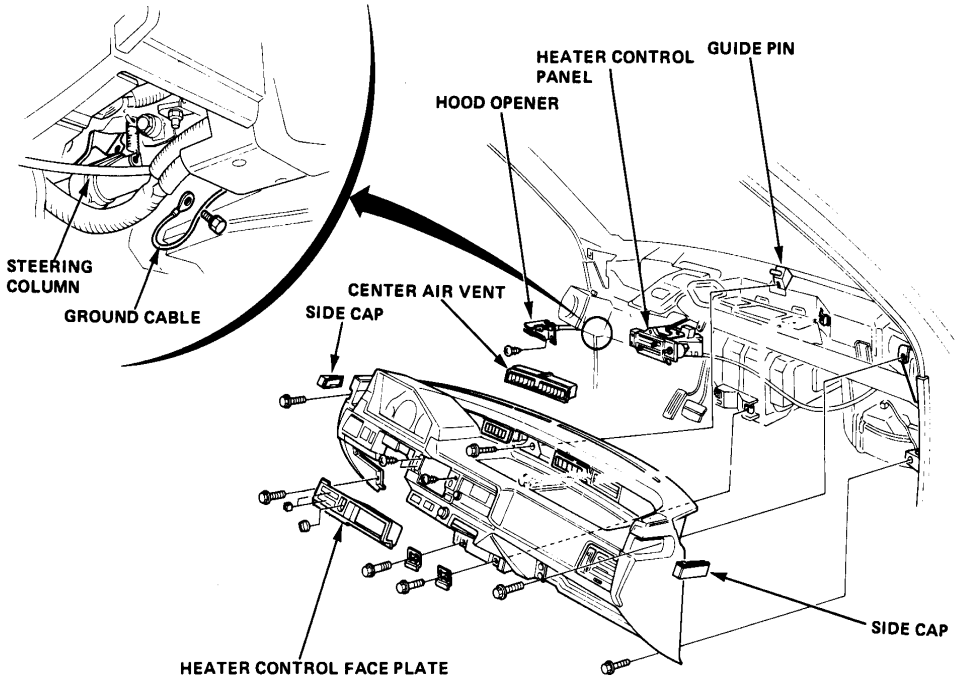

(cont'd)

Dashboard

Replacement (cont'd)

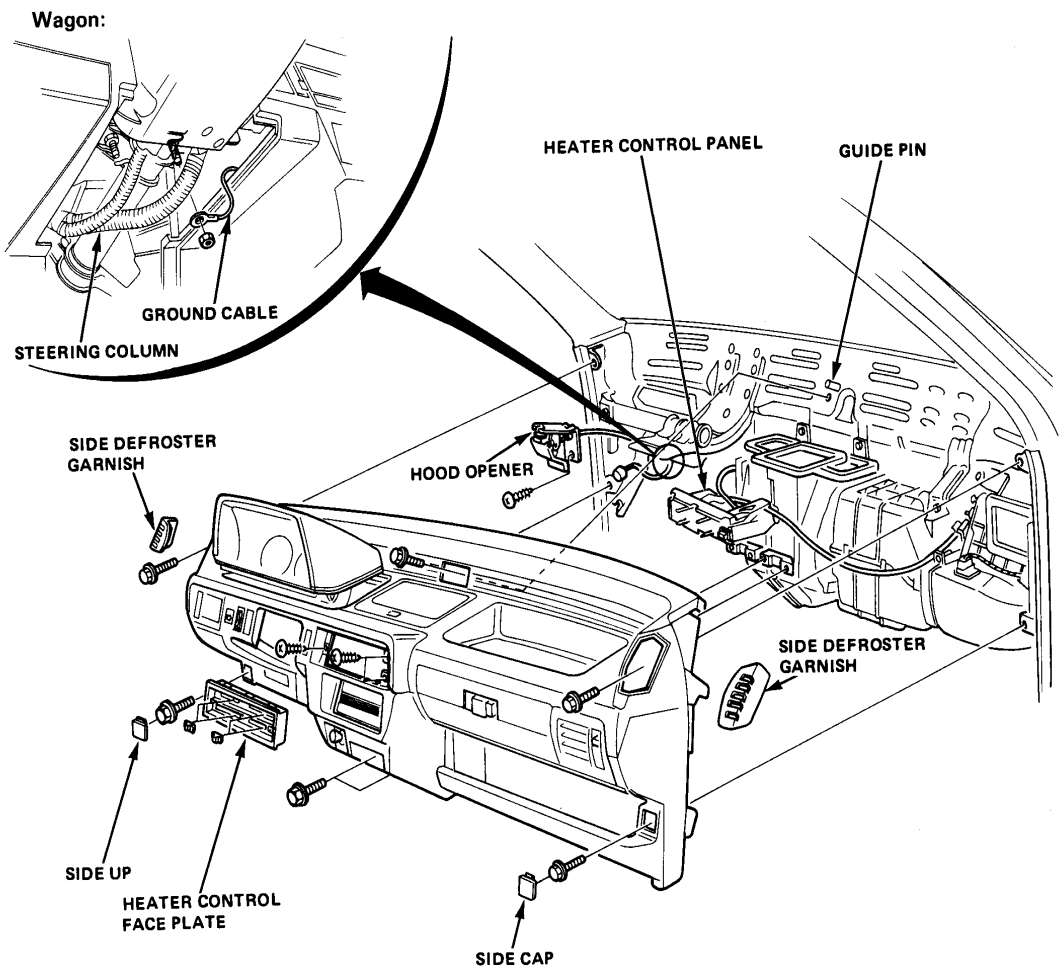

8. Install the dashboard in the reverse order of removal. Tighten the bolts gradually, in an alternating pattern, checking for dashboard fit and wire routing.

CAUTION:
- **Make sure the dashboard fits onto the guide pin correctly.**
- **Before tightening the dashboard bolts, make sure the instrument wire harness is not pinched.**

Front Grille Area/Rear Panels

Front Grille Area Replacement

1. Remove the screws and the front grille.
2. Remove the right and left front side markers.
3. Remove the screws and the headlight garnish.
4. Remove the lower and side mount bolts, then remove the front panel by removing the upper bolts.

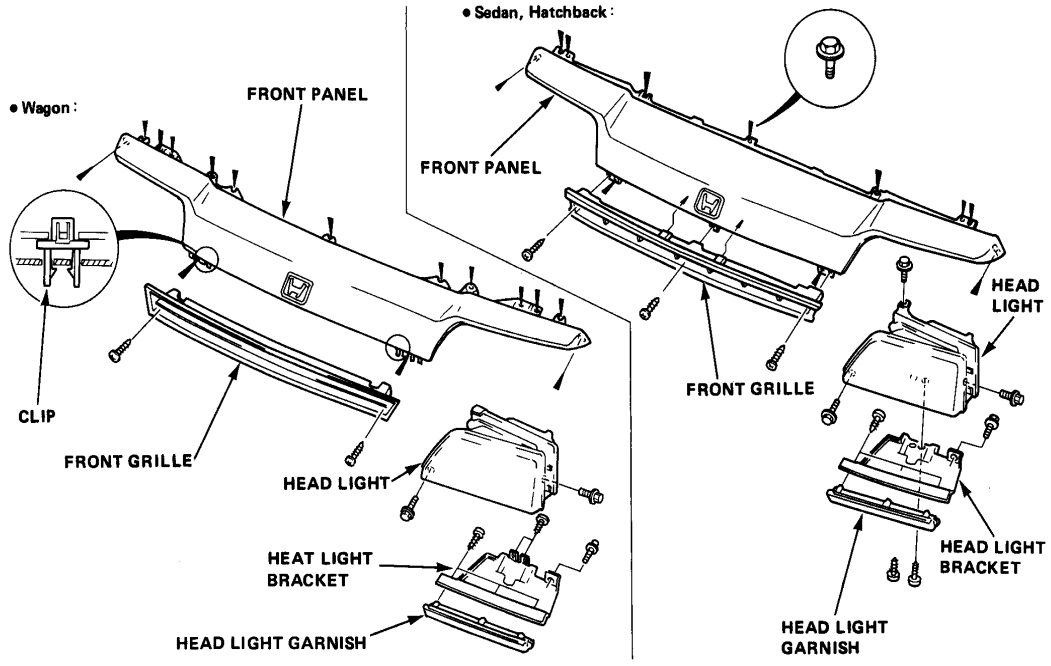

Rear Panels Replacement

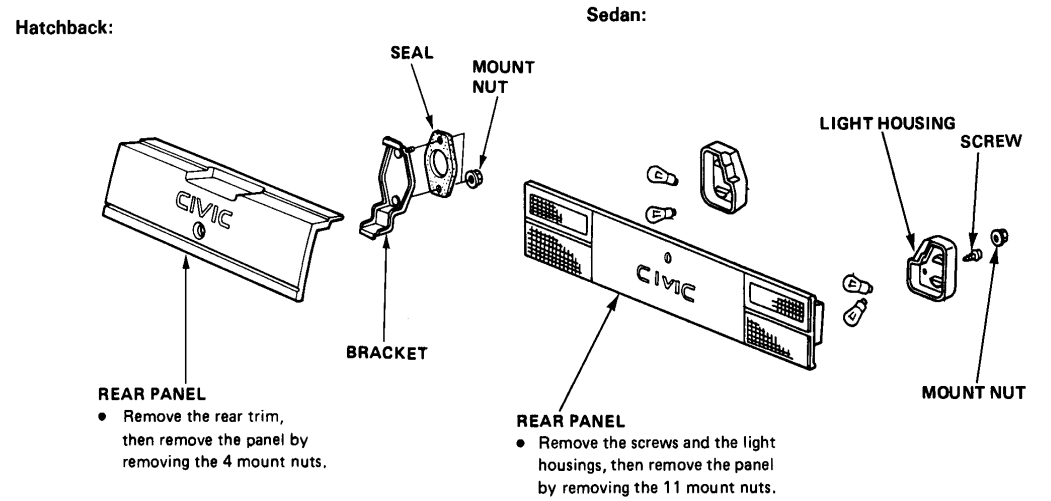

Tailgate Spoiler

Replacement

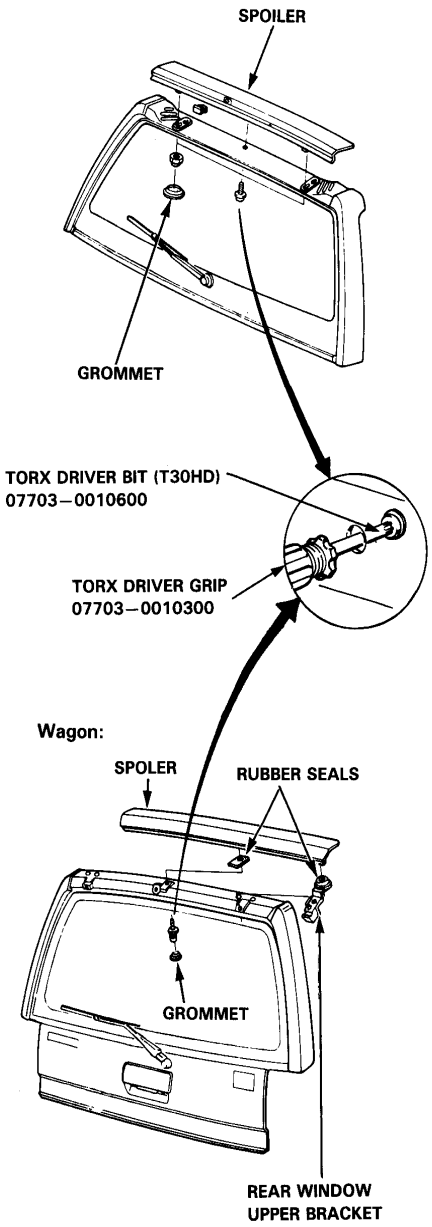

Spare Tire Carrier (Wagon 4WD Only)

Replacement

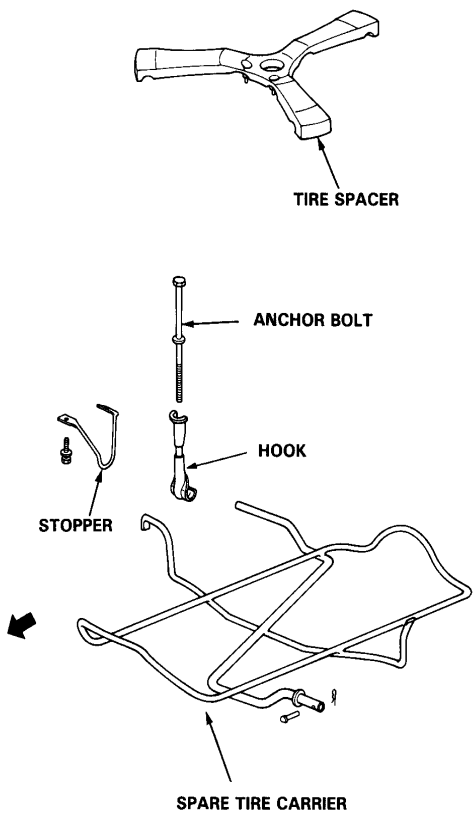

Front Bumper

Replacement

1. Remove the bumper lower mount bolts and the bumper mount bolts.
2. Remove the bumper by sliding it to the front.
3. Disconnect the wire connectors.

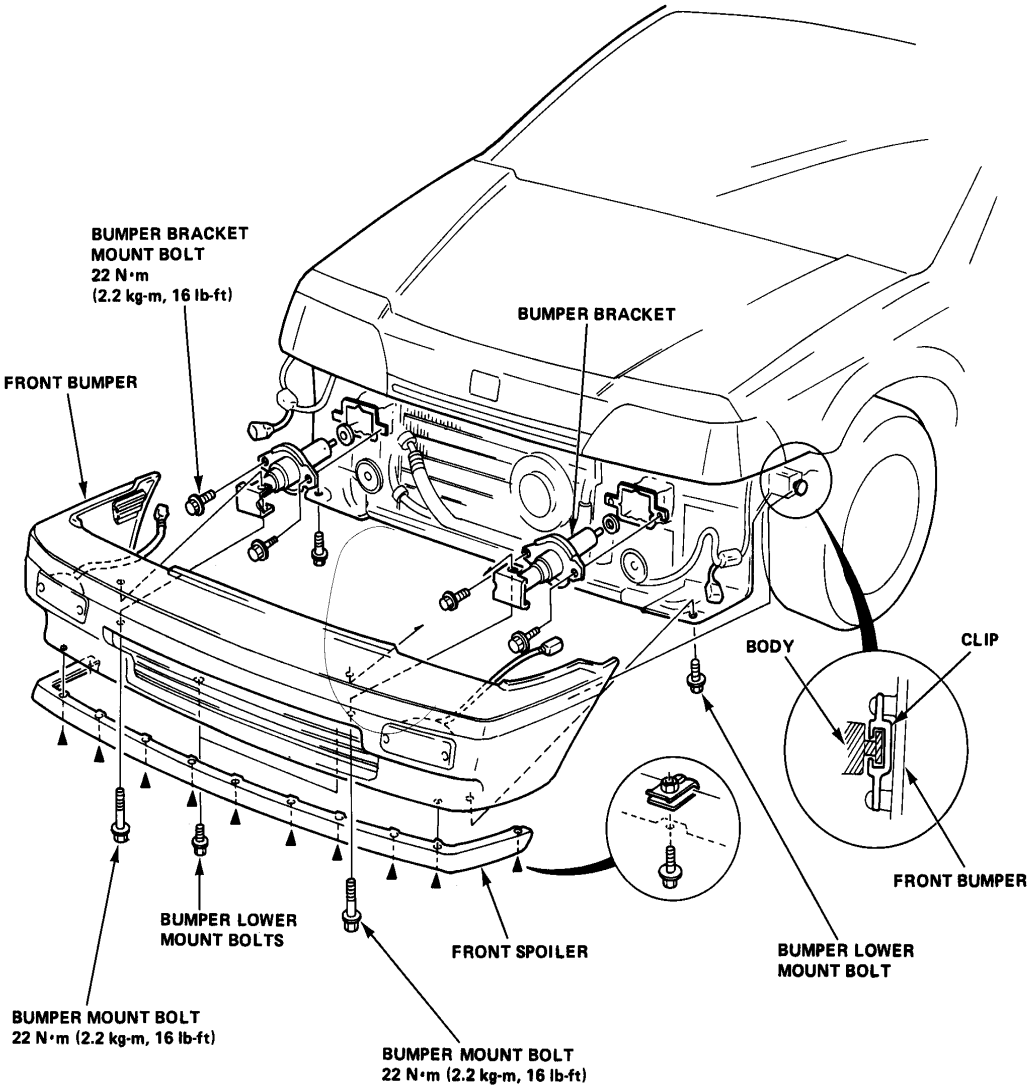

Rear Bumper

Replacement

1. Remove the mud gards. (except Hatchback)
2. Remove the 2 bumper mount bolts (except Wagon) or the 8 bumper mount screws (Wagon).
3. Remove the bumper by sliding it to the rear.
4. Disconnect the license light wire connectors.

Sedan and Hatchback:

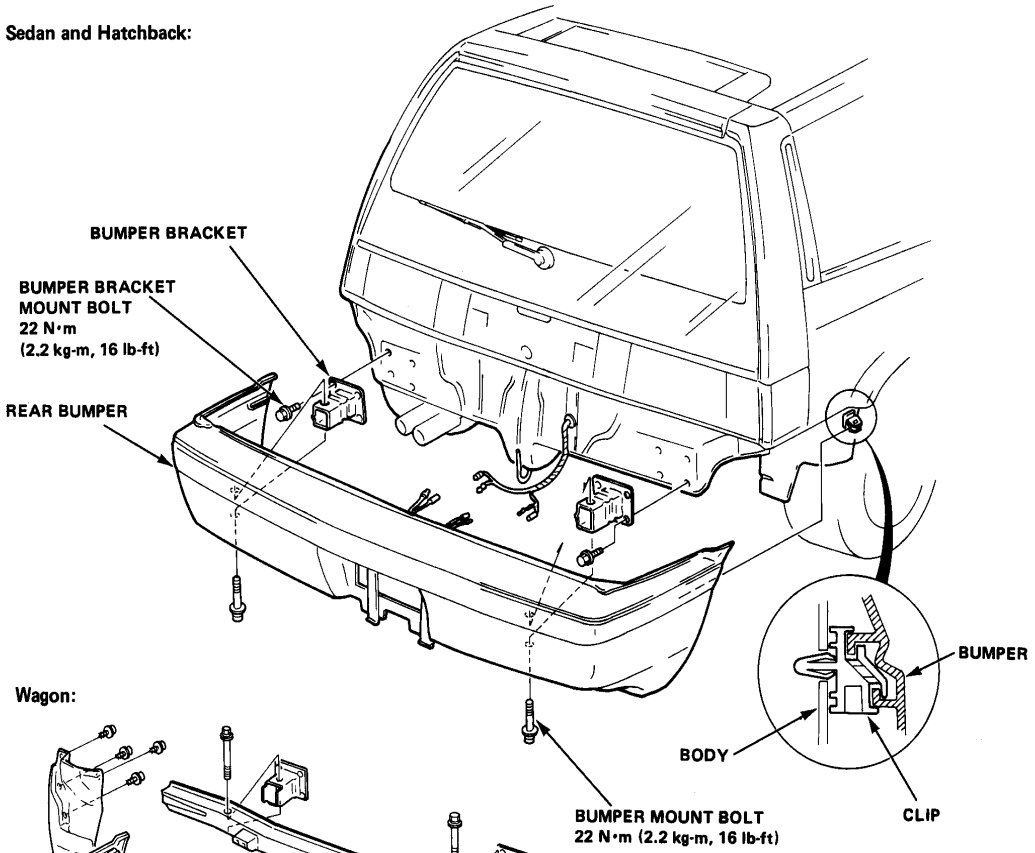

Wagon:

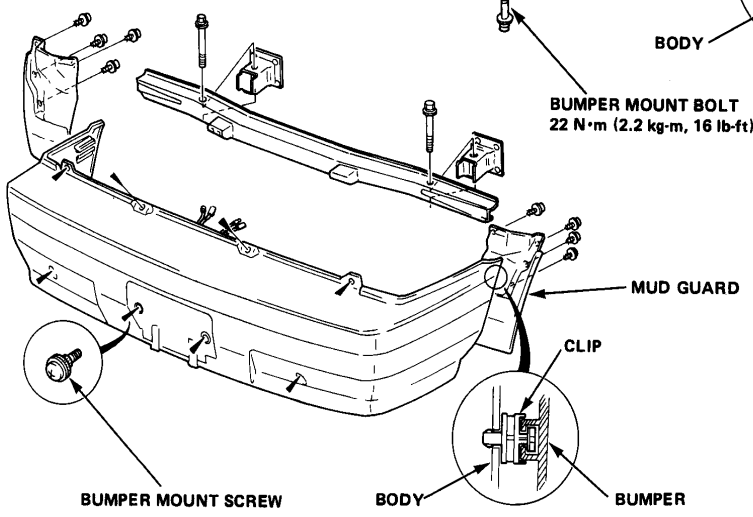

22-74

Hood

Replacement

1. Remove the hood by removing the hood hinge bolts.
2. When installing the hood, don't tighten the hinge bolts until you've checked the adjustments shown below.

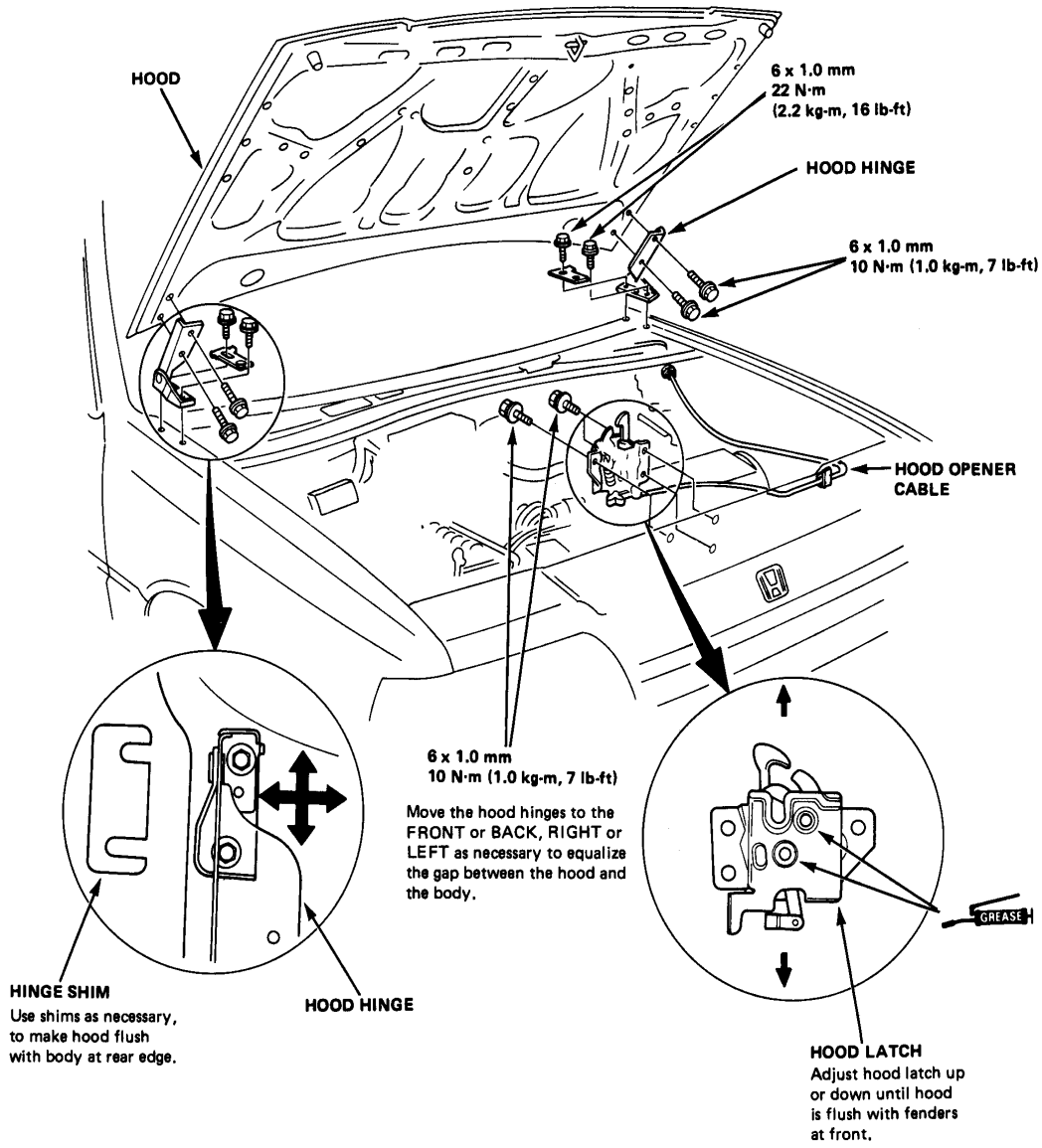

Trunk Lid

Replacement

Sedan:

1. Remove the trunk lid hinge bolts, then lift off the lid.
2. Remove the torsion bar by using a release tool.

   CAUTION: The torsion bars are under spring tension.

3. Remove the rear shelf.
4. Remove the hinge bracket mounting nuts, then remove the hinges from the trunk.
5. Before tightening the hinge bolts, check the adjustments shown below:

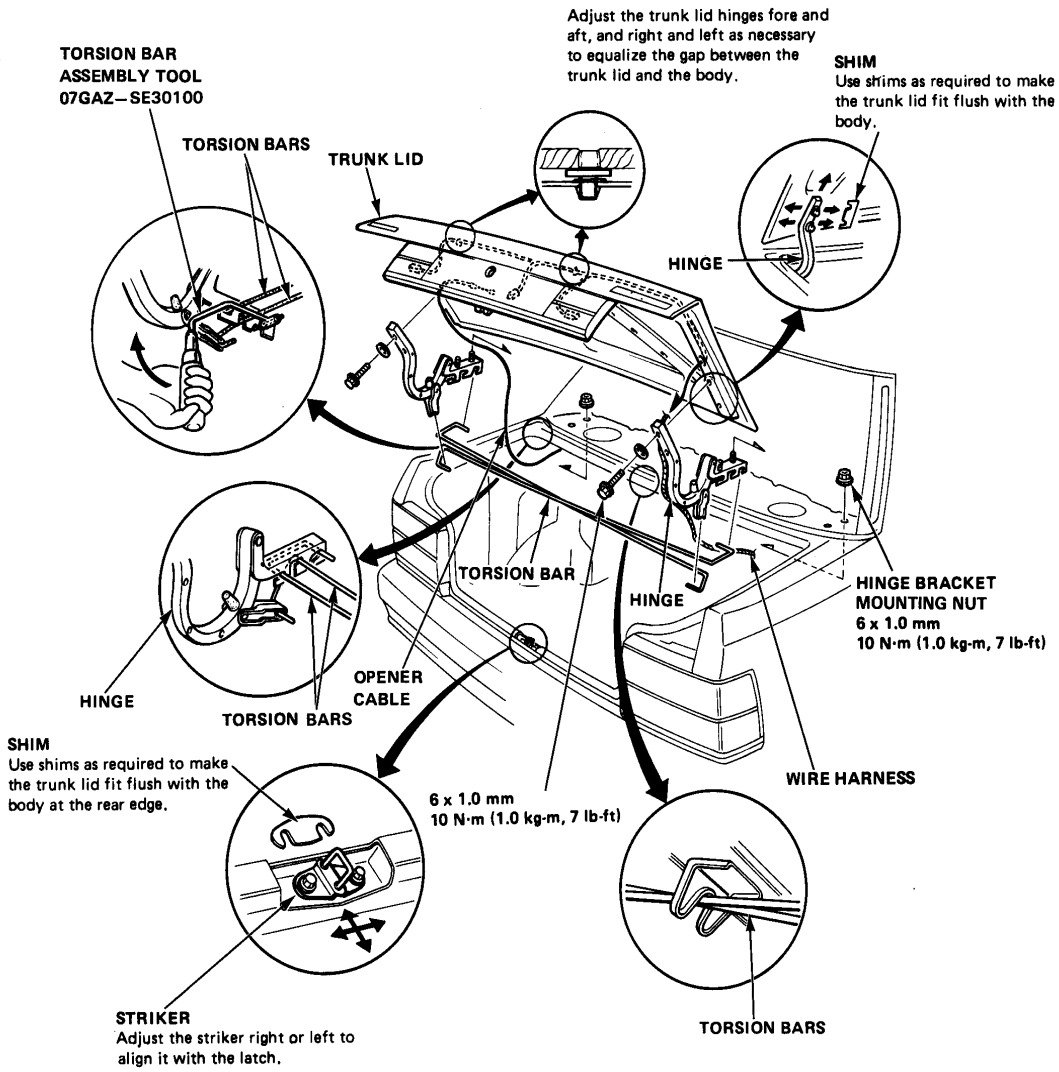

Tailgate

Replacement

Hatchback and Wagon:

1. Remove the tailgate trim panel.
2. Disconnect the washer hose.
3. Pull the harness out of the body as shown.

   NOTE: Before pulling out the wire harness, tie a string to the end of it so you can pull it back in when the tailgate is reinstalled.
4. Hold the tailgate up and remove the nuts from both support strut mounts.
5. Remove the tailgate mounting bolts and remove the tailgate.

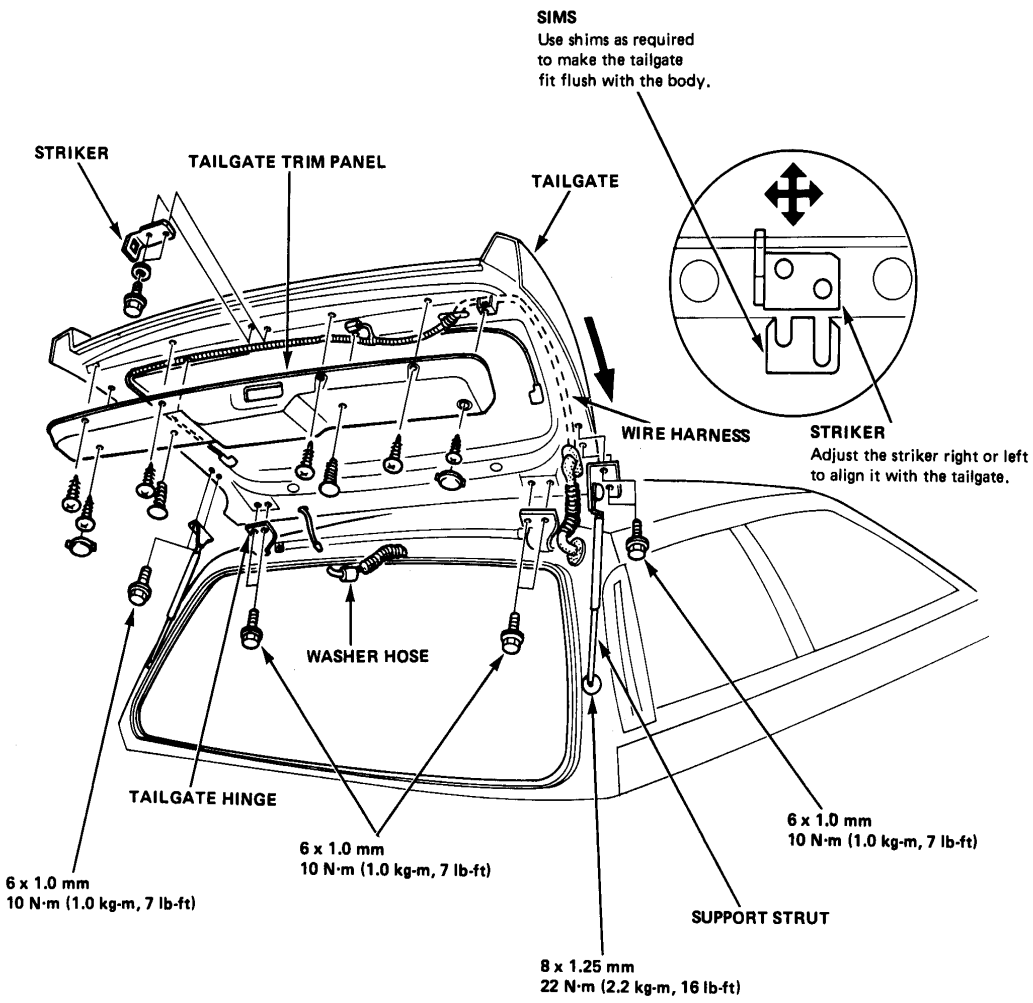

Opener and Latch

Replacement

Disassemble in numbered sequence.

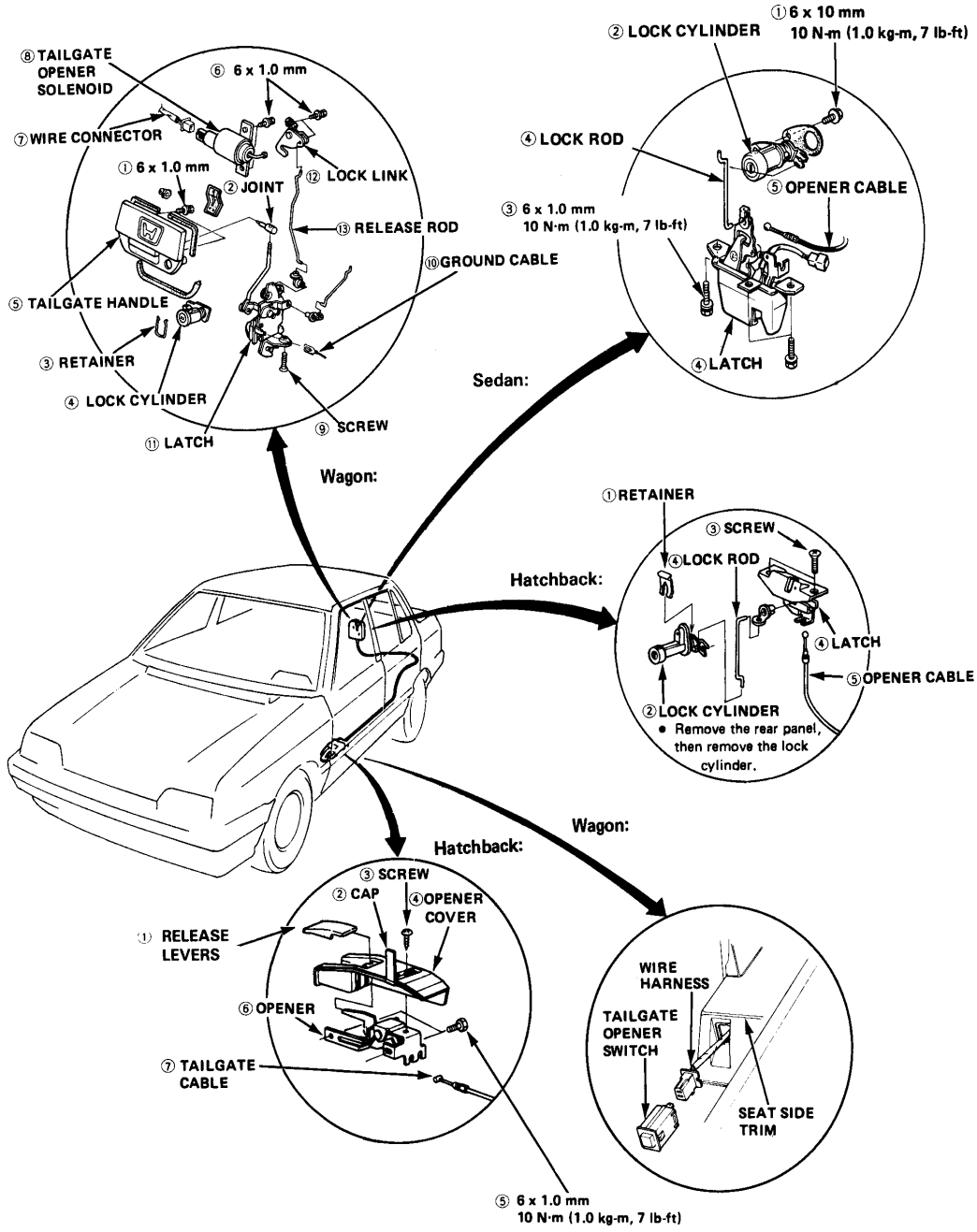

Frame Repair Chart

Sedan

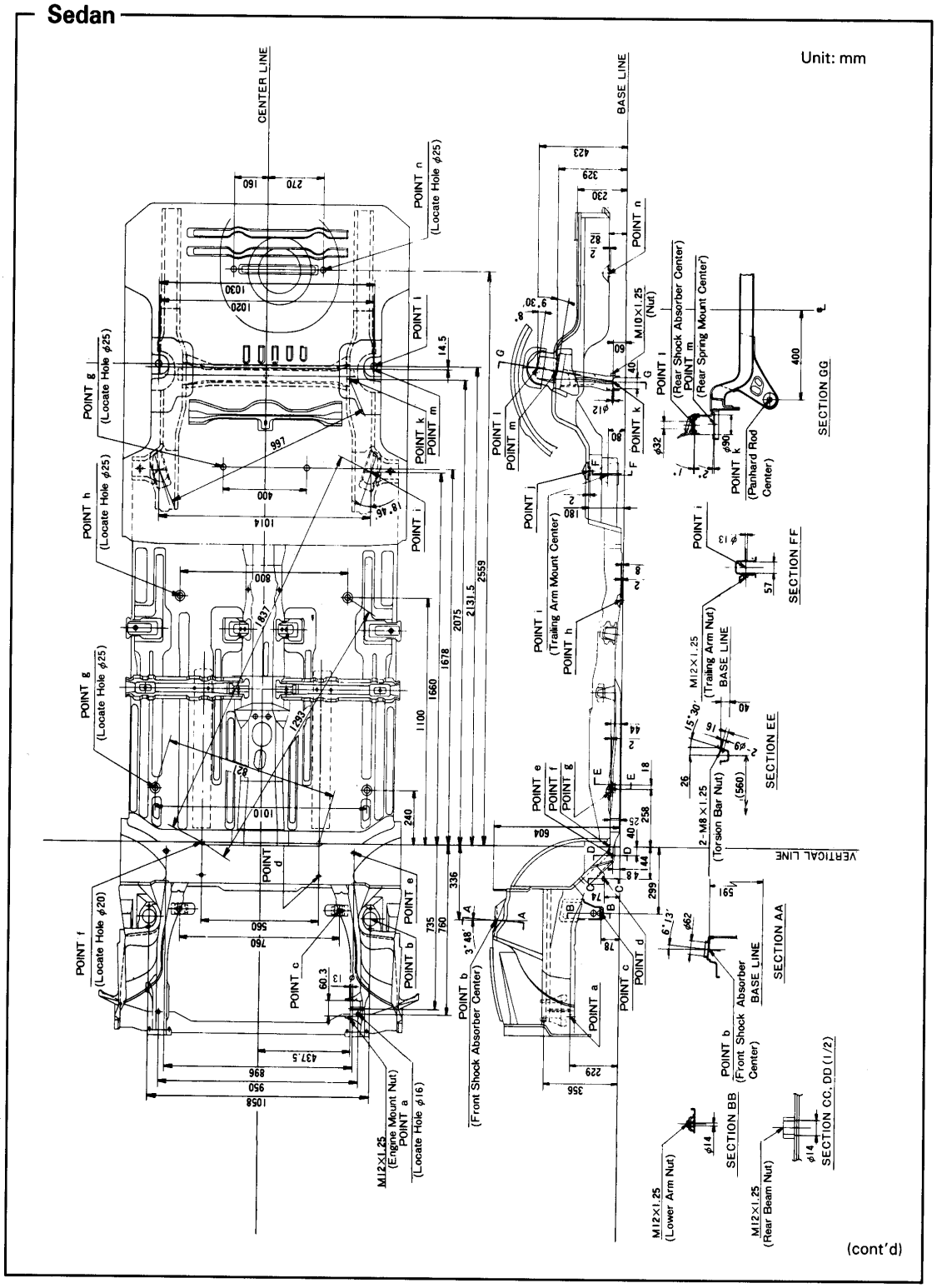

(cont'd)

Frame Repair (cont'd)

Hatchback

Unit: mm

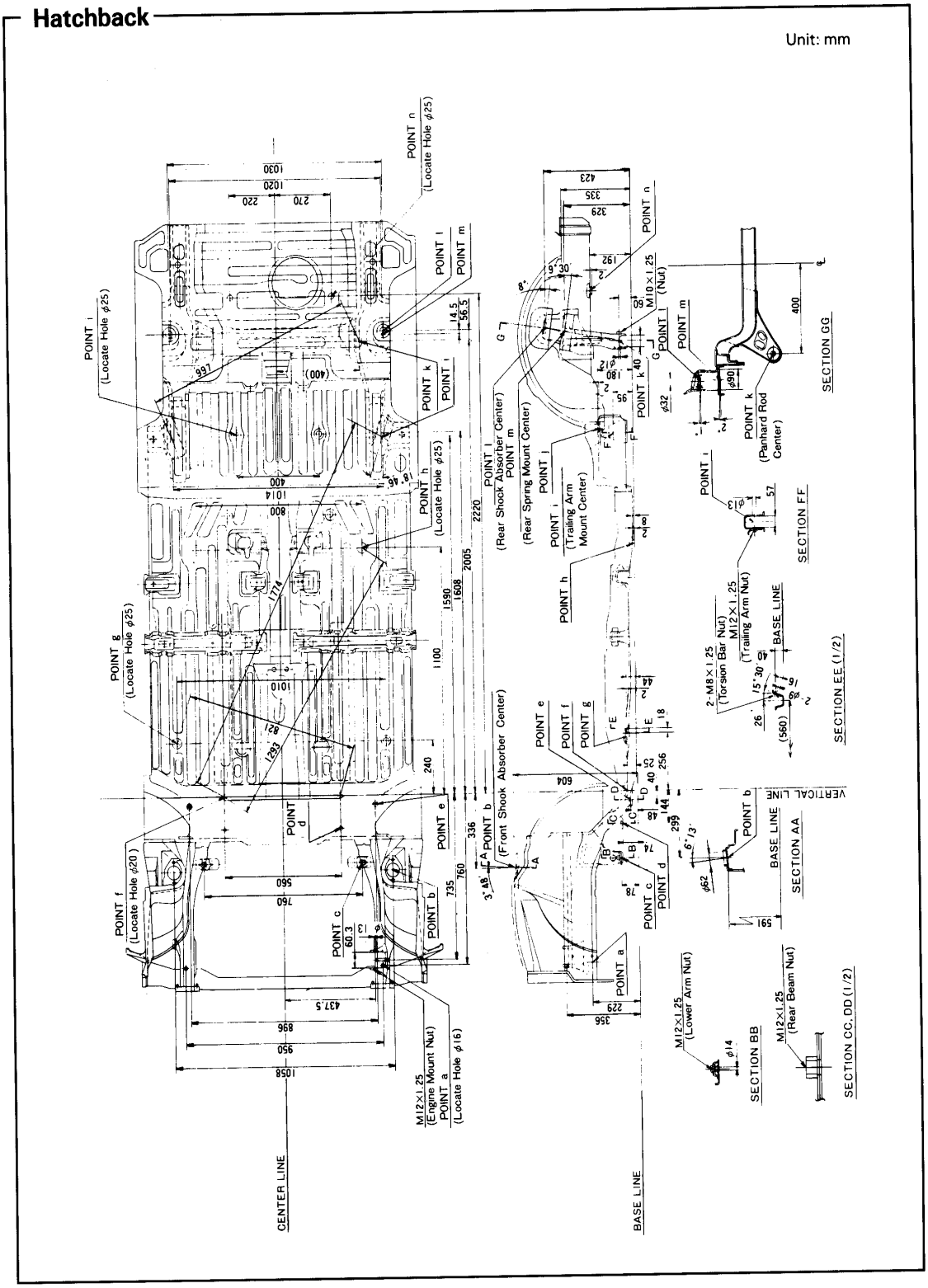

Wagon

Unit: mm

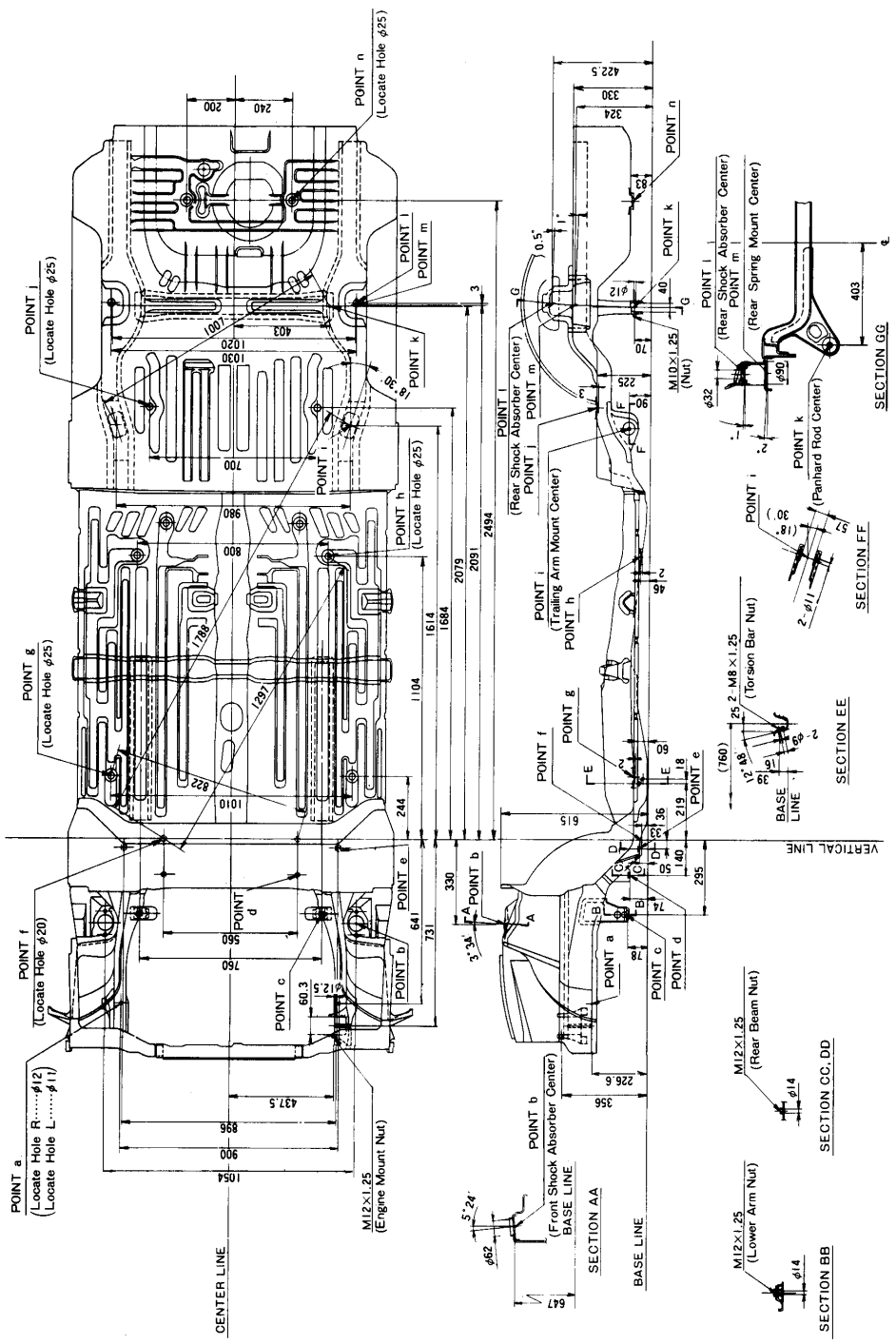

(cont'd)

Frame Repair Chart (cont'd)

Wagon 4WD

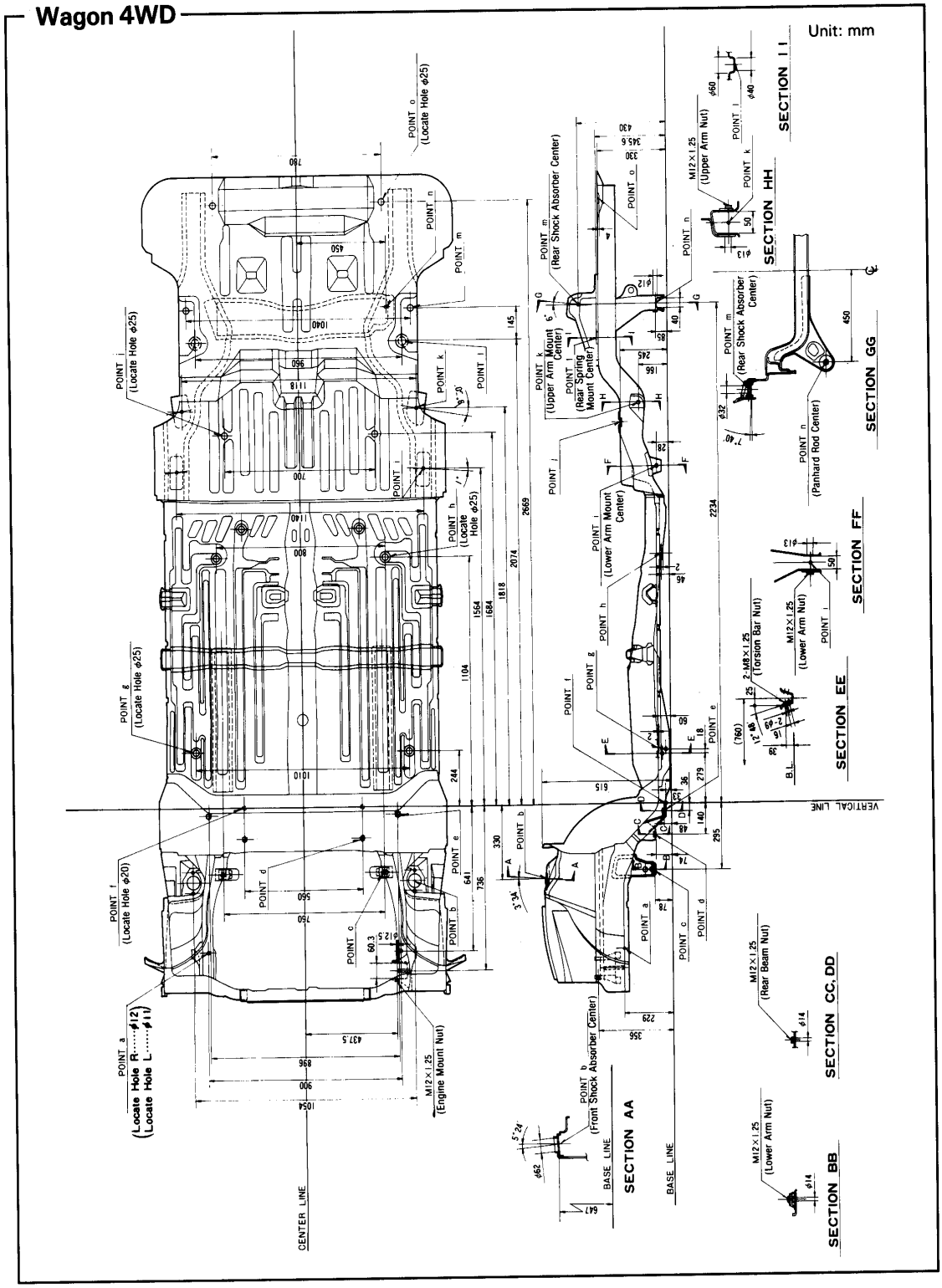

Heater

Heater

Illustrated Index

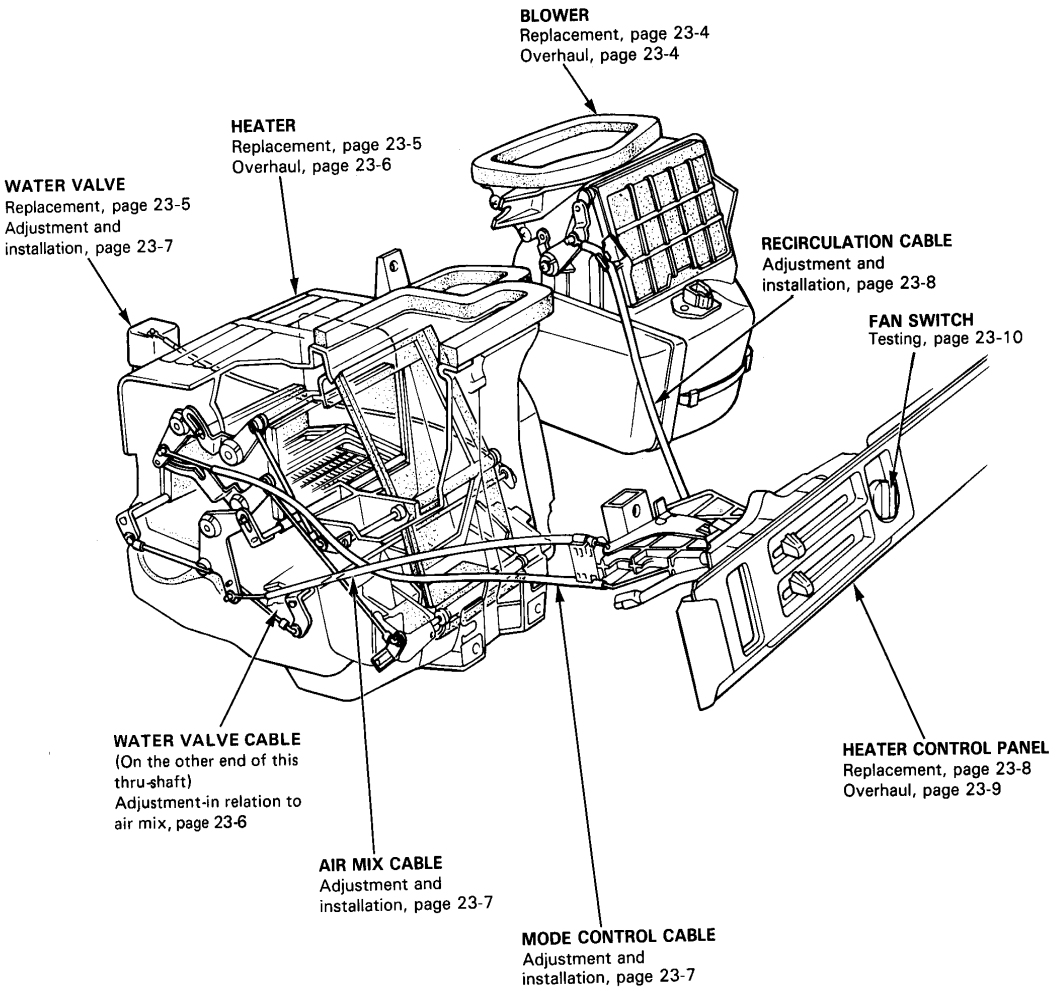

Troubleshooting

1. Insufficient heating
   - Duct clogged or disconnected
   - Broken air outlet
   - Clogged water valve
   - Water valve control cable misadjusted or disconnected
   - Air mix control cable misadjusted or disconnected
   - Clogged heater core
   - Clogged heater hose

2. Abnormal air flow
   - Binding linkage
   - Mode control cable misadjusted or disconnected

3. Recirculation door malfunction
   - Recirculation cable misadjusted or disconnected

Blower

Replacement

1. Remove the glove box (hatchback or sedan) or passenger's tray (station wagon).
2. Remove the glove box frame (hatchback or sedan).
3. Remove the air duct.

   NOTE: Cars with air conditioner have no duct; remove the A/C evaporator.
4. Disconnect the wire harness from the blower.
5. Remove the three mounting bolts and remove the blower.

Install the blower in the reverse order of removal and make sure that there is no air leakage at mating surface between the blower and the duct (or evaporator).

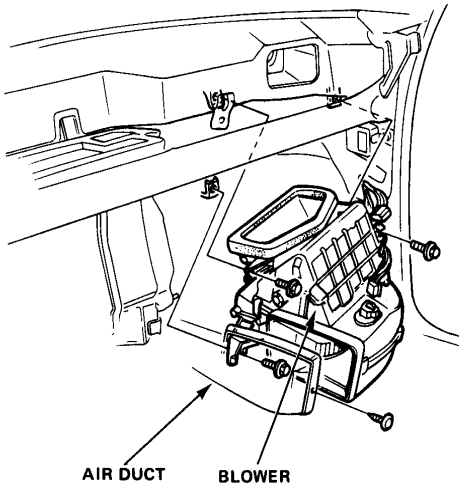

Overhaul

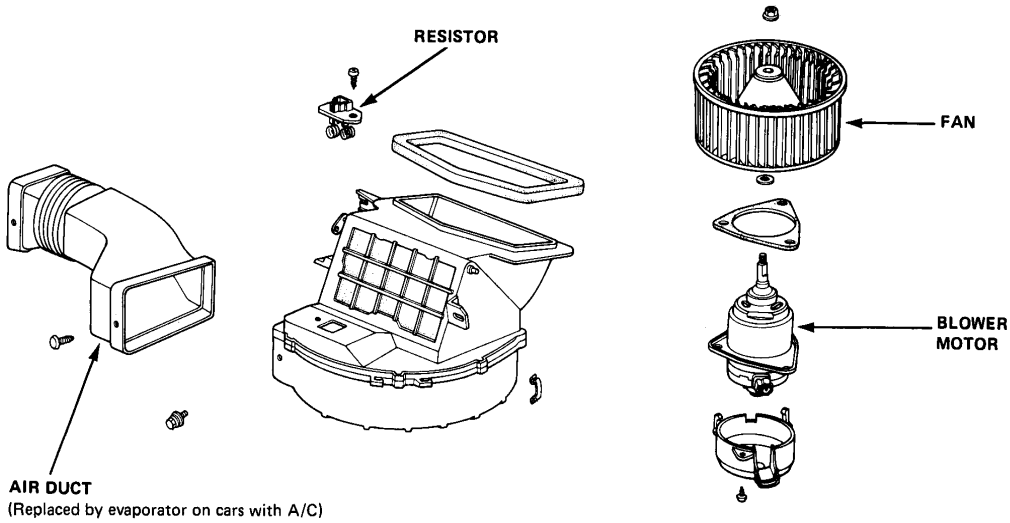

Heater Assembly

Replacement

1. Drain coolant at the radiator.
2. Disconnect the heater hoses at the firewall.

   NOTE: Coolant will run out when the hoses are disconnected, drain it into a clean drip pan.
3. Remove the water valve cover from the water valve.
4. Disconnect the water valve cable from the water valve.
5. Remove the heater lower mounting nut.

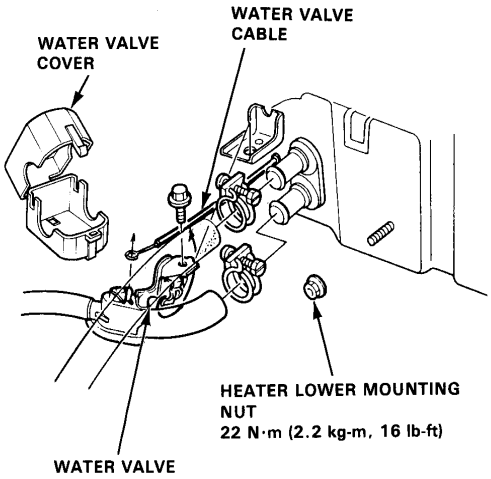

6. Remove the dashboard. (see Section 22).
7. Remove the two heater mounting bolts, then pull the heater away from the body and remove it.

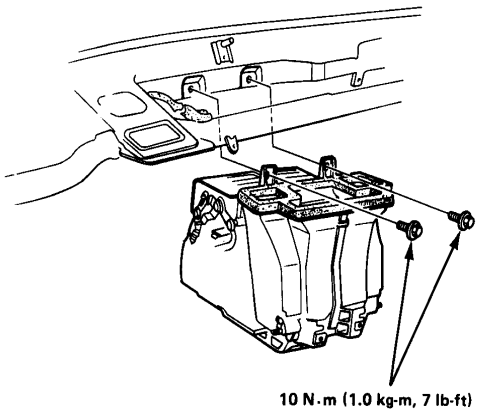

Install in reverse order of removal, and:
- Apply a sealant to the grommets.
- Do not interchange the inlet and outlet hoses.
- Make sure that hose clamps are secure.
- Loosen the bleed bolt on the engine and refill the radiator and reservoir tank with the proper coolant mixture.
  Tighten the bleed bolt when all trapped air has escaped and coolant begins to flow from it.
- Connect all cables so they are properly adjusted (see page 23-7).
- Install the water valve cover with "UP" mark toward up.

Heater Assembly

Overhaul

NOTE: It is not possible to remove the heater core without first removing the heater assembly. Therefore, the following procedure is necessary for both heater unit replacement and heater core overhaul.

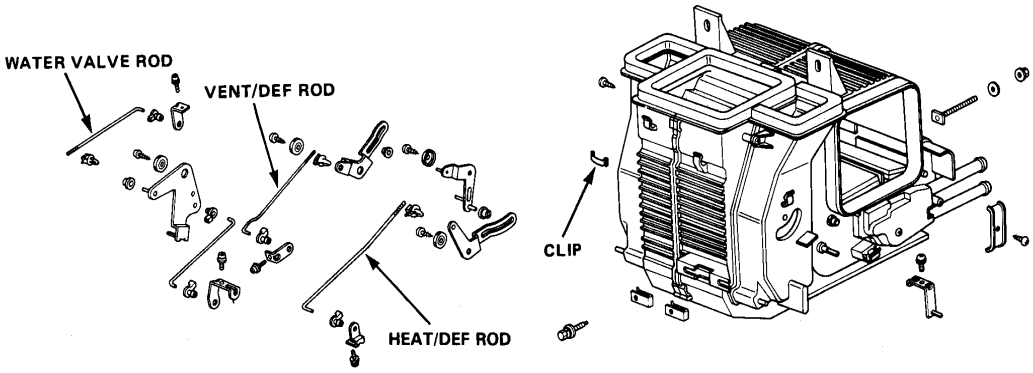

To adjust the doors,

1. Set the function control arm to the DEF position.
2. Set the doors to the DEF position.
3. Snap the rods into the clips.
4. Move the function control arm to the VENT position to be certain that the doors operate smoothly.

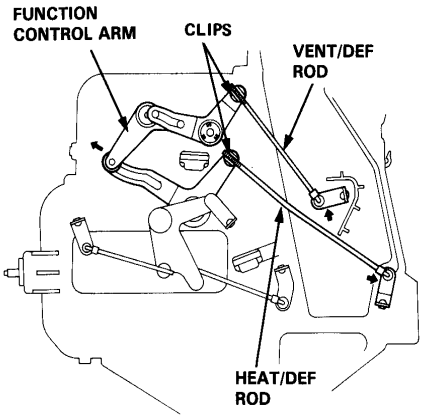

To adjust the water valve/air mix rods

1. Set the air mix control arm to the COLD position.
2. Move the air mix rod to the COLD position.
3. Snap the rod into the clip.

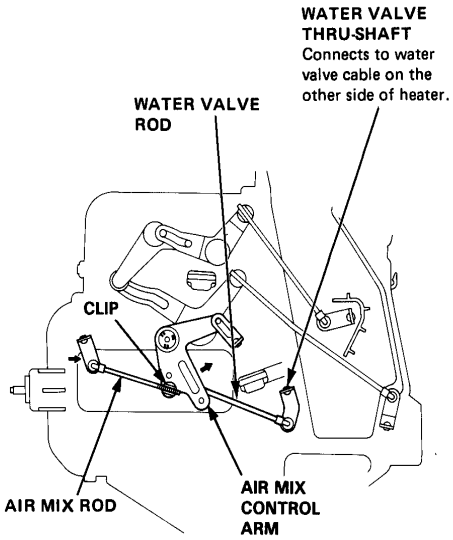

Heater Control Cables

Adjustment and Installation

Air Mix Cable

1. Slide the temperature control lever to COLD.
2. Close the air mix door, then connect the end of the cable to the arm and snap the cable housing into the clamp.

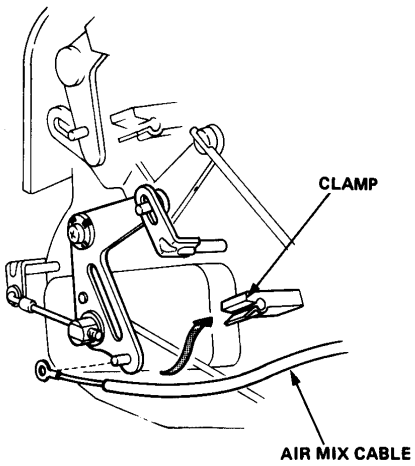

3. While looking through the heater duct opening, slide the temperature lever to HOT and make sure the air mix doors open fully, then slide the lever back to COLD.
   Make sure they close fully.

Mode Control Cable

1. Slide the function control lever to the DEF position.
2. Move the mode control arm to the DEF position.
3. Connect the cable end to the function control arm, then snap the cable housing into the clamp.

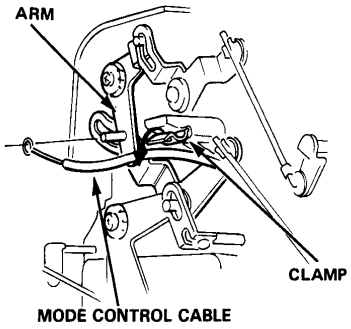

4. Move the function control lever to the VENT position and check that the linkage operates smoothly.

Water Valve Cable (Right side of heater)

NOTE: When adjusting the water valve cable, first remove the water valve case, see page 23-5.

1. Extend the end of the cable housing 5 mm (1/5 in) from the end of the clamp boss and snap the housing into the clamp.
2. Connect the cable end to the arm on the water valve thru-shaft.

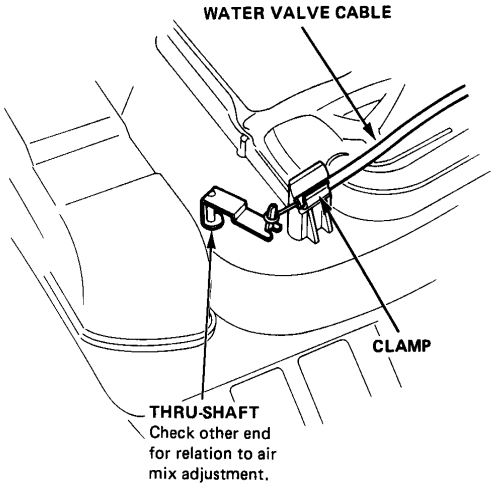

3. Slide the temperature control lever to COLD. Close the water valve fully, then connect the water valve cable end to the valve arm, and snap the cable housing into the clamp as shown.
4. Install the water valve cover with "UP" mark toward up.

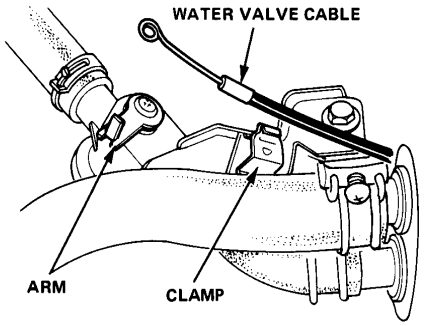

(cont'd)

Heater Control Cables

Adjustment and Installation (cont'd)

Recirculation Cable

1. Slide the recirculation lever to the FRESH position.
2. Open the recirculation door.
3. Connect the recirculation cable to the recirculation arm and snap the cable housing into the clamp.

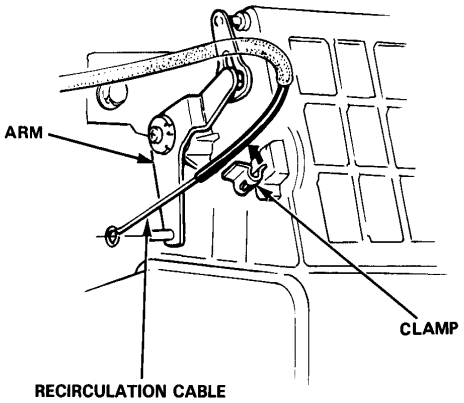

4. Move the recirculation lever to the REC position to be certain that the linkage operates smoothly.

Heater Control Panel

Replacement

1. Disconnect the air mix cable, the mode control cable and the recirculation cable.
2. Remove the heater control knobs and the fan switch knob.
3. Remove the illumination panel.
4. Remove the heater control panel attaching screws, and pull the panel out of the dash.

   NOTE: On the hatchback and sedan, the fan switch can be serviced separately. Remove the ashtray and heat shield. Remove the heater control knob and illumination panel. Then remove the fan switch by removing the nut.

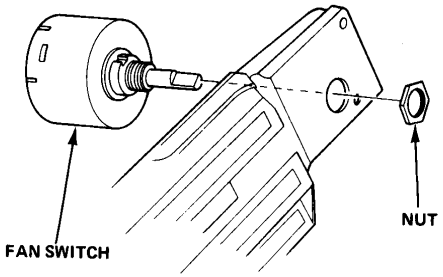

Overhaul

Hatchback and Sedan :

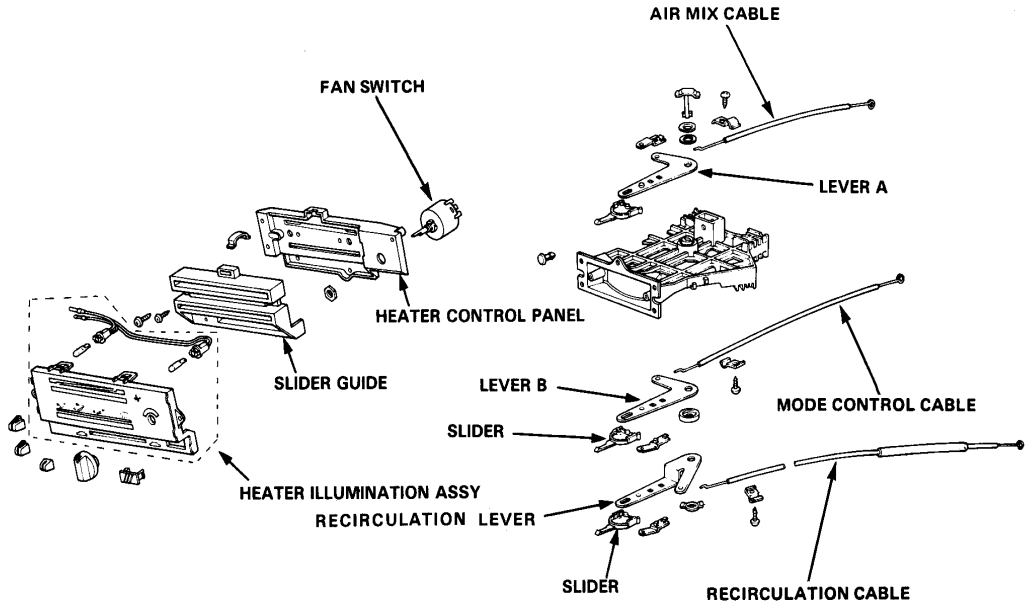

Wagon :

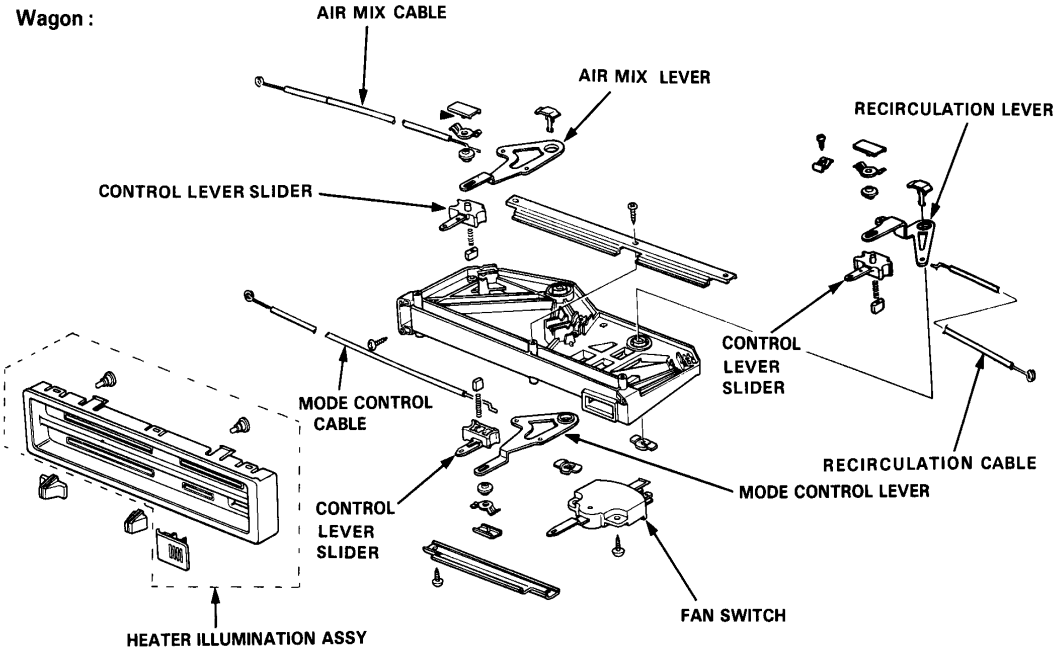

Heater Control Panel

Fan Switch Testing

Check for continuity according to the table.

Position \ Terminal	E	L	M_1	M_2	H	C
OFF						○
I	○	○				○
II	○		○			○
III	○			○		○
MAX	○				○	○

Hatchback and Sedan:

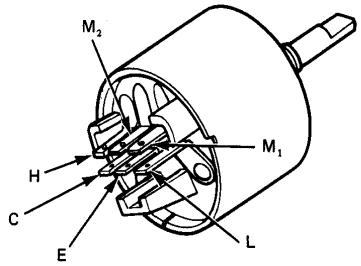

Wagon:

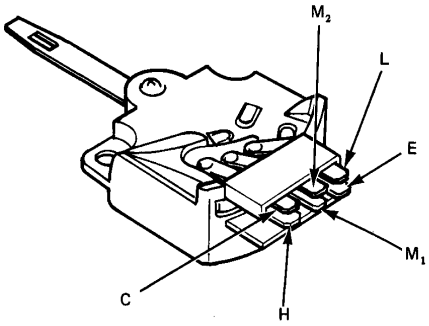

23-10

Air Conditioner

Air Conditioner

Illustrated Index

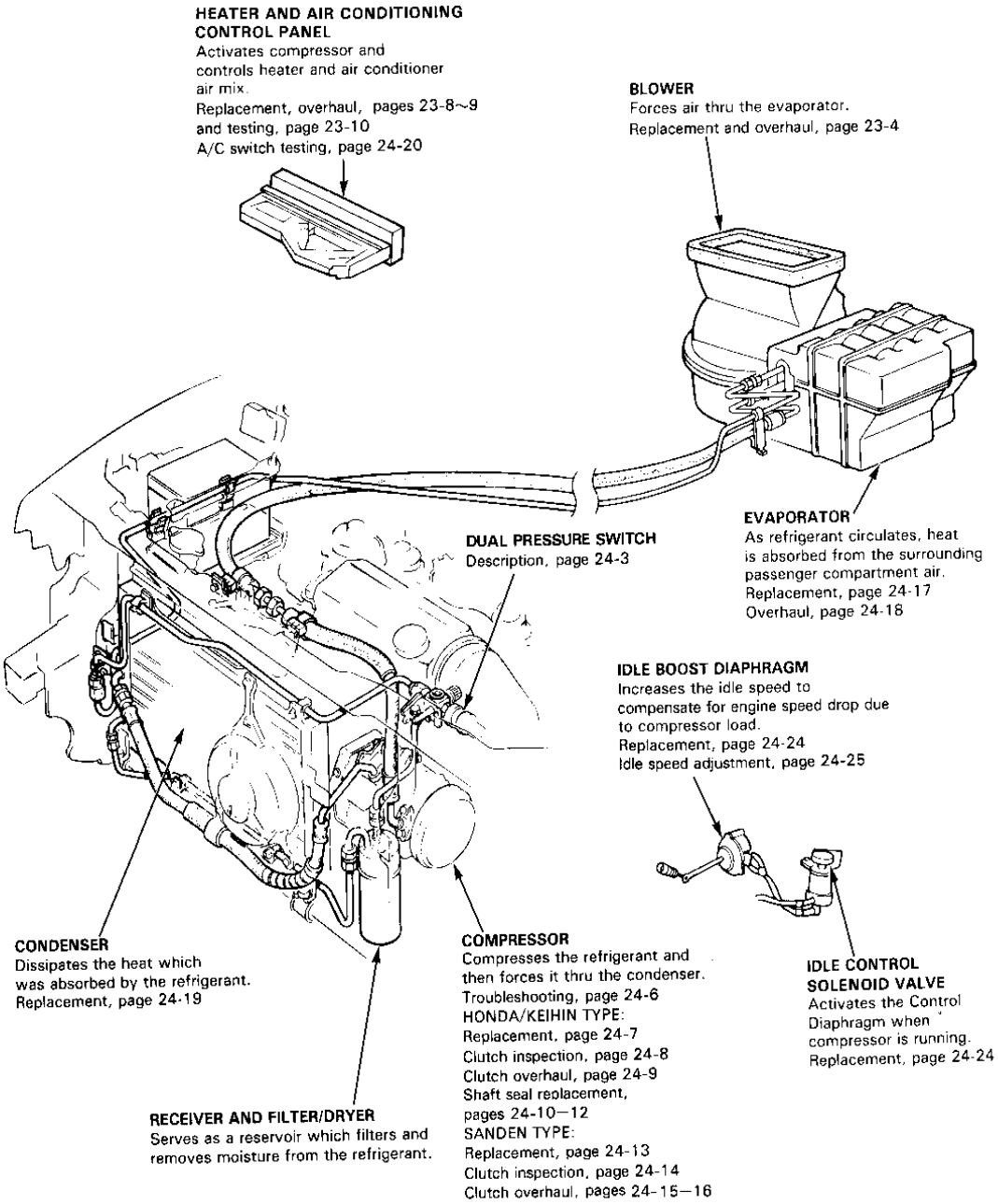

Evaporator

Replacement, page 24-17
Overhaul, page 24-18

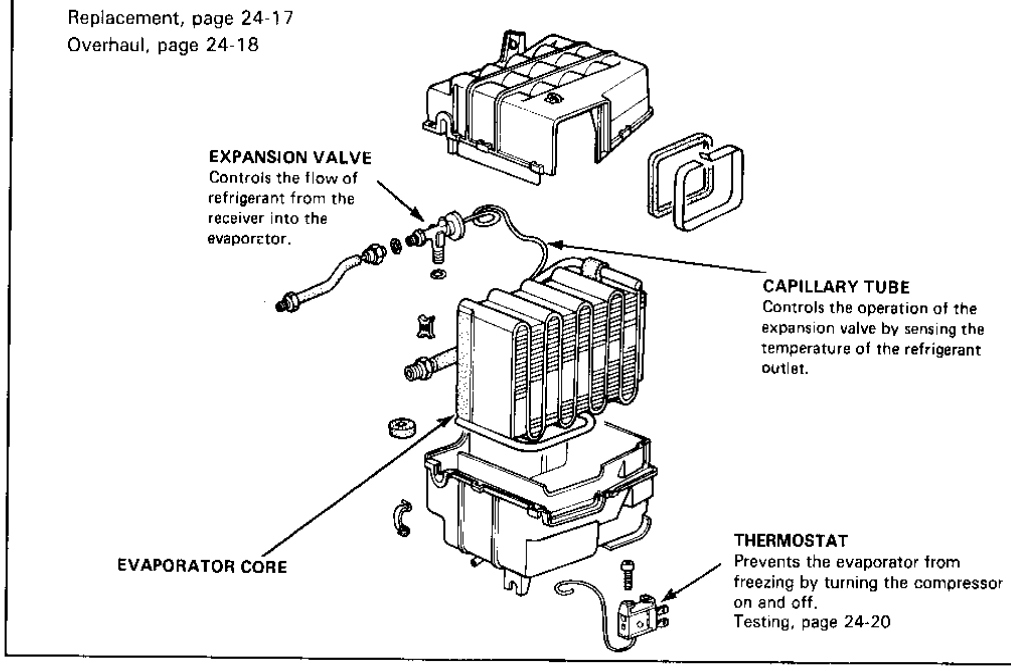

Condenser

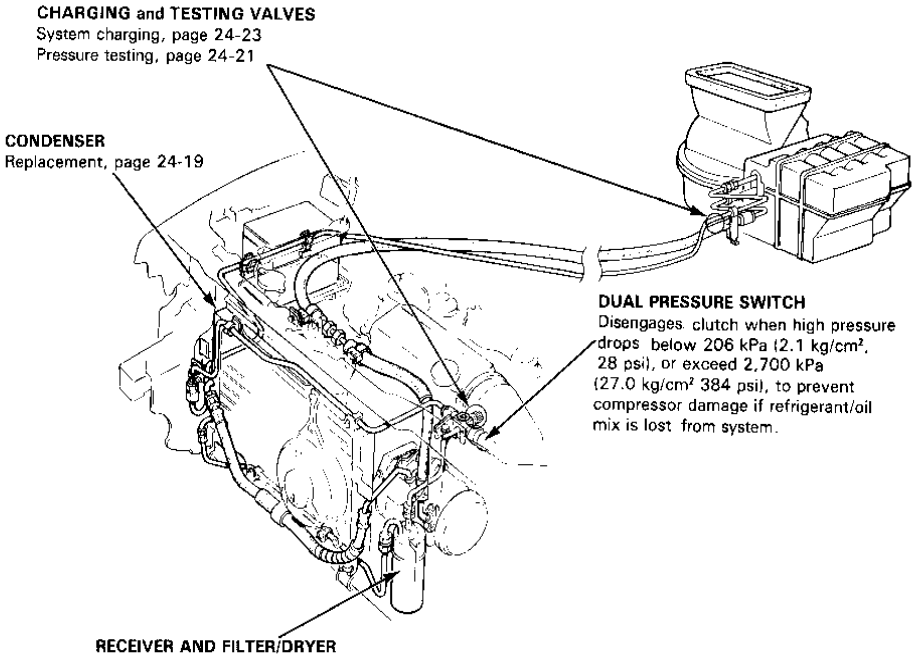

Performance Testing

NOTE: The graph (Inspection Data) below shows humidity between 20% and 80%, divided into intervals of 10%.
Tolerance is ±10% when taking a reading.
This means that if humidity is 40%, 30—50% is the tolerance range.

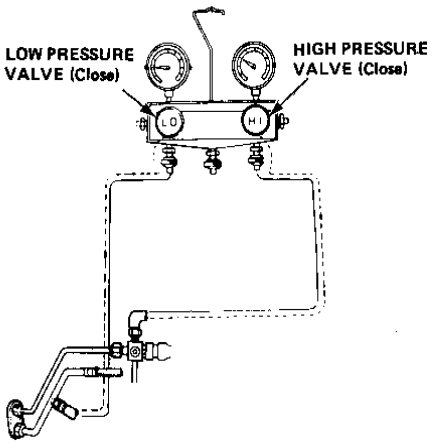

1. Connect gauges as shown.
2. Insert a dry bulb thermometer in the cool air outlet, and place the psychrometer (dry and wet bulb thermometer) close to the inlet of blower. Do not spill wet bulb water.
3. Test conditions:
   - Avoid direct sunlight.
   - Open engine hood.
   - Open front doors and windows.
   - Set the temperature control lever to COLD (left end). Set the mode control to VENT. Set the recirculation control to REC.
   - Turn the fan switch to HI (right end).
   - Turn the A/C switch on.
   - Run the engine at 1,500 rpm.
   - No driver and passengers in car.
4. After running the system for about 10 minutes under the above conditions, read the thermometer and pressure valve.
5. The performance of the system is satisfactory if the measurements are within the range bands shown on the Performance Chart.

Examples

Measurements.
Intake temperature (Wet bulb):
78°F (25.5°C)
Intake temperature (Dry bulb):
86°F (30°C) 70% humidity
Delivery temperature:
62.6°F (17°C)
Delivery pressure:
2250 kPa (326 lbs/in²)
Intake pressure:
250 kPa (36.2 lbs/in²)

Proper intake/delivery pressure, and temperature ranges are shown on the chart at right.
Find your intake temperature across the bottom, and the relative intake and delivery pressures up the side:
Lines drawn at right angles to your readings should cross within the appropriate pressure and humidity range bands on the graph.

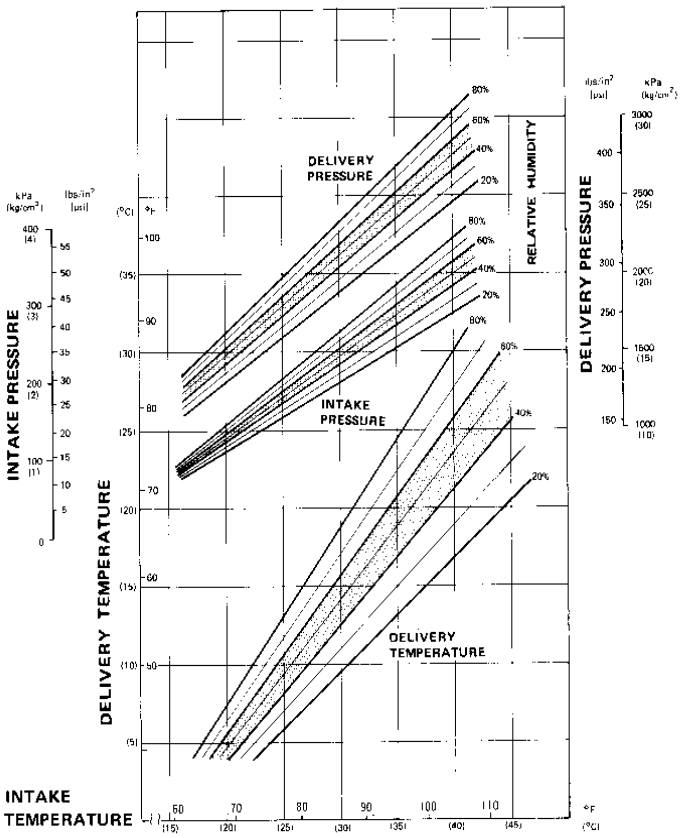

24-4

Service Tips

WARNING **When handling refrigerant (R-12):**

- **Always wear eye protection.**
- **Do not let refrigerant get on your skin or in your eyes. If it does:**
  - **Do not rub your eyes or skin.**
  - **Splash large quantities of cool water in your eyes or on your skin.**
  - **Rush to a physician or hospital for immediate treatment. Do not attempt to treat it yourself.**
- **Keep refrigerant containers (cans of R-12) stored below 40°C (100°F).**
- **Do not handle or discharge refrigerant in an enclosed area near an open flame: it may ignite and produce a poisonous gas.**

1. Always disconnect the negative cable from the battery whenever replacing air conditioner parts.

2. Keep moisture and dust out of the system. When disconnecting any lines, plug or cap the fittings immediately; don't remove the caps or plugs until just before the lines are reconnected.

3. Before connecting any hose or line, apply a few drops of refrigerant oil to the seat of the O-ring or flare nut.

4. When tightening or loosening a fitting, use a second wrench to support the matching fitting.

5. When discharging the system, don't let refrigerant escape too fast; it will draw the compressor oil out of the system.

6. If you replace the following parts, add refrigerant oil to the new part in the amount listed.

   Condenser ..... **10 cm³ (cc) (1/3 fl oz)**
   Evaporator ..... **30 cm³ (cc) (1 fl oz)**
   Line or hose ..... **10 cm³ (cc) (1/3 fl oz)**
   Receiver ..... **10 cm³ (cc) (1/3 fl oz)**

   NOTE: If you replace the compressor, drain 30cm³ (cc) (1fl oz)of refrigerant oil from the new compressor (thru the suction fitting). If you are also replacing any of the above parts, reduce the amount of oil you drain from the new compressor by the amount listed for these parts.

7. Tighten nuts to the following torque:

Line or hose dia. mm (in)	Torque N·m (kg-m, lb-ft)	Application
9.53 (3/8)	17 (1.7, 12)	•Sight glass •Condenser •Receiver •Receiver pipe
12.7 (1/2)	22 (2.2, 16)	•Discharge hose (Condenser side)
15.88 (5/8)	32 (3.2, 23)	•Suction hose (Evaporator side)
8 x 1.25 bolt	30 (3.0, 21)	•Suction hose (Compressor side) •Discharg hose (Compressor side)

Troubleshooting

TEST RESULTS	RELATED SYMPTOMS	PROBABLE CAUSE	REMEDY
Discharge (high) pressure abnormally high (Test on page 24-21)	After stopping compressor, pressure drops to about 196 kPa (2 kg/cm², 28 psi) quickly, and then falls gradually.	Air in system.	Evacuate system; then recharge. Evacuation: page 24-22 Recharging: page 24-23
	Pressure does not return to normal when condenser is cooled by water.	Excessive refrigerant in system.	Discharge refrigerant as required.
	Reduced air flow through condenser.	• Clogged condenser or radiator fins. • Original and air conditioner fans not working properly.	• Clean. • Check voltage and fan rpm.
	Line to condenser is excessively hot.	Restricted flow of refrigerant in system.	Repair.
Discharge pressure abnormally low (Test on page 24-21)	Excessive bubbles in sight glass; condenser is not hot.	Insufficient refrigerant in system.	• Charge system. • Check for leaks.
	High and low pressures are balanced soon after stopping compressor.	• Faulty compressor discharge or inlet valve. • Faulty compressor seal.	Replace compressor. Repair.
	Outlet of expansion valve is not frosted; low pressure gauge indicates vacuum.	• Leaking thermostat. • Frozen expansion valve. • Faulty expansion valve.	Repair or replace.
Suction (low) pressure abnormally low (Test on page 24-21)	Excessive bubbles in sight glass; condenser is not heated.	Insufficient refrigerant.	Check for leaks. Charge as required.
	Expansion valve is not frosted and low pressure line is not cooled. Low pressure gauge indicates vacuum.	• Leaking thermostat. • Frozen expansion valve. • Faulty expansion valve.	Replace expansion valve.
	Outlet temperature is low; no air flow.	Frozen evaporator.	Run the fan with compressor off.
	Expansion valve frosted	Clogged expansion valve.	Clean or replace
	Low pressure hose is cooler than expansion valve outlet and evaporator.	Collapsed or restricted low pressure hose.	Clean, repair or replace.
Suction (low) pressure abnormally high (Test on page 24-21)	Low pressure hose and check joint are cooler than around evaporator.	• Expansion valve open too long. • Loose thermostat (poor contact).	Repair or replace.
	Suction pressure is lowered when condenser is cooled by water (High pressure side also heated.)	Excessive refrigerant in system.	Discharge refrigerant as necessary.
	High and low pressures are balanced too early when compressor is stopped.	• Faulty gasket. • Faulty high pressure valve. • Foreign particle stuck in high pressure valve.	Replace compressor.

Compressor

Replacement (HONDA/KEIHIN TYPE)

1. Run the engine at idle speed and turn on the air conditioner for a few minutes.
2. Shut the engine off, and disconnect the battery negative terminal.
3. Disconnect the compressor clutch lead.
4. Remove the left front under cover and the engine lower grille cowling.
5. Discharge the refrigerant very slowly from the system(page 24-21).
6. Remove the receiver by disconnecting lines.

   CAUTION: Cap the open fittings immediately to keep moisture and dirt out of the system.

7. Disconnect the discharge hose and suction hose from compressor.

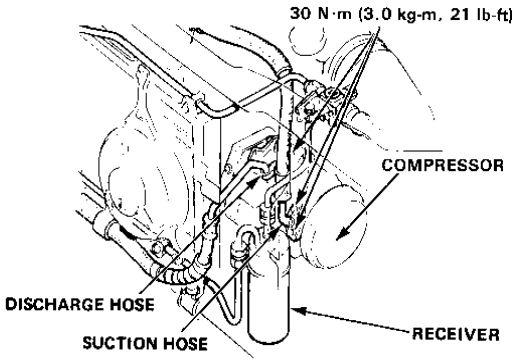

8. Loosen the belt adjusting bolt and pulley nut then lift the belt off the pulley.
9. Remove the nut and compressor mounting bolts.

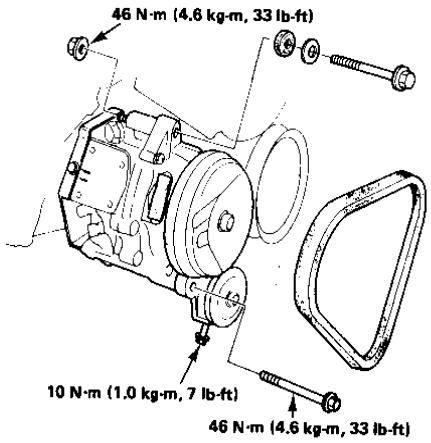

10. Remove the pulley bracket and remove the compressor from between the radiator and engine.

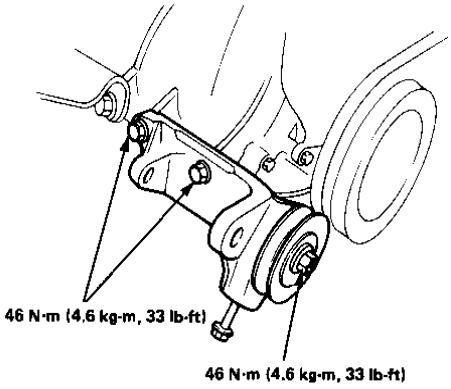

Install the compressor in the reverse order of removal, and:

- If a new compressor is installed, drain 30 cm^3 (cc) (1 fl oz.) of refrigerant oil through the suction fitting on the compressor.
- Adjust the belt.
  Belt tension: 7—9 mm (9/32—11/32 in) deflection when 98N (10 kg, 22 lbs) force is applied between pulleys.
- Charge the system (page 24-23).
- Test the performance (page 24-4).

CAUTION: Do not loosen the cylinder cover bolts on the compressor.

Compressor

Clutch Inspection (HONDA/KEIHIN TYPE)

- Check pulley bearing play and drag by rotating the pulley by hand. Replace the pulley with a new one if it is noisy or has excessive play and drag.

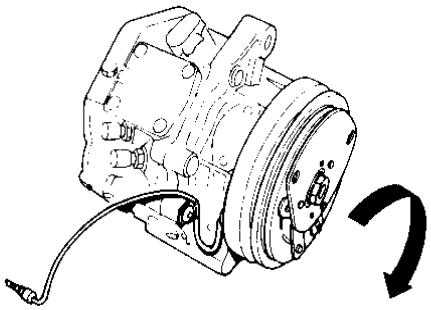

- Check the resistance of coil.

Coil Resistance:
3.0 ± 0.3Ω at 20°C (68°F)

If the resistance is not within specifications, replace the clutch coil with a new one.

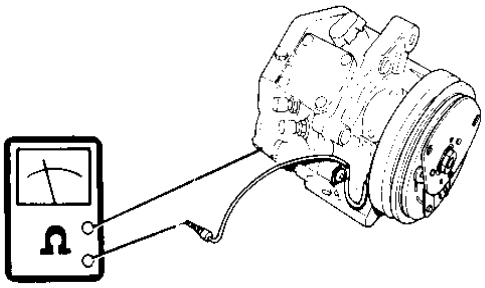

- Measure the clearance between the pulley and pressure plate all the way around. If the clearance is not within specified limits, the pressure plate must be removed and shims added or removed as required.

NOTE: You may use Pulley Holder 07923-PB80001, hold the pressure plate.

Pulley-to-Pressure Plate Clearance:
0.3–0.6 mm (0.012–0.024 in)

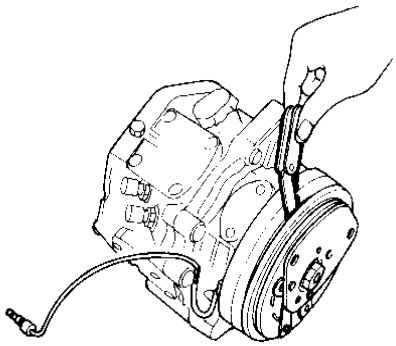

NOTE: The shims are available in six sizes: 0.1 mm, 1.0 mm, 1.25 mm, 1.5 mm, 1.75 mm and 2.0 mm of thickness. 0.1 mm shim is used for minor adjustment.

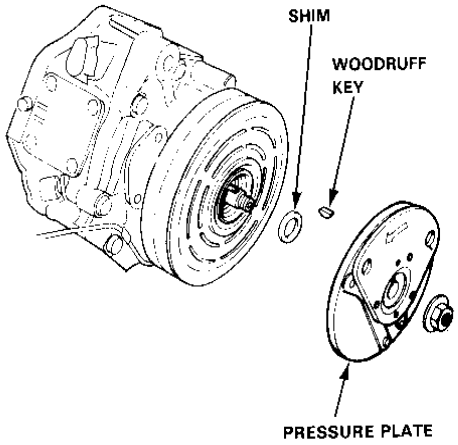

Clutch Overhaul (HONDA/KEIHIN TYPE)

1. Remove the nut while holding the pressure plate with the tool shown.

   CAUTION: Be careful not to compress the spring excessively.
   Use the tool to hold the pressure plate.

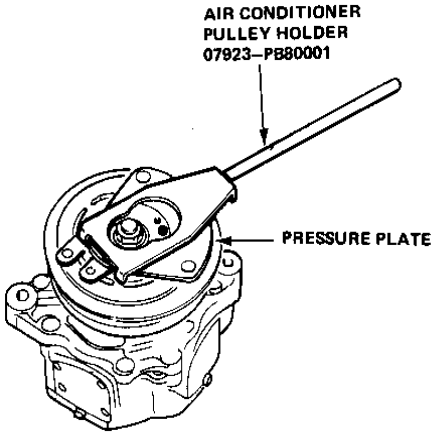

2. Install the clutch remover tool and two 6 mm bolts on the pressure plate, then remove the clutch by screwing the center bolt.

   CAUTION: Use only the special tool to remove the pressure plate. If it is not used clutch damage may result.

   NOTE: Tighten the 6 mm bolts equally, so the tool is installed parallel to the pressure plate.

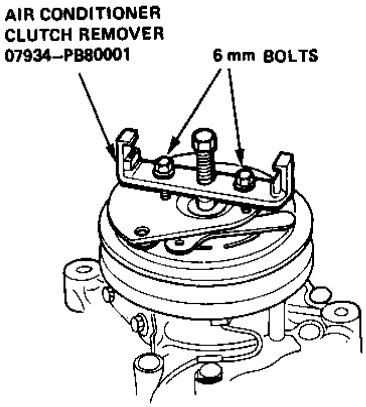

3. Use snap ring pliers to take off the snap ring, then remove the pulley from the shaft with a 2 or 3 jaw puller.

   CAUTION: When removing the snap ring, be careful not to damage the aluminum compressor snout.

4. Unscrew the clutch coil mounting bolt with a TORX DRIVER BIT, 07703-0010200 (Not sold by American Honda; available from other U. S. source.). Then remove the clutch coil.

   NOTE: It's not necessary to remove the clutch wire clamp; just pry it up enough to remove the wire.

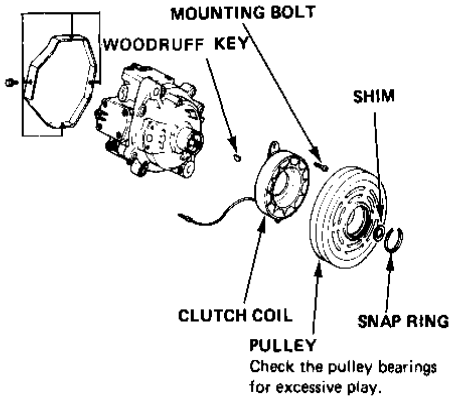

Assemble the clutch in the reverse order of disassembly, and also:

- Install the snap ring with its chamfered side facing out.
- When installing the snap ring, be careful not to damage the aluminum compressor snout.

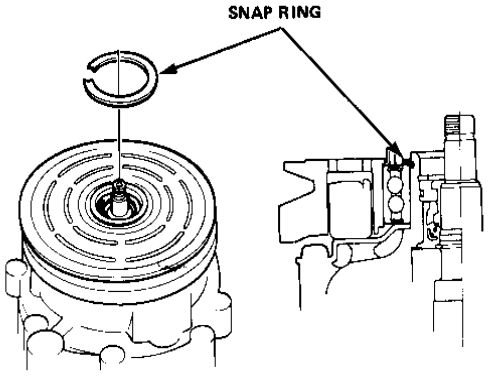

- Tighten the hub nut to specified torque.
  TORQUE: 4.0–4.5 kg-m (32–35 ft-lb)
- Recheck the pulley-to-pressure plate clearance and adjust if necessary.

(cont'd)

Compressor

Shaft Seal Replacement (HONDA/KEIHIN TYPE)

· **Removal**

NOTE: Make sure that the suction and discharge joints are plugged with the caps.

1. Remove the pressure plate (page 24-11).

   NOTE: Removal of the clutch pulley and coil is not necessary.

2. Remove the 32 mm snap ring.

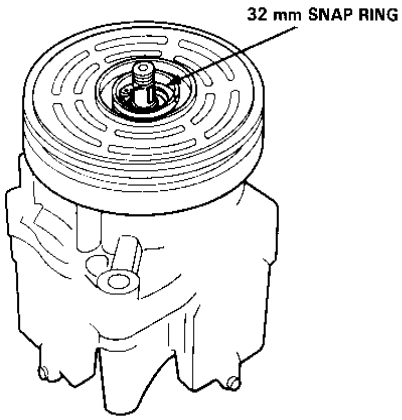

3. Remove the woodruff key from the key way.

4. Remove the shim(s).

   NOTE: Keep the woodruff key and shim(s) in a safe place such as a parts rack so they don't get damaged or lost.

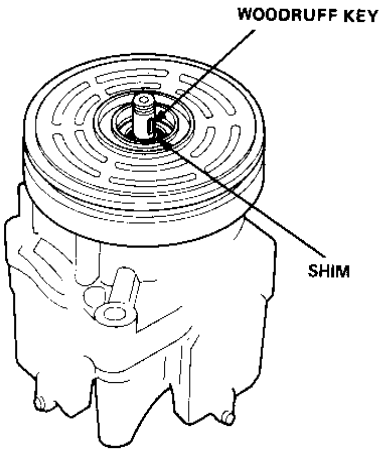

5. Hook the tip of the special tool (modified snap ring pliers) on the slot of the seal seat.

6. Pull out the seal seat.

   CAUTION: Move the tool in parallel with the compressor shaft. Do not damage the compressor.

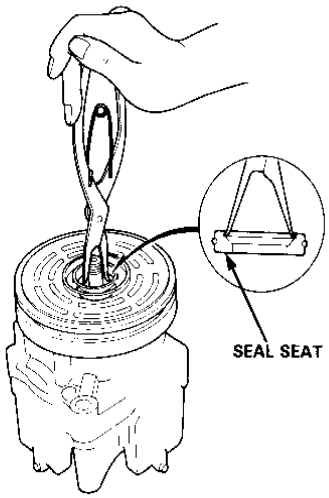

7. Insert the shaft seal remover into the compressor aligning the cutout in the remover with the metal pawl on the seal case.

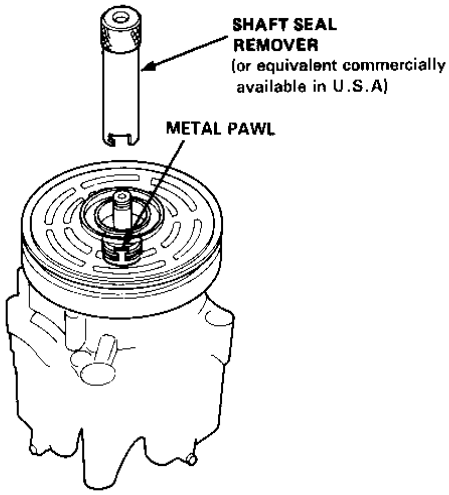

8. Rotate the Shaft Seal Remover clockwise or counterclockwise to make soure that the cutout is engage with the metal pawl.

9. Push the remover in until it bottoms, then turn it counterclockwise as far as it will go.

10. Withdraw the remover.

11. Lay down the compressor and clean its shaft with cleaning solvent

CAUTION:
- **Keep the cleaning solvent and dirt out of the compressor.**
- **Do not use any cloth for cleaning, clean only by rinsing with solvent.**
- **Do not spill any refrigerant oil from the compressor. If you do spill any, add the same amount.**

NOTE: Install the shaft seal assembly after the cleaning solvent is dry.

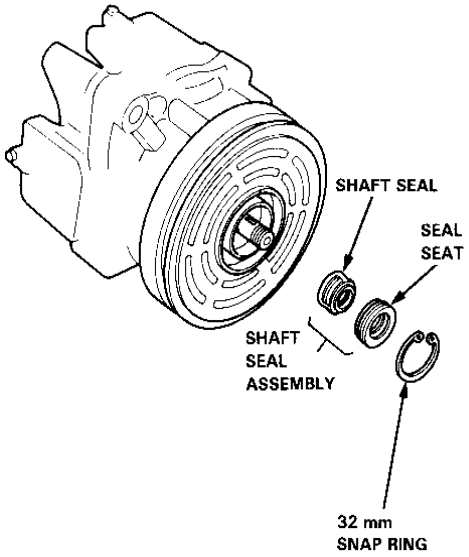

· Installation

1. Clean the new shaft seal with cleaning solvent thoroughly.

2. Lubricate the shaft seal with refrigerant oil (SUNISO 5GS or equivalent) and install it on the shaft seal remover.

NOTE:
- Use only clean oil.
- Do not touch the sealing surfaces of the seal after they're lubricated.

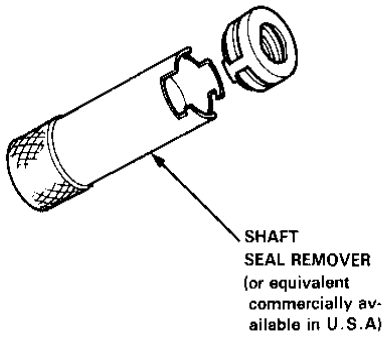

3. Liberally lubricate the compressor shaft with refrigerant oil.

4. Install the shaft seal onto the compressor shaft aligning the seal flats with the shaft flats.

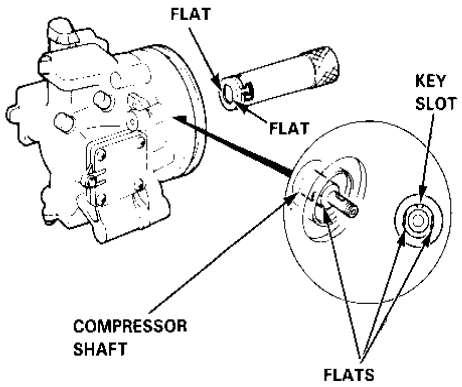

(cont'd)

Compressor

Shaft Seal Replacement (HONDA/KEIHIN TYPE cont'd)

5. Push the remover in until it bottoms, then turn it counterclockwise as far as it will go.

   NOTE: The remover will be lowered when the flats are aligned.

6. Turn the remover clockwise, then pull it out.

7. Make sure that the metal pawl of the seal case is approximately 0.5 mm (0.02 in) below the compressor shoulder as shown.

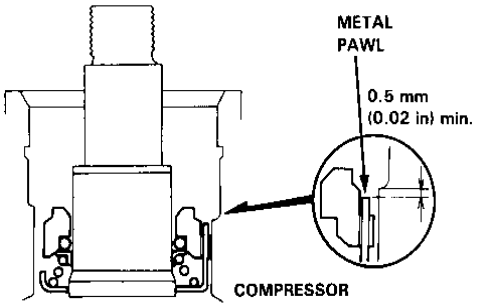

8. Check the inside diameter of the compressor for score marks or foreign particles.

9. Clean the seal seat with cleaning solvent, then lubricate the seal seat with refrigerant oil (SUNISO 5GS or equivalent).

   NOTE:
   - Use only clean oil.
   - Do not touch the sealing surface of the seal seat after it's lubricated.

10. First slide the seal seat into the compressor by hand as far as possible.

11. Push the seal seat in with the grip end of the remover.

    CAUTION: Be careful not to damage the compressor.

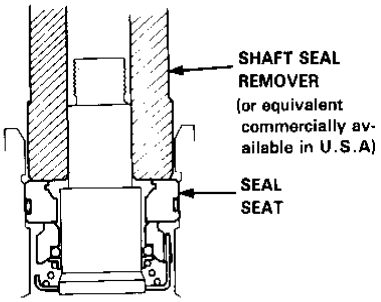

12. Again use the grip end of the remover and install the 32 mm snap ring with the its chamfered edge facing in.

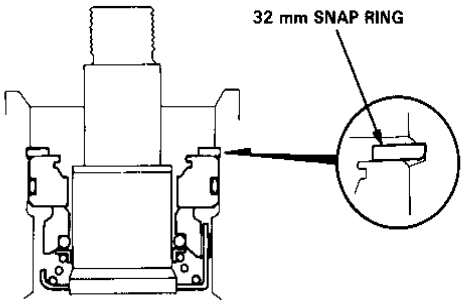

13. Install the shim(s) and woodruff key.

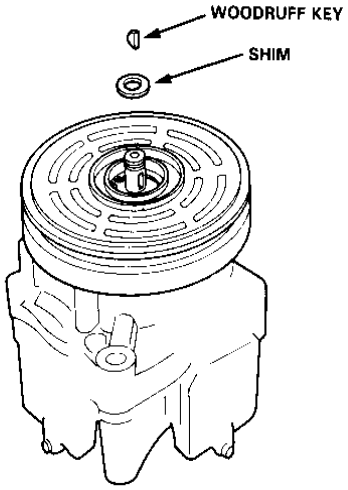

14. Evacuate and charge the compressor, then check it for leaks.

15. Install the pressure plate. Measure the clearance between the pulley and pressure plate all the way around. If the clearance is not within the specified limits, the shims must be added or removed as required.

Replacement (SANDEN TYPE)

1. Run the engine at idle speed and turn on the air conditioner for a few minutes.
2. Shut the engine off, and disconnect the battery negative terminal.
3. Disconnect the compressor clutch lead.
4. Remove the left front under cover and the engine lower grille cowling.
5. Discharge the refrigerant very slowly from the system(page 24-21).
6. Remove the receiver by disconnecting lines.

   CAUTION: Cap the open fittings immediately to keep moisture and dirt out of the system.

7. Disconnect the discharge hose and suction hose from compressor.

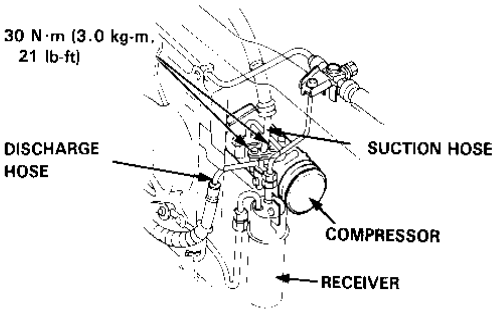

8. Loosen adjusting bolt B and release the tension from the compressor belt; remove the belt from the compressor pulley.

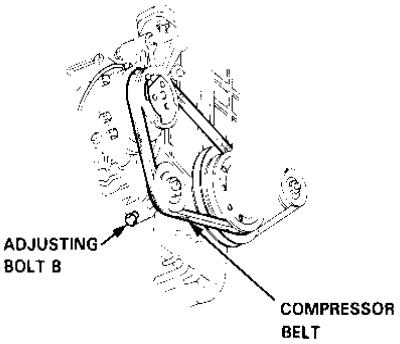

9. Remove the bolts holding the compressor.

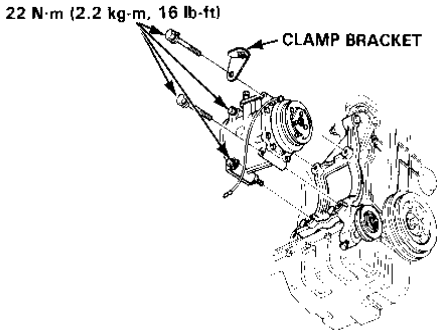

10. Remove the compressor bracket and idler pulley.

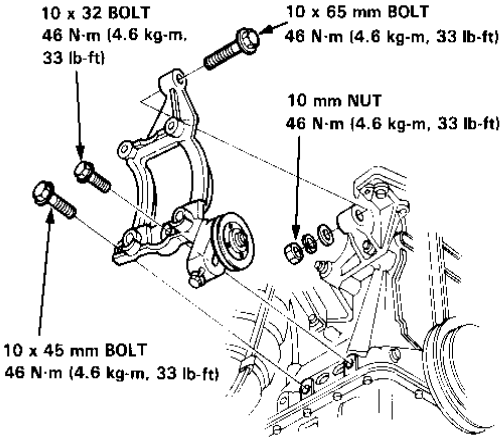

Install the compressor in the reverse order of removal, and:

- If a new compressor is installed, drain 30 cm^3 (cc) (1 fl oz.) of refrigerant oil through the suction fitting on the compressor.
- Adjust the belt.
  Belt tension: 8—10 mm (5/16—25/64 in) deflection when 98 N (10 kg, 22 lbs) force is applied between pulleys.
- When installing the compressor on the bracket, leave the upper bolt nearest the compressor clutch loose, until discharge hose has been fitted into the clamp bracket.
- Charge the system (page 24-23).
- Test the performance (page 24-4).

Compressor

Clutch Inspection (SANDEN TYPE)

- Check pulley bearing play and drag by rotating the pulley by hand. Replace the pulley with a new one if it is noisy or has excessive play and drag.

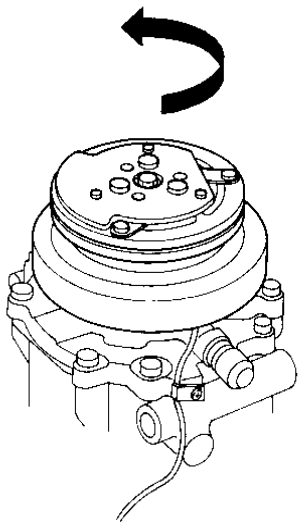

- Check the resistance of coil.

Coil Resistance:
3.0 ± 0.3Ω at 20°C (68°F)

If the resistance is not within specifications, replace the clutch coil with a new one.

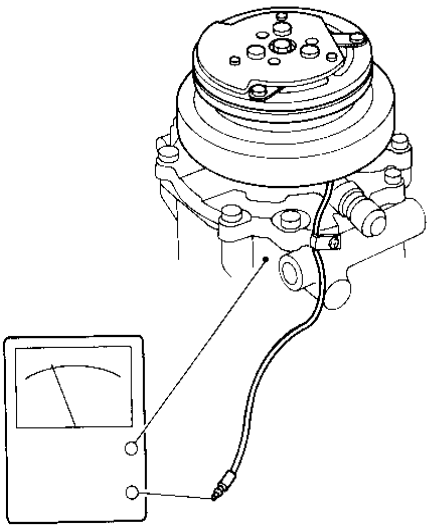

- Measure the clearance between the pulley and armature all the way around.
If the clearance is not within specified limits the armature must be removed and shims added or removed as required.

Rotor-to-Armature clearance:
0.35—0.65 mm (0.013—0.026 in)

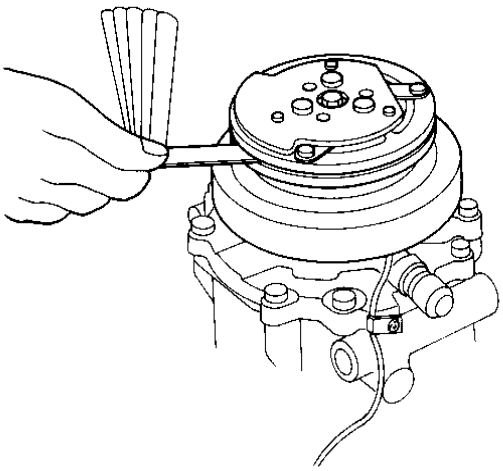

NOTE: The shims are available in sizes: 0.1 mm, 0.2 mm, 0.3 mm and 0.5 mm of thickness.
0.1 mm shim is used for minor adjustment.

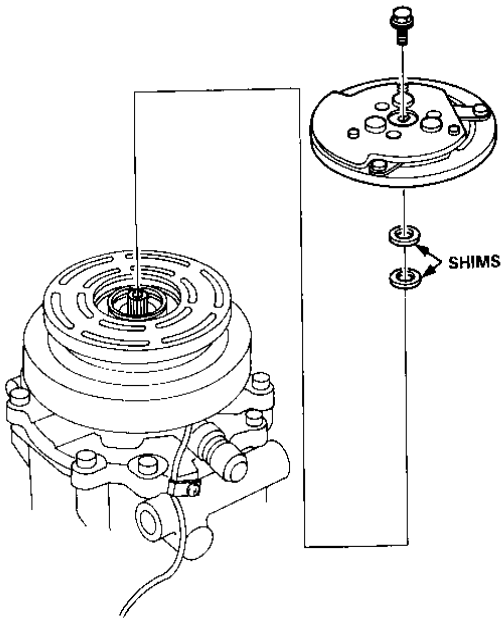

24-14

Clutch Overhaul (SANDEN TYPE)

1. Install the Armature Holder on the armature with the three lugs on the holder aligned with the holes in the armature.

   Remove the nut with a 8 mm box wrench while holding the armature with the holder.

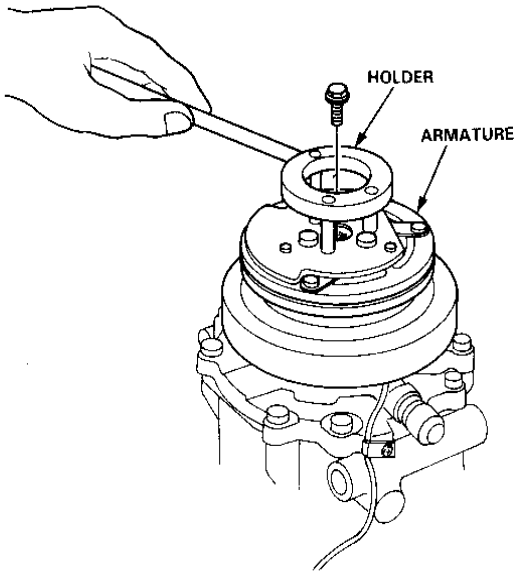

2. Pull the armature straight up with your hands. If difficulty is encountered in removing the armature, use the special "Armature Remover" tool as follows:

   Screw the three bolts of the Armature Remover into holes of the armature as shown. Turn the drive bolt clockwise until the armature is clear of the clutch shaft.

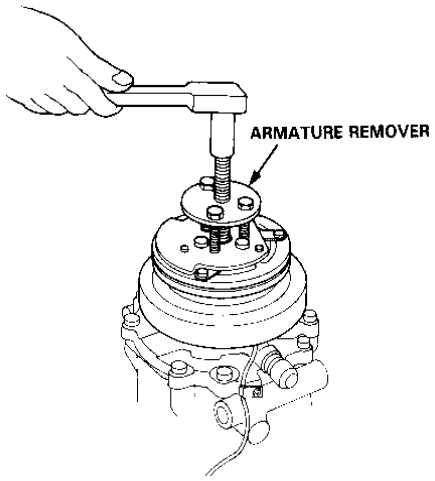

3. Take out the shims with your fingers.

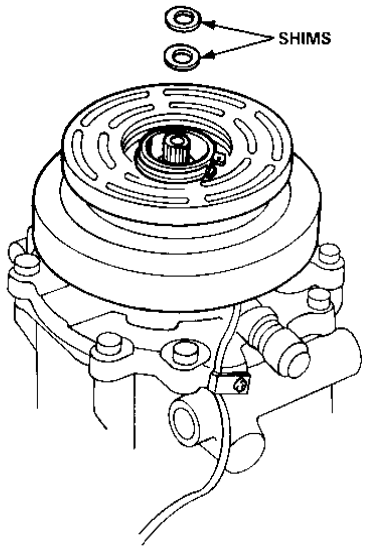

4. Remove the snap ring from the ring groove using snap ring pliers.

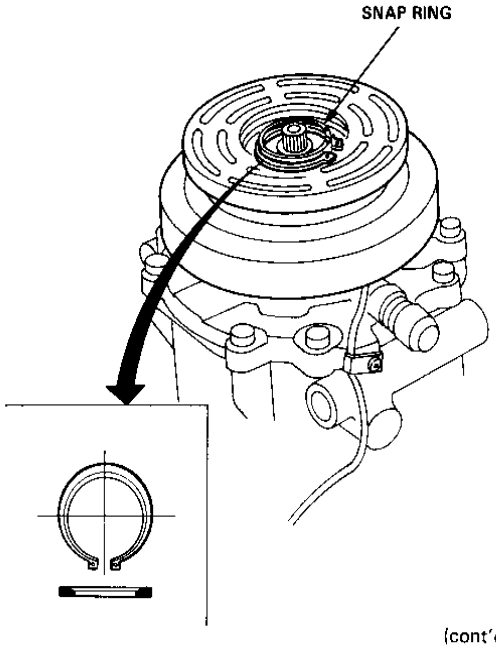

(cont'd)

Compressor

Clutch Overhaul (SANDEN TYPE cont'd)

5. Remove the rotor pulley.

   Pull the rotor assembly out by hand.
   If difficulty is encountered in removing the rotor assembly, then use the special "Rotor Pulley" tool as follows:
   - Adjust the wing screws so the pawls of the tool hook into the inner groove of the rotor pulley.
   - While holding the tool with your left hand, turn the bolt clockwise until the rotor pulley is clear of the clutch shaft.

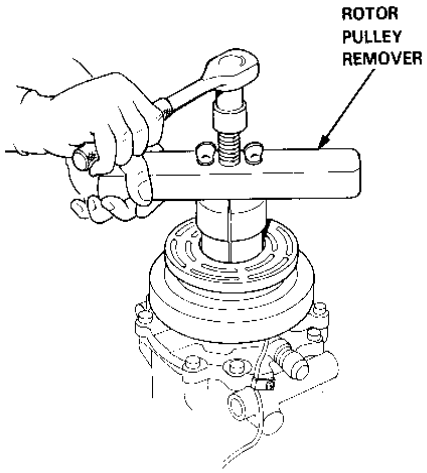

   NOTE: Do not turn the bolt counterclockwise or the tool will be damaged.

6. Remove the Field Coil.

   - Loosen the clamp screw and remove the field coil leads from the compressor.

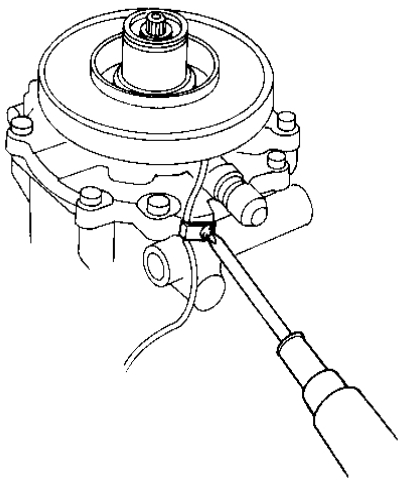

   - Remove the snap ring from the groove in the compressor.
     Remove the field coil from the compressor.

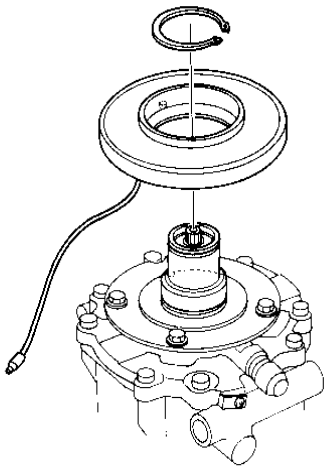

   - Reassemble the compressor in the reverse order of disassembly.

   NOTE:
   - When installing the field coil, make sure to align the lugs on the coil with the cutout on the plate.
   - When installing the rotor pulley, make sure to align the slots on the bearing inner race with the split pins.

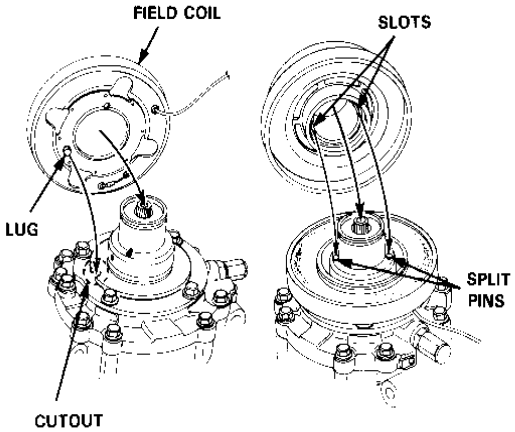

Evaporator

Replacement

1. Disconnect the battery negative terminal.
2. Discharge the refrigerant (page 24-21).
3. Disconnect the receiver line and suction hose from the evaporator.

   CAUTION: Cap the open fittings immediately to keep moisture and dirt out of the system.

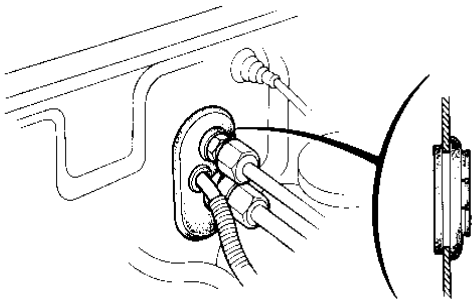

4. Remove the glove box (hatchback and sedan) or passenger's tray (wagon).
5. Remove the glove box frame (hatchback and sedan).
6. Disconnect the wire harness from the thermostat.
7. Loosen the sealing band screw and slide the sealing band to the right.
8. Disconnect the wire harness from blower.
9. Loosen the evaporator mounting bolts, then remove the blower mounting bolts and remove the blower.

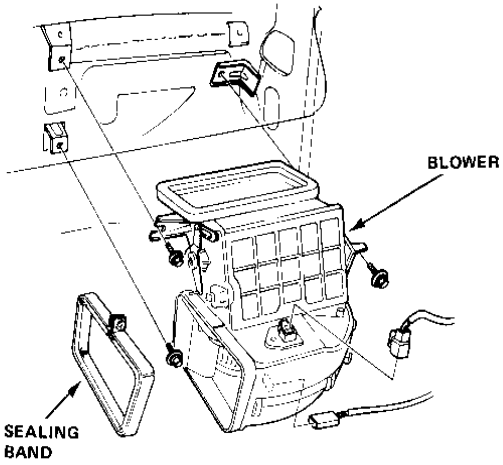

10. Remove the evaporator bolts and remove the evaporator.

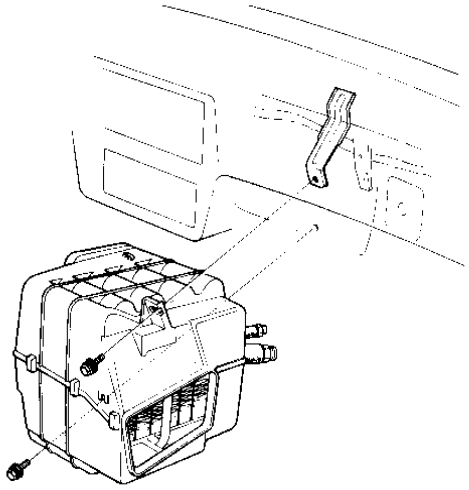

Install the evaporator in the reverse order of removal, and:

- If a new evaporator is installed, add 30 cm^3 (cc) (1 fl oz) of refrigerant oil to it before charging.
- Tighten the sealing band securely to prevent air leaks.
- Apply a sealant to the grommets.
- Route the drain tube correctly.
- Charge the system (page 24-23).
- Test the performance (page 24-4).

Evaporator

Overhaul

1. Remove the self-tapping screws and clips from the housing.
2. Remove the capillary tube of the thermostat from the evaporator fins.
3. Separate the housings and remove the evaporator covers.
4. Remove the expansion valve, if necessary.

Assemble the evaporator in the reverse order of disassembly, and:.
- Install the expansion valve capillary tube against the suction line, and wrap it with tape.
- Reinstall the thermostat capillary tube in its original position.

NOTE: When replacing a thermostat, first insert the capillary tube through the hole in the evaporator case, then bend the tube to the dimension shown.
Doing this will ensure that the capillary tube penetrates far enough into the evaporator core to allow proper on/off cycling of the A/C system.

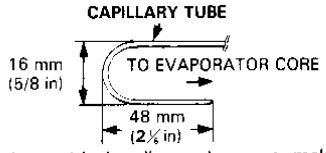

- Reassemble the upper and lower housings with the clips and screws, making sure there are no gaps between them.

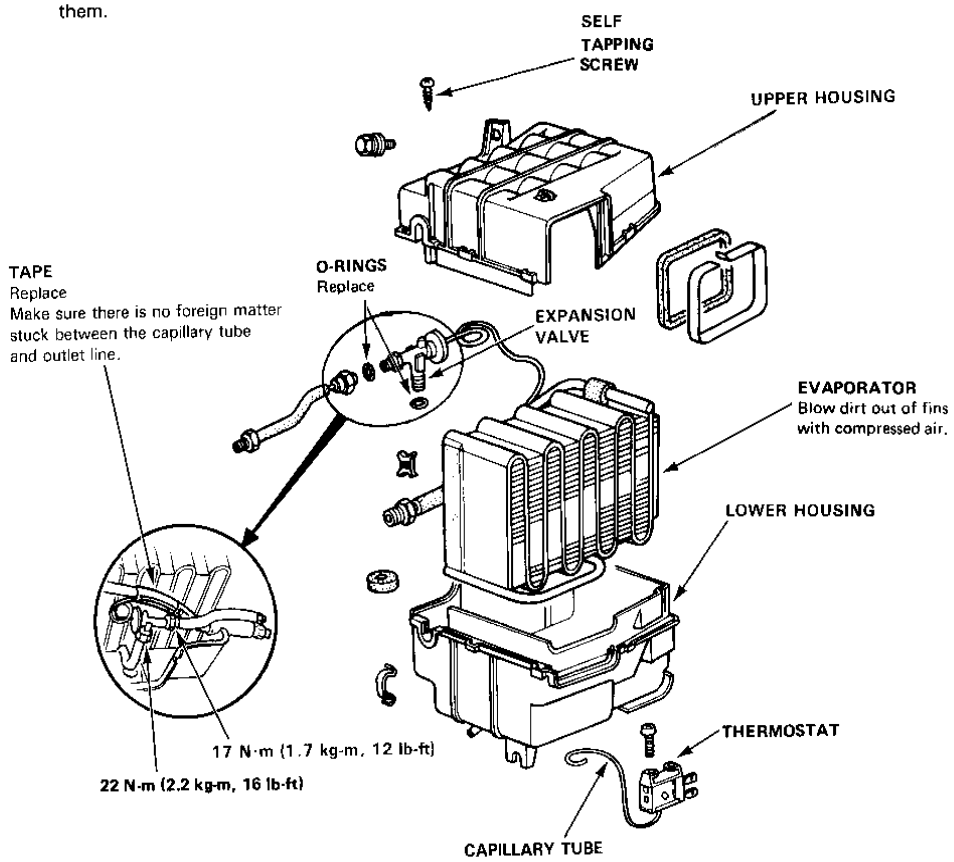

Condenser

Replacement

1. Disconnect the battery negative terminal.
2. Discharge the refrigerant (page 24-21).
3. Remove the front bumper.

CAUTION:
- **Cap the open fittings immediately to keep moisture and dirt out of the system.**
- **Be careful not to damage the condenser fins and tubes.**

4. Disconnect the aluminum receiver line from the copper receiver line and the sight glass.
5. Remove the right upper condenser mount bolt and receiver line bracket.

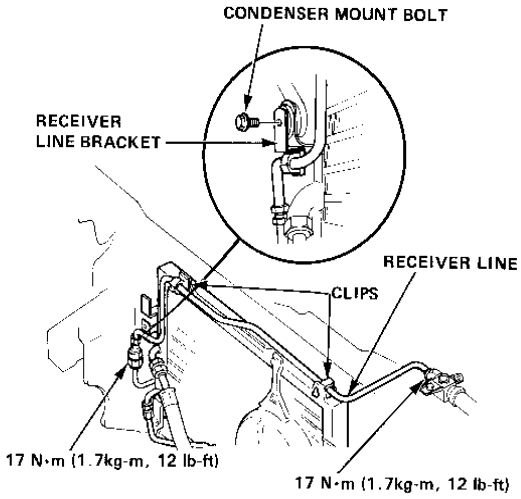

6. Remove discharge hose clamp, then disconnect the discharge hose from the condenser.

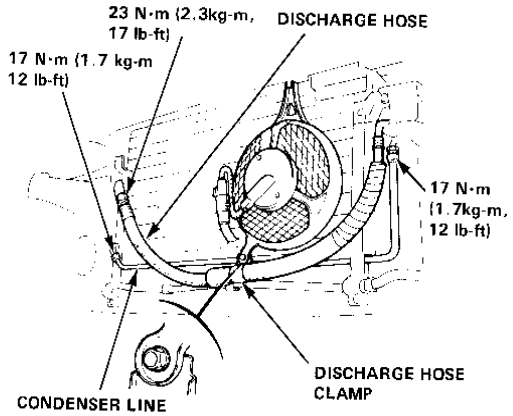

7. Disconnect the condenser line from the receiver dryer and the condensor dryer.
8. Disconnect the wire harness from the condenser fan motor.
9. Remove the condenser mount bolts, the upper baffle plate and the condenser, then remove the lower and upper of the aluminum receiver line from the condenser.

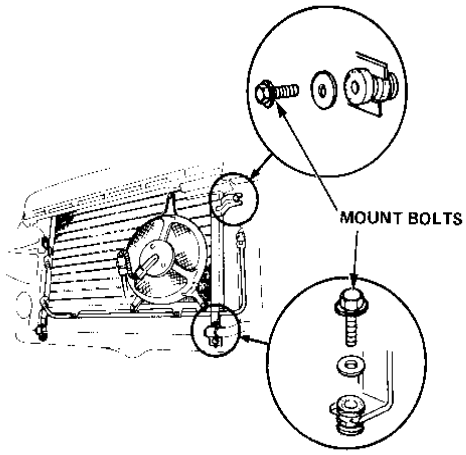

10. Remove the condenser fan should if necessary.

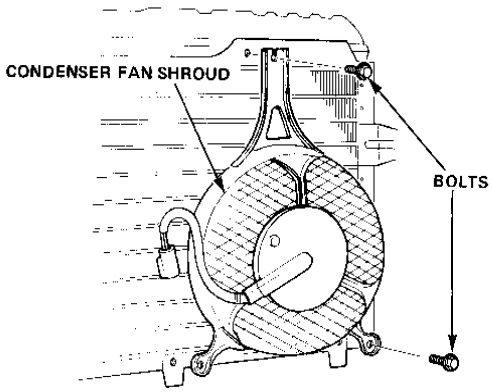

Install the condenser in the reverse order of removal, and:

- If a new condenser is installed, add 10 cm^3 (cc) (1/3 fl oz.) of refrigerant oil to it.
- Charge the system (page 24-23).
- Test the performance (page 24-4).

Test

Thermostat Testing

Dip the thermostat's capillary tube into a pan filled with ice water, and check for continuity.

Cut-off..... −0.5°C – 1.5°C (31° – 35°F)
Cut-in ..... 2.5°C – 5°C (37° – 41°F)

If cut-off or cut-in temperature is too low or too high, replace the thermostat.

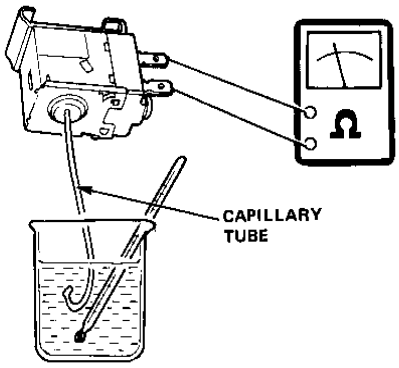

A/C Switch Testing

Check for continuity according to the table below.

Terminal / Position	C	T		B
OFF		○	⊕	○
ON	○	○	⊕	○
Wire Color	G	Bu/R		Y/Bl

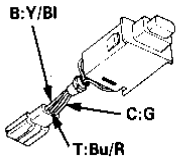

Relay Testing

1. Check for continuity between terminals"A"and"B". There should be no continuity.
2. Connect a 12 V battery across terminals"C"and"D". There should be continuity between terminals"A"and "B".

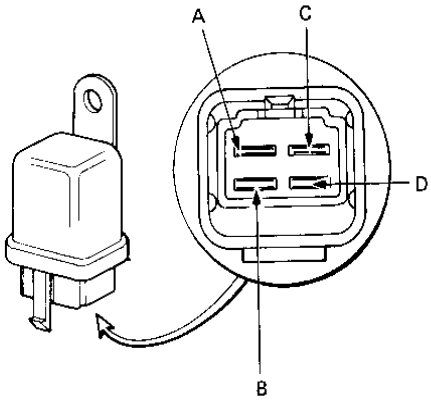

Delay Control Unit Testing

1. Connect a 12V battery, resistor and switch to the delay control unit, as shown below.
2. Connect the positive probe of a voltmeter to the OUT1 terminal and the negative probe to"E"terminal. Check that 12 volts are available when the switch is turned on.
3. Turn off the switch.
4. Connect the positive probe of the voltmeter to the OUT2 terminal and the negative probe to"E"terminal. Check that 12 volts appear the moment the switch is turned on, and that this voltage is lowered to 1 volt after approximately 0.5 second.

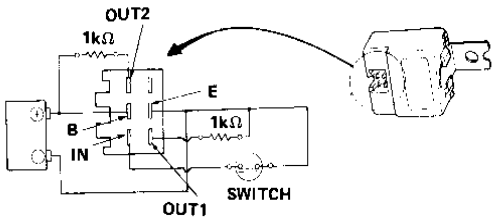

Pressure Testing

1. Connect the gauges as shown.
2. Close both high and low pressure valves.
3. Test with the hood up, doors and windows open, temperature lever on COLD (left end) mode control lever on VENT and fan maximum high speed.
4. Leave the air conditioner on about 10 min. The sight glass should be free of bubbles.

   NOTE: Run the engine at 1,500 rpm.
5. The high pressure reading should be about 2,250 kPa (22.5 kg/cm², 320 psi).

   NOTE: See the chart on page 24-4 for conditions necessary to produce this pressure reading.

   Low pressure reading: about 250 kPa (2.5 kg/cm², 36 psi).
   If the readings are not correct for the condition where you're working, refer to the troubleshooting chart on page 24-6.

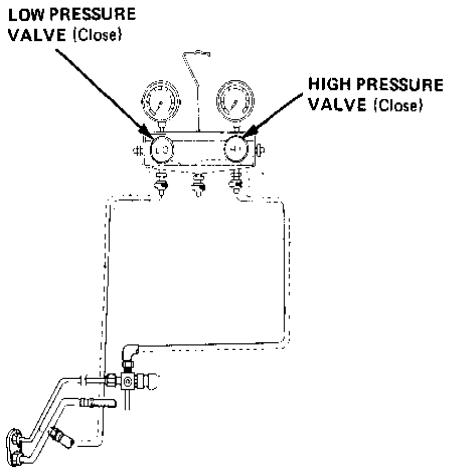

Discharge Procedure

WARNING

- **Keep away from open flames. The refrigerant, although nonflammable, will produce a poisonous gas if burned.**
- **Work in a well-ventilated area. Refrigerant evaporates quickly, and can force all the air out of a small enclosed area.**

1. Connect the gauges as shown.
2. Disconnect the center hose of the gauge set and place the free end in a shop towel.
3. Slowly open the high side manifold valve slightly to let refrigerant flow from the center hose only. Do not open the valve too wide. Check the shop towel to make sure no oil is being discharged with the refrigerant.
   CAUTION: If refrigerant is allowed to escape too fast, compressor oil will be drawn out of the system.
4. After the high pressure gauge reading has dropped below 1,000 kPa (10.0 kg/cm², 142 psi), open the low side valve to discharge both high and low sides of the system.
5. Note the gauge readings and, as system pressure drops, gradually open both high and low side valves fully until both gauges indicate 0 kPa (0 kg/cm² 0 psi).

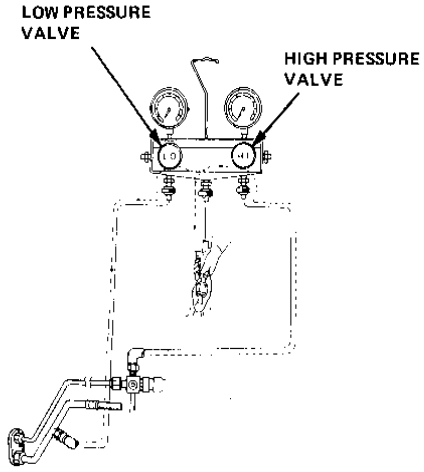

System Evacation

NOTE: When an A/C system has been opened to the atmosphere, such as during installation or repair, it must be evacuated using a vacuum pump. (If the system has been open for several days, the receiver-dryer should be replaced).

1. Attach a gauge set and pump as shown, connecting the center charging hose to the pump inlet.
2. Start the pump, then open both gauge valves. Run the pump for about 15 minutes. Close the valves and stop the pump. The low gauge should indicate above 700 mm Hg (27 in-Hg) and remain steady with the valves closed.
   NOTE: If low pressure does not reach more than 700 mm Hg (27 in-Hg) in 15 minutes, there is probably a leak in the system. Check for leaks, and repair (see Leak Test below).
3. If there are no leaks, open the valves and continue pumping for at least another 15 minutes, then close both valves, stop the pump and disconnect it from the center charging hose.

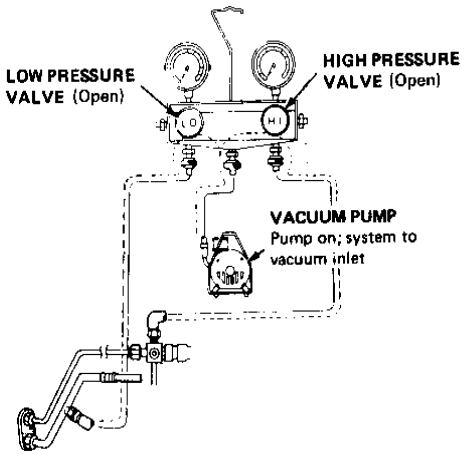

Leak Testing

WARNING When handling refrigerant (R-12):

- **Always wear eye protection.**
- **Do not let refrigerant get on your skin or in your eyes. If it does:**
  - **Do not rub your eyes or skin.**
  - **Splash large quantities of cool water in your eyes or on your skin.**
  - **Rush to a physician or hospital for immediate treatment. Do not attempt to treat it yourself.**
- **Keep refrigerant containers (cans of R-12) stored below 40°C (100°F).**
- **Keep away from open flame. Refrigerant, although non-flammable, will produce poisonous gas if burned.**
- **Work in well ventilated area. Refrigerant evaporates quickly, and can force all the air out of a small, enclosed area.**

1. Attach a refrigerant supply and gauge set as shown, with all valves closed. Then open the refrigerant supply valve on the can.
2. Loosen the center charging hose fitting at the gauge to purge any air from the hose, until it hisses for a few seconds, then tighten it again.
3. Open both gauge valves to charge the system to about 100 kPa (1.0 kg/cm², 14 psi), then close the supply valve.
4. Check the system for leaks using a leak detector.
5. If you find leaks that require the system to be opened (to repair or replace hoses, fittings, etc.), release any charge in the system according to the Discharge Procedure on the previous page.
6. After checking and repairing leaks, the system must be evacuated (see System Evacuation above).

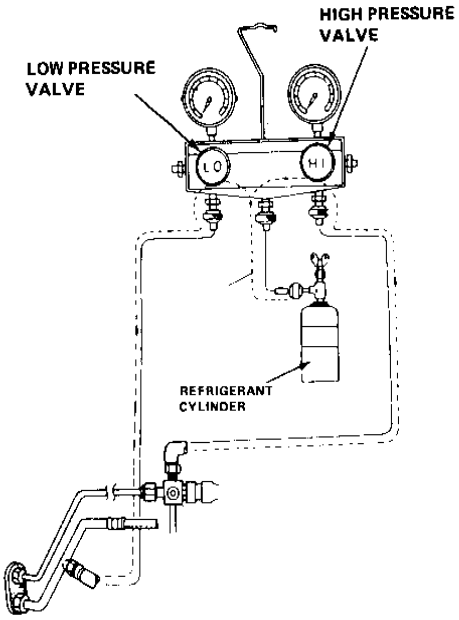

System Charging

WARNING **Always wear eye protection when charging the system.**

VAPOR CHARGING through the low side:

1. After evacuating the system, close both the high and low pressure valves and romove the vacuum pump.
2. Attach the refrigerant valve onto the refrigerant can.
3. Loosen the center connector a little at the gauge, that is connected to the refrigerant can.
4. Purge air from the center connector by opening the refrigerant valve, then tighten the center connector securely.
5. Charge the system with refrigerant by opening the high pressure valve.
   CAUTION
   - **Do not open the low pressure valve.**
   - **Do not start the engine or turn the A/C switch on while charging.**
6. Close the high pressure valve when the charging speed slow down (i.e. high pressure gauge needle slows down).
7. Be sure that the high pressure valve is closed,then start the engine, turn the fan switch to Hi, and turn the A/C switch on.
   NOTE: Run the engine below 1,500 rpm.
8. Charge the system with refrigerant by opening the low pressure valve.
   CAUTION
   - **Do not open the high pressure valve. High pressure gas transfers backward into the can causing it to explode.**
   - **Do not keep the refrigerant can upside down.**
9. Charge the system with the specified amount of refrigerant until the sight glass is free of bubbles, indicating a full charge. Low gauge should not show over 190 psi.
   Specified amount of refrigerant: 750—850 g (26 29 oz)
   CAUTION: Overcharging willl damage the compressor.
10. When fully charged, close the low pressure valve and refrigerant valve and stop the engine.
11. Quickly disconnect the charging hoses from the check joints.

LIQUID CHARGE through the high pressure side:
Following the charging station manufacturer's instructions, charge the system with 750- 850 g (26 -30 oz) of refrigerant.

WARNING **Do not use disposable cans to charge through the high pressure side of the system. System pressure could transfer into the can causing it to explode. Use only the bulk supply of refrigerant from the charging station.**

CAUTION: If you run the engine during liquid charge, the compressor will be damaged.

Step 1~5:

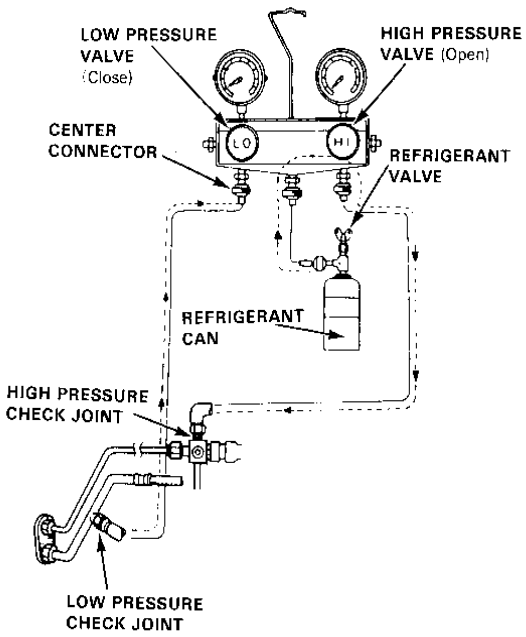

Step 6~10:

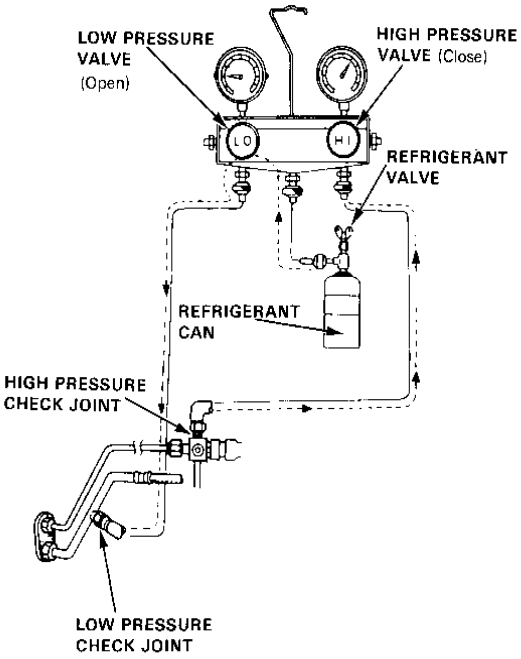

Idle Boost System

Replacement

Carbureted Engine:

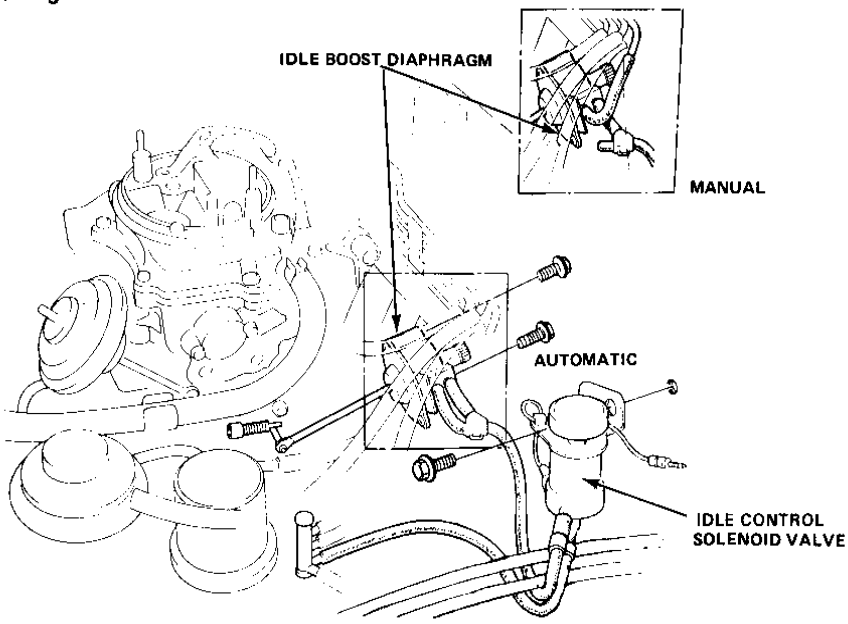

Fuel-Injected Engine:

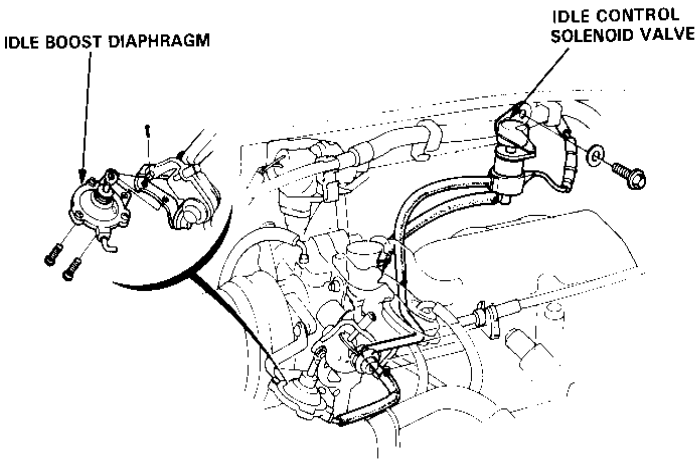

24-24

Idle Speed Adjustment

Carbureted Engine

1. Before adjustment (with A/C ON), check that the idle speed is adjusted properly (Secotion 11).

2. After charging, adjust the idle speed by turning the idle adjusting screw in or out as required with the air conditioner ON.
   - Apply the parking brake and block the wheels.
   - Headlights ..... OFF
   - A/C Temperature lever ..... MAX COLD (left end)
   - Vent and recirc lever ..... ON
   - Fan switch ..... MAX

IDLE SPEED rpm

		CAL	49 ST and HI ALT	
1300		700±50	700±50	750±50 ↕ 800±50
1500	Manual	750±50	750±50	
	Auto-matic	750±50	750±50	

↕: The lower number is if idle is measured at high altitude; the higher number is if idle is measured at low altitude.

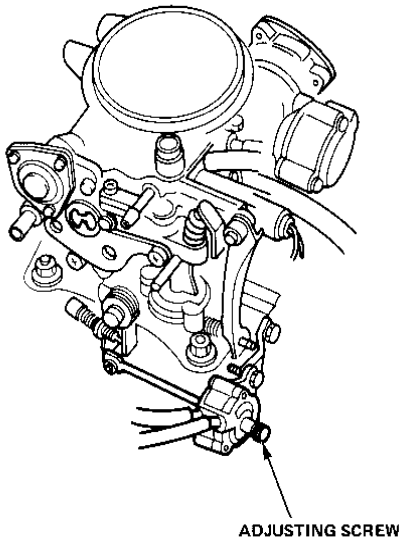

Fuel-Injected Engine

1. Start engine and warm-up to normal operating temperature; the cooling fan will come on.
2. Connect a tachometer.
3. Check idle speed with the headlights, heater blower, rear window defroster, cooling fan and air conditioner off.

   NOTE: To prevent the idle control system from operating pinch the vacuum hose #10. (See section 11)

   Idle speed should be: 750 ± 50 rpm

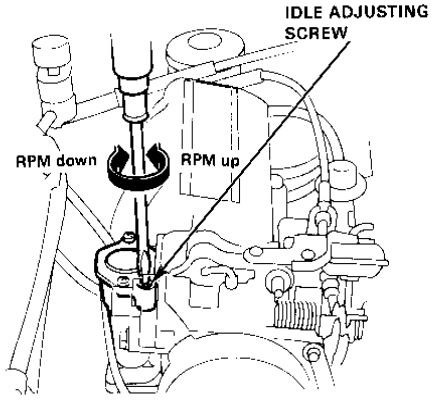

Adjust the idle speed, if necessary, by turning the idle adjusting screw.

- If idle speed cannot be adjusted by turning the idle adjusting screw, check the fast idle valve (Secotion 11).

4. Check the idle controller boosted speed with the A/C on.

   Idle speed should be: 750 ± 50 rpm

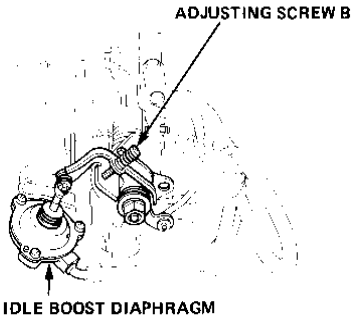

Adjust the idle speed, if necessary, by turning adjusting screw B.

Engine Electrical

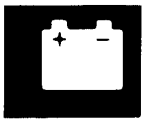

Engine Electrical

Illustrated Index

Before Troubleshooting:

- Check the main fuse and the fuse box.
- Check the battery for damage, state of charge, and clean and tight connections.

  CAUTION:
  - **Do not quick-charge a battery unless the battery ground cable has been disconnected, or you will damage the alternator diodes.**
  - **Do not attempt to crank the engine with the ground cable disconnected or you will severely damage the wiring.**

- Check alternator belt tension.

While you're working:

- Make sure connectors are clean, and have no loose pins or receptacles.

  CAUTION: Do not pull on the wires when disconnecting a connector; pull only on the connector housings.

- When connecting a connector, push it until it clicks into place.
- Make sure multiple pin connectors are packed with silicone grease.

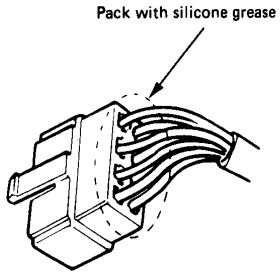

Carbureted Engine:

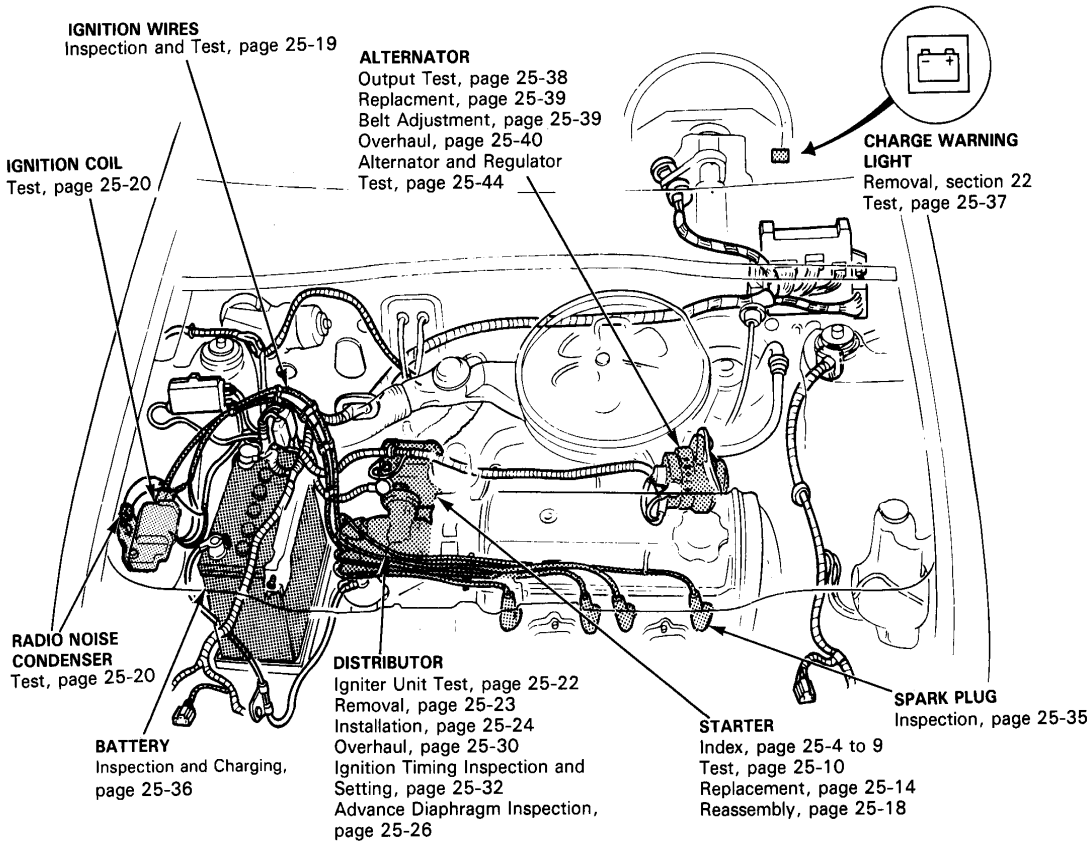

Fuel-Injected Engine:

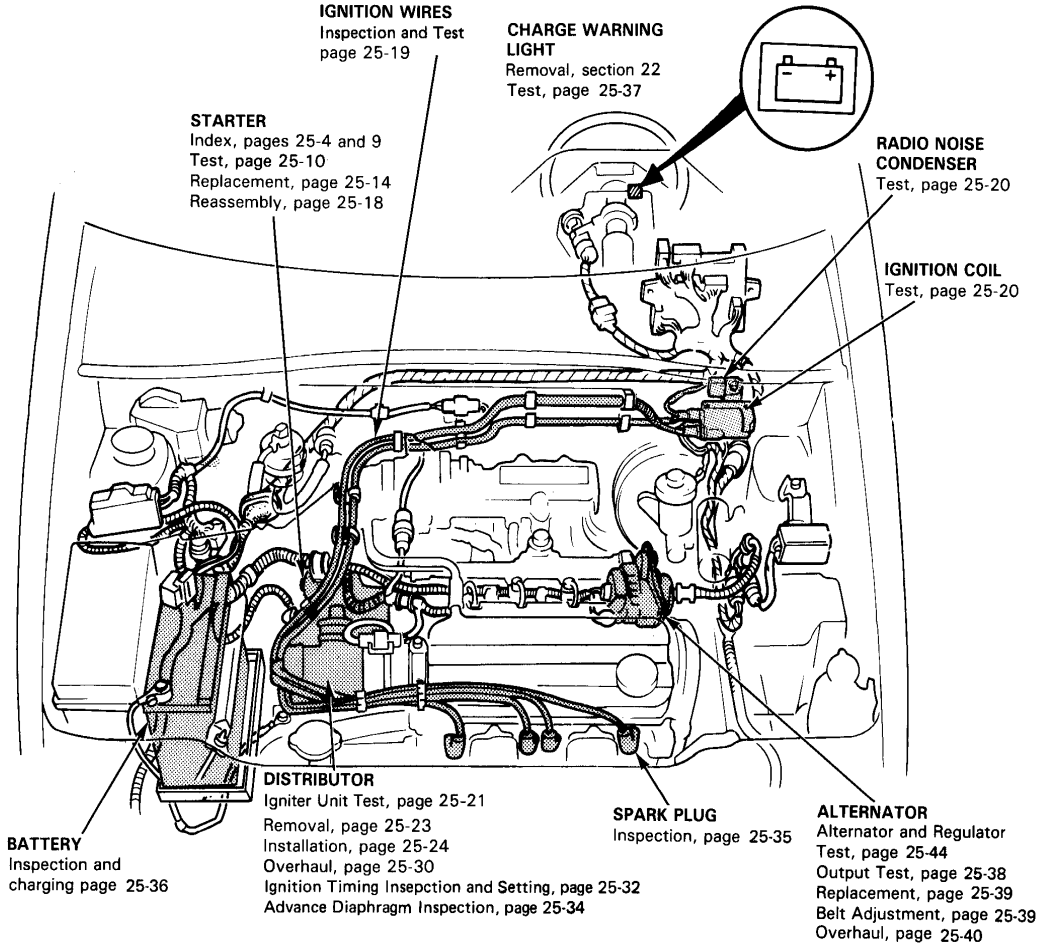

Engine Electrical

Starter Illustrated Index (Direct drive 0.8 kw, Hitachi)

Carbureted Engine (CAL):

CAUTION: Disconnect the ground cable from the battery post before removing the starter.

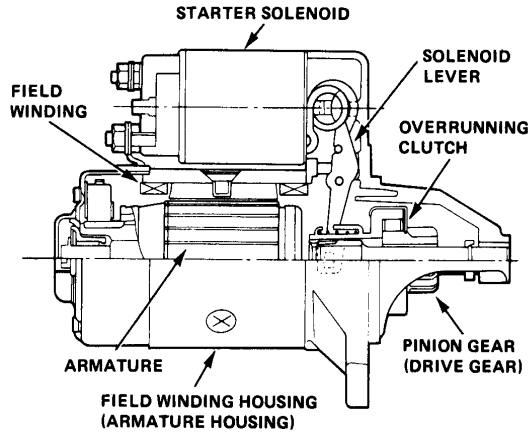

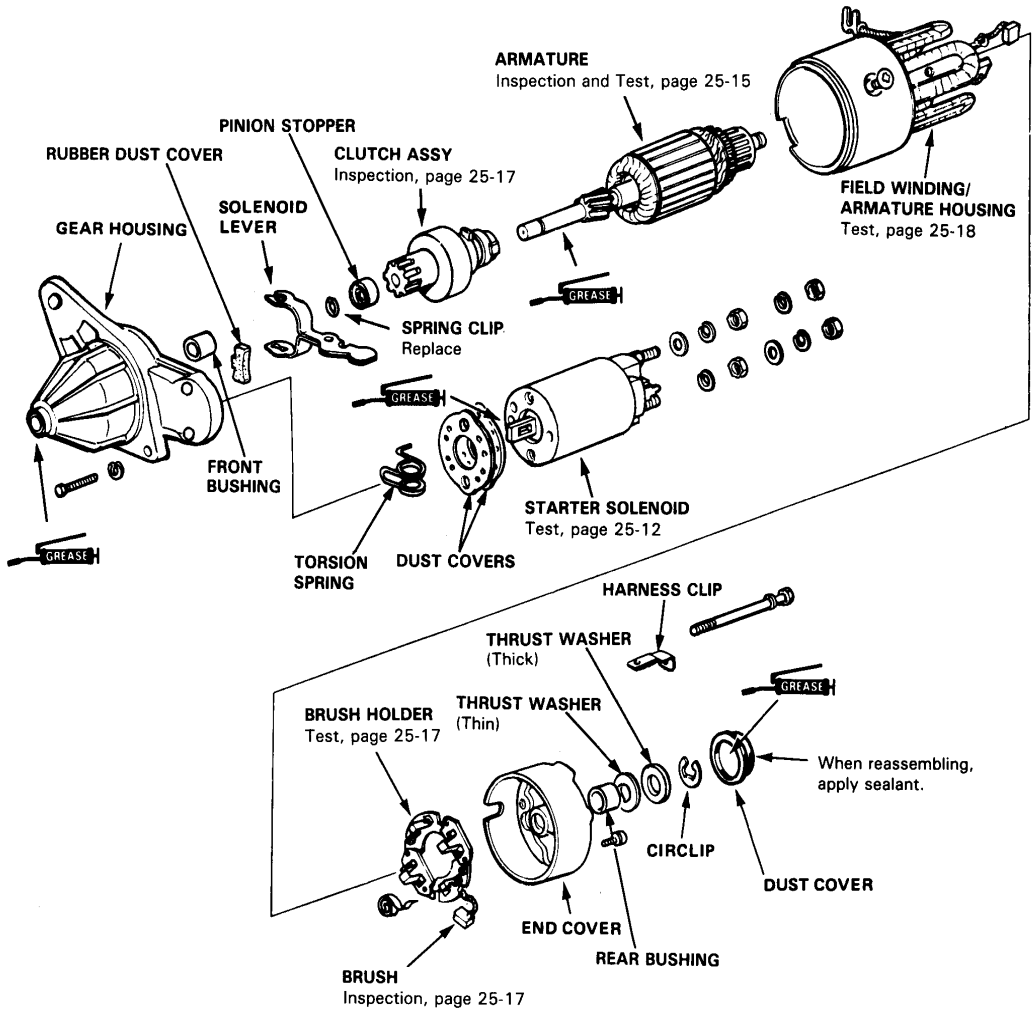

(Direct drive 0.8 kw , ND)

Carbureted Engine (CAL):

CAUTION: Disconnect the ground cable from the battery post before removing the starter.

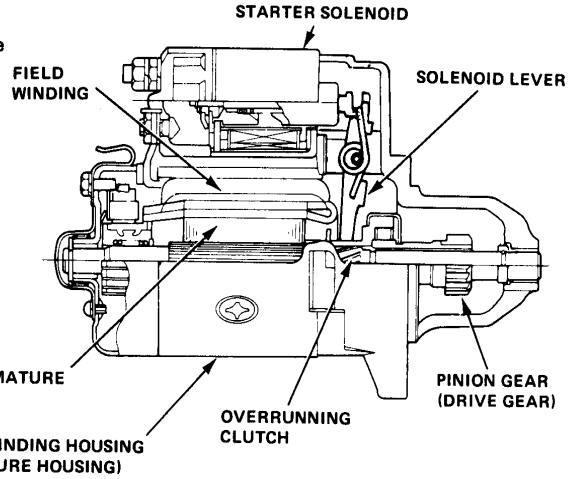

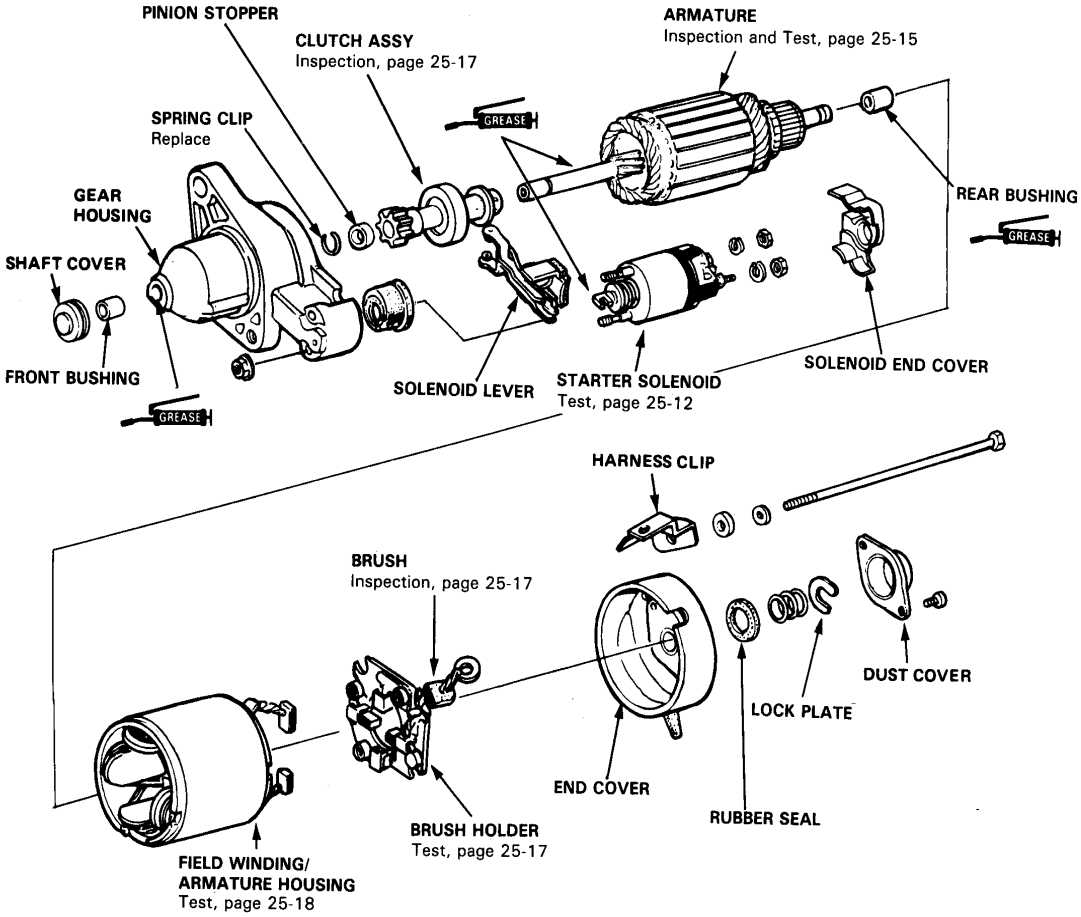

Engine Electrical

Starter Illustrated Index (Gear reduction 1.0 kw , Mitsuba)

Fuel-Injected Engine and Carbureted Engine Manual (49 ST and HI ALT):

CAUTION: Disconnect the ground cable from the battery post before removing the starter.

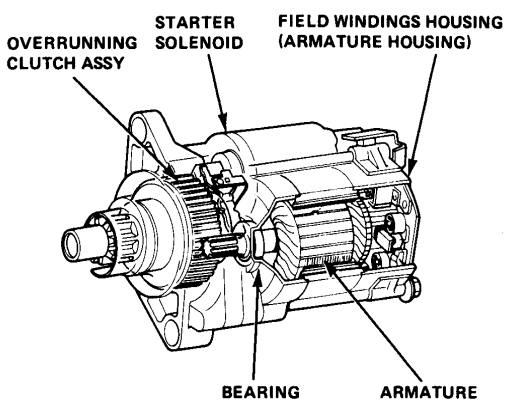

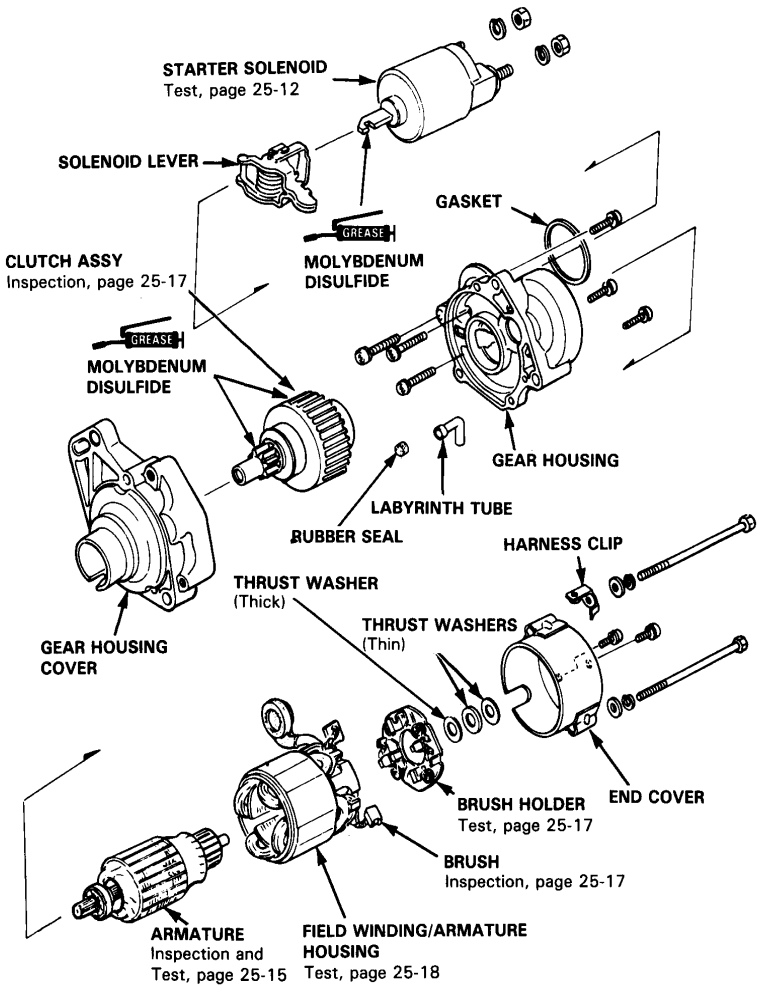

(Gear reduction 1.0 kw, ND)

Fuel-Injected Engine and Carbureted Engine Manual (49 ST and HI ALT):

CAUTION: Disconnect the ground cable from the battery post before removing the starter.

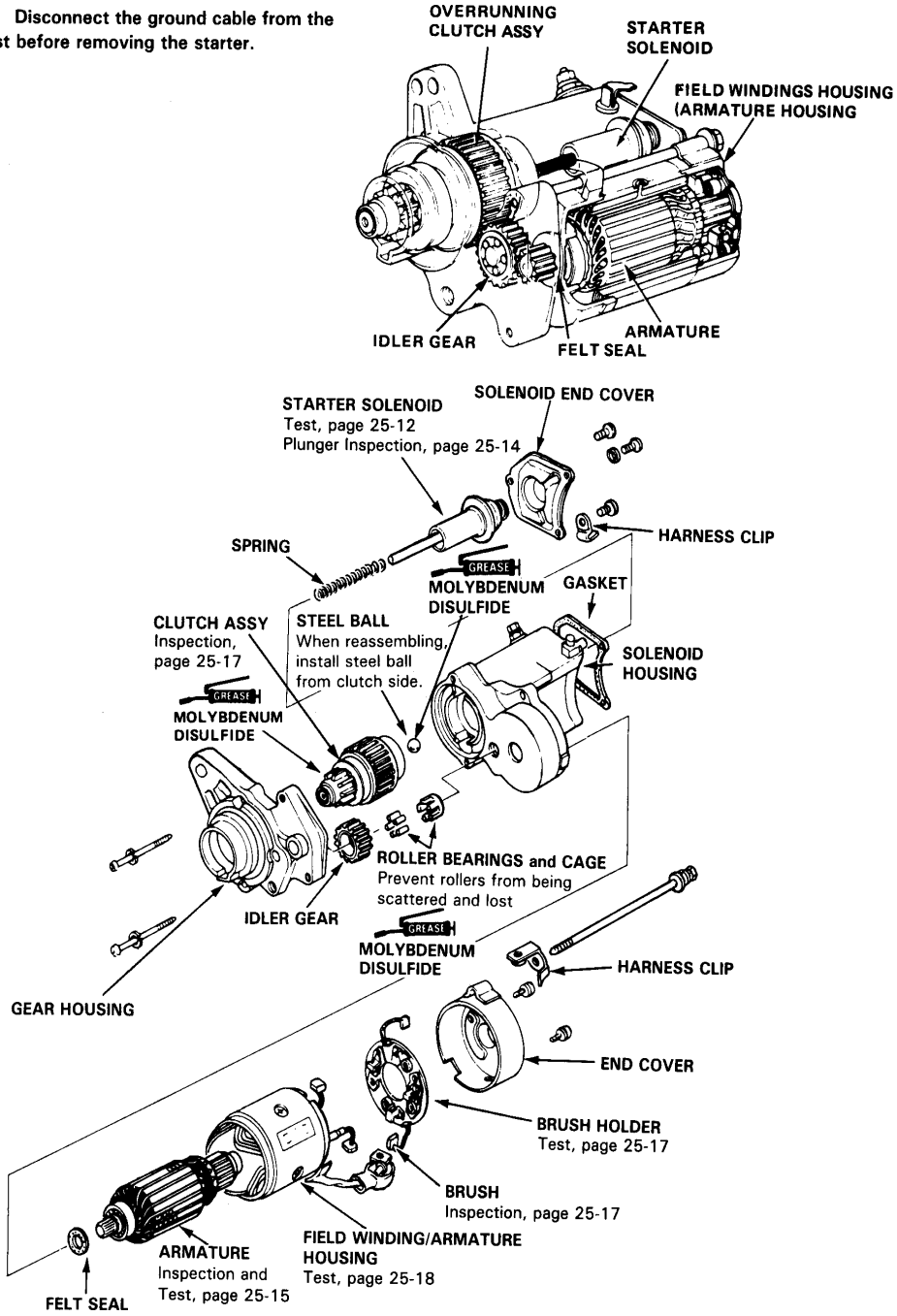

Engine Electrical

Starter Illustrated Index (Gear reduction 1.4 kw, Mitsuba)

Carbureted Engine Automatic (49 ST and HI ALT):

CAUTION: Disconnect the ground cable from the battery post before removing the starter.

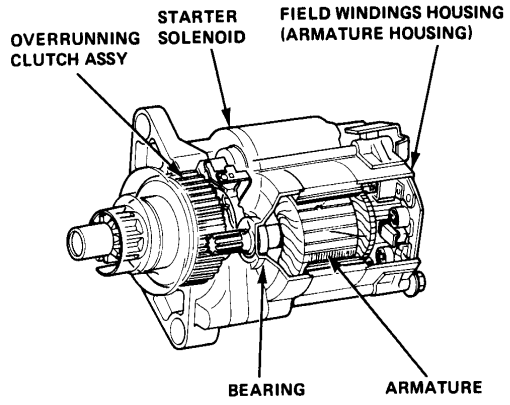

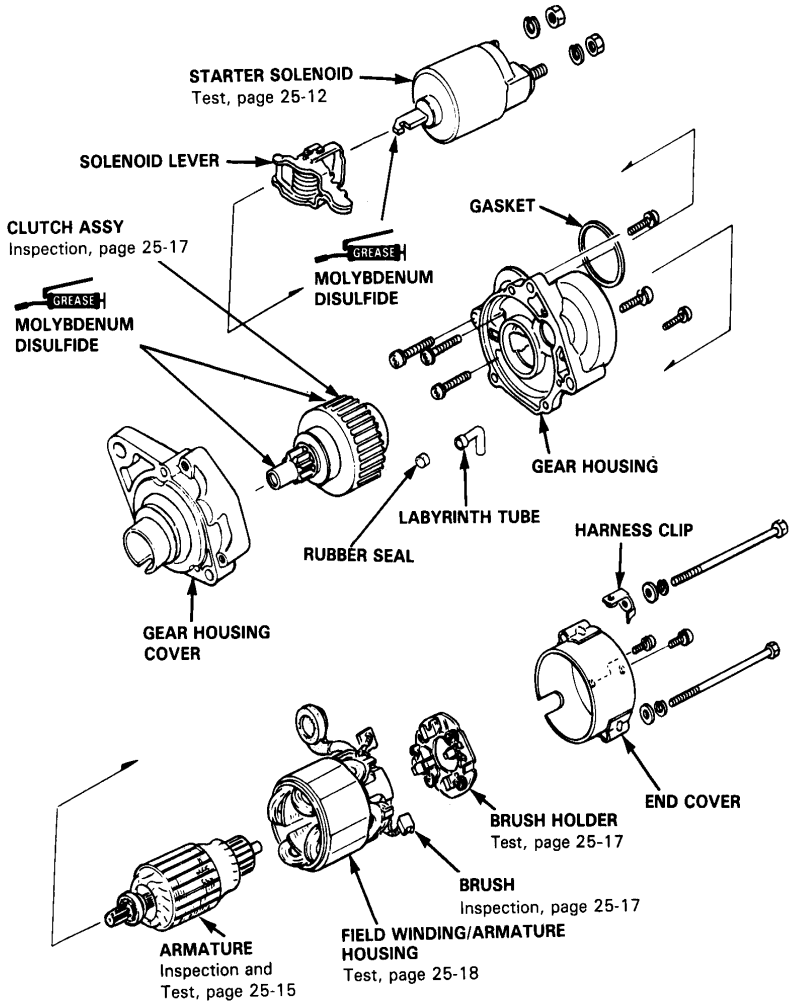

(Gear reduction 1.4 kw , ND)

Carbureted Engine Automatic (49 ST and HI ALT)

CAUTION: Disconnect the ground cable from the battery post before removing the starter.

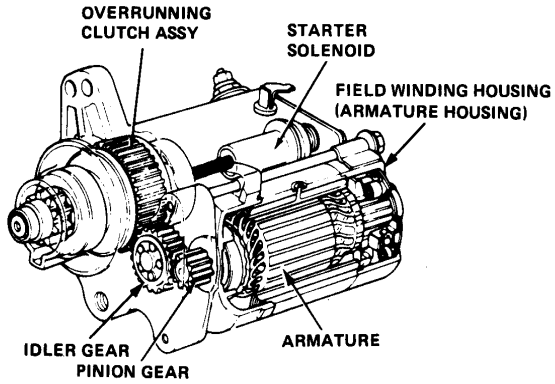

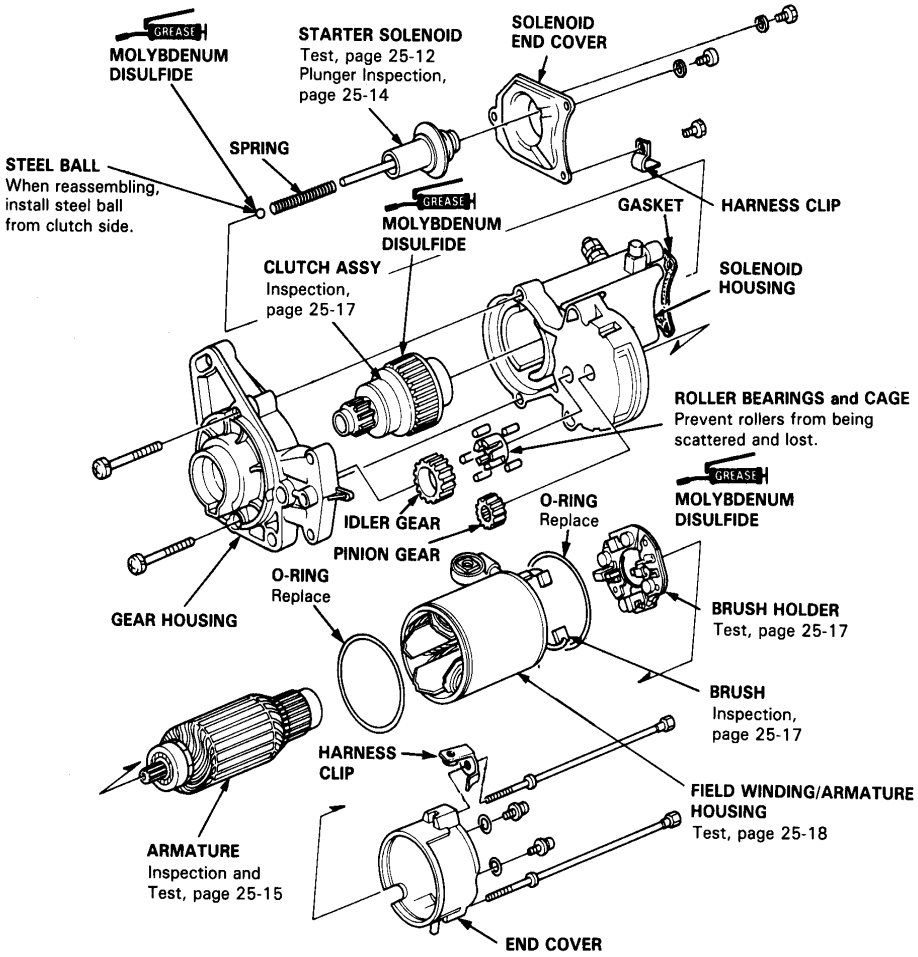

Engine Electrical

Starter Test

NOTE: The air temperature must be between 15 and 38°C (59 and 100°F) before testing.

Recommended Procedure:

Use a starter system tester.
Connect and operate the equipment in accordance with manufacturer's instructions.
Test and troubleshoot as described starting with step 2.

Alternate Procedure:

Use the following equipment:

- Ammeter, 0—400A
- Voltmeter, 0—20 volts (accurate within 0.1 volt)
- Tachometer 0—1200 rpm

1. Hook up voltmeter and ammeter as shown.

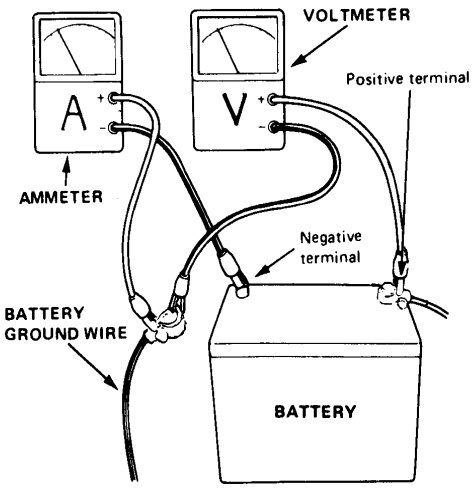

2. Disconnect the ignition coil secondary wire from the distributor, and ground it.

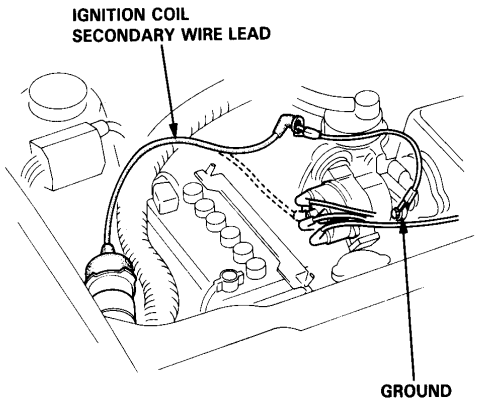

3. Check the starter engagement.
   Turn the ignition switch to III. The starter should crank the engine.

   - If the starter does not crank the engine, check the battery, the battery positive cable and ground, and the cable connections for looseness or corrosion.

   - Test again.
     If the starter still does not crank the engine, bypass the ignition switch circuit as follows: Unplug the connector (Black/White wire) from the starter. Connect the jumper wire from the battery positive (+) terminal to the solenoid terminal. The starter should crank the engine.

   – If the starter still does not crank the engine, remove the starter and diagnose its internal problems (see pages 25-12 through 25-19).

   – If the starter cranks the engine, check for an open wire in the black/white wire circuit between the starter and ignition switch, and connectors. Check the ignition switch. On cars with automatic transmission, check the NEUTRAL/BACK-UP switch and connectors.

4. Check for wear or damage.

   The starter should crank the engine smoothly and steadily.

   - If the starter engages, but cranks the engine erratically, remove the starter motor. Inspect the starter, drive gear, and flywheel ring gear for damage. Check the drive gear overrunning clutch for binding or slipping when the armature is rotated with the drive gear held. Replace the gears if damaged. See page 25-17.

5. Check cranking voltage and current draw.

   Voltage should be no less than specified below:

   0.8kw and 1.4kw: 8 volts
   1.0kw : 8.5 volts

   Current should be no greater than specified below:

   0.8kw: 200 amperes
   1.0kw: 230 amperes
   1.4kw: 350 amperes

   If voltage is too low, or current draw too high, check for:
   - Battery fully charged (see page 25-36).
   - Open circuit in starter armature commutator segments (see page 25-16).
   - Starter armature dragging.
   - Shorted armature winding (see page 25-16).
   - Excessive drag in engine.

6. Check cranking rpm.

   Engine speed during cranking should be approximately 400 rpm.

   If cranking rpm is too low, check for:
   - Loose battery or starter terminals.
   - Excessively worn starter brushes (see page 25-17).
   - Open circuit in commutator segments (see page 25-16).
   - Dirty or damaged helical spline on drive gear.
   - Defective drive gear overrunning clutch (see page 25-17).

7. Check the starter disengagement:

   Turn the ignition switch to III and release to II. The starter drive gear should disengage from the flywheel ring gear.

   If the drive gear hangs up on the flywheel, ring gear, check:
   - Solenoid plunger and switch for malfunciton.
   - Drive gear assembly for dirty or damaged overrunning clutch (see page 25-17).

Engine Electrical

Starter Solenoid Test

1. Check pull-in coil continuity between the solenoid terminal and any convenient ground. Coil is OK if there is continuity.

Nippon Denso 0.8 kw:

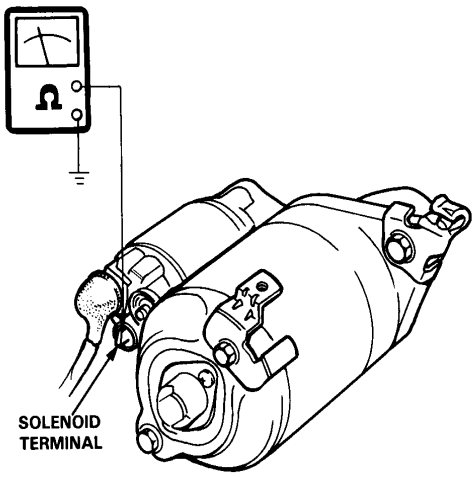

Hitachi 0.8 kw:

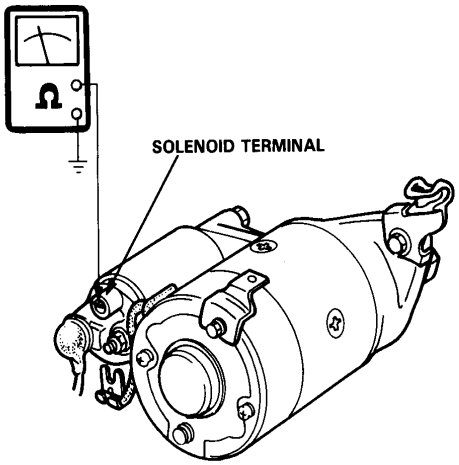

Nippon Denso 1.0 kw and 1.4 kw:

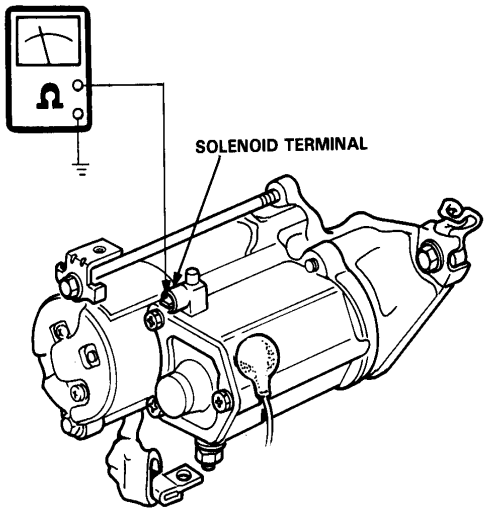

Mitsuba 1.0 kw and 1.4 kw:

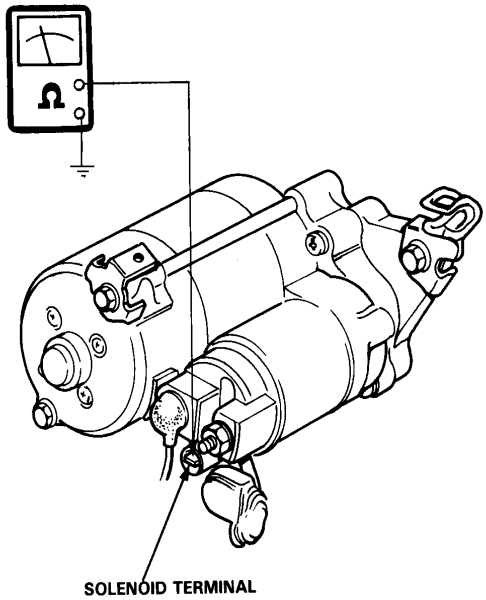

2. Check hold-in coil continuity between the solenoid terminal and the motor terminal on the solenoid. Coil is OK if there is continuity.

Nippon Denso 0.8 kw:

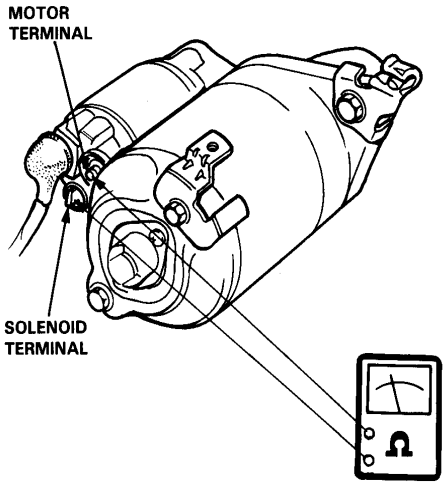

Hitachi 0.8 kw:

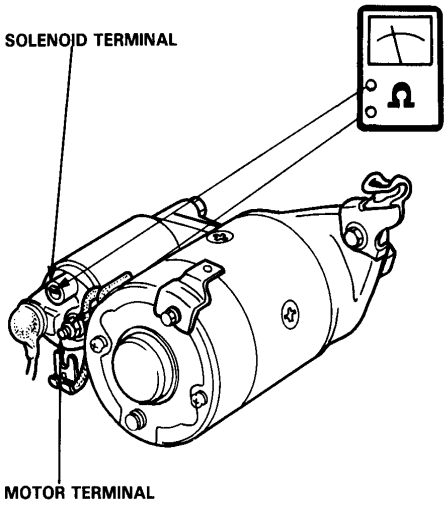

Nippon Denso 1.0 kw and 1.4 kw:

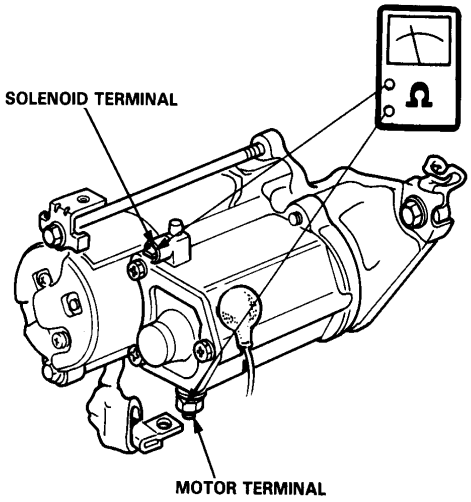

Mitsuba 1.0 kw and 1.4 kw:

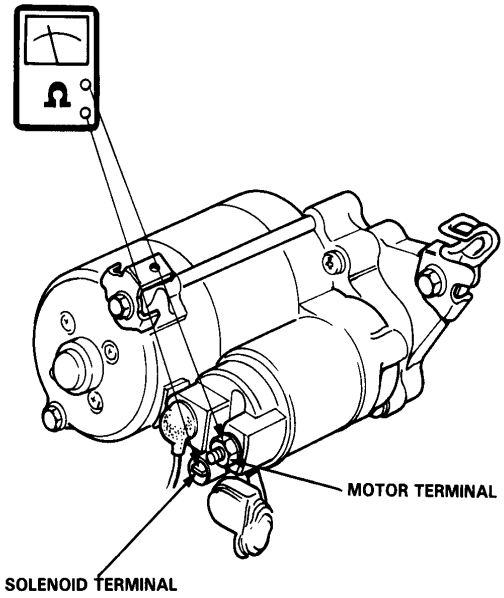

Engine Electrical

Starter Replacement

1. Disconnect both cables from the battery.
2. Disconnect the starter cable from the terminal on the starter motor.
3. Remove the engine wire harness from the harness clip on the starter motor.
4. Disconnect the solenoid wire from the terminal on the starter solenoid.
5. Remove two bolts holding the starter motor, and remove the starter motor.

Direct Type:

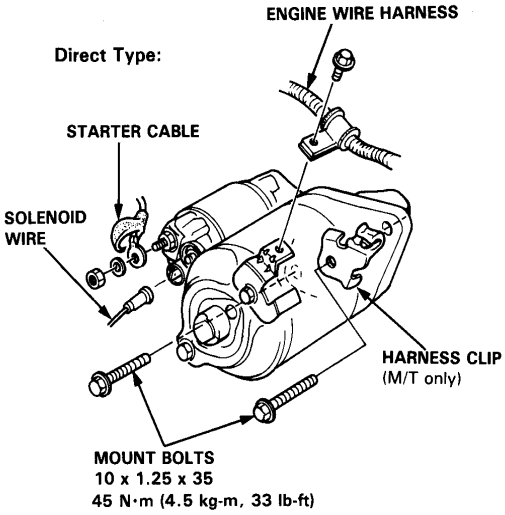

Reduction Type:

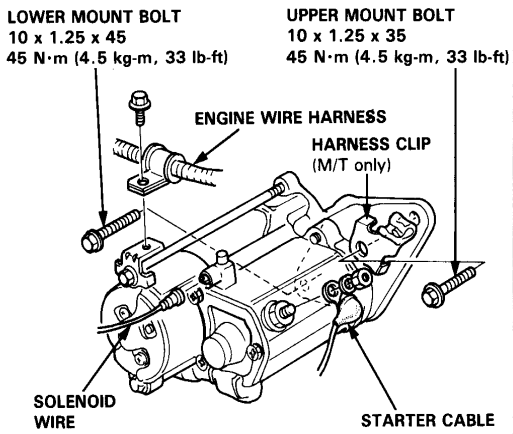

Solenoid Plunger Inspection (ND)

1. Remove three screws from the solenoid end cover.

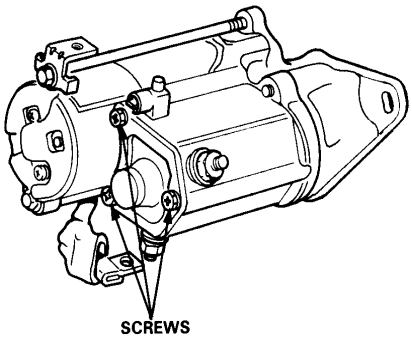

2. Check the contact points, and face of the starter solenoid plunger for burning, pitting or any other defects. If surfaces are rough, recondition with a strip of #500 or #600 sandpaper.

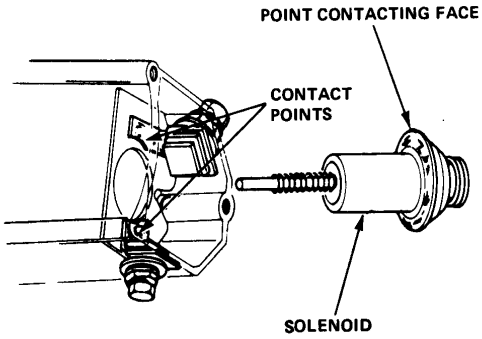

Armature Inspection and Test

1. Inspect armature for wear or damage due to contact with the field coil magnets.

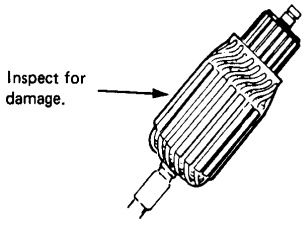

2. A dirty or burnt surface may be resurfaced with emery cloth or lathe within the following specifications.

Commutator Service Limits

Runout:
- ND (0.8 kw): Less than 0.3 mm (0.012 in.)
- Hitachi (0.8 kw): Less than 0.4 mm (0.016 in.)
- ND (1.0 kw and 1.4 kw) and Mitsuba (1.0 kw and 1.4 kw): Less than 0.05 mm (0.002 in.)

Diameter:
- ND (0.8 kw): Not less than 27.0 mm (1.06 in.)
- Hitachi (0.8 kw): Not less than 39 mm (1.54 in.)
- ND (1.0 kw and 1.4 kw): Not less than 29 mm (1.14 in.)
- Mitsuba (1.0 kw and 1.4 kw): Not less than 27.5 mm (1.08 in.)

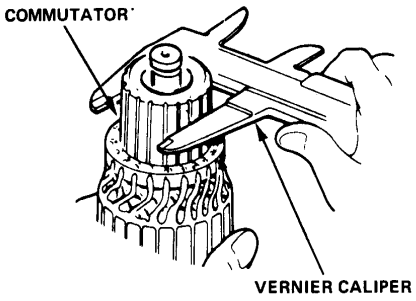

3. If the commutator runout and diameter are within limits, check the commutator for damage or for carbon dust or brass chips between the segments.

4. If surface is dirty, recondition it with a #500 or #600 sandpaper. Then, check mica depth. If necessary, undercut mica with a hacksaw blade to achieve proper depth as shown.

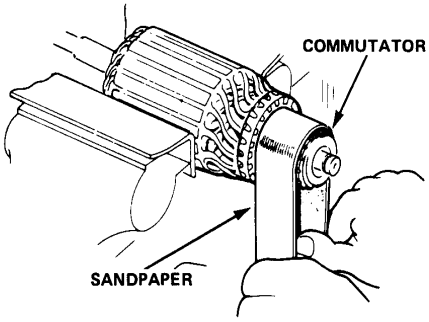

Commutator Mica Depth

Standard (New):
- ND and Hitachi: 0.5—0.8 mm (0.020—0.031 in.)
- Mitsuba: 0.4—0.5 mm (0.016—0.020 in.)

Service Limit:
- ND and Hitachi: 0.2 mm (0.008 in.)
- Mitsuba: 0.15 mm (0.006 in.)

(cont'd)

Engine Eledrial

Armature Inspection and Test (cont'd)

5. Place the armature on an armature tester. Hold a hacksaw blade on the armature core.

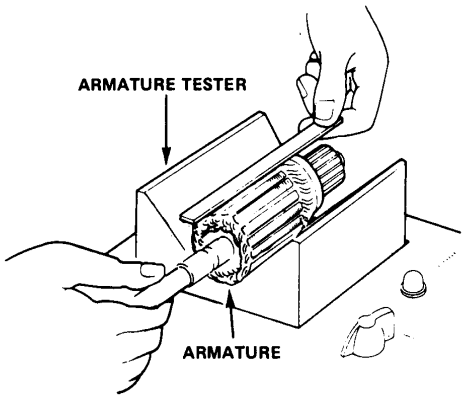

If the blade is attracted to the core or vibrates while core is turned, the armature is shorted. Replace the armature.

6. With an ohmmeter, check that no continuity exists between the commutator and armature coil core. If continuity exists, replace the armature.

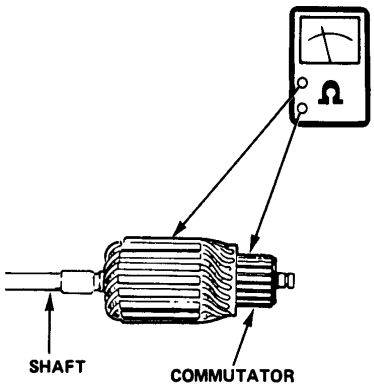

7. Check for continuity between each segment of the commutator. If an open circuit exists between any segment, replace the armature.

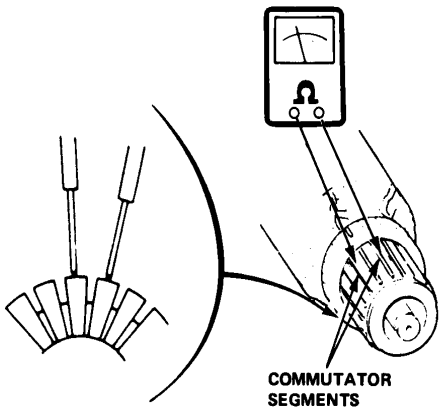

8. Check to see if there is any continuity between the commutator and armature shaft. If there is continuity, replace the armature.

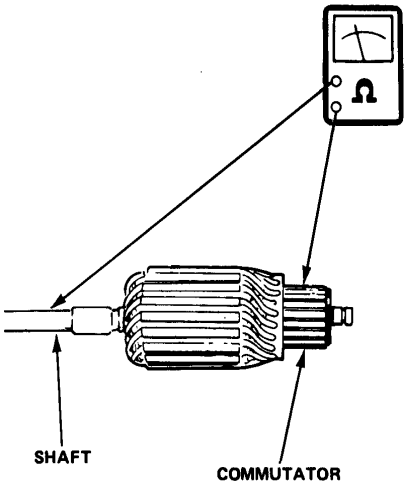

Overrunning Clutch Check

Move the overrunning clutch along the shaft.

If it doesn't move freely, or if the clutch slips when the armature is rotated while holding the drive gear, replace the clutch assembly.

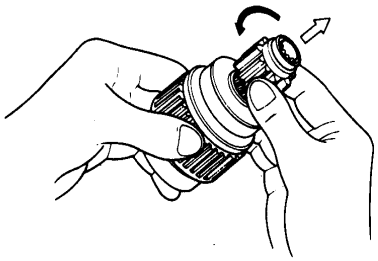

If the gear is worn or damaged, replace the overrunning clutch assembly; the gear is not available separately.

NOTE: Check condition of the flywheel or torque converter ring gear if the starter drive gear teeth are damaged.

Brush Holder Test

With an ohmmeter, check that no continuity exists between the positive (+) and negative (−) brush holder.

If continuity exists, replace the brush holder assembly.

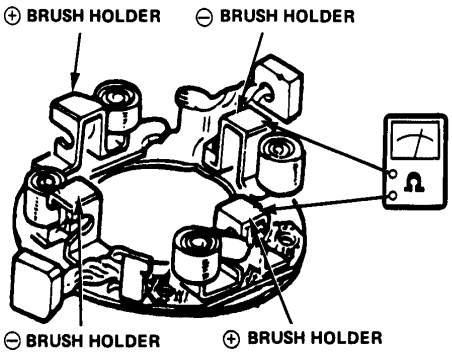

Brush Inspection

Measure brush length. If not within service limit, replace the armature housing and brush holder assembly.

Standard (New):
ND (0.8 kw): 15.5—16.5 mm (0.61—0.65 in.)
Hitachi (0.8 kw) and ND (1.4 kw): 14.5—15.5 mm (0.57—0.61 in.)
ND (1.0 kw): 12.5—13.5mm (0.49—0.53 in.)
Mitsuba 1.0 kw and 1.4 kw): 14.3—14.7 mm (0.56—0.58 in.)

Service Limit:
ND (0.8 kw): 10 mm (0.39 in.)
Hitachi (0.8 kw): 11 mm (0.43 in.)
ND (1.0 kw and 1.4 kw): 8.5 mm (0.33 in.)
Mitsuba (1.0 kw and 1.4 kw): 9.3 mm (0.37 in.)

NOTE: To seat new brushes after installing them in their holders, slip a strip #500 or #600 sandpaper, with the grit side up, over the commutator and smoothly rotate the armature. The contact surface of the brushes will be sanded to same contour as the commutator.

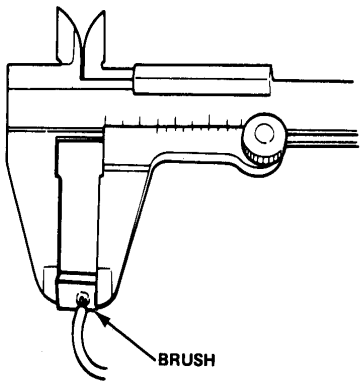

Engine Electrical

Starter Field Winding Test

1. Using an ohmmeter, check that continuity exists between the brushes.

   If no continuity, replace the armature housing.

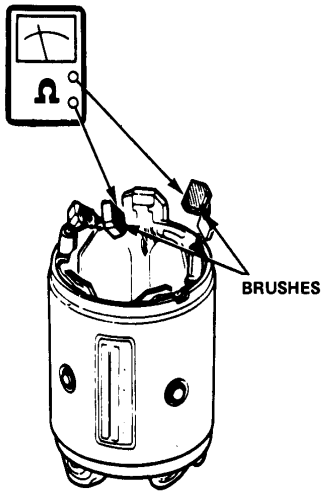

2. With an ohmmeter, check that no continuity exists between the field coil and armature housing.

   If continuity exists, replace the armature housing.

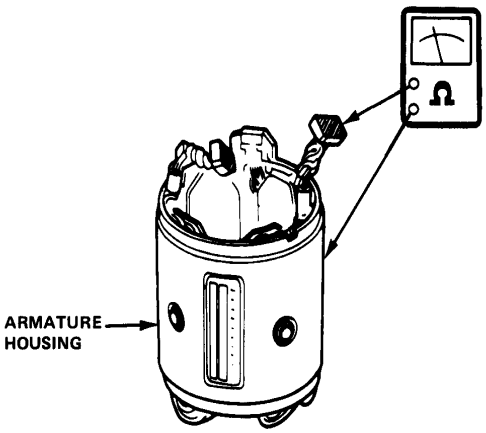

Starter Reassembly

Reassemble the starter in the reverse order of disassembly.

1. Pry back each brush spring with a screwdriver, then position the brush about halfway out of its holder, and release the spring to hold it there.

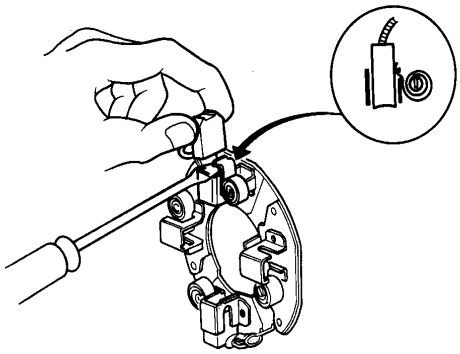

2. Install the armature in the housing. Next pry back each brush spring again and push the brush down until it seats against the commutator, then release the spring against the end of the brush.

3. For Hitachi (0.8 kw), install the spring as shown.

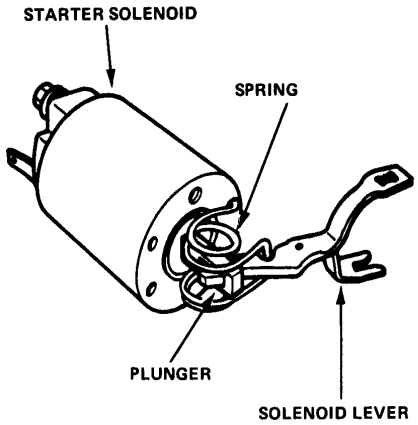

4. After assembling measure the clearance between the pinion stopper and the pinion with the clutch pushed out by the starter solenoid.

Nippon Denso (0.8 kw):

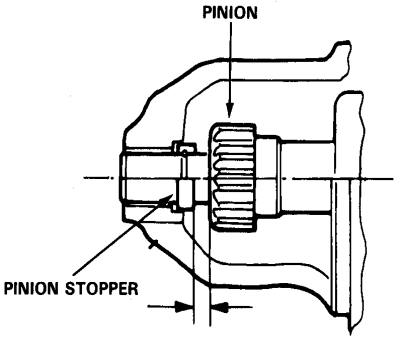

Specified Clearance: 0.1—4.0 mm (0.004—0.157 in.)

Hitachi (0.8 kw):

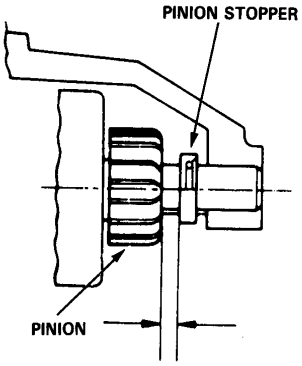

Specified Clearance: 0.3—2.5 mm (0.012—0.098 in.)

If out of the specifications, adjust by changing the number of washers used.

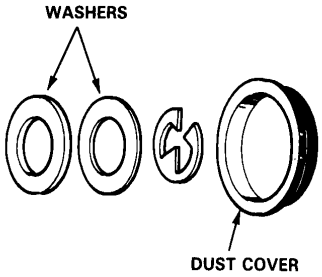

Ignition Wire Inspection and Test

CAUTION: Carefully remove the ignition wires by pulling on the rubber boots. Do not bend the wire or the conductor may be broken.

1. Check condition of the wire terminals. If any terminal is corroded, clean it, and if it is broken or distorted, replace the wire.

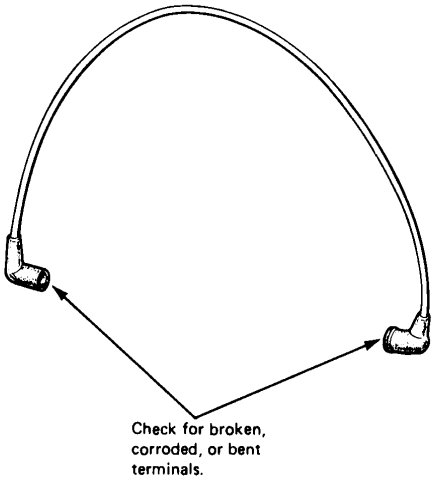

2. Connect ohmmeter probes and measure resistance.

Ignition Wire Resistance: 25,000 ohms maximum.

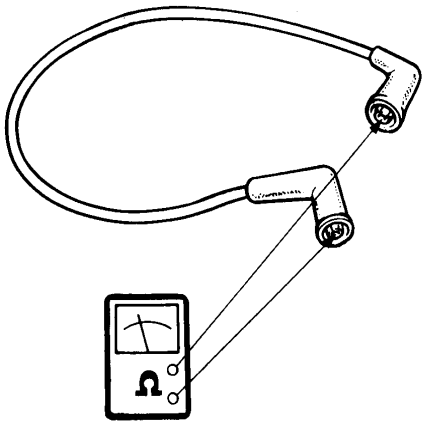

If resistance exceeds 25,000 ohms, replace the ignition wire.

Engine Electrical

Ignition Coil Test

1. With the ignition switch OFF, disconnect the primary connectors and the coil wire.

2. Using an ohmmeter, check the resistance between the terminals. Replace the coil if the resistance is not within specifications.

   NOTE: Resistance will vary with the coil temperature.

   Primary Winding Resistance (between the A and D terminals):
   1.2—1.5 ohms at 20° C (70° F)
   Secondary Winding Resistance (between the A and secondary winding terminals):
   11,074—11,526 ohms at 20°C (70°F)
   Resistance between the B and D terminals:
   Approx. 2,200 ohms at 20°C (70°F)

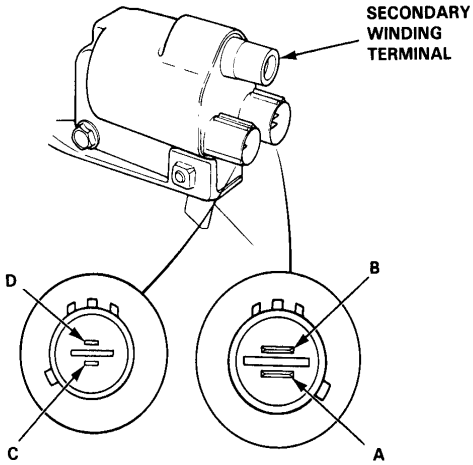

PRIMARY WINDING TERMINALS

3. Check for continuity between the A and C terminals. Replace the coil if there is no continuity.

Circuit Diagram

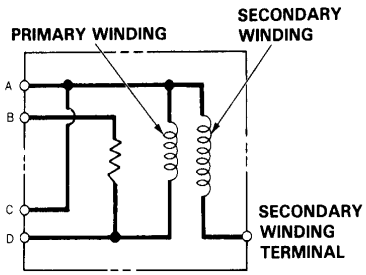

Radio Noise Condenser Capacity Test

Use a commercially available condenser tester.

Condenser Capacity: 0.47 ± 0.09 microfarads (μF)

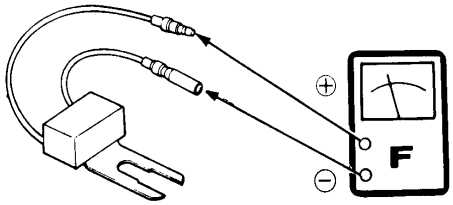

NOTE: The radio noise condenser is intended to reduce ignition noise; however, condenser failure may cause the engine to stop running.

Igniter Unit Test

Fuel-Injected Engine:

1. Remove the distributor hold-down bolt, then remove the distributor from the cylinder head.

2. Remove the igniter cover and pull out the igniter unit.

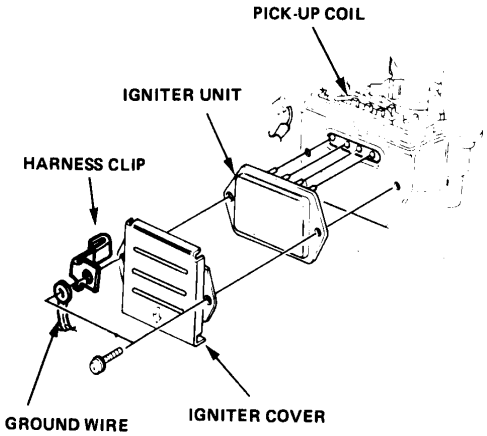

3. Check voltage between the Bu^1 terminal and body ground, then the Bl/Y terminal and body ground, with the ignition switch ON.
There should be battery voltage.

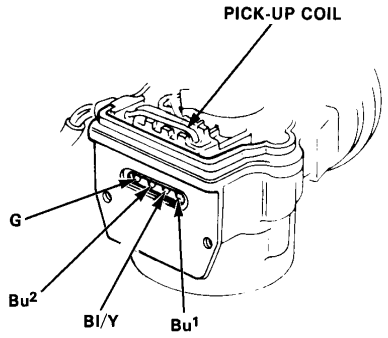

NOTE: Two different wires have the same color. They have been given a number suffix to distinguish them (for example Bu^1 and Bu^2 are not the same).

4. Measure resistance between the G and Bu^2 terminals on the pick-up coil. Replace the pick-up coil if the resistance is not within specifications.

NOTE: Resistance will vary with the coil temperature.

Pick-up Coil Resistance:
750 ± 100 ohms at 20°C (70°F)

5. Check for continuity in both directions between the A and B terminals on the igniter output. (RX100 scale).
There should be continuity in only one direction.

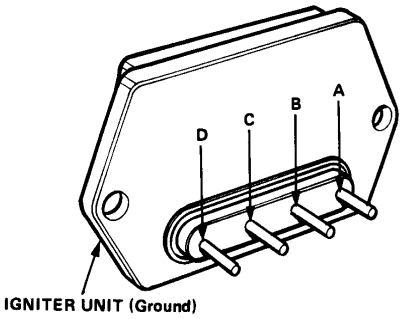

6. Connect the ohmmeter positive probe to the D terminal and negative to the igniter unit (ground), then measure resistance of the igniter input.

NOTE: Resistance will vary with the unit temperature.

Igniter Input Resistance:

500±50 ohms at 20°C (70°F)

NOTE: When installing the igniter, pack silicone grease in the connector housing.

(cont'd)

Engine Electrical

Igniter Unit Test (cont'd)

Carbureted Engine:

1. Disconnect the lead wires from the igniter unit. Check voltage between the blue wire and body ground, then the black/yellow wire and body ground, with the ignition switch ON. There should be battery voltage.

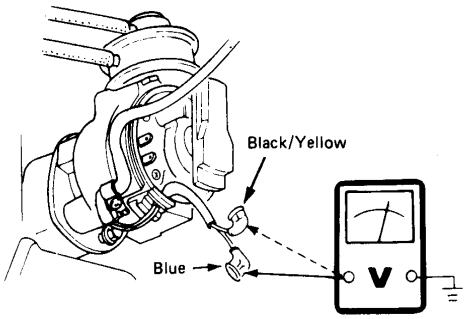

2. With the lead wires disconnected, check continuity between the igniter unit terminals using an ohmmeter. (R x 100 scale)
   There should be no continuity with a positive probe to the black/yellow wire terminal and a negative probe to the blue wire terminal.
   There should be continuity with a positive probe to the blue wire terminal and a negative probe to the black/ yellow wire terminal.

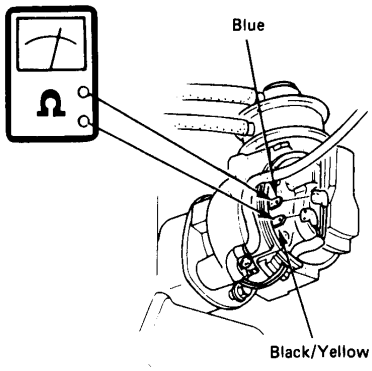

Distributor Top End Inspection

1. Check to be sure that the air gaps are equal.
2. If necessary, back off the screws and move the stator as required to adjust.

Carbureted Engine:

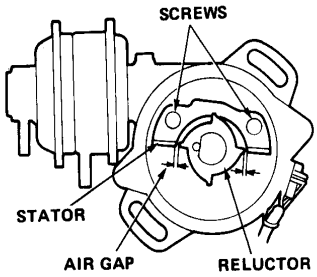

Fuel-Injected Engine:

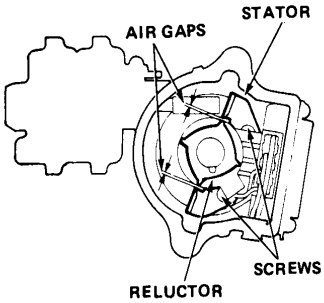

3. Check for rough or pitted rotor and cap terminals.
4. Scrape or file off the carbon deposits.
   Smooth the rotor terminal with an oil stone or #600 sandpaper if rough.
5. Apply a thin coat of silicone grease to the tip of the rotor.

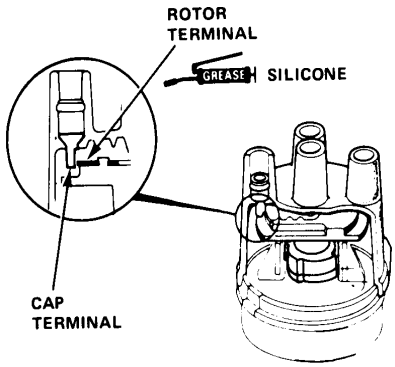

Distributor Removal

Carbureted Engine:

1. Disconnect the spark plug wires.
2. Disconnect the hoses from the advance diaphragm.
3. Disconnect the coil wire and the primary lead wire from the ignition coil and condenser.
4. Remove the distributor hold-down bolts and remove the distributor from the cylinder head.

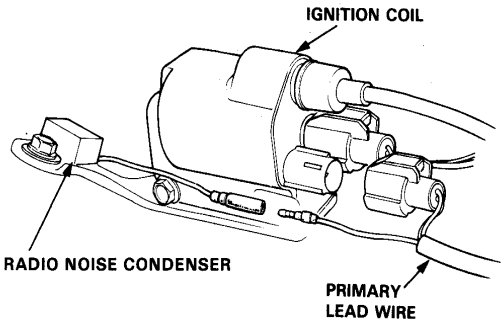

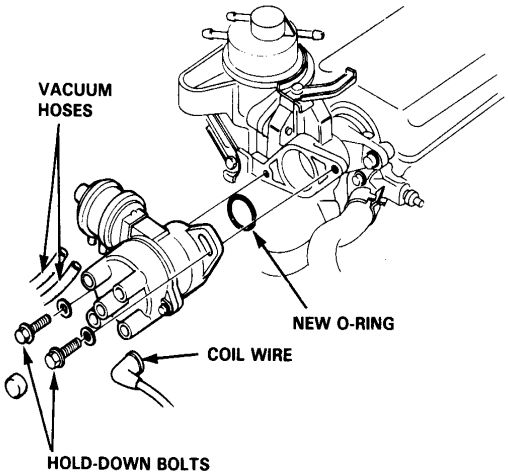

Fuel-Injected Engine:

1. Disconnect the coil wire and the primary lead wire from the ignition coil and condenser.

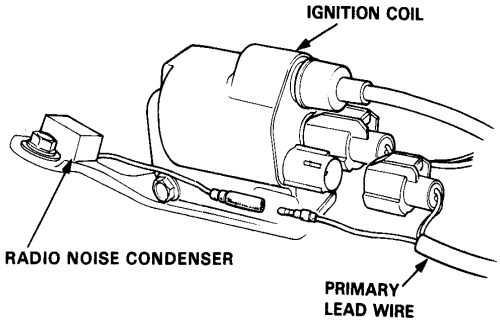

2. Disconnect the spark plug wires.
3. Disconnect the hoses from the advance diaphragm.
4. Disconnect the 4P connector from the crank angle sensor on the distributor.

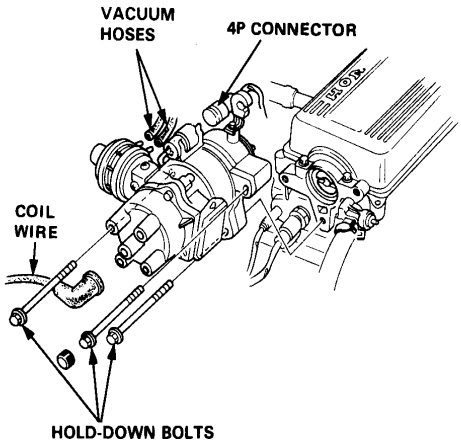

5. Remove the distributor hold-down bolts and remove the distributor from the cylinder head.

Engine Electrical

Distributor Installation

Carbureted Engine:

1. Install a new O-ring on the distributor housing.
2. Slip the distributor into position.

   NOTE: The lugs on the end of the distributor and its mating grooves in the camshaft end are both offset to eliminate the possibility of installing the distributor 180° out of time.

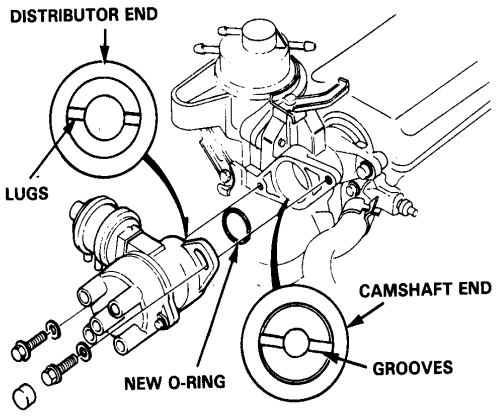

3. Install the adjusting bolts and tighten temporarily. Final tightening should be done after the timing has been adjusted.
4. Connect the hoses to the advance diaphragm, and the primary lead wires and coil wire to the ignition coil as shown.

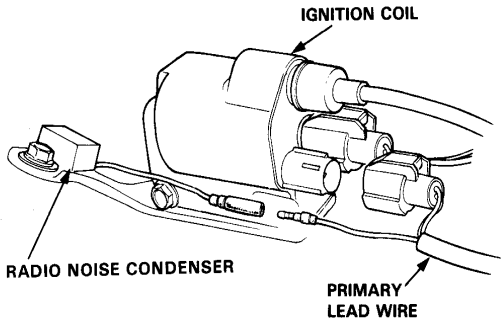

5. Connect the plug wires as shown.

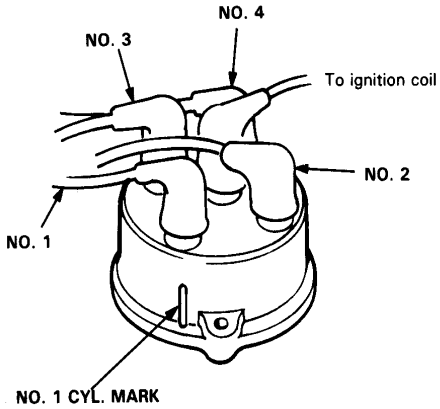

6. Set the timing with a timing light as shown on page 25-32.

Fuel-Injected Engine:

1. Install a new O-ring on the distributor housing.

2. Slip the distributor into position.

   NOTE: The lugs on the end of the distributor and its mating grooves in the camshaft end are both offset to eliminate the possibility of installing the distributor 180° out of time.

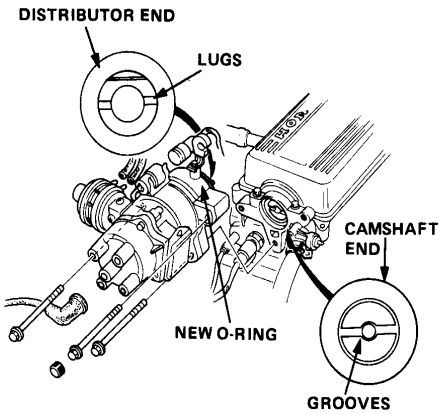

3. Install the adjusting bolts and tighten temporarily. Final tightening should be done after the timing has been adjusted.

4. Connect the hoses to the advance diaphragm, and the 4P connector to the connector of the crank angle sensor.

5. Connect the primary lead wires and coil wire to the ignition coil as shown.

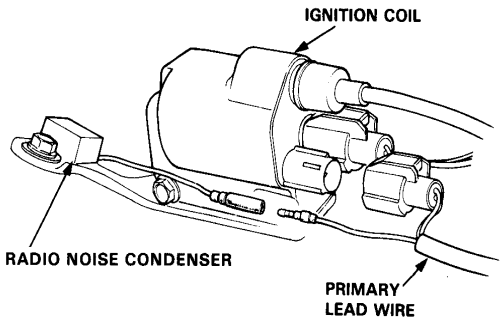

6. Connect the plug wires as shown.

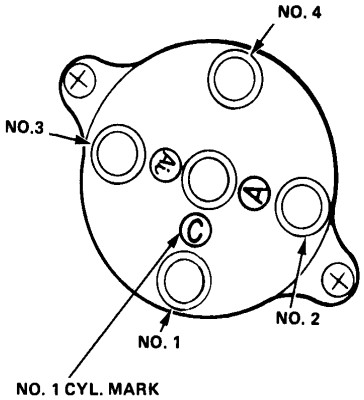

7. Set the timing with a timing light as shown on page 25-32.

Engine Electrical

Reluctor Replacement

1. Carefully pry up the reluctor by using two screwdrivers as shown. Do not damage the reluctor and stator.

Carbureted Engine:

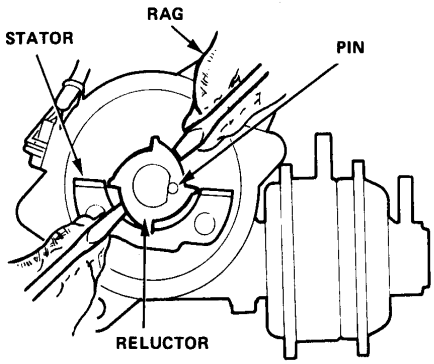

Fuel-Injected Engine:

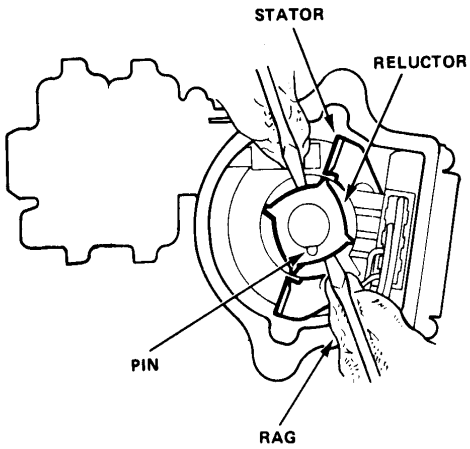

2. When installing the reluctor, be sure to drive in the pin with its gap away from the shaft.

   NOTE: The number or letter manufacturing code on the reluctor must always face up.

Advance Diaphragm Replacement

1. Remove the advance diaphragm mount screws.
2. Disconnect the diaphragm arm then pull the diaphragm out of the distributor.

Carbureted Engine:

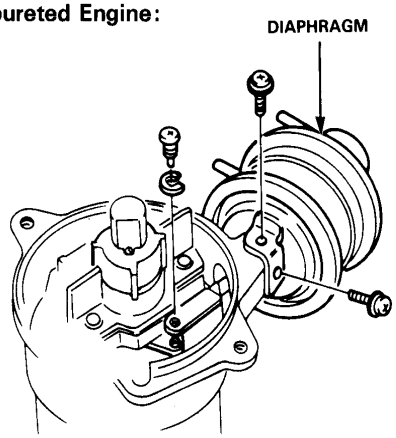

Fuel-Injected Engine:

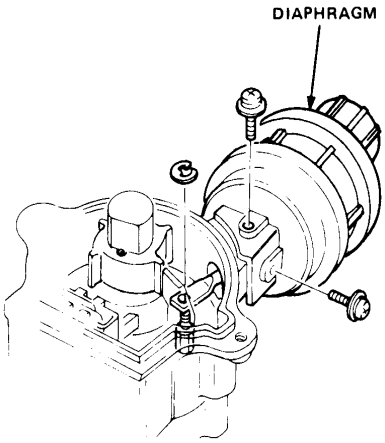

Igniter Unit Replacement

Fuel-Injected Engine Only:

Remove the igniter cover and pull out igniter unit.

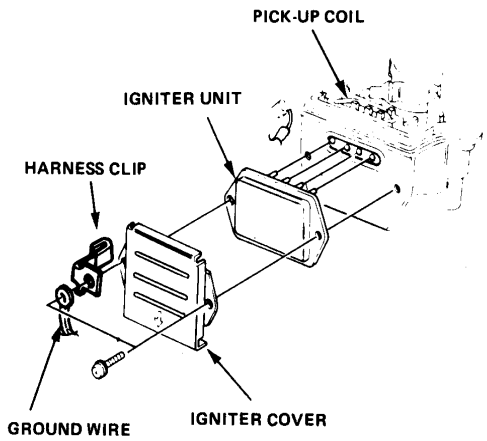

Pick-up Coil Replacement

Fuel-Injected Engine Only:

1. Remove the igniter unit and the reluctor.
2. Pull the pick-up coil out from the rotor shaft by removing the screws.

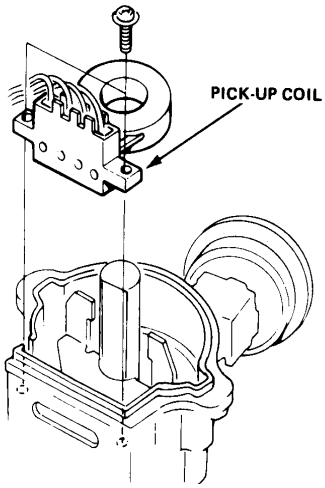

Distributor Shaft Removal

Carbureted Engine:

1. Slide off the pin retainer being careful not to stretch it.
2. Remove the roll pin.

   NOTE: Save the thrust washer for later use.

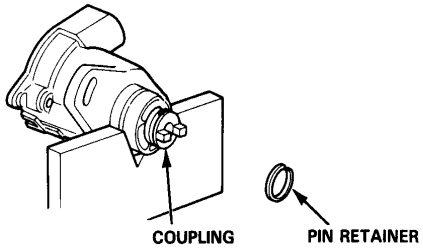

3. Remove the shaft and coupling from the housing and replace parts as necessary.

Fuel-Injected Engine:

1. Slide off the pin retainer being careful not to stretch it.
2. Separate the coupling from the shaft by removing the roll pis.

   NOTE: Save the thrust washer for later use.

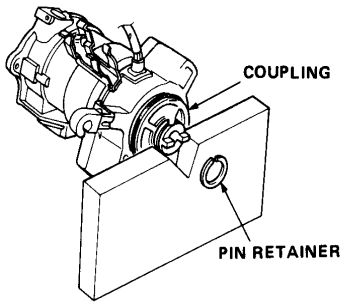

(cont'd)

Engine Electrical

Distributer Shaft Removal (cont'd)

3. Separate the sensor housing from the distributor housing by removing the 3 screws.

   NOTE: Do not remove the sensors from the housing.

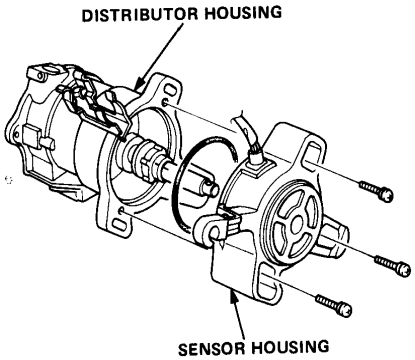

4. Remove the sensor rotor's roll pin after scribing an alignment mark on the rotor and shaft.

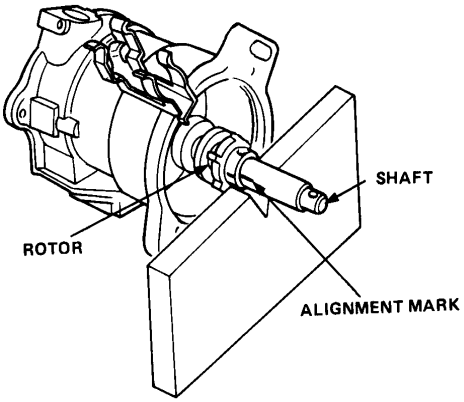

5. Carefully pry up the rotor by using two screwdrivers. Do not damage the rotor.

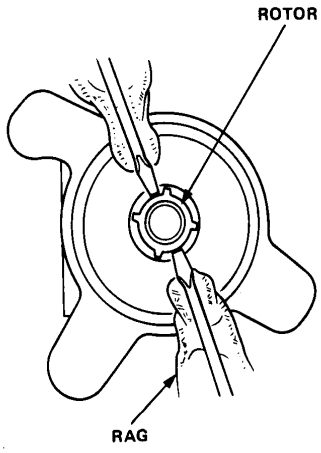

6. Remove the shaft from the housing and replace parts as necessary.

Distributor Shaft Installation

Install the distributor shaft in the reverse order of removal.

Carbureted Engine:

1. Install the rotor, then turn it so that it faces in the direction shown (toward the No. 1 cylinder mark on the cap).

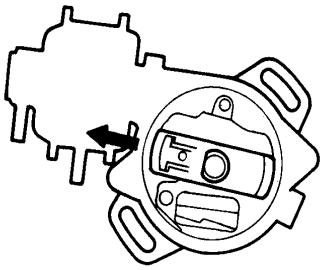

2. Set the thrust washer and coupling on the shaft.
3. Check that the rotor is still pointing toward No. 1 cylinder, then align the index mark on the housing with the index mark on the coupling.
   Drive in a new pin and secure it with the pin retainer.

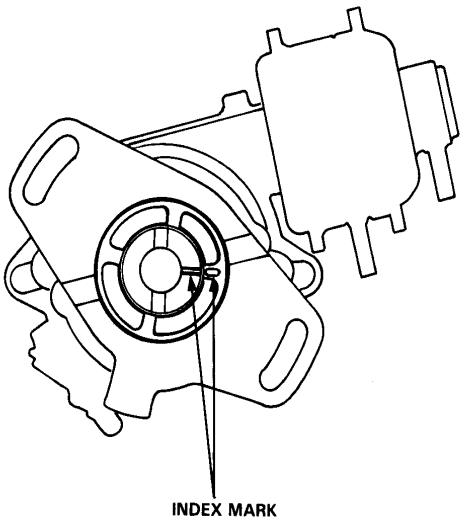

Fuel-Injected Engine:

1. Install the sensor rotor on the shaft, and align it with the mark on the shaft. Drive in a new pin. Assemble the distributor and sensor housings.

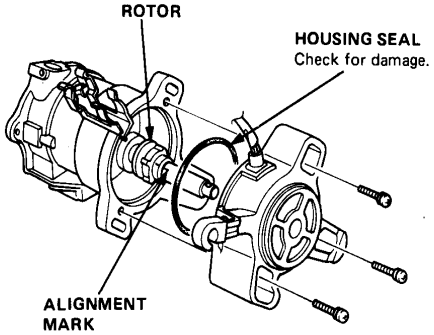

2. Install the rotor, then turn it so that it faces in the direction shown (toward the No. 1 cylinder mark on the cap).

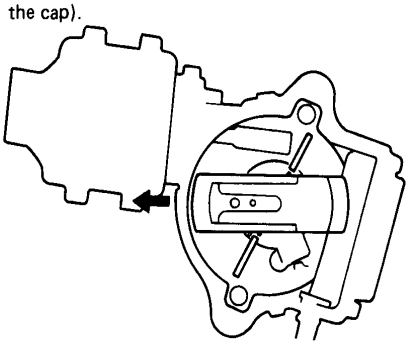

3. Set the thrust washer and coupling on the shaft.
4. Check that the rotor is still pointing toward No. 1 cylinder, then align the index mark on the housing with the index mark on the coupling.
   Drive in a new pin and secure it with the pin retainer.

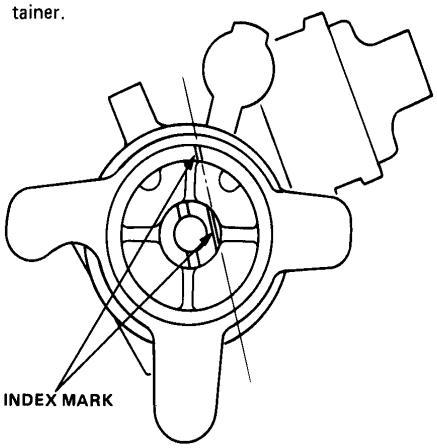

Engine Electrical

Distributor Overhaul

Carbureted Engine:

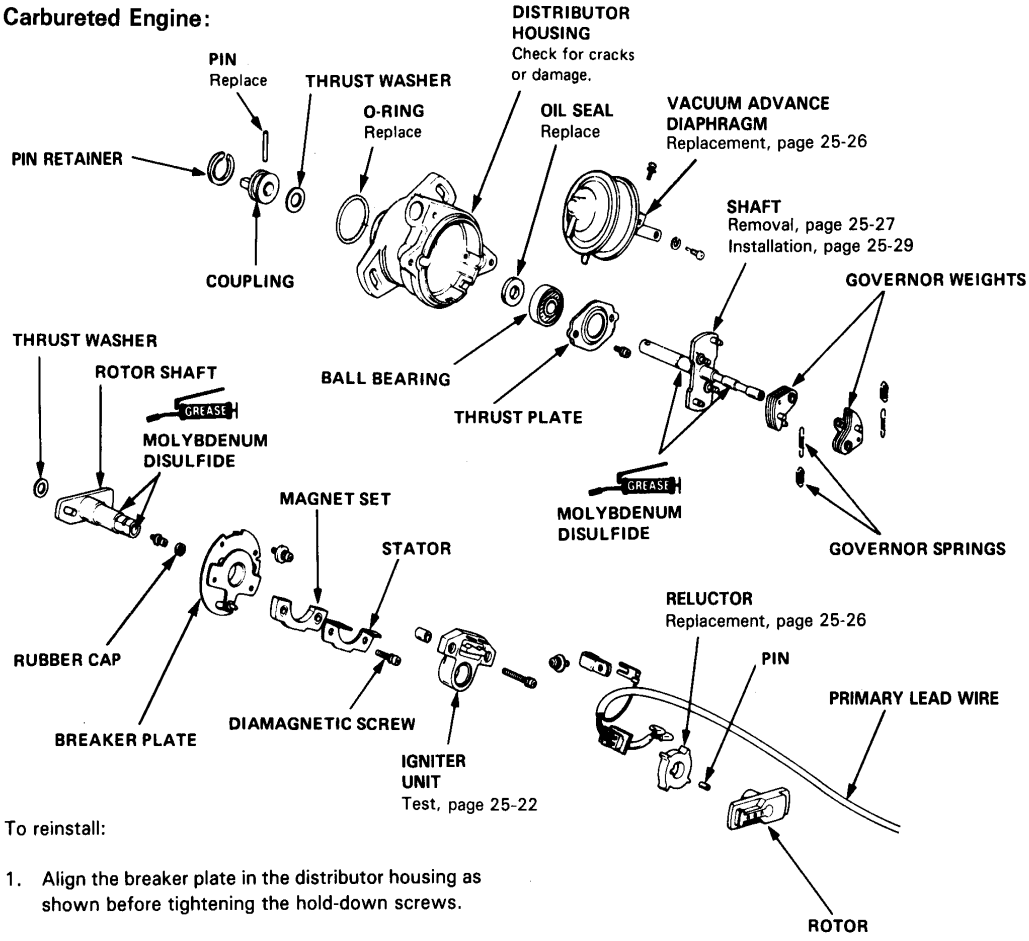

To reinstall:

1. Align the breaker plate in the distributor housing as shown before tightening the hold-down screws.

2. Check that the upper plate moves freely. Be sure the diaphragm arm attachment pin does not rotate past the end of the slot in the lower plate. If it does, adjust the range of free travel by forcibly rotating the plate past its limit in the opposite direction, then recheck.

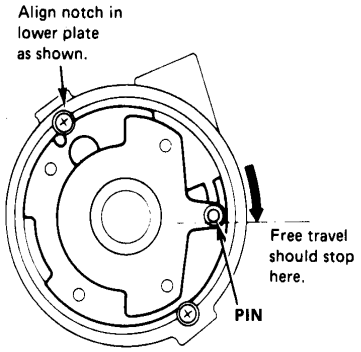

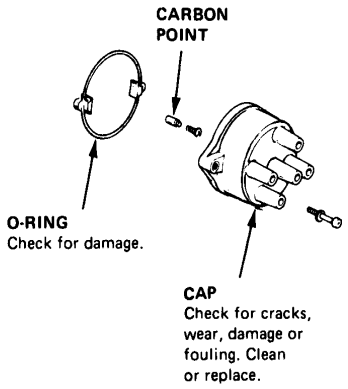

Fuel-Injected Engine:

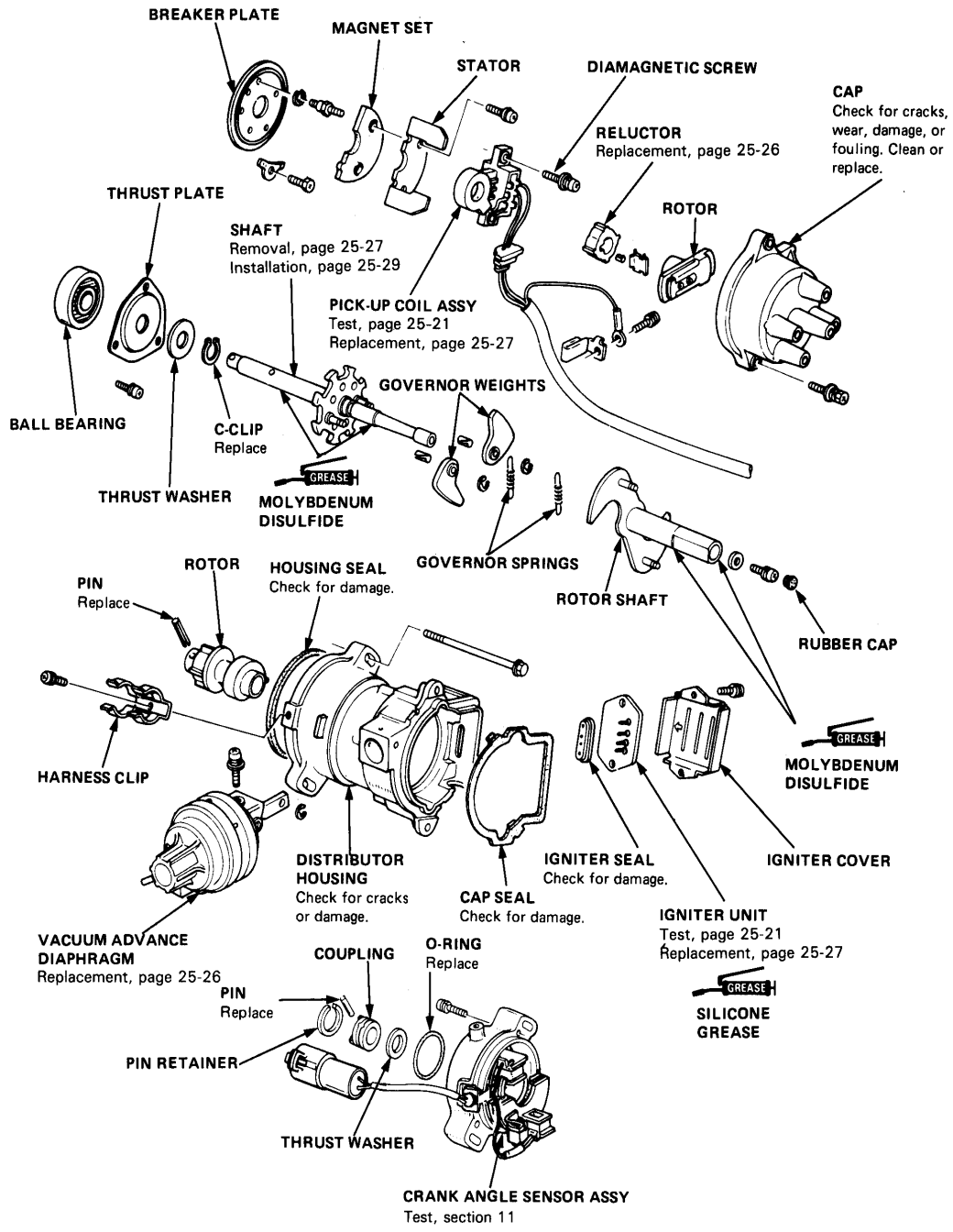

Engine Electrical

Ignition Timing Inspection and Setting

1. Start the engine and allow it to warm up (cooling fan comes on).

2. Varify vacuum sourse by disconnecting the vacuum hoses from the vacuum advance diaphragm, and while the engine is at idle, check each hose for vacuum and plug the hoses.
   - The inside hose (#2) should not have vacuum.
   - The outside hose (#5 for Fuel-injected engine or #2 for Carbureted engine) should not have vacuum.

   If vacuum is not as specified, see Timing Control System (see section 12.)

3. Reconnect vacuum hoses and connect timing light to the engine. While the engine is at idle, point a timing light toward the flywheel (for M/T), or the drive plate (for A/T).

   If ignition timing is not within specifications, varity the integrity of the vacuum advance diaphragms (see page 25—34).

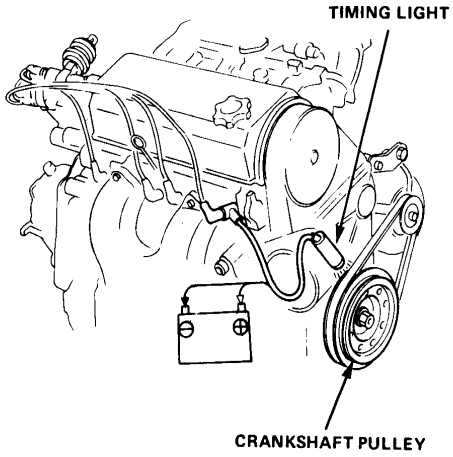

4. Adjust ignition timing, if necessary, to the following specifications:

Ignition Timing

Carbureted Engine:

1300:

14°±2° BTDC (Red) at idle in neutral.

1500:

Manual	:	**20° (15°) ±2° BTDC (Red) at idle in neutral.**
Automatic	:	**15°±2° (*17°±2°) BTDC (Red) at idle in gear.**

( ) Wagon 4WD
*** with P/S**

Fuel-Injected Engine:

49ST and HI ALT:		**16° ± 2° BTDC (Red) at idle in neutral.**
CAL	:	**12° ± 2° BTDC (Red) at idle in neutral.**

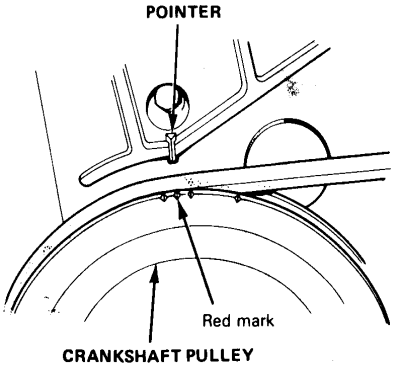

5. Loosen the distributor adjusting bolts, and turn the distributor housing counterclockwise to advance timing or clockwise to retard timing.

Carbureted Engine:

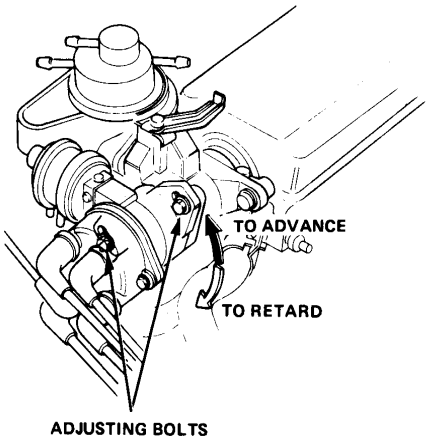

Fuel-Injected Engine:

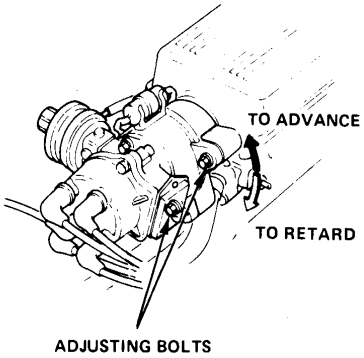

6. Tighten the adjusting bolts.

7. Recheck the timing and idle speed.

8. Disconnect the outside vacuum hose (#5 or #2) from the diaphragm and apply vacuum (more than 500 mmHg, 20 in.Hg), to the outsdie diaphragm with a vacuum pump.
The timing mark (Red) should advance an additional 4°.

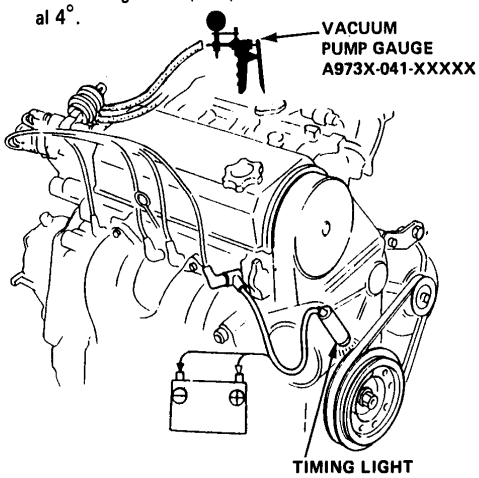

9. Disconnect the vacuum hoses from the vacuum advance diaphragm and pinch the end of the hoses using the fuel line clamps, 07614-0050100.
The timing should be 4° BTDC.

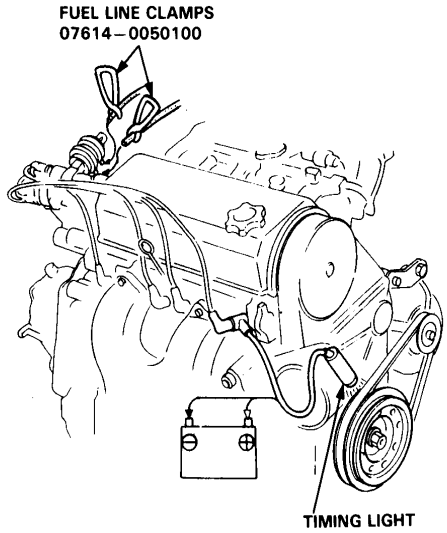

10. If advance is not as specified, check the ignition timing controls (see section 12) and the distributor advance mechanism.

Engine Electrical

Advance Diaphragm Inspection

1. Connect a vacuum pump to the advance diaphragm as shown.
2. Remove the distributor cap.

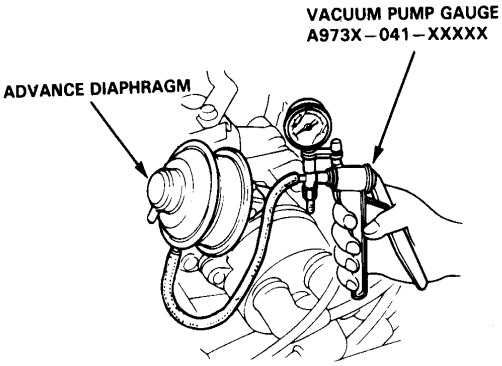

3. When vacuum (more than 500 mmHg, 20 in Hg) is applied to the diaphragm, the stator should turn counterclockwise and stay. If the startor does not turn or stay, replace the diaphragm.

   When vacuum is released, the stator should return. If the stator does not return, replace the diaphragm.

Spark Plug Inspection

1. Inspect the electrodes and ceramic insulator for:
   - Improper gap
   - Oil-fouling
   - Carbon deposits
   - Cracked center electrode insulator

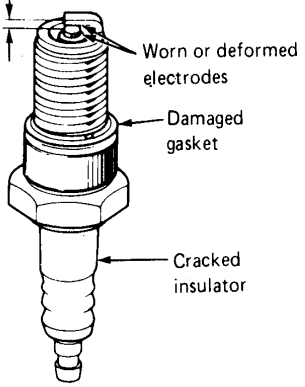

Burned or worn electrodes may be caused by:
- Lean fuel mixture
- Advanced ignition timing
- Loose spark plug
- Incorrect heat range plug

Fouled plug may be caused by:
- Rich fuel mixture
- Retarded ignition timing
- Oil in combustion chamber
- Incorrect spark plug gap

NOTE: Plugs removed from Honda CVCC engines may have more carbon build-up than plugs from conventional engines, as though the fuel mixture is too rich. This is a normal condition because the spark plug ignites the rich mixture supplied to the pre-combustion chamber.

2. Clean the electrodes with contact cleaner and compressed air. Clean between the outer shell and center insulator with a stiff wire as shown. Clean plug threads with a wire brush.

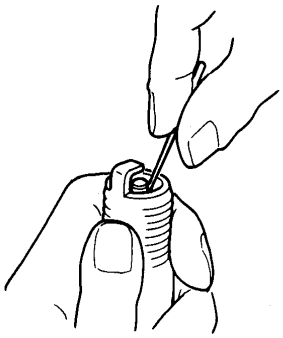

3. Replace the plug if the center electrode is rounded as shown below.

Carbureted Engine:

BUR4EB-11 (NGK) W14EKR-S11 (ND)	For all normal driving.
BUR5EB-11 (NGK) BUR6EB-11 (NGK) BUR7EB-11 (NGK) W16EKR-S11 (ND) W20EKR-S11 (ND) W22EKR-S11 (ND)	For hot climates or continuous high speed driving.

Fuel-Injected Engine:

BPR6EY-11 (NGK) W20EXR-S11 (ND)	For all normal driving.
BPR5EY-11 (NGK) W16EXR-U11 (ND)	For cold climates.
BPR7EY-11 (NGK) W22EXR-U11 (ND)	For hot climates or continuous high speed driving.

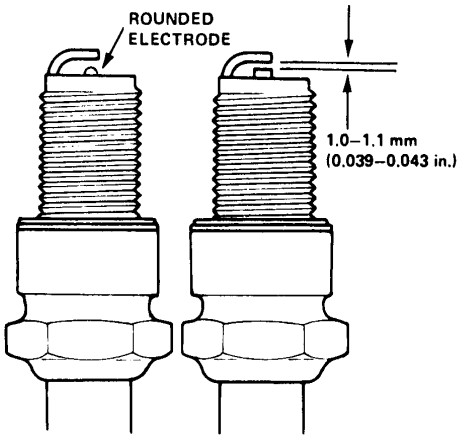

4. Adjust the gap with a suitable gapping tool.

   Electrode Gap: 1.0—1.1 mm (0.039—0.043 in.)

5. Screw the plugs into the cylinder head finger tight, then torque them to 18 N·m (1.8 kg-m, 13 lb-ft).

   NOTE: Apply a small quantity of anti-seize compound to the plug threads before installing.

Engine Electrical

Battery Inspection and Charging

Inspection

1. Check the battery case for loose parts, cracked case or top. Inspect cells for sulfation. Replace if damaged or sulfated.

2. Check the battery electrolyte level.

   Conventional Battery:
   Check the electrolyte level in each cell. If it's low, add distilled water until the electrolyte rises to the UPPER mark.

   Sealed Battery:
   Check the electrolyte level using the UPPER and LOWER marks on the side of the case, or indicator on the top. If the level is at or below the LOWER mark, or indicator is red, add electrolyte.

   Yuasa, Panasonic or Furukawa:
   Peel off the strip of tape over the caps, then remove the caps and add electrolyte until the level rises to the UPPER mark or indicator turns blue (see NOTE in step 3).

   Delco or HONDA:
   Electrolyte cannot be added because these batteries are permanently sealed.

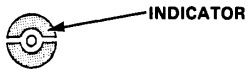

CAUTION: Battery electrolyte is a sulphuric acid solution. Do not allow it to contact painted surfaces, clothing or skin. If it does, rinse with water immediately to minimize the damage.
Do not overfill the battery.

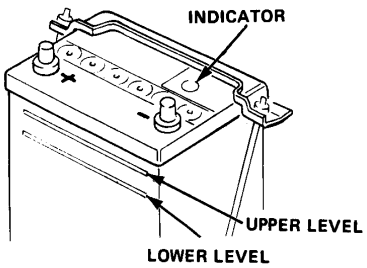

3. Check the electrolyte specific gravity.

   - Use a hydrometer and the correct specific gravity range for your temperature.
     – If the reading is at, or below, the "Needs charging" level, the battery must be charged.

Variation of Specific Gravity with Temperature

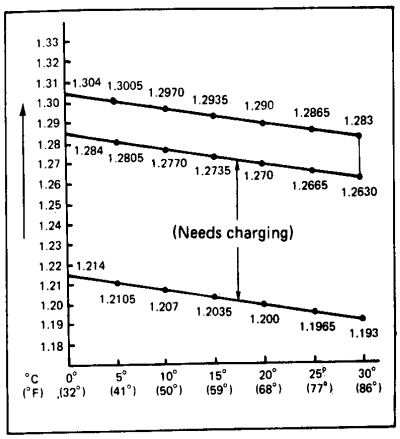

NOTE: On a sealed battery, check the specific gravity of the electrolyte by looking at the indicator on the top of the battery. Charge the battery if the indicator is white.

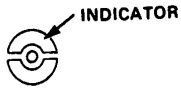

Charging

4. Charge at 10% of the ampere-hour rating until the battery specific gravity is at least 1.250.

SLOW CHARGE PROCEDURE

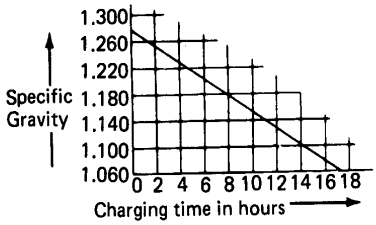

WARNING Keep sparks, flames and cigarettes away while charging battery.

5. Keep the battery and terminals clean. If necessary, brush with baking-soda solution and flush with clean, lukewarm water. Check for loose terminal clamps.

6. If clamps become corroded inside, clean out with a wire brush or coarse emery cloth.

   NOTE: Coat terminals lightly with petroleum jelly to retard corrosion. Baking soda may be mixed with the jelly for additional protection against acid build-up.

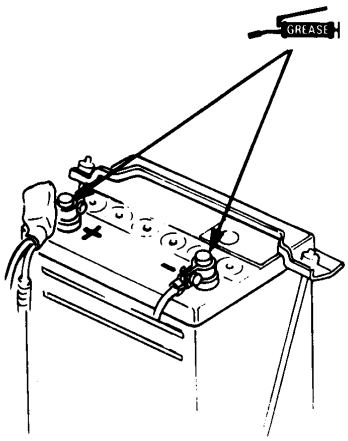

Charge Warning Light Test

NOTE: Before testing, check the wire harness connections and alternator belt tension.

1. Turn the ignition switch on. The charge warning light should come on.
   If it does not come on, unplug the voltage regulator connector and short the pin of the white/blue wire to ground.

   - If the warning light still does not come on, check the fuse, connectors (main wire harness, engine wire harness, dashboard wire harness and warning light panel) and related wires for an open circuit. Check the bulb, and replace it if burned out.

2. Start the engine and let it idle. The charge warning light should go off. If it stays on all the time, check the "alternator sensor" fuse (located in the underhood fuse box), and its wires.
   If the fuse and wires are OK, check alternator output.

Engine Electrical

Alternator Output Test

1. With the engine off, disconnect the white wire from terminal B on the alternator.

2. Hook up an ammeter (60 amp capacity or higher) at the alternator as shown.

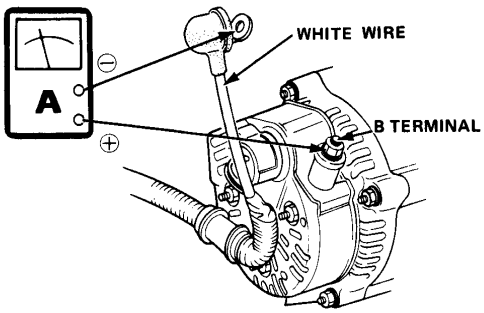

3. Hook up a voltmeter at the battery as shown.

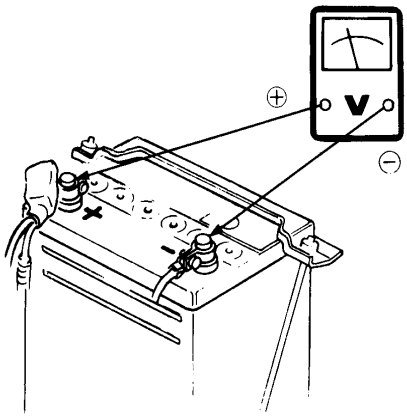

4. Start the engine.

   CAUTION: Don't let the voltage reading at the battery exceed 19 volts. If it does, shut the engine off, and then replace the voltage regulator.

5. Turn on:
   - Headlight switch (high beam).
   - Rear window defroster switch.
   - Heater blower switch (HI).

6. Check the alternator output:
   If it's within the output curve shown, the alternator is OK.
   If it's not, this is an indication that the stator coil is open. Repair or replace the alternator as necessary.

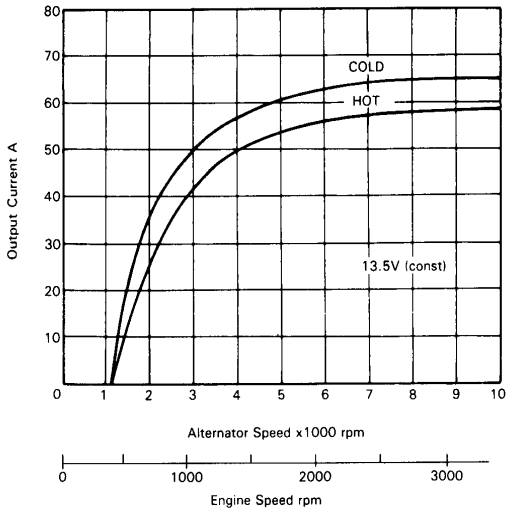

Alternator Replacement

1. Disconnect the ground cable from the battery negative post (−).
2. Disconnect the engine wire harness connector from the alternator, and remove the terminal nut.

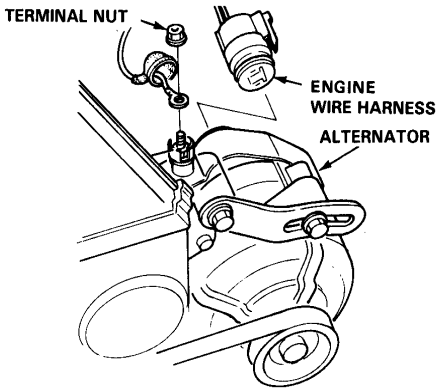

3. Remove the alternator adjusting bolt and alternator nut, then remove the alternator belt from the alternator pulley.
4. Remove the alternator bolt and the alternator.
5. If necessary, remove the mount bracket bolts, and the upper and lower mount brackets.

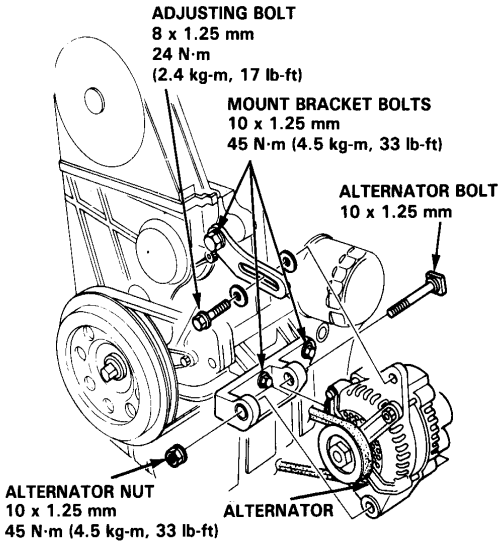

6. Adjust the alternator belt tension after installing.

Alternator Belt Adjustment

1. Apply a force of 98N (10 kg, 22 lb) and measure the deflection between the alternator and the crankshaft pulley.

   Deflection: 7—10 mm (0.28—0.39 in.)

   NOTE: On a brand-new belt, the deflection should be 4—6.5 mm (0.16—0.26 in.) when first measured.

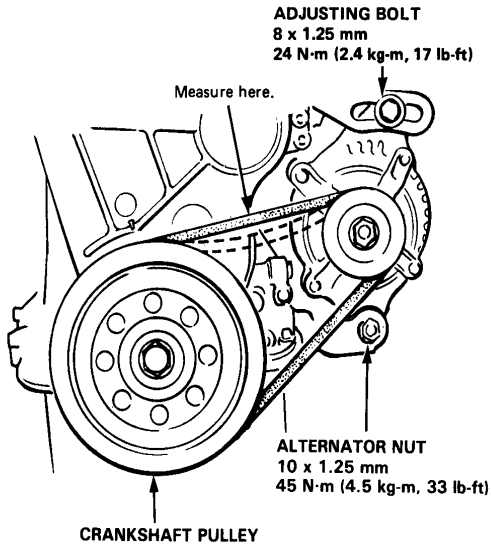

2. Loosen the alternator adjusting bolt and nut.
3. Move the alternator to obtain the proper belt tension and retighten the bolt and nut.
4. Recheck the deflection of the belt.

Engine Electrical

Alternator Overhaul

NOTE: It is only necessary to separate the pulley, drive end housing and rotor when the front bearing needs replacement.

To remove the pulley and rotor, use 10 mm and 22 mm box wrenches to loosen the pulley lock nut. Use an impact wrench to remove the nut if necessary.

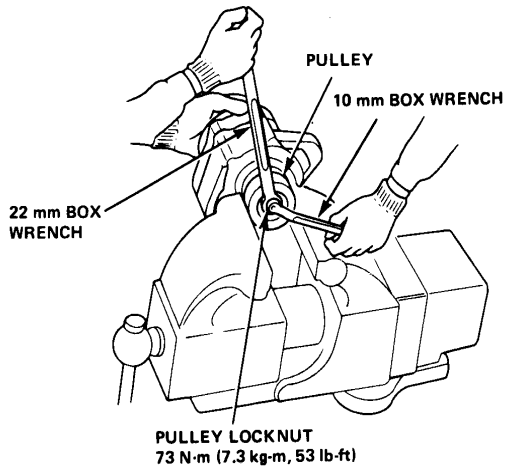

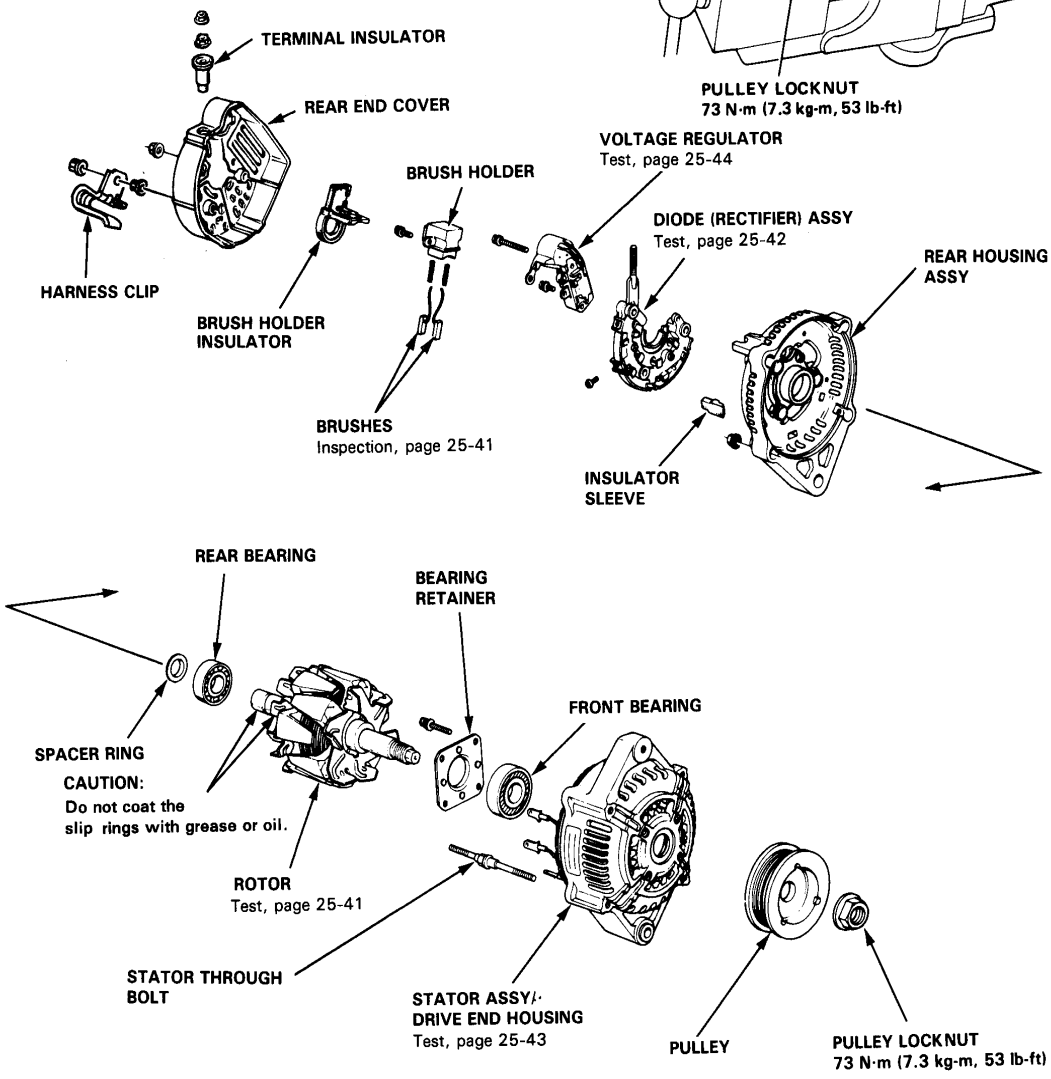

Alternator Brush Inspection

1. Remove the rear end cover, then take out the brush holder by removing its 2 screws.

2. Measure length of the brushes with a vernier caliper.

Alternator Brush Length
Standard: 10.5 mm (0.41 in.)
Service Limit: 5.5 mm (0.22 in.)

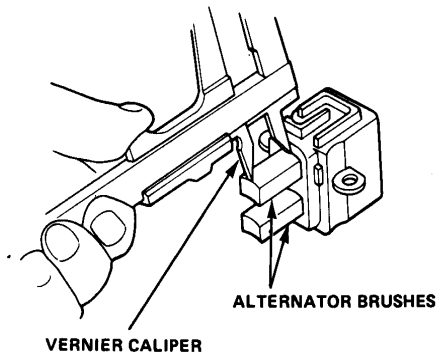

If the brushes are not within the service limit, replace them.

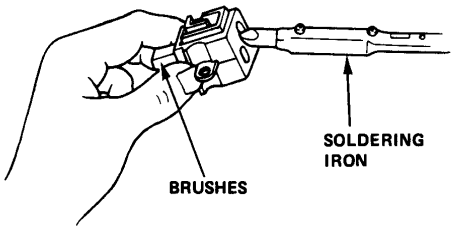

CAUTION: When replacing the brushes, use only a rosin core type solder or solder joints will corrode.

Rotor Slip Ring Test

1. Check that there is continuity between the slip rings.

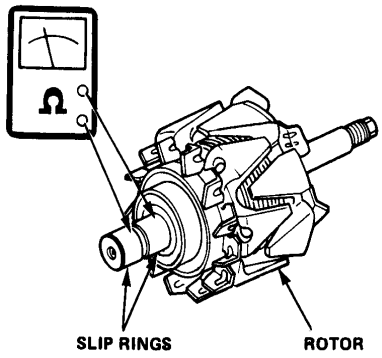

2. Check that there is no continuity between the rings and the rotor or rotor shaft.

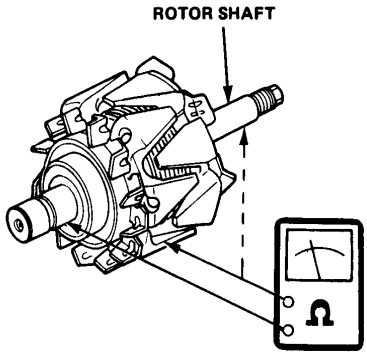

3. If the rotor fails either continuity check, replace it.

Engine Electrical

Rectifier Test

NOTE: The diodes are designed to pass current in one direction and block current in the opposite direction. Since the alternator rectifier is made up of eight diodes (4 pairs), each diode must be tested for continuity in both directions; a total of 16 checks.

1. Using an ohmmeter or continuity tester (test light), check one diode from each pair, in both directions:

   - Connect POSITIVE test probe to B+ terminal and NEGATIVE test probe to P terminal of each diode pair. Note readings.

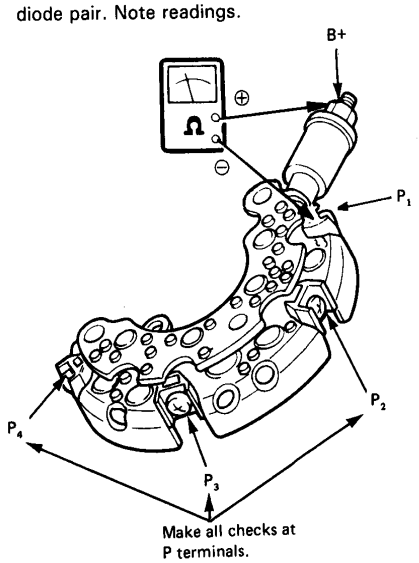

   - Reverse probe position and check the diodes at P terminals again.

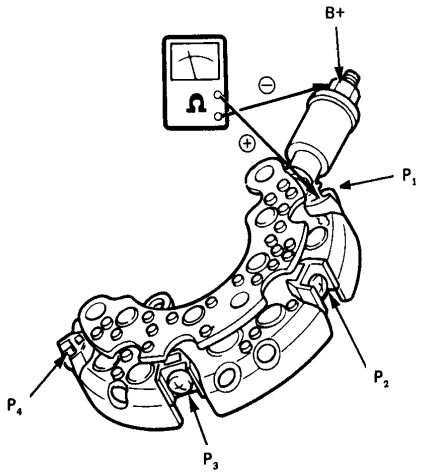

2. Check the other diode from each pair, in both directions:

   - Connect NEGATIVE test probe to ground terminal and POSITIVE probe to P terminal of each diode pair.

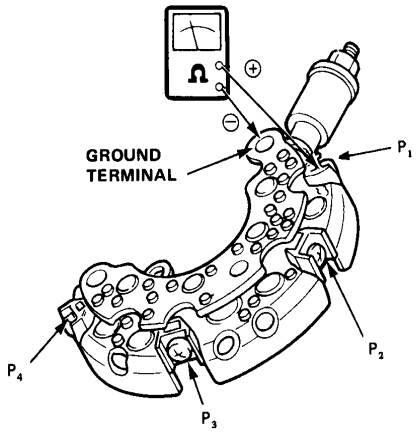

   - Reverse probe position and check the diodes at P terminals again.

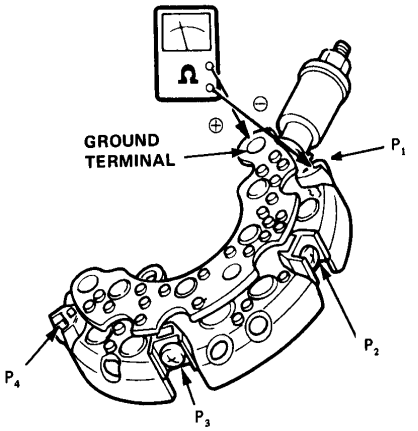

3. If any of the 16 checks shows continuity in both directions, or no continuity in both directions, the diode is defective and the rectifier assembly must be replaced. (Diodes are not available separately.)

Stator Test

1. Check that there is continuity between each pair of lead wires.

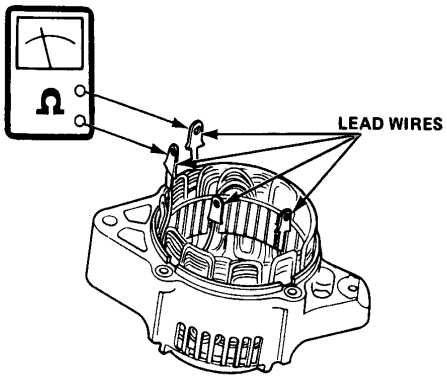

2. Check that there is no continuity between each lead wire and the coil core.

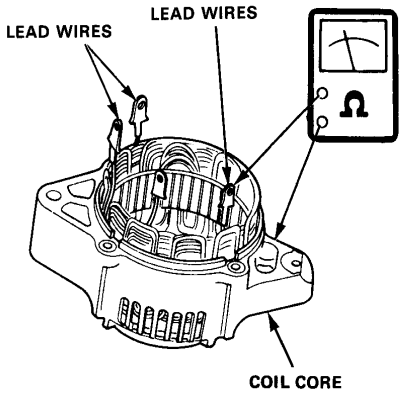

3. If the coil fails either continuity check, replace the stator.

Engine Electrical

Alternator and Regulator Test

1. Check the alternator belt tension, and adjust or replace the belt as necessary.

2. Start the engine and take the voltage reading at the battery under no load.

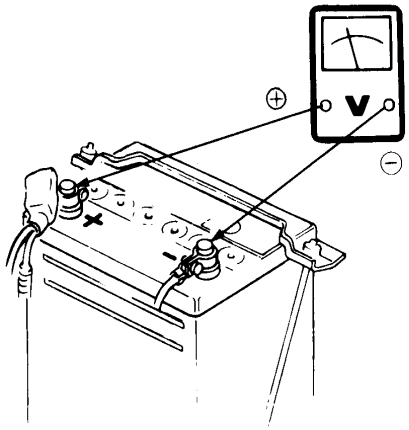

- If the reading is 13.9—15.1 volts, check the alternator output.

- If the reading is more than 15.1 volts, remove the rear end cover and brush holder, and check for continuity between each slip ring and ground.

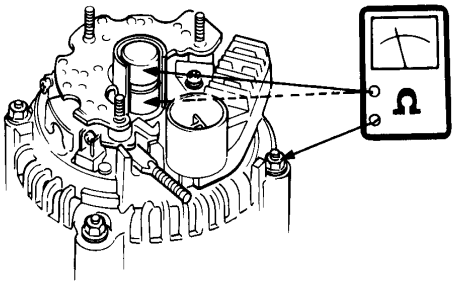

  — If either slip ring or both are grounded, the rotor coil is poorly insulated and calls for replacement.

  — If there is no continuity between each slip ring and ground, replace the voltage regulator.

- If the reading is about 12 volts, go on to step 3.

3. With the engine off, check the alternator B terminal and engine wire harness connector for secure connection.

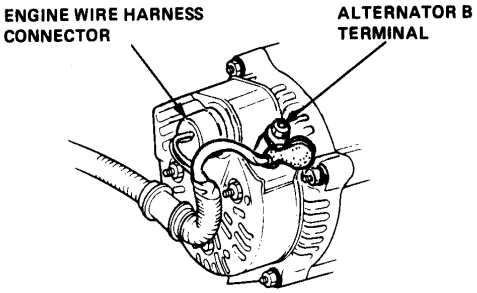

- If loose or not connected securely, repair and repeat step 2.

- If OK, go on step 4.

4. Stop the engine and disconnect the engine wire harness connector from the alternator. Take the voltage reading between the connector IG terminal and ground.

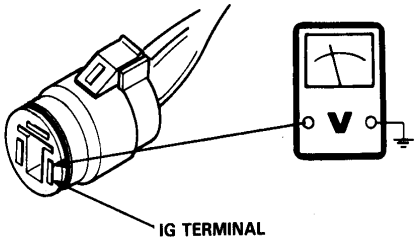

- If there is no battery voltage, check the IG terminal wire (black/yellow) and No. 4 fuse (10A).

- If there is battery voltage, go on to step 5.

5. Check the rectifier and stator.

- If OK, replace the voltage regulator.

- If not OK, repair or replace either the rectifier or stator and go to step 2.

Body Electrical

Body Electrical

Illustrated Index

Before troubleshooting:

- Check the main fuse and the fuse box.
- Check the battery for damage, state of charge, and clean and tight connections.

CAUTION:

- **Do not quick-charge a battery unless the battery ground cable has been disconnected, or you will damage the alternator diodes.**
- **Do not attempt to crank the engine with the ground cable disconnected or you will severely damage the wiring.**

- Check the alternator belt tension.

While you're working:

- Make sure connectors are clean, and have no loose pins or receptacles.

CAUTION: Do not pull on the wires when disconnecting a connector; pull only on the connector housing.

- When connecting a connector, push it until it clicks into place.
- Make sure multiple pin connectors are packed with silicone grease.

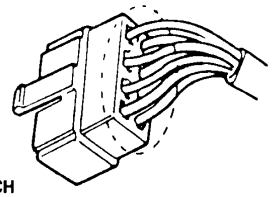

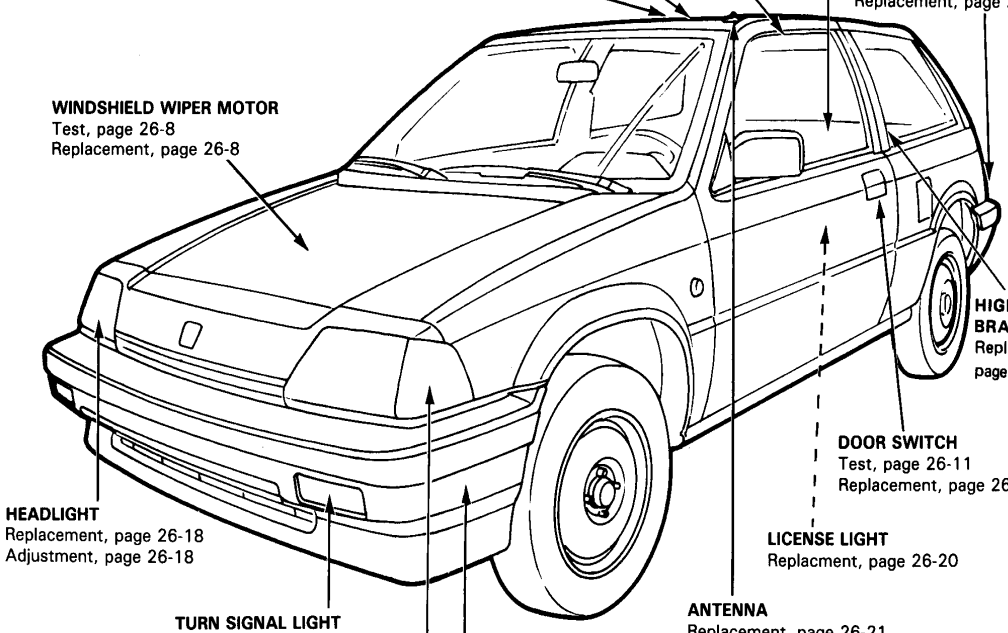

Hatchback shown

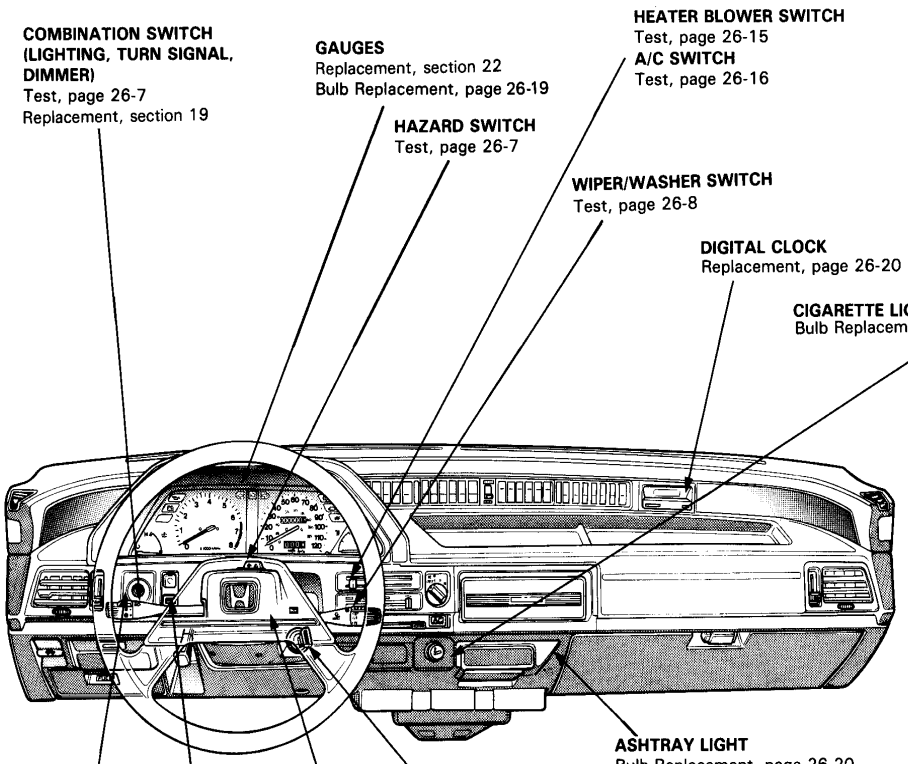

COMBINATION SWITCH (LIGHTING, TURN SIGNAL, DIMMER)
Test, page 26-7
Replacement, section 19

GAUGES
Replacement, section 22
Bulb Replacement, page 26-19

HAZARD SWITCH
Test, page 26-7

HEATER BLOWER SWITCH
Test, page 26-15
A/C SWITCH
Test, page 26-16

WIPER/WASHER SWITCH
Test, page 26-8

DIGITAL CLOCK
Replacement, page 26-20

CIGARETTE LIGHTER
Bulb Replacement, page 26-20

ASHTRAY LIGHT
Bulb Replacement, page 26-20

IGNITION SWITCH
Test and Replacement, page 26-6
KEY SWITCH
Test and Replacement, page 26-12

HORN SWITCH
Test, page 26-13

DEFROSTER SWITCH
Test, page 26-10
Bulb Replacement, page 26-10

DASHLIGHT BRIGHTNESS CONTROLLER
Test, page 26-15

TAILGATE SWITCH (Wagon only)
Test, page 26-14
TAILGATE OPENER SOLENOID (Wagon only)
Test, page 26-14

Body Electrical

Relay, Amplifier and Control Unit Locations

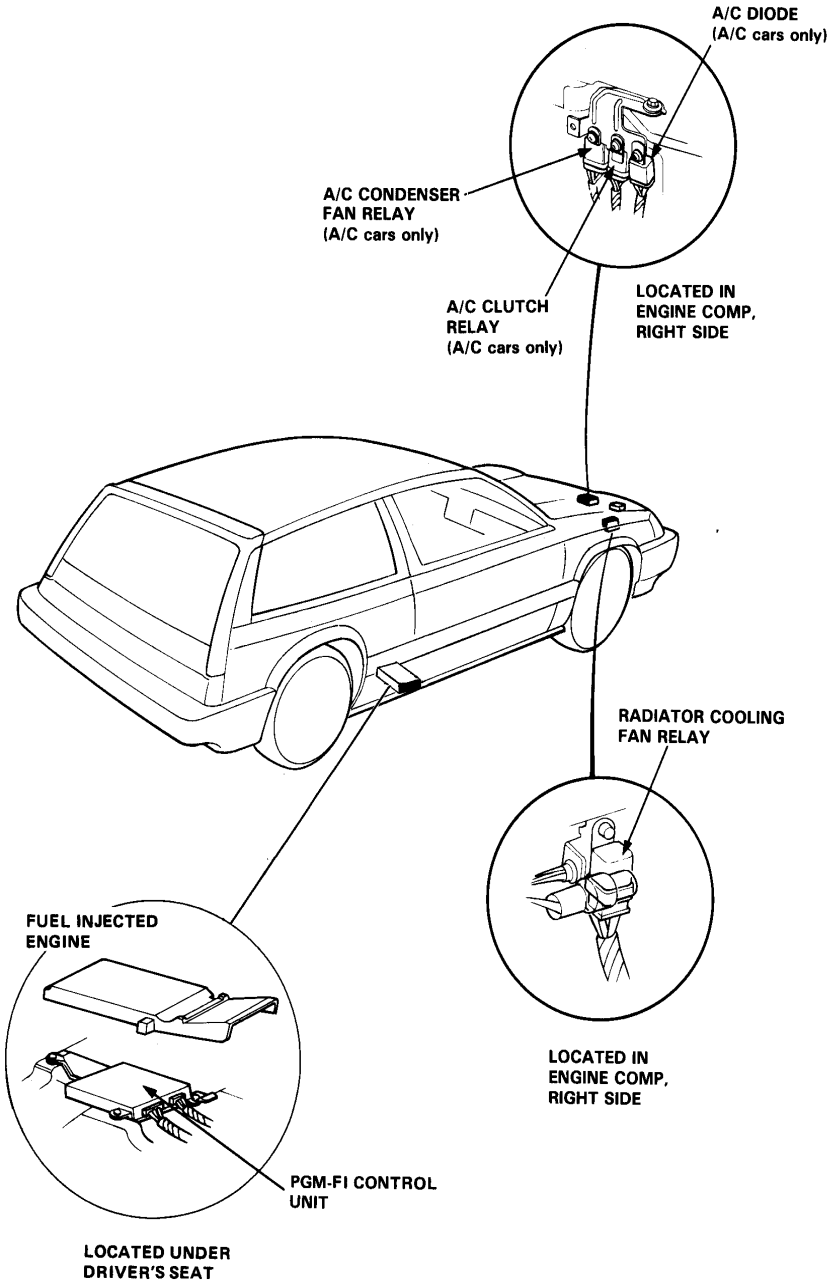

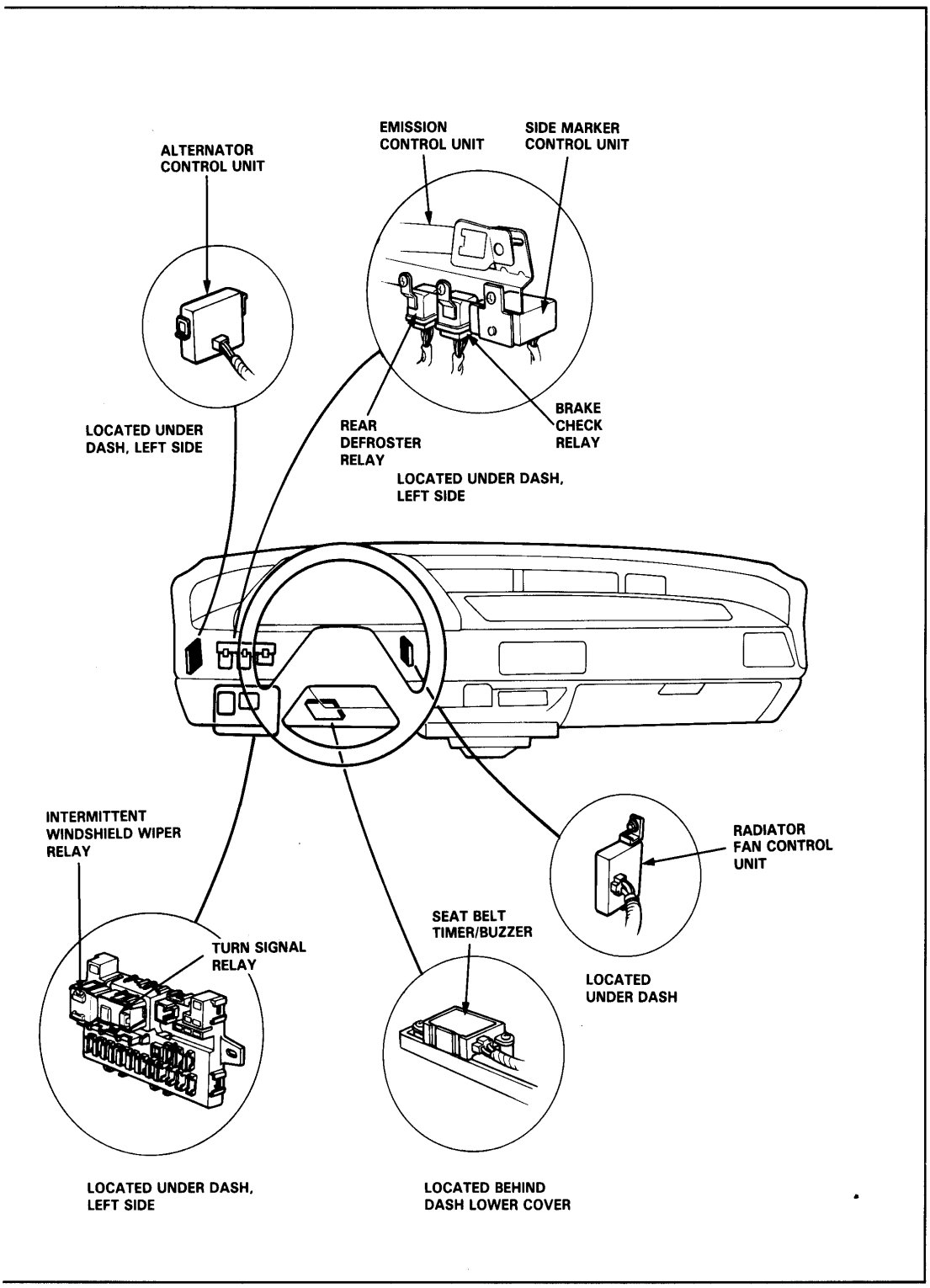
ALTERNATOR CONTROL UNIT
EMISSION CONTROL UNIT
SIDE MARKER CONTROL UNIT
LOCATED UNDER DASH, LEFT SIDE
REAR DEFROSTER RELAY
BRAKE CHECK RELAY
LOCATED UNDER DASH, LEFT SIDE
INTERMITTENT WINDSHIELD WIPER RELAY
RADIATOR FAN CONTROL UNIT
SEAT BELT TIMER/BUZZER
TURN SIGNAL RELAY
LOCATED UNDER DASH
LOCATED UNDER DASH, LEFT SIDE
LOCATED BEHIND DASH LOWER COVER

Body Electrical

Steering Lock Replacement

1. Remove the steering column covers.
2. Disconnect the ignition switch connector.
3. Center punch each of the 2 shear screws and drill their heads off with a 3/8 in. drill bit.

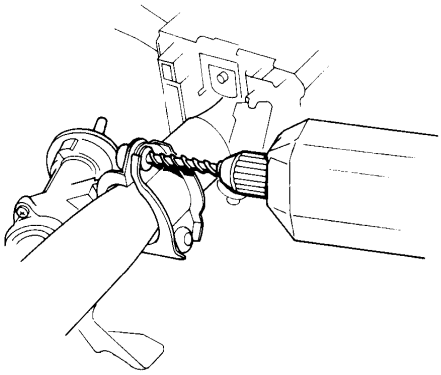

4. Install the new ignition switch without the key inserted.
5. Hand tighten the new shear screws.

   NOTE: Make sure the projection of the ignition switch is aligned with the hole of the steering column.
6. Insert the ignition key and check for proper operation of the steering wheel lock.
7. Tighten the shear screws until the hex heads twist off.

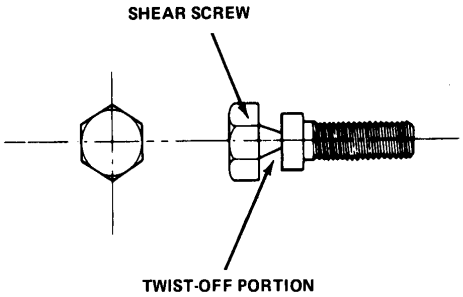

Ignition Switch Replacement (Electrical)

1. Insert the key and turn it to 0.
2. Untape the switch wires to free the switch base wires.
3. Remove the two screws and replace the base of the switch.

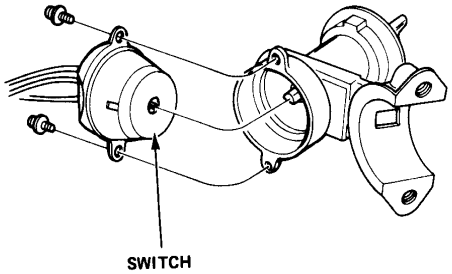

NOTE: Make sure the recess of the switch is aligned with the projection of the lock when installing.

Ignition Switch Test

Check for continuity according to the table.

Position \ Terminal	ACC	BAT	IG1	IG2	ST
0					
I	O——	——O			
II	O——	——O	——O	——O	
III		O——	——O		——O
Wire Color	W/R	W	Bl/Y	Bl/Y	Bl/W

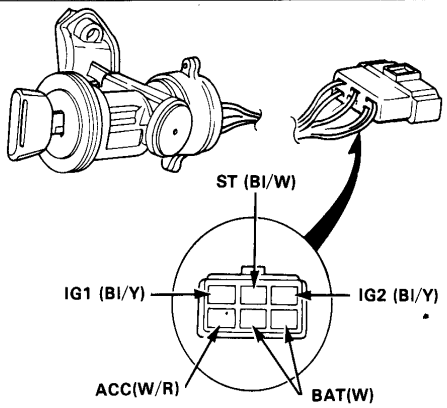

Combination Switch Test

See section 18 for removal.

Check for continuity between the terminals in each switch position according to the tables.

CAUTION: Check that the levers work freely without binding.

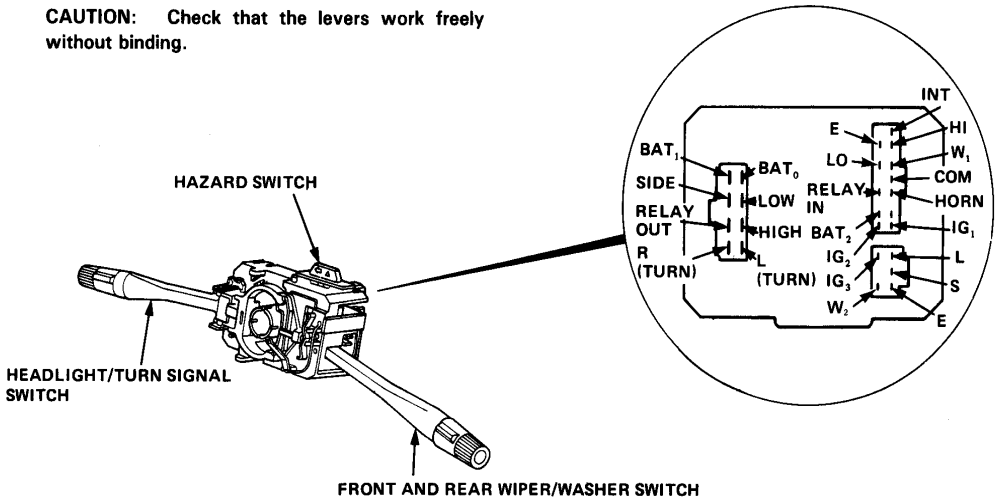

Front Wiper Switch

Position / Terminal		HI	LO	E	COM	IG_1	INT
Wiper	Mist						
OFF	OFF		○		○		
	ON	○		○			
INT	OFF		○		○	○	○
	ON	○		○		○	○
LO	OFF		○	○			
	ON	○		○			
HI	OFF	○		○			
	ON	○		○			

Front Washer Switch

Position / Terminal	W_1	IG_1
OFF		
ON	○	○

*

Hazard/Turn Signal Switch

Position / Terminal		BAT_2	IG_2	RELAY IN	RELAY OUT	R (TURN)	L (TURN)
Hazard	Turn signal						
OFF	R		○	○	○	○	
	NEUTRAL		○	○			
	L		○	○	○		○
ON		○		○	○	○	○

Headlight Switch

Position / Terminal	BAT_1	SIDE	BAT_0	HEAD
OFF				
•	○	○		
●	○	○	○	○

Dimmer Switch

Position / Terminal	HEAD	HIGH	LOW
HIGH	○	○	
LOW	○		○

* *

Passing Light Switch

Position / Terminal	BAT_0	HIGH
OFF		
ON	○	○

*

Rear Wiper Switch

Position / Terminal	L	S	E
OFF	○	○	
ON	○		○

Rear Washer Switch

Position / Terminal	IG_3	W_2
OFF		
ON	○	○

*Internal connection

Body Electrical

Windshield Wiper Motor

Replacement

1. Remove the nuts, raise the wiper arm and remove.

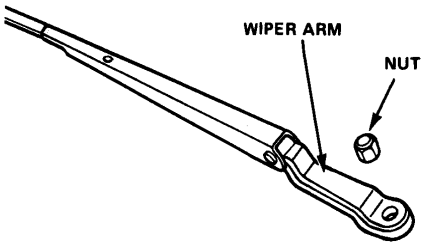

2. Remove the clips and remove the air scoop.

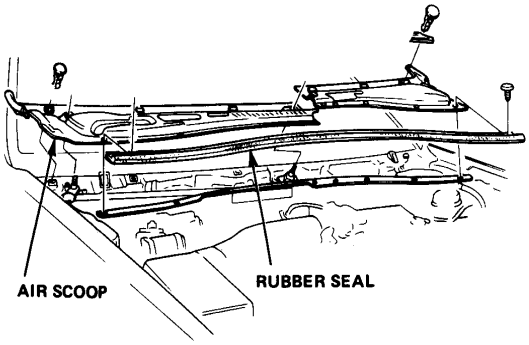

3. Disconnect the link joint to the wiper motor.

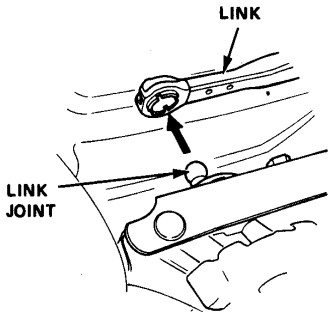

4. Pull off the clip and remove the motor cover.

5. Disconnect the wiper motor wire connector, remove the three motor mounting bolts and then remove the wiper motor.

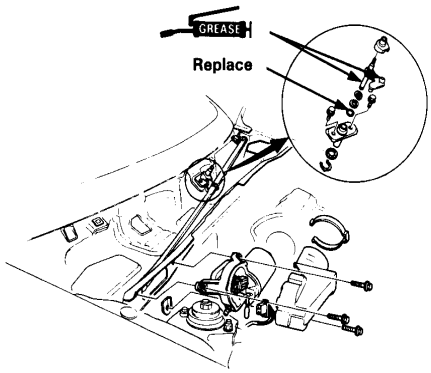

6. Install new wiper motor in the reverse order of removal.

   NOTE: Coat the link joints with grease and make sure the linkage moves smoothly.

Testing

1. Check for continuity with the wiper mechanism in the parked position. There should be continuity between the Bu/W and G/Bl, and no continuity between the Bu/W and Bl leads.
2. Test motor low speed by applying battery voltage: positive to the G/Bl lead and negative to the Bu lead.
3. Test motor high speed by applying battery voltage: positive to the G/Bl lead and negative to the Bu/Y lead.
4. If motor fails to run smoothly, replace the motor assembly.

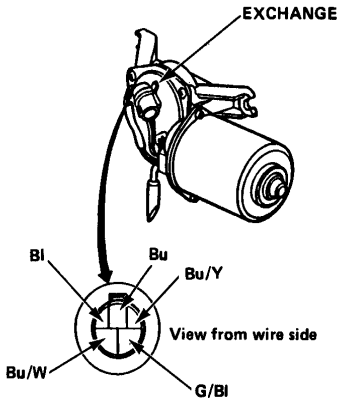

Rear Wiper Motor Test

1. Remove the tailgate trim panel.
2. Test the wiper motor by applying battery voltage: negative to G, and positive to G/Bl.
3. If the motor fails to turn smoothly, replace it.

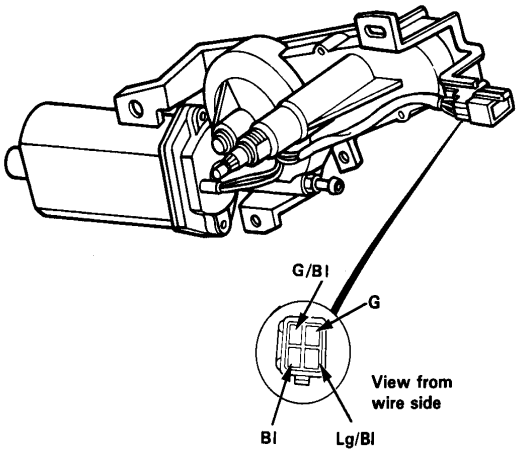

Washer Motor Test

Test the motor speed by applying battery voltage to its terminals.

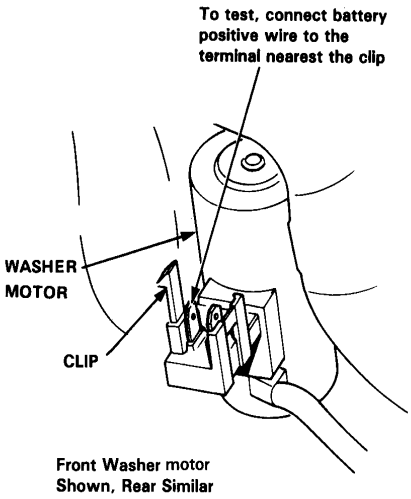

Rear Wiper Motor Replacement

1. Pull off the cover and remove the nut then remove the wiper arm.
2. Remove the pivot cap and special nut, then remove the washer, rubber cushion and spacer.
3. Remove the tailgate trim panel, see section 22.
4. Disconnect the motor wire connector.
5. Remove the motor mounting bolts, then remove the wiper motor.

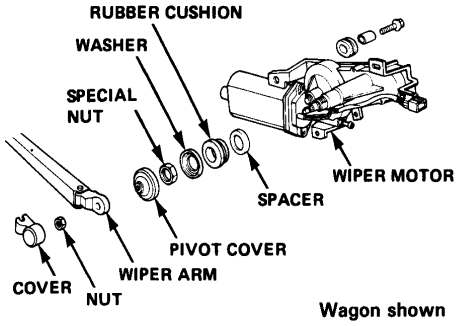

Washer Motor Replacement

NOTE: On models with rear wiper/washer, both front and rear washer motors are attached to a single reservoir tank, located in the engine compartment.

1. Open the hood and remove the mounting screw, then pull the washer tank up.
2. Disconnect the washer motor wire connector(s) and washer hose(s) from the washer motor(s).
3. Remove the washer motor(s) from the washer tank.

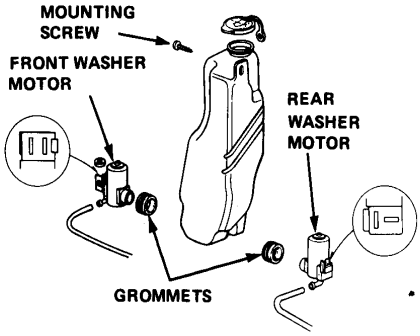

NOTE: When installing a washer motor, insert the grommet first then attach the washer motor.

Body Electrical

Rear Defroster Switch Replacement

1. Remove the dashboard lower panel (except wagon).
2. Disconnect the wire harness from behind the console.
3. Release the switch pawls and remove the switch.

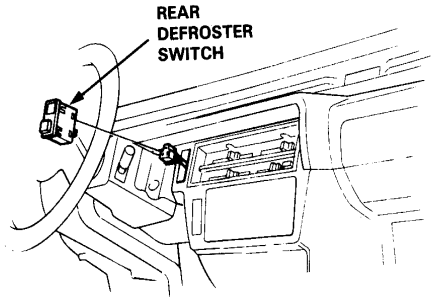

Wagon shown, others similar

Rear Defroster Relay Test

There should be continuity between A and B terminals, when applying battery voltage to C (positive) and D (negative) terminals. There should be no continuity when the battery is disconnected.

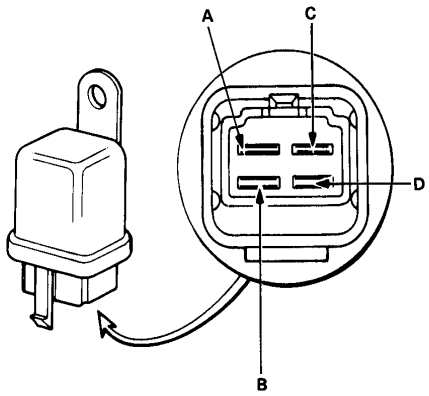

Rear Defroster Switch Test

Check for continuity.

Terminal / Position	B	D		E
OFF				
ON	○	○	(B/W)	○

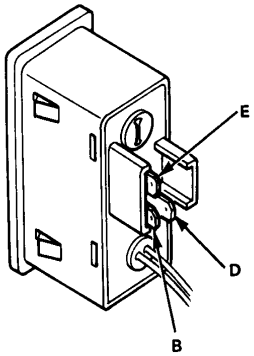

Rear Defroster Switch Bulb Replacement

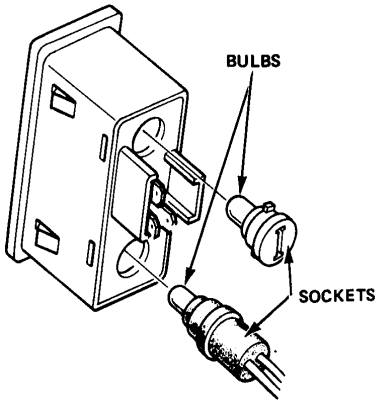

Dome Light Replacement

1. Pry off the lens.
2. Remove the bulb and replace it if necessary.
3. Remove the screw from the dome light and pry the rear of the housing out of the headliner.

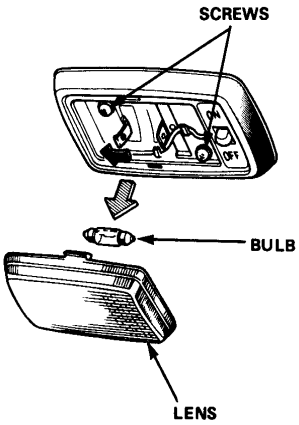

Door Switch Replacement

1. Remove the screws and pull out the door switch.
2. Disconnect the switch wire, then remove the door switch.

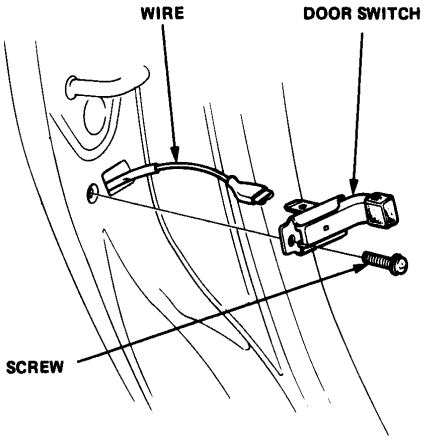

Dome Light Switch

Check for continuity according to the table.

Terminal / Position	Ⓐ	Ⓑ	Ⓒ
OFF			
MID.	○—○		
ON		○—○	

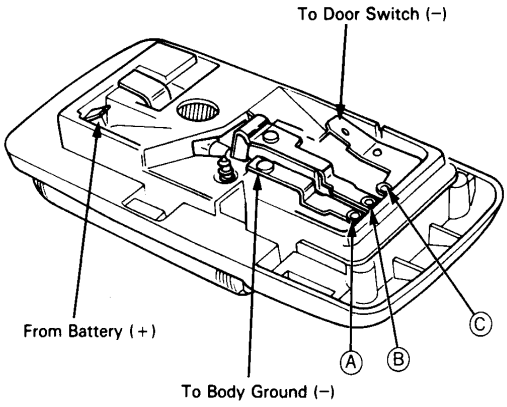

Door Switch Test

There should be no continuity when the switch is pushed (door is closed), and continuity when the switch is released (door is open).

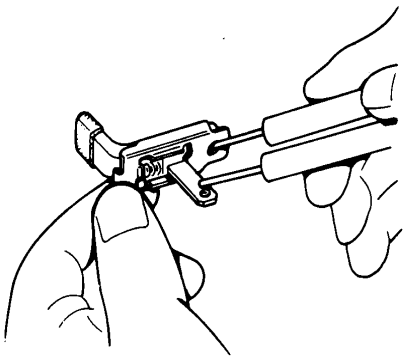

Body Electrical

Seat Belt Switch Test

Check for continuity.

- There should be continuity when the seat belt is not buckled.
- There should be no continuity when the seat belt is buckled.

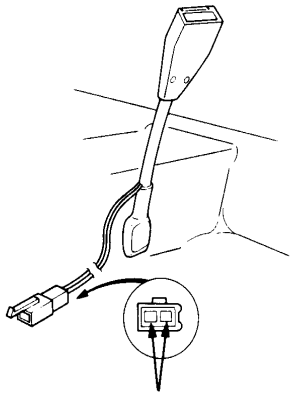

Key Switch Test

Check for continuity.

- Turn the ignition switch on, then turn to LOCK position. There should be continuity when the ignition key is inserted.
- There should be no continuity when the ignition key is removed.

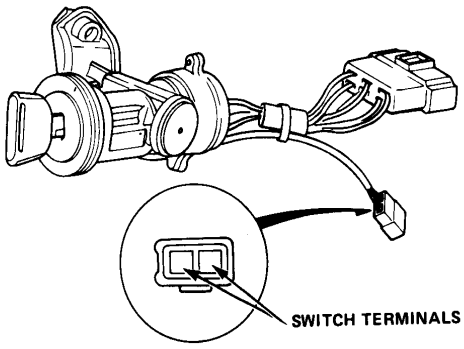

Key Switch Replacement

1. Remove the ignition switch assembly page 26-6.
2. Untape the switch wires.
3. Remove the screw and replace the key switch.

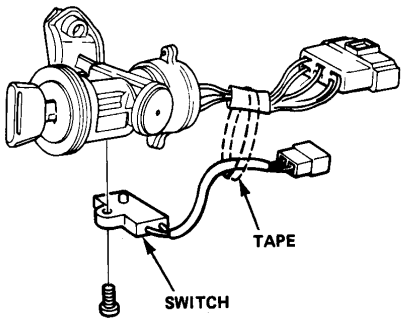

NOTE: Secure the switch wires using tape.

Horn Switch Test

There should be continuity between the contact ring and hub core when the horn switch is depressed, and no continuity when released.

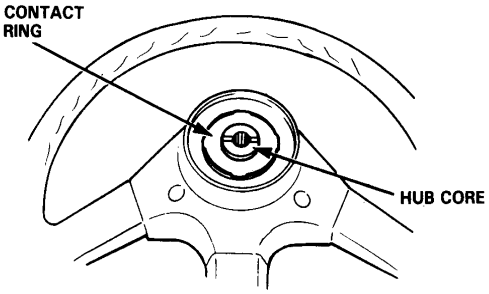

Trunk Light/Switch Test

Make sure that the bulb is in good condition.
Set the trunk light switch in the ON position and check for continuity between terminals.

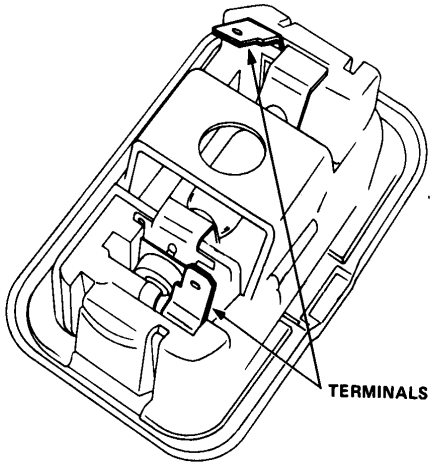

Trunk Latch Switch Test

There should be continuity between G/Bl lead and ground when the trunk lid is open, and no continuity when the latch is in the closed position.

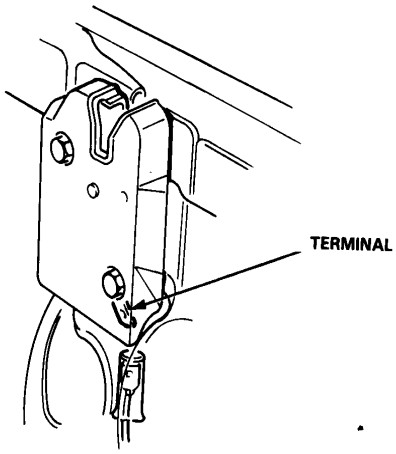

4 Door Sedan Shown, others similar

Body Electrical

Tailgate Switch Replacement (Wagon Only)

1. Release the switch pawls and pull the switch out.
2. Disconnect the connector and remove the switch.

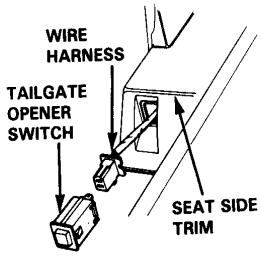

Tailgate Switch Test (Wagon Only)

There should be continuity between the switch terminals when the switch is pushed, and no continuity when the switch is free.

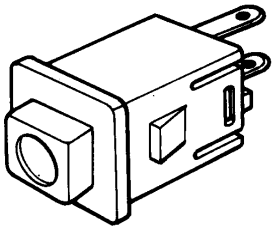

Tailgate Solenoid Test (Wagon Only)

Check for continuity between the terminal and the solenoid body ground. There should be continuity; replace the solenoid if no continuity.

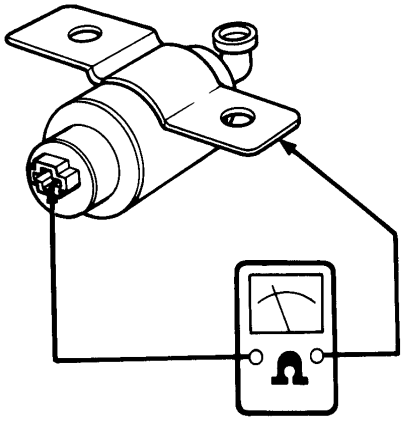

Dash Light Brightness Controller Test

1. Turn the lighting switch on, with the connector plugged in.
2. Connect the volt meter positive probe to terminal A (R lead) and negative probe to terminal B (Bl lead).
3. Turn the controller adjustment knob.
4. Controller is normal if the voltage varies, as the knob is turned.

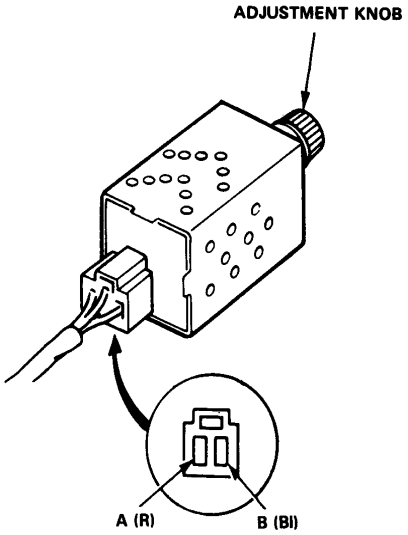

Heater Blower Switch Test

See section 23 for removal.
Check for continuity according to the table.

Position \ Terminal	E	L	M_1	M_2	H	C
OFF						○
I	○	○				○
II	○		○			○
III	○			○		○
MAX	○				○	○

Hatchback and Sedan:

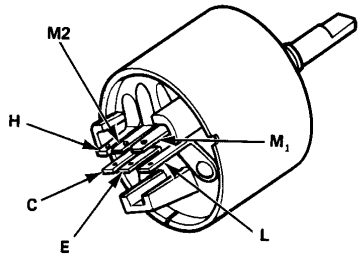

Wagon:

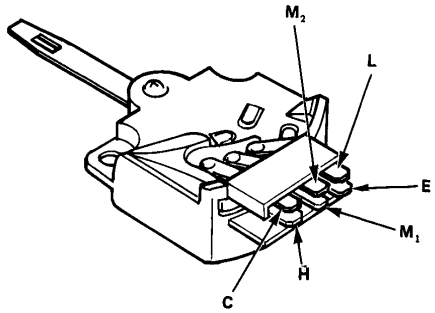

Body Electrical

A/C Switch Test

Check for continuity according to the table below.

Terminal / Position	C	T		B
OFF		○	(W)	○
ON	○	○	(Y)	○
Wire Color	G	Bu/R		Y/Bl

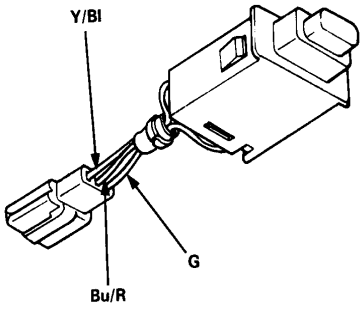

Brake Light Switch Test

Check for continuity between both terminals with an ohmmeter.

- With the switch plunger pushed in, there should be no continuity.
- With the switch plunger released, there should be continuity. If no continuity, replace switch.

NOTE: If you replace the brake light switch, or change its position, readjust pedal height section 21).

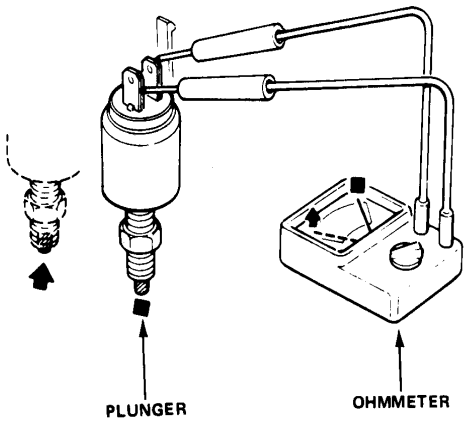

Parking Brake Switch

Attach one test probe of an ohmmeter to the switch, and the other to the body.

- With the brake lever up, there should be continuity.
- With the brake lever down, there should be no continuity.

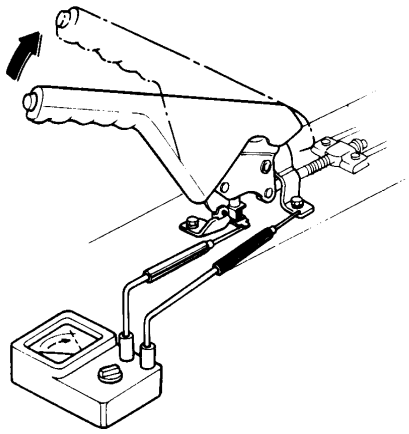

If continuity readings are incorrect, replace switch.

Trunk Light Replacement

1. Pry the lens off.
2. Then pry the light housing out of the body panel.
3. Disconnect the light leads.

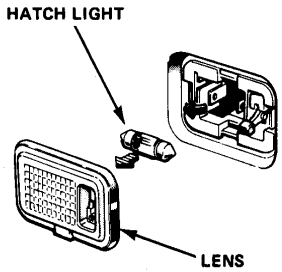

Body Electrical

Headlight Replacement

CAUTION:
- **Do not touch the glass surface of bulbs with bare hand or dirty glove. Otherwise it may cause damage their proper function.**
- **Do not touch bulbs with hands or skin while they are on or just after they are put out. They are hot.**
- **Do not try to replace bulbs or clean the headlight until with lights on.**
- **After replacing bulbs, install the boot while pushing it tightly to the unit.**

1. Disconnect the wire harness connector.
2. To remove the headlight, first remove the:
   - Front position light.
   - Front bumper. (section 22).
   - Front grille. (section 22).
3. Remove the headlight mount bolts to remove the headlight.
4. To remove the bulb only, it is not necessary to remove the headlight.

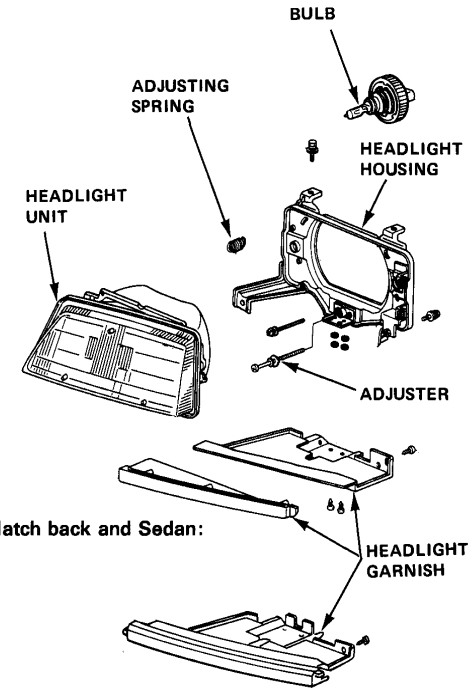

Hatch back and Sedan:

Wagon 2WD and 4WD:

Headlight Adjustment

NOTE: Adjust headlight to local requirement.

Hatch back and Sedan:

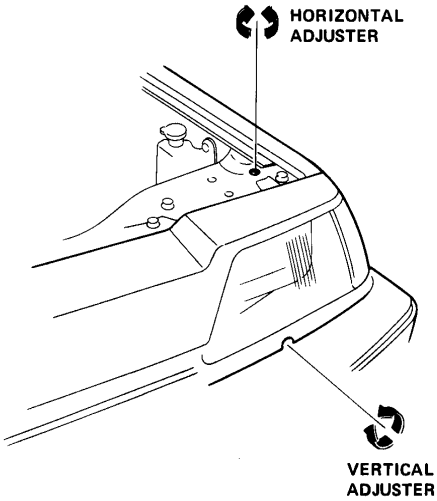

Wagon 2WD and 4WD:

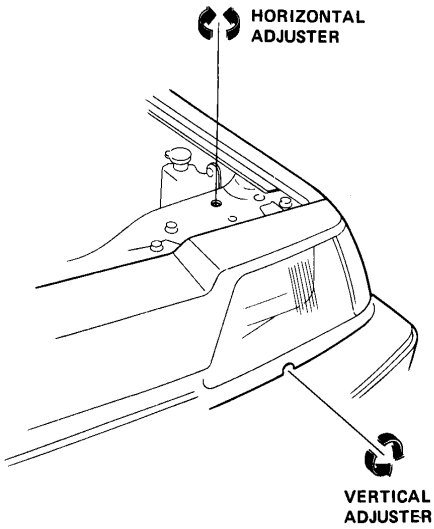

Gauge Bulb Replacement

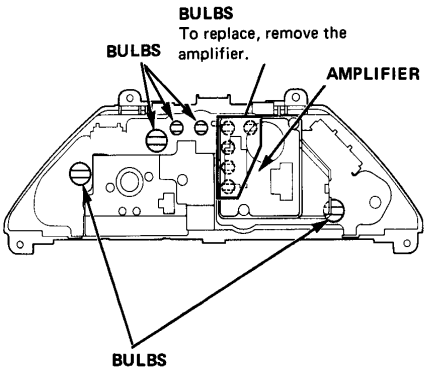

Taillight Replacement

Unscrew the nuts, and remove the taillight assembly.

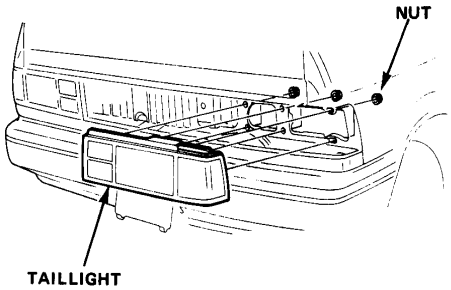

For bulb replacement only, remove the cover from the inside.

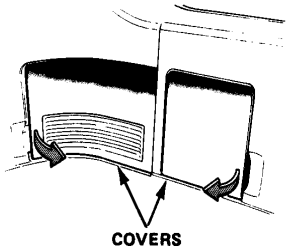

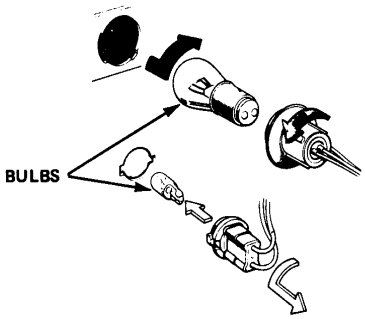

Body Electrical

Front Turn Signal Light Replacement

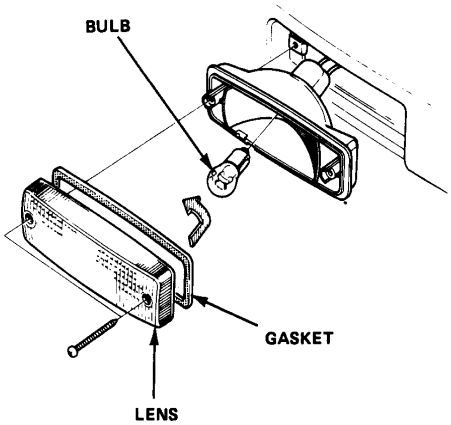

Cigarette Lighter/Ashtray Bulb Replacement

Remove the ring nut, then remove the cigarette lighter.

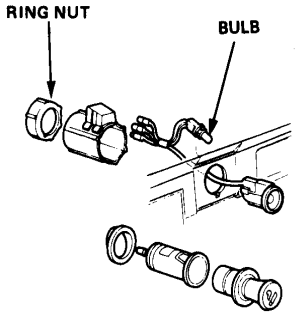

License Light Replacement

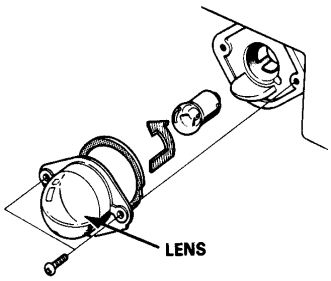

To replace bulb only, remove lens from outside.

Clock Replacement

Pry out the clock from the instrument panel, and disconnect the clock connector; then remove the clock.

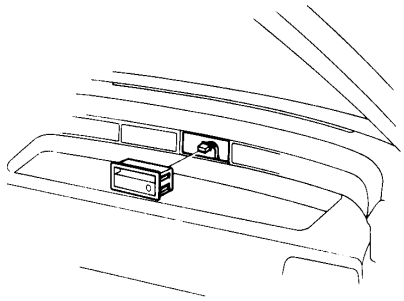

High Mount Brake Light Replacement

1. Remove the 2 screw covers and screws, then remove the high mount brake light on the rear shelf.

   CAUTION: When installing the high mount brake light, make sure the mount rubber is sealed evenly to the rear window glass.

2. If necessary, replace the bulb.

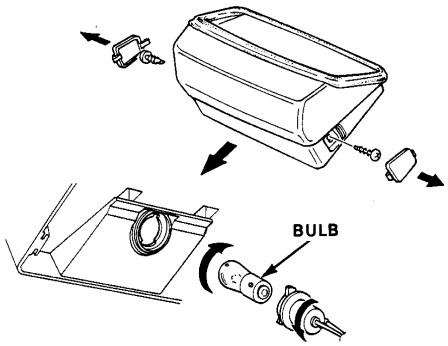

Parking/Side Marker Light Replacement

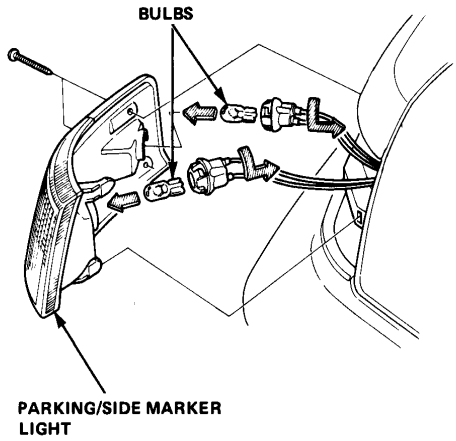

Antenna Replacement

1. Remove the radio and disconnect the antenna cable from the radio.
2. Remove the two antenna mounting screws.
3. Tie a piece of string or wire to the antenna cable plug before pulling antenna cable out, (leave the string in the pillar then use it to install the new antenna).
4. Remove the antenna.

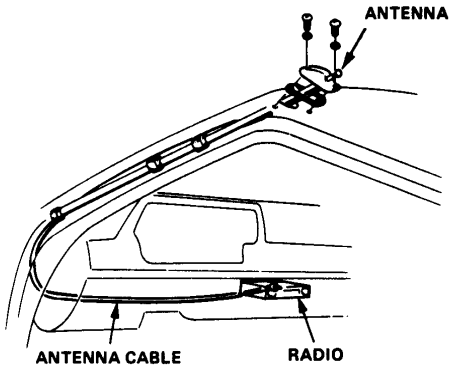

Harness, Fuses, and Wiring Diagrams

Harness, Fuses, and Wiring Diagrams

Troubleshooting Precautions

Before troubleshooting:

- Check the main fuse and the fuse box.
- Check the battery for damage, state of charge, and clean tight connections.

CAUTION:
- **Do not quick-charge a battery unless the battery ground cable has been disconnected, or you will damage the alternator diodes.**
- **Do not attempt to crank the engine with the ground cable disconnected or you will severely damage the wiring.**

- Check the alternator belt tension.

While you're working:

- Make sure connectors are clean, and have no loose pins or receptacles.

CAUTION: Do not pull on the wires when disconnecting a connector; pull only on the connector housings.

- When connecting a connector, push it until it clicks into place.
- Make sure multiple pin connectors are packed with silicone grease.

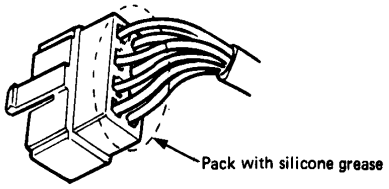

Wire Color Code

W — White
Y — Yellow
Bl — Black
Bu — Blue
G — Green
R — Red
O — Orange
Lb — Light Blue
Lg — Light Green
P — Pink
Br — Brown
Gr — Gray

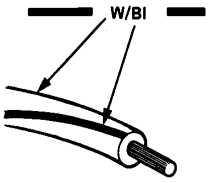

Wire insulator has one color or one color with another color stripe. The second color is the stripe.

How to Identify Connectors

Identification numbers have been assigned to all connectors. The number is preceded by the letter "C" for connectors, "GND" for ground terminals and "T" for non-ground terminals.

LOCATION / HARNESS	ENGINE COMPART-MENT	DASH-BOARD	OTHERS (FLOOR, DOOR, TRUNK or ROOF)
Engine wire harness	C-1 thru C-35, T-1 and T-2, GND-1		
A/C wire harness	(Hatchback and Sedan) C-51 thru C-61, GND-4	C-62 thru C-65,	
	(Wagon) C-51 thru C-58, GND-4	C-60 thru C-63	
Main wire harness	(Hatch back and Sedan) C-101 thru C-144, T-101 thru T-103, GAD-2 and GND-3	C-145 thru C-178, GND-5	C-179 thru C-197
	(Wagon) C-101 thru C-141, T-101 thru T-103, GND-2 and GND-3	C-144 thru C-178, GND-5	C-179 thru C-194
Dashboard wire harness		C-201 thru C-224, GND-6	
Rear wire harness			C-303 thru C-334, GND-7
Hatch wire harness			C-503 thru C-514, GND-8
Fuel tank wire harness			C-701 thru C-703
License plate light wire harness			C-711 thru C-715
Roof wire harness			C-721 thru C-724
Door speaker wires			C-731 thru C-738
A/C Pressure switch wire harness	C-741 thru C-744		
Rear defroster ground wire harness			C-751, GND-9

27-2

Connector and Wire Harness Location

Hatchback and Sedan:
Carbureted Engine:

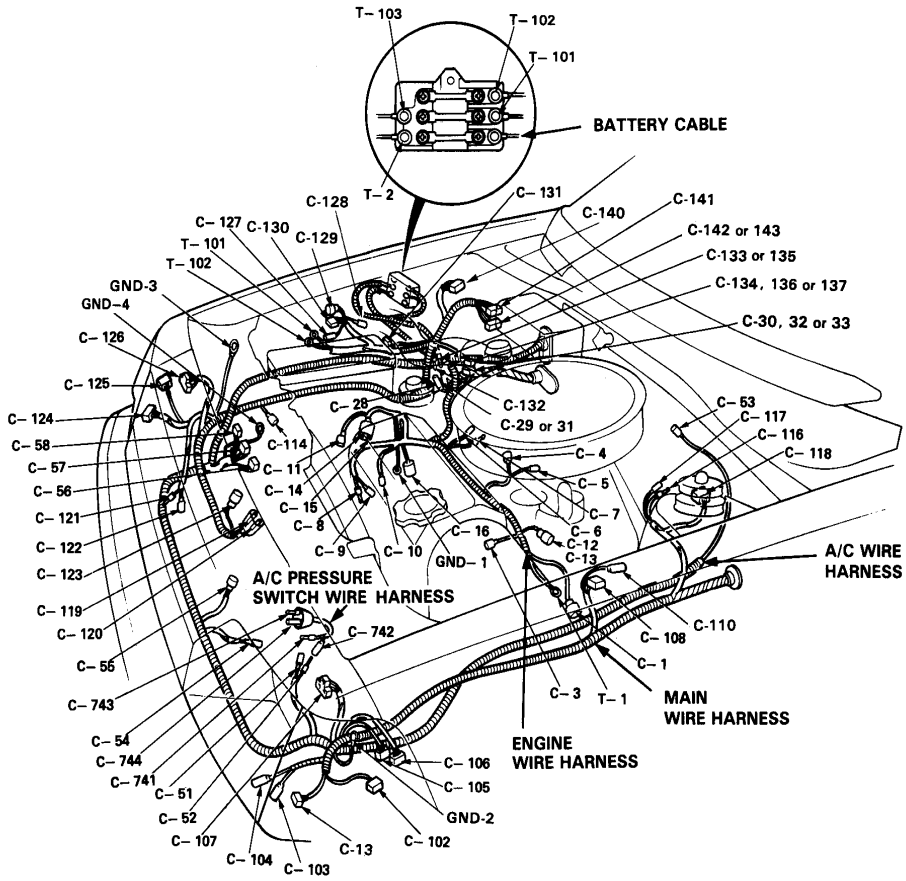

(cont'd)

Harness, Fuses, and Wiring Diagrams

Connector and Wire Harness Location (cont'd)

Hatchback and Sedan:

Fuel-injected Engine:

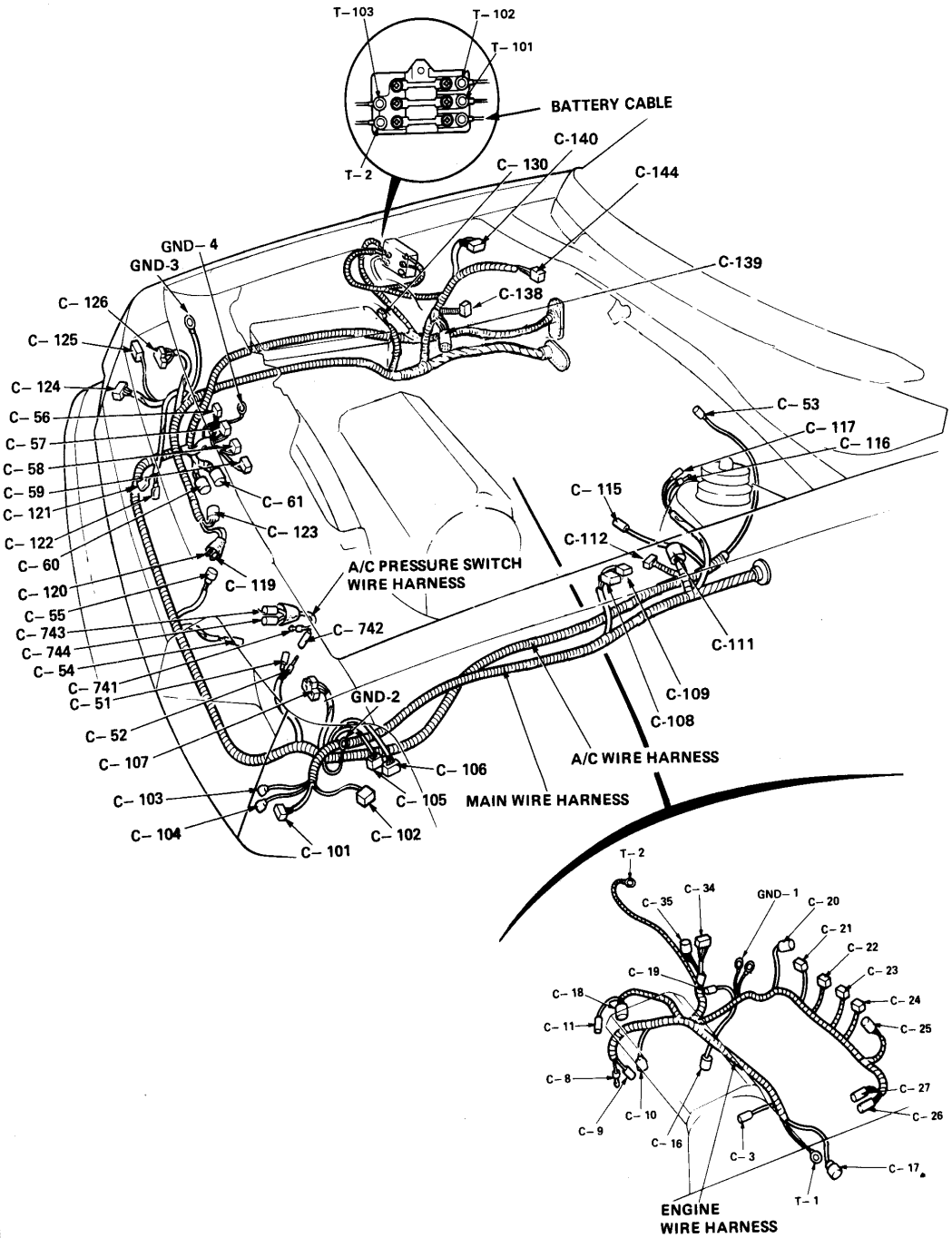

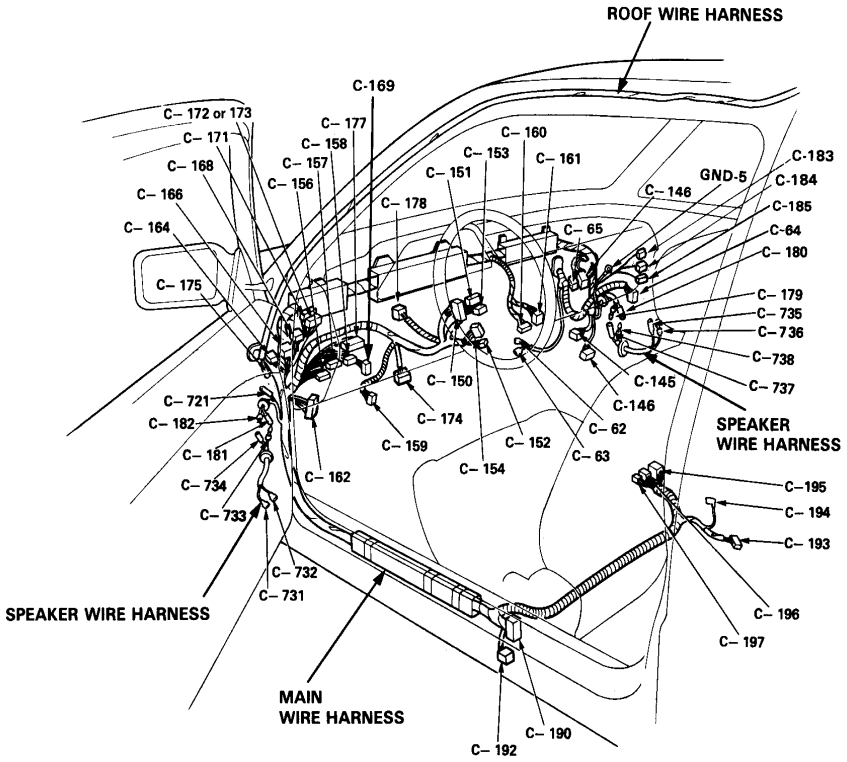
ROOF WIRE HARNESS
C-169
C- 172 or 173
C- 171
C- 168
C- 166
C- 164
C- 175
C- 177
C- 158
C- 157
C- 156
C- 178
C- 160
C- 153
C- 161
C- 151
C- 146
GND-5
C-183
C-184
C-185
C-64
C- 180
C- 65
C- 179
C- 735
C- 736
C-738
C- 737
C-145
C-146
C- 150
C- 174
C- 62
C- 159
C- 152
C- 63
C- 154
C- 162
C- 721
C- 182
C- 181
C- 734
C- 733
C- 732
C- 731
SPEAKER WIRE HARNESS
SPEAKER WIRE HARNESS
C-195
C- 194
C- 193
C- 196
C- 197
MAIN WIRE HARNESS
C- 190
C- 192

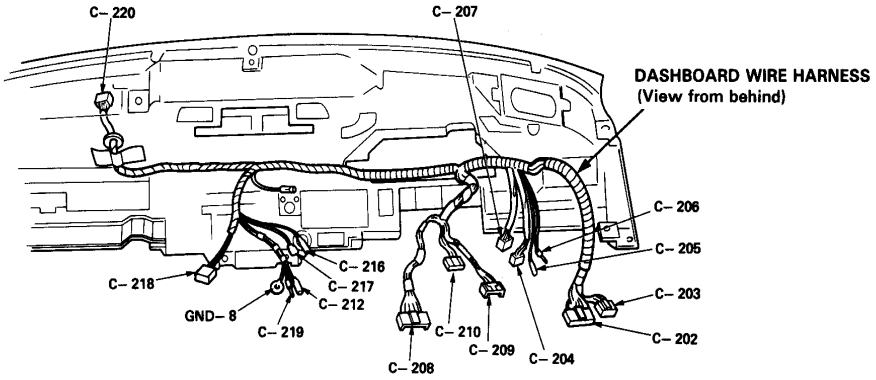
C- 220
C- 207
DASHBOARD WIRE HARNESS
(View from behind)
C- 206
C- 205
C- 203
C- 202
C- 216
C- 217
C- 212
C- 218
GND- 8
C- 219
C- 210
C- 209
C- 204
C- 208

(cont'd)

Harness, Fuses, and Wiring Diagrams

Connector and Wire Harness Location (cont'd)

Hatchback:

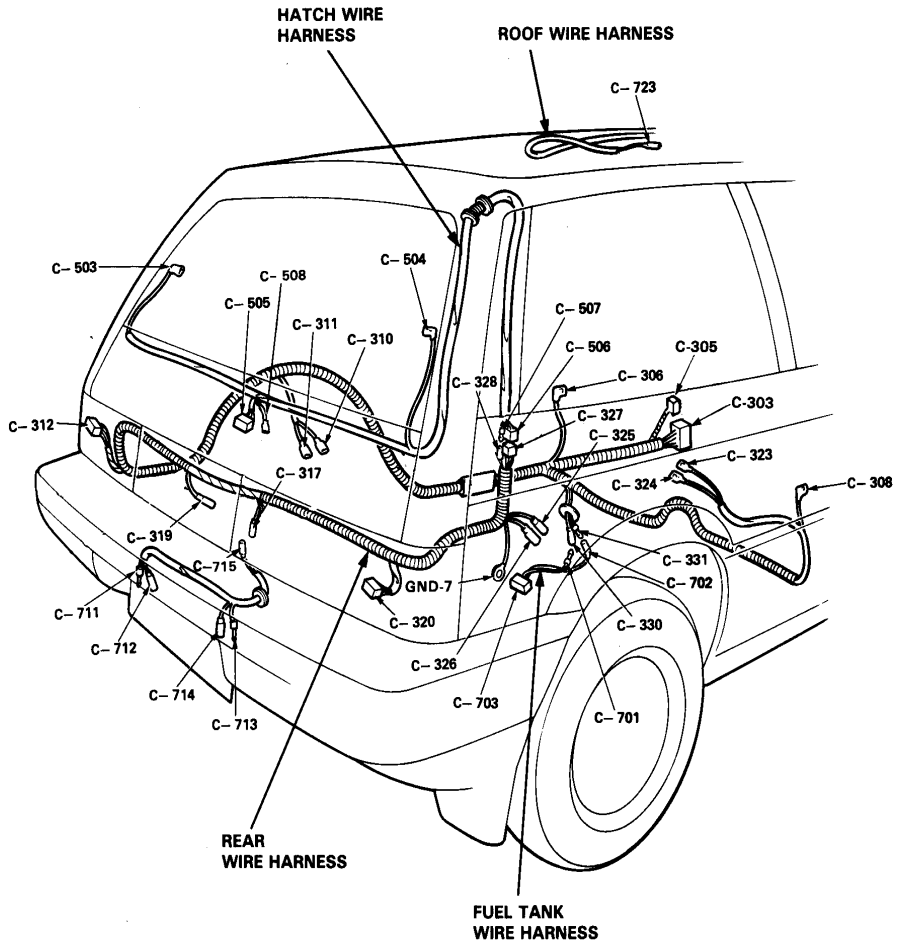

Sedan:

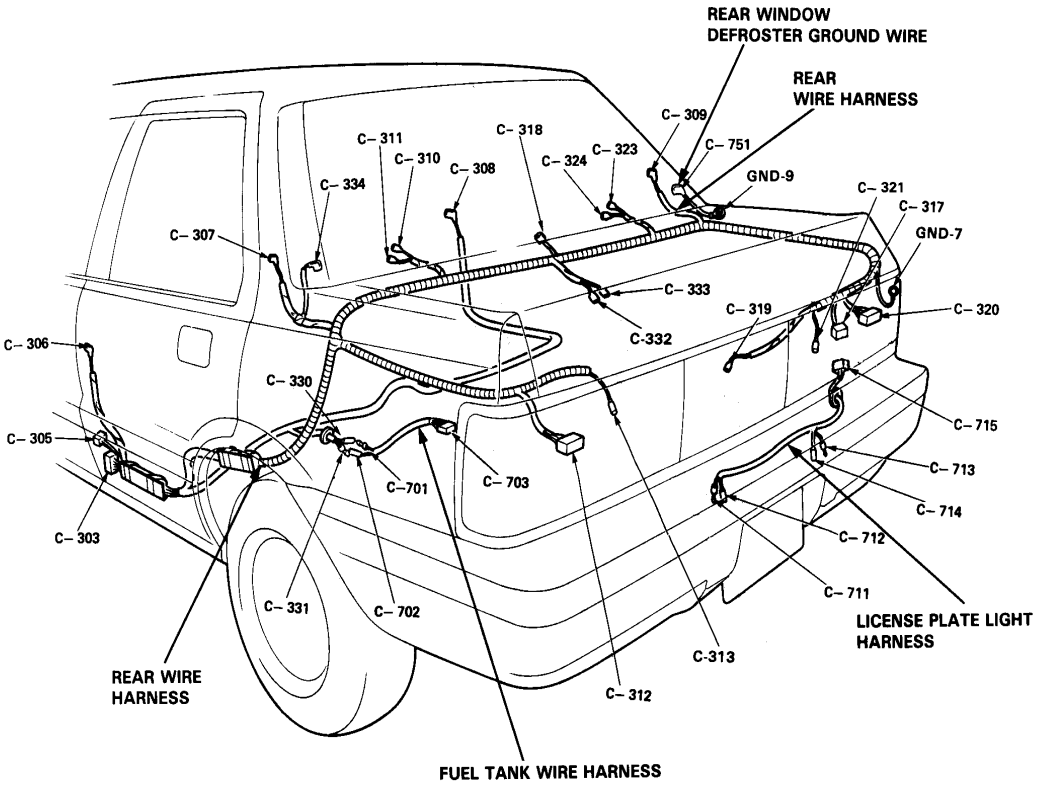
REAR WINDOW
DEFROSTER GROUND WIRE
REAR
WIRE HARNESS
C-309
C-751
C-318
C-311
C-310
C-308
C-324
C-323
GND-9
C-334
C-321
C-317
GND-7
C-307
C-333
C-319
C-320
C-332
C-306
C-330
C-715
C-305
C-713
C-701
C-703
C-714
C-303
C-712
C-711
C-331
C-702
LICENSE PLATE LIGHT
HARNESS
C-313
REAR WIRE
HARNESS
C-312
FUEL TANK WIRE HARNESS

(cont'd)

Harness, Fuses, and Wiring Diagrams

Connector and Wire Harness Location (cont'd)

Wagon:

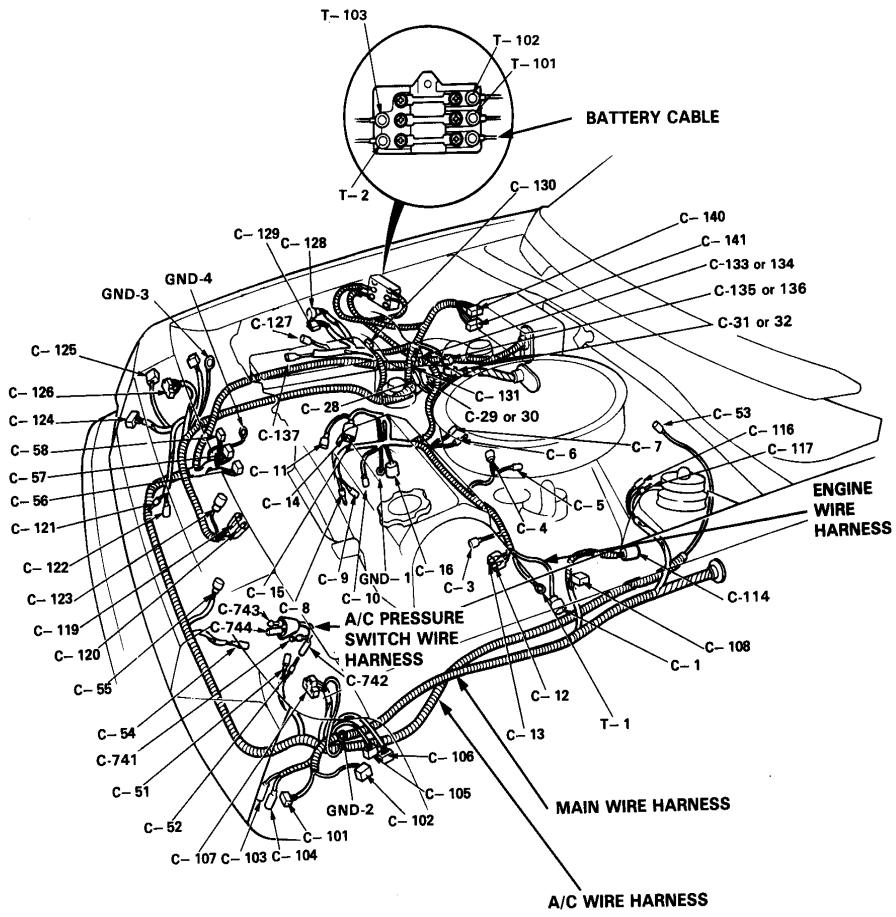

Wagon:

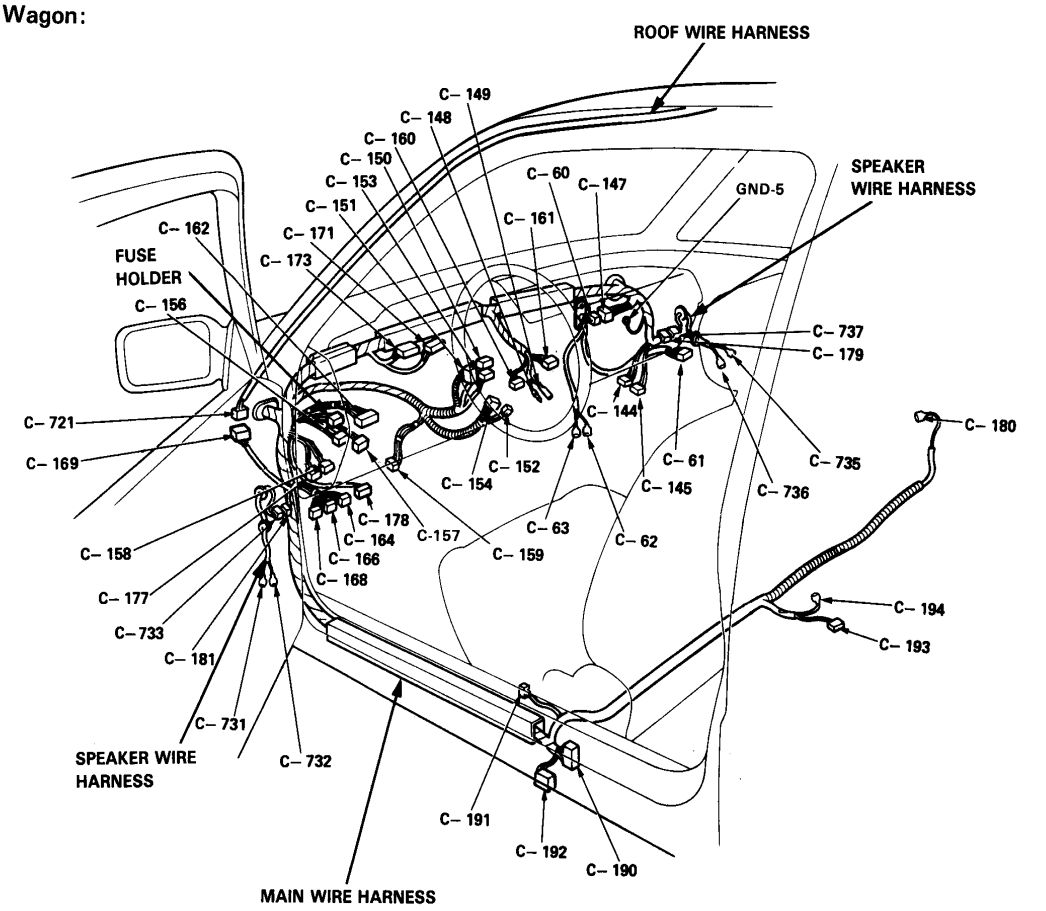
ROOF WIRE HARNESS
C-149
C-148
C-160
C-150
C-153
C-151
C-171
C-173
C-162
FUSE HOLDER
C-156
C-60
C-147
C-161
GND-5
SPEAKER WIRE HARNESS
C-737
C-179
C-721
C-169
C-144
C-180
C-152
C-154
C-61
C-145
C-735
C-736
C-178
C-164
C-157
C-63
C-62
C-159
C-166
C-168
C-158
C-177
C-733
C-181
C-194
C-193
C-731
SPEAKER WIRE HARNESS
C-732
C-191
C-192
C-190
MAIN WIRE HARNESS

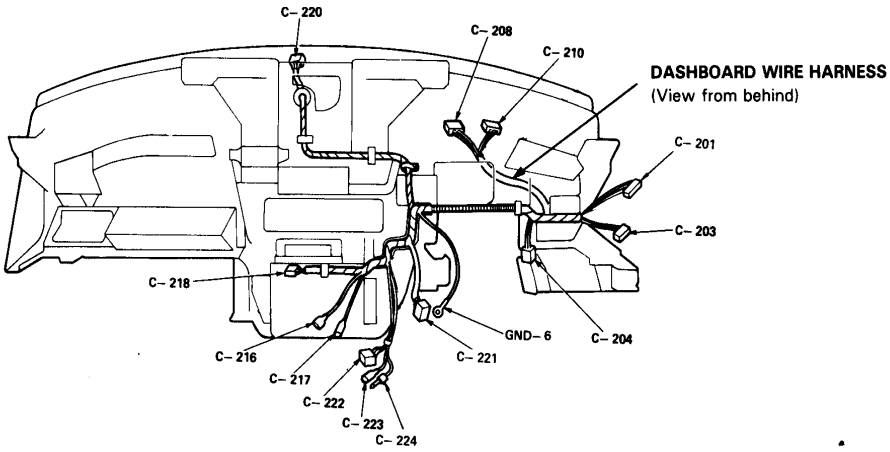
C-220
C-208
C-210
DASHBOARD WIRE HARNESS
(View from behind)
C-201
C-203
C-218
GND-6
C-204
C-216
C-221
C-217
C-222
C-223
C-224

(cont'd)

Harness, Fuses, and Wiring Diagrams

Connector and Wire Harness Location (cont'd)

Wagon:

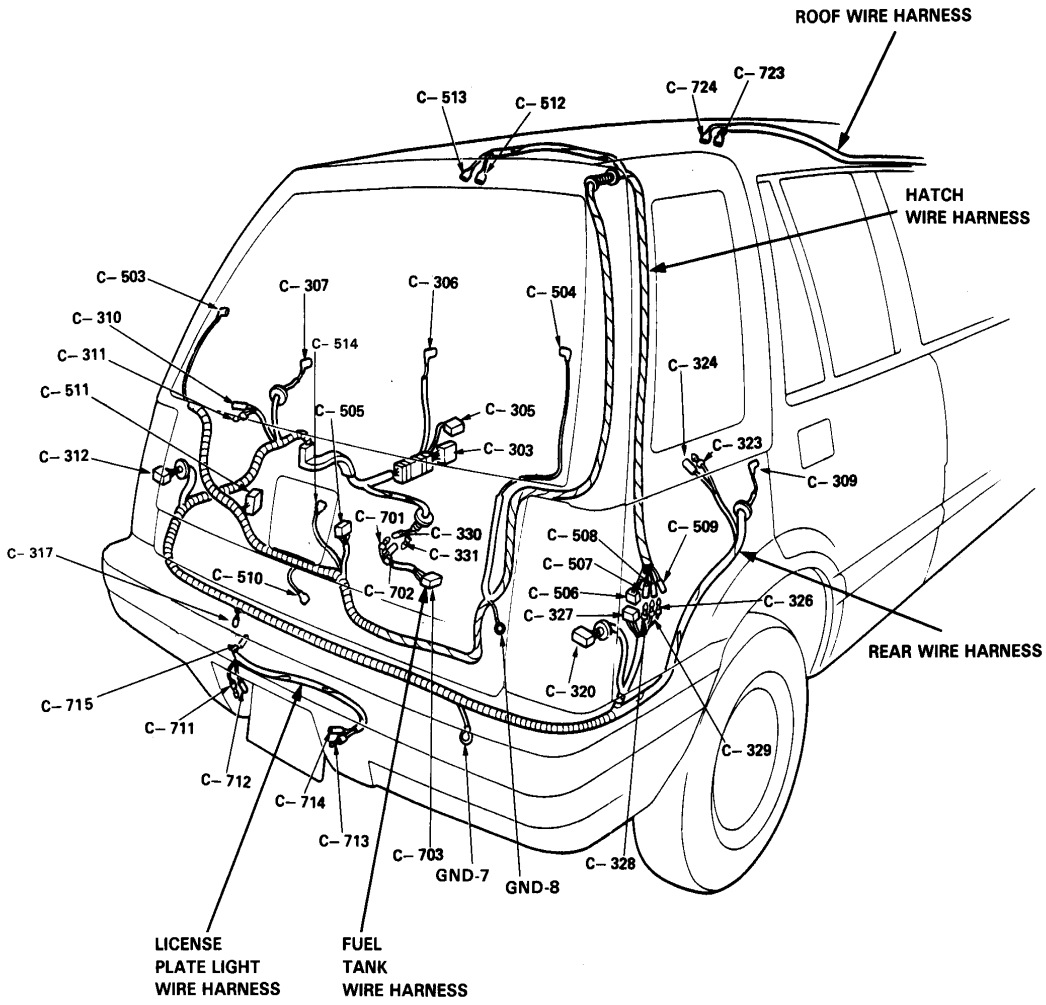

Connector Directory

Hatchback, 4-Door Sedan:

Engine Wire Harness (Carbureted Engine)

TERMINAL AND CONNECTOR NO.	NUMBER OF PINS	LOCATION	DESTINATION	REMARK
C- 1	3	Center engine compartment	To Alternator	
C- 3		Center engine compartment	To Oil pressure switch	
C- 4	2	Center engine compartment	To Carburetor solenoid	
C- 5		Center engine compartment	To Automatic choke heater	
C- 6		Center engine compartment	To Air temperature switch	
C- 7		Center engine compartment	To Air temperature switch	
C- 8		Center engine compartment	To Back-up light switch	M/T
C- 9		Center engine compartment	To Back-up light switch	M/T
C-10		Center engine compartment	To Starter motor	
C-11		Center engine compartment	To Temperature unit	
C-12		Center engine compartment	To Thermoswitch B	At the cylinder block 1500 M/T
C-13		Center engine compartment	To Thermoswitch B	At the cylinder block 1500 M/T
C-14		Center engine compartment	To Thermoswitch A	At the cylinder head
C-15		Center engine compartment	To Thermoswitch A	At the cylinder head
C-16	1	Center engine compartment	To Oxygen sensor	1500
C-28	1	Right center engine compartment	To Main wire harness (C-132)	1500 Carb.
C-29	6	Right center engine compartment	To Main wire harness (C-135)	1500
C-30	6	Right center engine compartment	To Main wire harness (C-136)	1500 A/T
C-31	4	Right center engine compartment	To Main wire harness (C-133)	1300 M/T. 1500 A/T
C-32	8	Right center engine compartment	To Main wire harness (C-134)	1300 M/T
C-33	8	Right center engine compartment	To Main wire harness (C-137)	1500 M/T
T-1		Center engine compartment	To Alternator	
T-2		Center engine compartment	To Main fuse box	
GND-1		Center engine compartment	To Engine ground	1500

Engine Wire Harness (Fuel-injected Engine)

TERMINAL AND CONNECTOR NO.	NUMBER OF PINS	LOCATION	DESTINATION	REMARK
C-3		Center engine compartment	To Oil pressure switch	
C-8		Center engine compartment	To Back-up light switch	
C-9		Center engine compartment	To Back-up light switch	
C-10		Center engine compartment	To Starter motor	
C-11		Center engine compartment	To Temperature unit	
C-16	1	Center engine compartment	To Oxygen sensor	
C-17	4	Center engine compartment	To Alternator	
C-18	2	Center engine compartment	To Water temperature sensor	
C-19	3	Center engine compartment	To Throttle angle sensor	
C-20	4	Center engine compartment	To Crank angle sensor	
C-21	2	Center engine compartment	To No. 4 fuel injector	
C-22	2	Center engine compartment	To No. 3 fuel injector	
C-23	2	Center engine compartment	To No. 2 fuel injector	
C-24	2	Center engine compartment	To No. 1 fuel injector	

(cont'd)

Harness, Fuses, and Wiring Diagrams

Connector Directory

Engine Wire Harness (Fuel-injected Engine)

TERMINAL AND CONNECTOR NO.	NUMBER OF PINS	LOCATION	DESTINATION	REMARK
C-25	2	Center engine compartment	To Intake air temperature sensor	
C-26	6	Left rear engine compartment	To Resistor	
C-27	6	Left rear engine compartment	To Main wire harness (C-115)	
C-34	8	Right center engine compartment	To Main wire harness (C-138)	
C-35	14	Right center engine compartment	To Main wire harness (C-139)	
T-1		Center engine compartment	To Alternator	
T-2		Right center engine compartment	To Main fuse box	
GND-1		Center engine compartment	To Engine ground	

A/C Wire Harness

TERMINAL AND CONNECTOR NO.	NUMBER OF PINS	LOCATION	DESTINATION	REMARK
C-51		Left front engine compartment	To A/C pressure switch wire harness (C-741)	A/C
C-52		Left front engine compartment	To A/C pressure switch wire harness (C-742)	A/C
C-53		Center rear engine compartment	To A/C idle control solenoid valve	A/C
C-54		Front engine compartment	To A/C compressor	A/C
C-55	2	Front engine compartment	To A/C condenser fan motor	A/C
C-56	4	Right front engine compartment	To Diode	A/C
C-57	4	Right front engine compartment	To A/C relay	A/C
C-58	4	Right front engine compartment	To Clutch relay	A/C
C-59	4	Right front engine compartment	To Condenser fan realy	A/C (PGM-FI)
C-60	2	Right front engine compartment	To Main wire harness (C-123)	A/C (PGM-FI)
C-61	2	Right front engine compartment	To Cooling fan motor	A/C (PGM-FI)
C-62		Under dash, Right side	To Thermostat	A/C
C-63		Under dash, Right side	To Thermostat	A/C
C-64	6	Under dash, Right side	To A/C delay unit	A/C
C-65	6	Under dash, Right side	To Main wire harness (C-147)	A/C
GND-4		Right front engine compartment	To Body ground	

Main Wire Harness

TERMINAL AND CONNECTOR NO.	NUMBER OF PINS	LOCATION	DESTINATION	REMARK
C-101	2	Left front engine compartment	To Left turn signal	
C-102	3	Left front engine compartment	To Left side marker light	
C-103		Left front engine compartment	To Left horn	
C-104		Left front engine compartment	To Left horn	
C-105	2	Left front engine compartment	To Windshield washer motor	Without power steering
C-106	2	Left front engine compartment	To Rear washer motor	Hatchback
C-107	3	Left front engine compartment	To Left headlight	
C-108	6	Left center engine compartment	To No.2 control box	1500 Carb.
	4	Left center engine compartment	To No. 2 control box	1500 Carb. (P/S)
	8	Left center engine compartment	To No. 2 control box	PGM-FI
C-109	4	Left center engine compartment	To No.2 control box	PGM-FI
C-110	2	Left center engine compartment	To Frequency solenoid valve	Power steering
C-111	2	Left center engine compartment	To Ignition coil	PGM-FI
C-112	1	Left center engine compartment	To Condenser	PGM-FI
C-114	2	Right front engine compartment	To Windshield washer motor	With power steering
C-115	6	Left center engine compartment	To Engine wire harness (C-27)	PGM-FI
C-116		Left rear engine compartment	To Brake fluid level switch	
C-117		Left rear engine compartment	To Brake fluid level switch	
C-118	2	Left rear engine compartment	To Power steering switch	Power steering
C-119		Right front engine compartment	To Fan switch	
C-120		Right front engine compartment	To Fan switch	
C-121		Right front engine compartment	To Right horn	
C-122		Right front engine compartment	To Right horn	
C-123	2	Right front engine compartment	To Radiator cooling fan motor (C-60)	
C-124	2	Right front engine compartment	To Right turn signal	
C-125	3	Right front engine compartment	To Right side marker light	
C-126	3	Right front engine compartment	To Right headlight	
C-127	2	Right center engine compartment	To Ignition coil	Carb.
C-128	1	Right center engine compartment	To Condenser	Carb.
C-129	2	Right center engine compartment	To Air temperature switch	Carb.
C-130	4	Right center engine compartment	To Radiator fan relay	Carb.
C-131	1	Right center engine compartment	To Hazard fuse	Battery positive terminal

(cont'd)

Harness, Fuses, and Wiring Diagrams

Connector Directory (cont'd)

Hatchback, 4-Door Sedan:

Main Wire Harness

TERMINAL AND CONNECTOR NO.	NUMBER OF PINS	LOCATION	DESTINATION	REMARK
C-132	1	Right rear engine compartment	To Engine wire harness (C-28)	1500 Carb.
C-133	4	Right rear engine compartment	To Engine wire harness (C-31)	1300 M/T, 1500A/T
C-134	8	Right rear engine compartment	To Engine wire harness (C-32)	1300 M/T
C-135	6	Right rear engine compartment	To Engine wire harness (C-29)	1500 M/T
C-136	6	Right rear engine compartment	To Engine wire harness (C-30)	1500 A/T
C-137	8	Right rear engine compartment	To Engine wire harness (C-33)	1500 M/T
C-138	8	Right center engine compartment	To Engine wire harness (C-34)	PGM-FI
C-139	14	Right center engine compartment	To Engine wire harness (C-35)	FGM-FI
C-140	5	Right rear engine compartment	To Windshield wiper motor	
C-141	6	Right rear engine compartment	To No.1 control box	1500 Carb.
C-142	8	Right rear engine compartment	To No.1 control box	1500 Carb.
C-143	8	Right rear engine compartment	To No.1 control box	1300 M/T
C-144	3	Right rear engine compartment	To Air pressure sensor	PGM-FI
C-145	2	Under dash, Right side	To Blower motor	
C-146	4	Under dash, Right side	To Blower resistor	
C-147	6	Under dash, Right side	To A/C wire harness (C-65)	A/C
C-150	8	Under dash, Left side	To Combination switch	
C-151	14	Under dash, Left side	To Combination switch	
C-152	2	Under dash, Left side	To Key switch	
C-153	6	Under dash, Left side	To Rear wiper/washer switch	Hatchback
C-154	6	Under dash, Left side	To Ignition switch	
C-156	7	Under dash, Left side	To Fuse box	
C-157	14	Under dash, Left side	To Fuse box	
C-158	8	Under dash, Left side	To Fuse box	
C-159	2	Under dash, Left side	To Brake light switch	
C-160	3	Under dash, Left side	To A/C switch	
C-161	6	Under dash, Left side	To Blower switch	
C-162	24	Under dash, Left side	To Dashboard vire harness (C-202)	
C-164	4	Under dash, Left side	To Rear defroster relay	
C-166	8	Under dash, Left side	To Side marker light flasher unit	
C-168	4	Under dash, Left side	To Brake check relay	
C-169	8	Under dash, Left side	To PGM-FI Main relay	PGM-FI
C-171	16	Under dash, Left side	To Emission control unit	1500
C-172	14	Under dash, Left side	To Emission control unit	1300
C-173	8	Under dash, Left side	To Emission control unit	1500
C-174	6	Under dash, Left side	To Seat belt buzzer/timer	
C-175	2	Under dash, Left side	To Roof wire harness (C-721)	

TERMINAL AND CONNECTOR NO.	NUMBER OF PINS	LOCATION	DESTINATION	REMARK
C-177	2	Under dash, Left side	To Fuse box	
C-178	8	Under dash, Left side	To Radiator fan timer	Carb.
C-179		Right door area	To Right speaker wire harness (C-737)	
C-180		Right door area	To Right speaker wire harness (C-738)	
C-181		Left door area	To Left speaker wire harness (C-733)	
C-182		Left door area	To Left speaker wire harness (C-734)	
C-183	17	Right floor	To PGM-FI control unit	PGM-FI
C-184	20	Right floor	To PGM-FI control unit	PGM-FI
C-185	16	Right floor	To PGM-FI control unit	PGM-FI
C-190	20	Left floor	To Rear wire harness (C-303)	
C-192	1	Left floor	To Rear wire harness (C-305)	
C-193	2	Center floor	To Seat belt switch	
C-194		Center floor	To Parking switch	
C-195	10	Center floor	To Neutral/safety switch	A/T
C-196	2	Center floor	To Back-up light switch	A/T
C-197	2	Center floor	To Shift indicator light	A/T
T-101		Right engine compartment	To Main fuse	
T-102		Right engine compartment	To Main fuse	
T-103		Right engine compartment	To Main fuse	
GND-2		Left front engine compartment	To Body ground	
GND-3		Right front engine compartment	To Body ground	
GND-5		Under dash, Right side	To Body ground	

Dashboard Wire Harness

TERMINAL AND CONNECTOR NO.	NUMBER OF PINS	LOCATION	DESTINATION	REMARK
C-202	24	Under dash, Left side	To Main harness (C-162)	
C-203	8	Under dash, Left side	To Fuse box	
C-204	3	Under dash, Left side	To Dashlight brightness controller	
C-205		Under dash, Left side	To Rear defroster switch	
C-206		Under dash, Left side	To Rear defroster switch	
C-207	4	Under dash, Left side	To Rear defroster switch	
C-208	12	Under dash, Left side	To Gauge	
C-209	6	Under dash, Left side	To Gauge	
C-210	5	Under dash, Left side	To Gauge	
C-212		Under dash, Left side	To Heater control panel illumination	
C-216		Under dash, Left side	To Cigarette lighter	
C-217		Under dash, Left side	To Cigarette lighter	
C-218	16	Under dash, Left side	To Radio	
C-219		Under dash, Left side	To Heater control panel illumination	
C-220	6	Under dash, Left side	To Clock	
GND-6		Under dash, Left side	To Body ground	

(cont'd)

Harness, Fuses, and Wiring Diagrams

Connector Directory (cont'd)

Hatchback, 4-Door Sedan:

Rear Wire Harness

TERMINAL AND CONNECTOR NO.	NUMBER OF PINS	LOCATION	DESTINATION	REMARK
C-303	20	Left floor	To Main wire harness (C-190)	1500
C-305	1	Left floor	To Main wire harness (C-192)	1500
C-306		Left door area	To Left front door switch	
C-307		Left rear door area	To Left rear door switch	4 Door
C-308		Right door area	To Right front door switch	
C-309		Right rear door area	To Right rear door switch	
C-310		Left trunk area	To Left rear speaker	
C-311		Left trunk area	To Left rear speaker	
C-312	6	Left trunk area	To Left taillight	
C-313	4	Left trunk area	To Left taillight	4 Door
C-317	2	Center trunk area	To License plate light harness (C-715)	
C-318	2	Center trunk area	To High mount stop light	4 Door
C-319		Center trunk area	To Trunk light switch	
C-320	6	Right trunk area	To Right taillight	
C-321	4	Right trunk area	To Right taillight	4 Door
C-323		Right trunk area	To Right rear speaker	
C-324		Right trunk area	To Right rear speaker	
C-325		Right trunk area	To Hatch light	Hatchback
C-326		Right trunk area	To Hatch light	Hatchback
C-327	4	Right trunk area	To Hatch wire harness (C-506)	Hatchback
C-328	2	Right trunk area	To Hatch wire harness (C-507)	Hatchback
C-330		Right trunk area	To Fuel tank wire harness (C-701)	
C-331		Fuel tank area	To Fuel tank wire harness (C-702)	
C-332		Luggage area	To Trunk light	4 Door Sedan
C-333		Luggage area	To Trunk light	4 Door Sedan
C-334		Left rear window area	To Rear window defroster	4 Door Sedan
GND-7		Right trunk area	To Body ground	

Hatch Wire Harness (Hatchback only)

TERMINAL AND CONNECTOR NO.	NUMBER OF PINS	LOCATION	DESTINATION	REMARK
C-503		Hatch area	To Defroster	
C-504		Hatch area	To Defroster	
C-505	4	Hatch area	To Rear wiper motor	
C-506	4	Right trunk area	To Rear wire harness (C-327)	
C-507	2	Right trunk area	To Rear wire harness (C-328)	
C-508		Center trunk area	To High mount stop light	Hatchback

Fuel Tank Wire Harness

TERMINAL AND CONNECTOR NO.	NUMBER OF PINS	LOCATION	DESTINATION	REMARK
C-701		Fuel tank area	To Rear wire harness (C-330)	
C-702		Fuel tank area	To Rear wire harness (C-331)	
C-703	2	Fuel tank area	To Fuel unit	

License Plate Light Wire Harness

TERMINAL AND CONNECTOR NO.	NUMBER OF PINS	LOCATION	DESTINATION	REMARK
C-711		Rear bumper area	To License plate light	
C-712		Rear bumper area	To License plate light	
C-713		Rear bumper area	To License plate light	
C-714		Rear bumper area	To License plate light	
C-715	2	Rear bumper area	To Rear wire harness (C-317)	

Roof Wire Harness

TERMINAL AND CONNECTOR NO.	NUMBER OF PINS	LOCATION	DESTINATION	REMARK
C-721	2	Under dash, Left side	To Main wire harness (C-175)	
C-723	2	Roof area	To Dome light	

(cont'd)

Harness, Fuses, and Wiring Diagrams

Connector Directory (cont'd)

Hatchback, 4-Door Sedan:

Door Speaker Wire Harness

TERMINAL AND CONNECTOR NO.	NUMBER OF PINS	LOCATION	DESTINATION	REMARK
C-731		Left door area	To Left door speaker	
C-732		Left door area	To Left door speaker	
C-733		Left door area	To Main wire harness (C-181)	
C-734		Left door area	To Main wire harness (C-182)	
C-735		Right door area	To Right door speaker	
C-736		Right door area	To Right door speaker	
C-737		Right door area	To Main wire harness (C-179)	
C-738		Right door area	To Main wire harness (C-180)	

A/C Pressure Switch Wire Harness

TERMINAL AND CONNECTOR NO.	NUMBER OF PINS	LOCATION	DESTINATION	REMARK
C-741		Left front engine compartment	To A/C wire harness (C-51)	
C-742		Left front engine compartment	To A/C wire harness (C-52)	
C-743		Left front engine compartment	To A/C pressure switch	
C-744		Left front engine compartment	To A/C pressure switch	

Rear Defroster Ground Wire

TERMINAL AND CONNECTOR NO.	NUMBER OF PINS	LOCATION	DESTINATION	REMARK
C-751		Right rear window area	To Rear window defroster	4 Door Sedan
GND-9		Right rear window area	To Body ground	4 Door Sedan

Wagon:

Engine Wire Harness

TERMINAL AND CONNECTOR NO.	NUMBER OF PINS	LOCATION	DESTINATION	REMARK
C- 1	3	Center engine compartment	To Alternator	
C- 3		Center engine compartment	To Oil pressure switch	
C- 4	2	Center engine compartment	To Carburetor solenoid	
C- 5		Center engine compartment	To Automatic choke heater	
C- 6		Center engine compartment	To Air temperature switch	
C- 7		Center engine compartment	To Air temperature switch	
C- 8		Center engine compartment	To Back-up light switch	
C- 9		Center engine compartment	To Back-up light switch	
C-10		Center engine compartment	To Starter motor	
C-11		Center engine compartment	To Temperature unit	
C-12		Center engine compartment	To Thermoswitch B	M/T only
C-13		Center engine compartment	To Thermoswitch B	M/T only
C-14		Center engine compartment	To Thermoswitch A	At the cylinder head
C-15		Center engine compartment	To Thermoswitch A	At the cylinder head
C-16	1	Center engine compartment	To Oxygen sensor	
C-28	1	Right center engine compartment	To Main wire harness (C-131)	
C-29	6	Right center engine compartment	To Main wire harness (C-134)	M/T
C-30	4	Right center engine compartment	To Main wire harness (C-133)	A/T
C-31	8	Right center engine compartment	To Main wire harness (C-135)	M/T
C-32	6	Right center engine compartment	To Main wire harness (C-136)	A/T
T-1		Center engine compartment	To Alternator	
T-2		Right center engine compartment	To Main fuse box	
GND-1		Center engine compartment	To Engine ground	

A/C Wire Harness

TERMINAL AND CONNECTOR NO.	NUMBER OF PINS	LOCATION	DESTINATION	REMARK
C-51		Left front engine compartment	To A/C pressure switch wire harness (C-741)	A/C
C-52		Left front engine compartment	To A/C pressure switch wire harness (C-742)	A/C
C-53		Center rear engine compartment	To A/C idle control solenoid valve	A/C
C-54		Front engine compartment	To A/C compressor	A/C
C-55	2	Front engine compartment	To Condenser fan motor	A/C
C-56	4	Right front engine compartment	To Diode	A/C
C-57	4	Right front engine compartment	To A/C relay	A/C
C-58	4	Right front engine compartment	To Clutch relay	A/C
C-60	6	Under dash, Right side	To Main wire harness (C-147)	A/C
C-61	6	Under dash, Right side	To A/C delay timer	A/C
C-62		Under dash, Right side	To Thermostat	A/C
C-63		Under dash, Right side	To Thermostat	A/C
GND-4		Right front engine compartment	To Body ground	

(cont'd)

Harness, Fuses, and Wiring Diagrams

Connector Directory (cont'd)

Wagon:

Main Wire Harness

TERMINAL AND CONNECTOR NO.	NUMBER OF PINS	LOCATION	DESTINATION	REMARK
C-101	2	Left front engine compartment	To Left turn signal	
C-102	3	Left front engine compartment	To Left side marker light	
C-103		Left front engine compartment	To Left horn	
C-104		Left front engine compartment	To Left horn	
C-105	2	Left front engine compartment	To Windshield washer motor	
C-106	2	Left front engine compartment	To Rear washer motor	
C-107	3	Left front engine compartment	To Left headlight	
C-108	6	Left center engine compartment	To No.2 control box	
C-114	6	Left rear engine compartment	To Windshield wiper motor	
C-116		Left rear engine compartment	To Brake fluid level switch	
C-117		Left rear engine compartment	To Brake fluid level switch	
C-119		Right front engine compartment	To Fan switch	
C-120		Right front engine compartment	To Fan switch	
C-121		Right front engine compartment	To Right horn	
C-122		Right front engine compartment	To Right horn	
C-123	2	Right front engine compartment	To Radiator cooling fan motor	
C-124	2	Right front engine compartment	To Right turn signal	
C-125	3	Right front engine compartment	To Right side marker light	
C-126	3	Right front engine compartment	To Right headlight	
C-127		Right center engine compartment	To Condenser	
C-128	2	Right center engine compartment	To Air temperature switch	
C-129	4	Right center engine compartment	To Radiator fan relay	
C-130	1	Right center engine compartment	To Hazard fuse	Battery positive terminal
C-131	1	Right rear engine compartment	To Engine wire harness (C-28)	
C-133	4	Right rear engine compartment	To Engine wire harness (C-30)	A/T
C-134	6	Right rear engine compartment	To Engine wire harness (C-29)	M/T
C-135	4	Right rear engine compartment	To Engine wire harness (C-31)	M/T
C-136	6	Right rear engine compartment	To Engine wire harness (C-32)	A/T
C-137	2	Right rear engine compartment	To Ignition coil	
C-140	6	Right rear engine compartment	To No.1 control box	
C-141	8	Right rear engine compartment	To No.1 control box	
C-144	2	Under dash, Right side	To Blower motor	
C-145	4	Under dash, Right side	To Blower resistor	

TERMINAL AND CONNECTOR NO.	NUMBER OF PINS	LOCATION	DESTINATION	REMARK
C-147	6	Under dash, Right side	To A/C wire harness (C-60)	
C-148		Under dash, Left side	To Heater control panel illumination	
C-149		Under dash, Left side	To Heater control panel illumination	
C-150	8	Under dash, Left side	To Combination switch	
C-151	14	Under dash, Left side	To Combination switch	
C-152	2	Under dash, Left side	To Key switch	
C-153	6	Under dash, Left side	To Rear wiper/washer switch	
C-154	6	Under dash, Left side	To Ignition switch	
C-156	7	Under dash, Left side	To Fuse box	
C-157	14	Under dash, Left side	To Fuse box	
C-158	8	Under dash, Left side	To Fuse box	
C-159	2	Under dash, Left side	To Brake light switch	
C-160	3	Under dash, Left side	To A/C switch	
C-161	6	Under dash, Left side	To Blower switch	
C-162	24	Under dash, Left side	To Dashboard wire harness (C-201)	
C-164	4	Under dash, Left side	To Rear defroster relay	
C-166	8	Under dash, Left side	To Side marker control unit	
C-168	4	Under dash, Left side	To Brake check relay	
C-169	2	Under dash, Left side	To Roof wire harness (C-721)	
C-171	16	Under dash, Left side	To Emission control unit	
C-173	8	Under dash, Left side	To Emission control unit	
C-177	2	Under dash, Left side	To Fuse box	
C-178	8	Under dash, Left side	To Radiator fan timer	
C-179	2	Right door area	To Right speaker wire harness (C-737)	
C-180		Right door area	To Right front door switch	
C-181	2	Left door area	To Left speaker wire harness (C-733)	
C-190	20	Left floor	To Rear wire harness (C-303)	
C-191	2	Left floor	To Tailgate opener switch	
C-192	1	Left floor	To Rear wire harness (C-305)	
C-193	2	Center floor	To Seat belt switch	
C-194		Center floor	To Parking switch	
T-101		Right center engine compartment	To Main Fuse box	
T-102		Right center engine compartment	To Main Fuse box	
T-103		Right center engine compartment	To Main Fuse box	
GND-2		Left front engine compartment	To Body ground	
GND-3		Right front engine compartment	To Body ground	
GND-5		Under dash, Right side	To Body ground	

(cont'd)

Harness, Fuses, and Wiring Diagrams

Connector Directory (cont'd)

Wagon:

Dashboard Wire Harness

TERMINAL AND CONNECTOR NO.	NUMBER OF PINS	LOCATION	DESTINATION	REMARK
C-201	24	Under dash, Left side	To Main wire harness (C-162)	
C-203	8	Under dash, Left side	To Fuse box	
C-204	3	Under dash, Left side	To Dashlight brightness controller	
C-208	18	Under dash, Left side	To Gauge	
C-210	5	Under dash, Left side	To Gauge	
C-216		Center under dash	To Cigarette lighter	
C-217		Center under dash	To Cigarette lighter	
C-218	16	Center under dash	To Radio	
C-220	6	Center under dash	To Clock	
C-221	6	Center under dash	To Seat belt buzzer/timer	
C-222	4	Center under dash	To Rear defroster switch	
C-223		Center under dash	To Rear defroster switch	
C-224		Center under dash	To Rear defroster switch	
GND-6		Under dash, Left side	To Body ground	

Rear Wire Harness

TERMINAL AND CONNECTOR NO.	NUMBER OF PINS	LOCATION	DESTINATION	REMARK
C-303	20	Left floor	To Main wire harness (C-190)	
C-305	1	Left floor	To Main wire harness (C-192)	
C-306		Left door area	To Left front door switch	
C-307		Left door area	To Left rear door switch	
C-309		Right door area	To Right rear door switch	
C-310		Left trunk area	To Left rear speaker	
C-311		Left trunk area	To Left rear speaker	
C-312	6	Left trunk area	To Left taillight	
C-317	2	Center trunk area	To License plate light wire harness (C-715)	
C-320	6	Right trunk area	To Right taillight	
C-323		Right trunk area	To Right rear speaker	
C-324		Right trunk area	To Right rear speaker	
C-326		Right trunk area	To Hatch wire harness (C-509)	
C-327	6	Right trunk area	To Hatch wire harness (C-506)	
C-328		Right trunk area	To Hatch wire harness (C-507)	
C-329		Right trunk area	To Hatch wire harness (C-508)	
C-330		Fuel tank area	To Fuel tank wire harness (C-701)	
C-331		Fuel tank area	To Fuel tank wire harness (C-702)	
GND-7		Right trunk area	To Body ground	

Hatch Wire Harness

TERMINAL AND CONNECTOR NO.	NUMBER OF PINS	LOCATION	DESTINATION	REMARK
C-503		Hatch area	To Rear defroster	
C-504		Hatch area	To Rear defroster	
C-505	4	Hatch area	To Rear wiper motor	
C-506	6	Right trunk area	To Rear wire harness (C-327)	
C-507		Right trunk area	To Rear wire harness (C-328)	
C-508		Right trunk area	To Rear wire harness (C-329)	
C-509		Right trunk area	To Rear wire harness (C-326)	
C-510		Hatch area	To Tailgate switch	
C-511		Hatch area	To Tailgate opener	
C-512		Hatch area	To Trunk light	
C-513		Hatch area	To Trunk light	
C-514	2	Hatch area	To High mount stop light	
GND-8		Right Trunk	To Body ground	

Fuel Tank Wire Harness

TERMINAL AND CONNECTOR NO.	NUMBER OF PINS	LOCATION	DESTINATION	REMARK
C-701		Fuel tank area	To Rear wire harness (C-330)	
C-702		Fuel tank area	To Rear wire harness (C-331)	
C-703	2	Fuel tank area	To Fuel unit	

License Plate Light Wire Harness

TERMINAL AND CONNECTOR NO.	NUMBER OF PINS	LOCATION	DESTINATION	REMARK
C-711		Rear bumper area	To License plate light	
C-712		Rear bumper area	To License plate light	
C-713		Rear bumper area	To License plate light	
C-714		Rear bumper area	To License plate light	
C-715	2	Rear bumper area	To Rear wire harness (C-317)	

(cont'd)

Harness, Fuses, and Wiring Diagrams

Connector Directory (cont'd)

Wagon:

Roof Wire Harness

TERMINAL AND CONNEC-TOR NO.	NUMBER OF PINS	LOCATION	DESTINATION	REMARK
C-721	2	Roof	To Main wire harness (C-169)	
C-723		Roof area	To Dome light	
C-724		Roof area	To Dome light	

Door Speaker Wire Harness

TERMINAL AND CONNEC-TOR NO.	NUMBER OF PINS	LOCATION	DESTINATION	REMARK
C-731		Left door area	To Left door speaker	
C-732		Lett door area	To Left door speaker	
C-733	2	Left door area	To Main wire harness (C-181)	
C-735		Right door area	To Right door speaker	
C-736		Right door area	To Right door speaker	
C-737	2	Right door area	To Main wire harness (C-179)	

A/C Pressure Switch Wire Harness

TERMINAL AND CONNEC-TOR NO.	NUMBER OF PINS	LOCATION	DESTINATION	REMARK
C-741		Left front engine compartment	To A/C wire harness (C-51)	
C-742		Left front engine compartment	To A/C wire harness (C-52)	
C-743		Left front engine compartment	To A/C pressure switch	
C-744		Left front engine compartment	To A/C pressure switch	

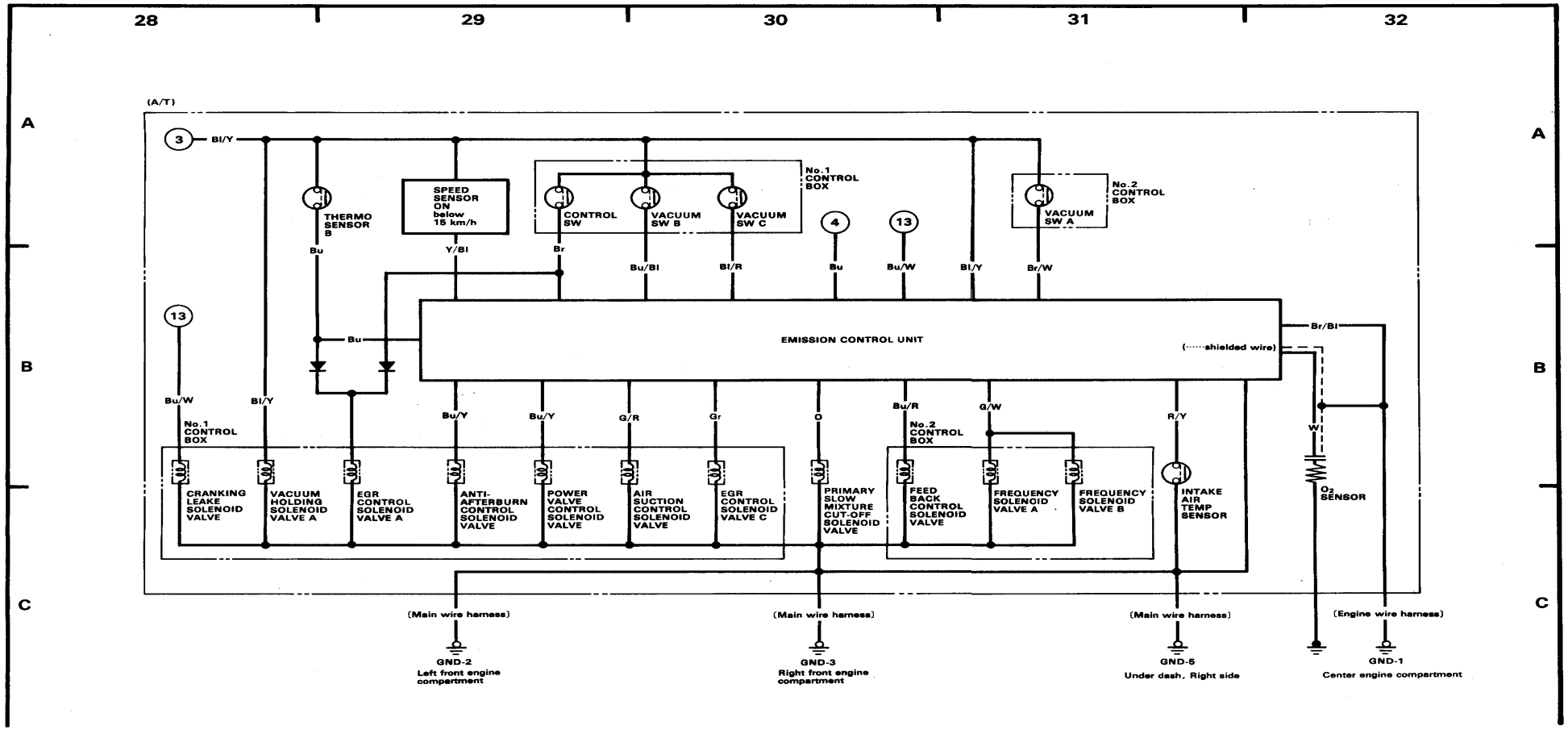

No.	Part	Location	Connection	Part	Location	Remark
③	EMISSION CONTROL UNIT, No.1/No.2 CONTROL BOX, THERMO SENSOR B, SPEED SENSOR	28-A	←	● 10A FUSE	3-A	
④	EMISSION CONTROL UNIT	30-A	←	IGNITION COIL	4-A	
⑬	CRANKING LEAK SOLENOID VALVE	28-B	←	● 10A FUSE	16-A	
	EMISSION CONTROL UNIT	30-A	←			

Fuel-Injected System Connectors

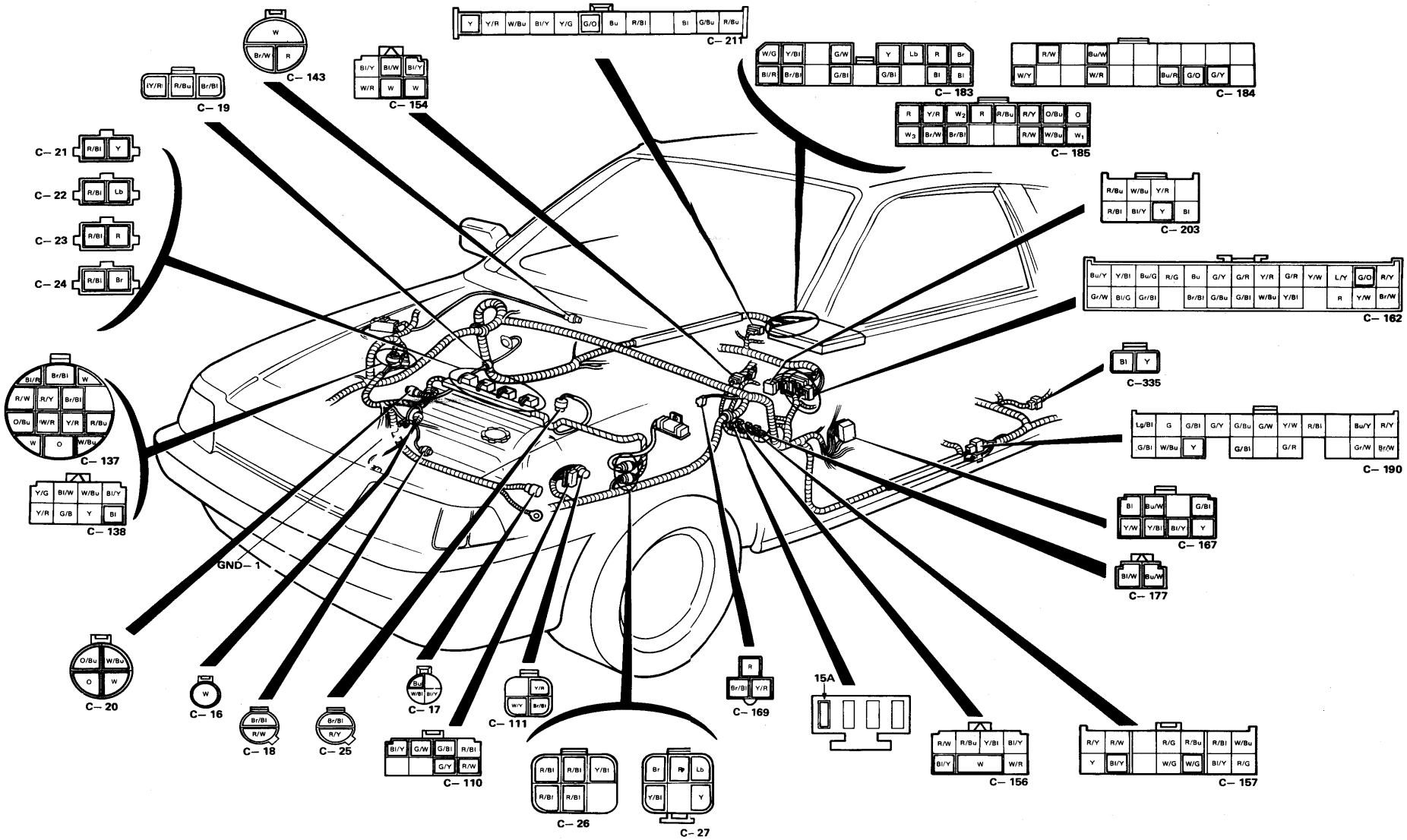

Fuel-Injected System Diagram

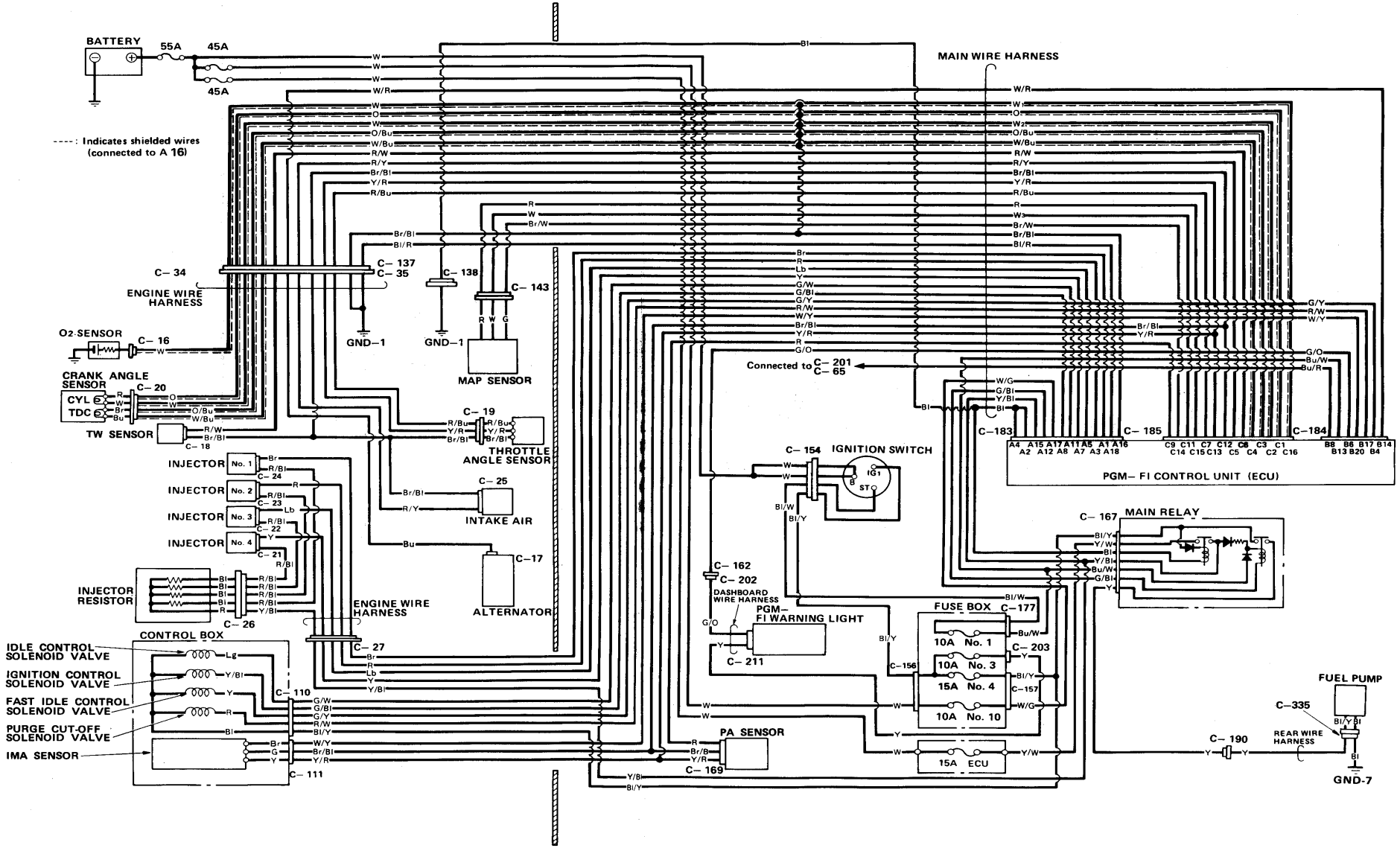

Hatchback and Sedan

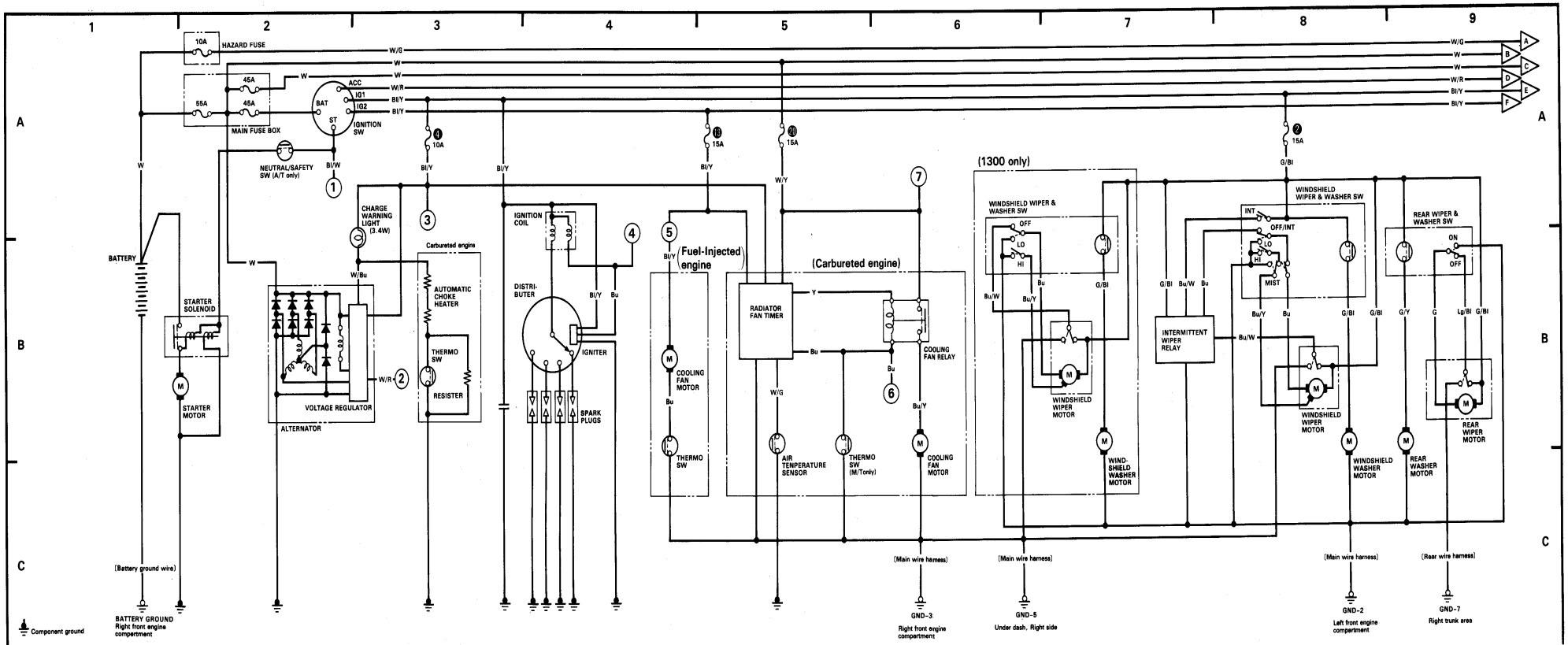

No.	Part	Location	Connection	Part	Location	Remark
①	IGNITION SW (ST)	2-A		● 10A FUSE	22-A	
②	VOLTAGE REGULATOR	3-B		PGM-FI ECU	31-A	
③	● 10A FUSE	3-A		PGM-FI MAIN RELAY	29-A	Fuel-Injected engine
				CONTROL BOX		
				EMISSION CONTROL UNIT	33-A	1300 Carb.
				No.1 CONTROL BOX		
				SPEED SENSOR		
				INTAKE AIR SENSOR		
				THERMO SENSOR A/B		
				EMISSION CONTROL UNIT	37-A	1500 Carb. (M/T)
				No.1/No.2 CONTROL BOX		
				THERMO SENSOR A/B		
				SPEED SENSOR		
				EMISSION CONTROL UNIT	41-A	1500 Carb. (A/T)
				No.1/No.2 CONTROL BOX		
				SPEED SENSOR		
				THERMO SENSOR B		
				P/S OIL PRESSURE SW		

No.	Part	Location	Connection	Part	Location	Remark
④	IGNITION COIL	4-A		A/C DELAY CONTROL UNIT	17-B	Sedan Carb. A/T
				TACHOMETER	22-A	
				EMISSION CONTROL UNIT	35-A	1300 Carb.
				EMISSION CONTROL UNIT	39-A	1500 Carb. M/T
				IDLE BOOST SOLENOID VALVE	41-B	1500 Carb. A/T
				EMISSION CONTROL UNIT	44-A	
⑤	● 15A FUSE	4-A		COOLING FAN RELAY	13-B	Fuel-Injected engine
				A/C CLUTCH RELAY, A/C DELAY CONTROL UNIT	17-B	Carbureted engine
⑥	COOLING FAN RELAY	6-B		A/C PRESSURE SW	16-B	Carbureted engine
				EMISSION CONTROL UNIT	36-A	1300 Carb.
				EMISSION CONTROL UNIT	39-A	1300 Carb. M/T
⑦	● 15A FUSE	6-A		A/C CONDENSER FAN RELAY	16-B	Carbureted engine

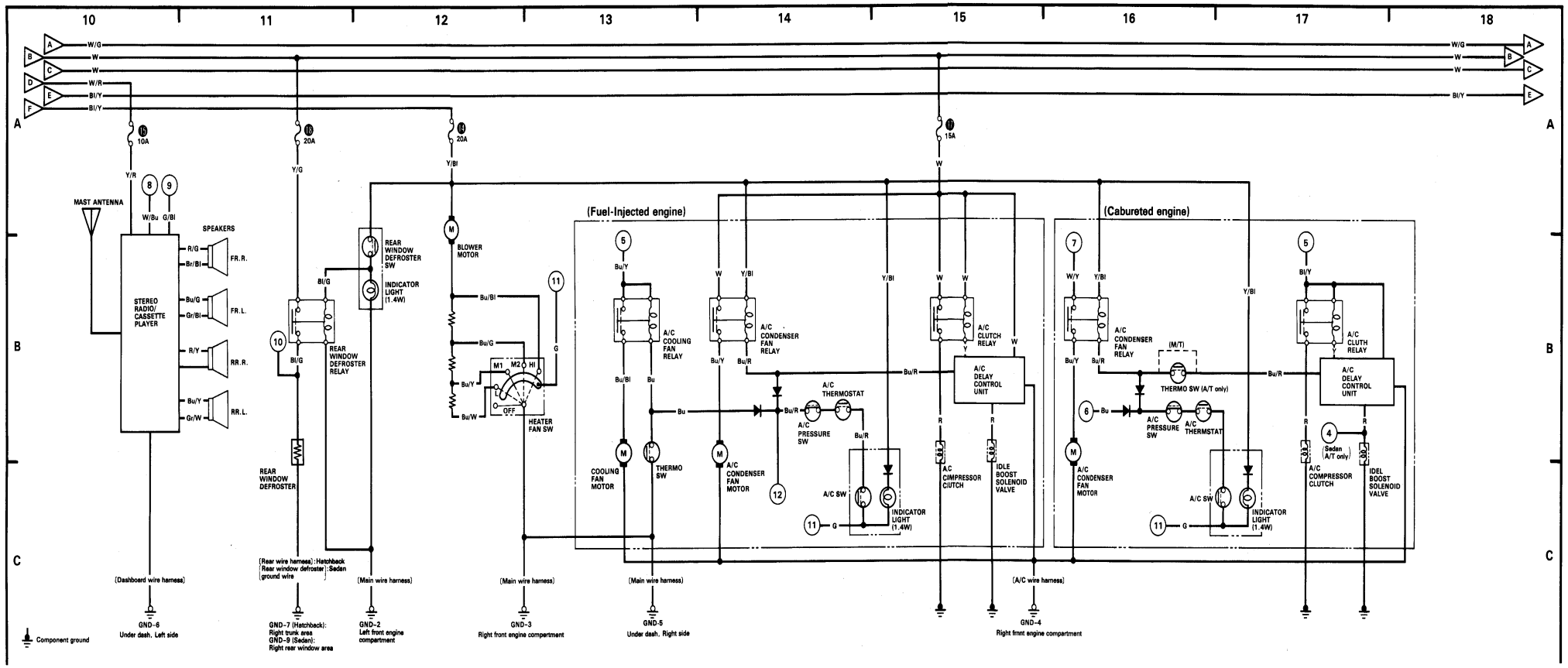

No.	Part	Location	Connection	Part	Location	Remark
⑧	STEREO RADIO/CASSETTE PLAYER	10-A		● 15A FUSE	19-A	
⑨	STEREO RADIO/CASSETTE PLAYER	10-A		LIGHTING SW	26-B	
⑩	REAR WINDOW DEFROSTER RELAY	11-B		EMISSION CONTROL UNIT	36-A	1300 Carb.
				EMISSION CONTROL UNIT	39-A	1500 Carb. M/T

No.	Part	Location	Connection	Part	Location	Remark
⑤	COOLING FAN RELAY	13-B		● 15A FUSE	4-A	
				A/C SW	14-C	Fuel-Injcted engine
⑪	HEATER FAN SW	13-B		A/C SW	16-C	Carbureed engine
				EMISSION CONTROL UNIT	36-A	1300 Crb.
				EMISSION CONTROL UNIT	39-A	1500 Crb. M/T
⑫	A/C PRESSURE SW	14-C		PGM-FI ECU	32-A	Fuel-Injcted engine

No.	Part	Location	Connection	Part	Location	Remark
④	A/C DELAY CONTROL UNIT	17-B		IGNITION COIL	4-A	
⑤	A/C CLUTCH RELAY, A/C DELAY CONTROL UNIT	17-B		● 15A FUSE	4-A	
⑥	A/C PRESSURE SW	16-B		COOLING FAN RELAY	6-B	Carbureted engine
⑦	A/C CONDENSER FAN RELAY	16-B		● 15A FUSE	6-A	Carbureted engine
⑪	A/C SW	16-C		HEATER FAN SW	13-B	

Hatchback and Sedan

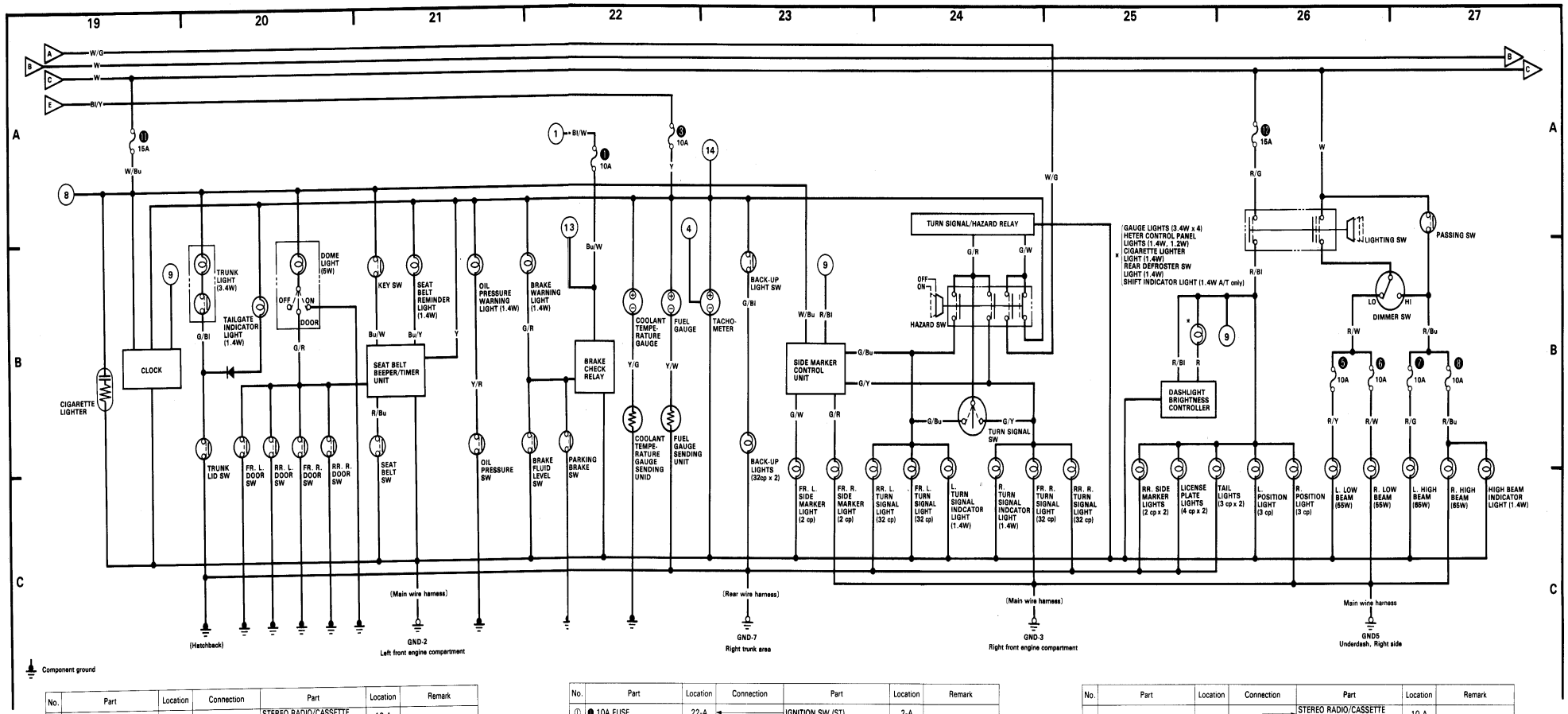

No.	Part	Location	Connection	Part	Location	Remark
⑤	● 15A FUSE	19-A	→	STEREO RADIO/CASSETTE PLAYER	10-A	
⑤	CLOCK	19-B	←	LIGHTING SW	26-B	

No.	Part	Location	Connection	Part	Location	Remark
①	● 10A FUSE	22-A	←	IGNITION SW (ST)	2-A	
④	TACHOMETER	22-A	←	IGNITION COIL	4-A	
⑤	SIDE MARKER CONTROL UNIT	23-B	←	LIGHTING SW	26-B	
⑬	● 10A FUSE	22-A	→	PGM-FI ECU	30-A	Fuel-Injected engine
			→	CRANKING LEAK SOLENOID VALVE	34-B	1300 Carb.
			→	CRANKING LEAK SOLENOID VALVE	37-B	1500 Carb. M/T
			→	CRANKING LEAK SOLENOID VALVE	41-B	1500 Carb. A/T
			→	EMISSION CONTROL UNIT	44-A	1500 Carb. A/T
⑭	● 10A FUSE	23-A	→	PGM-FI WARNING LIGHT	32-A	Fuel-Injected engine

No.	Part	Location	Connection	Part	Location	Remark
⑤	LIGHTING SW	26-B	→	STEREO RADIO/CASSETTE PLAYER	10-A	
			→	CLOCK	19-B	
			→	SIDE MARKER CONTROL UNIT	23-B	
			→	EMISSION CONTROL UNIT	36-A	1300 Carb.
			→	EMISSION CONTROL UNIT	40-A	1500 Carb. M/T

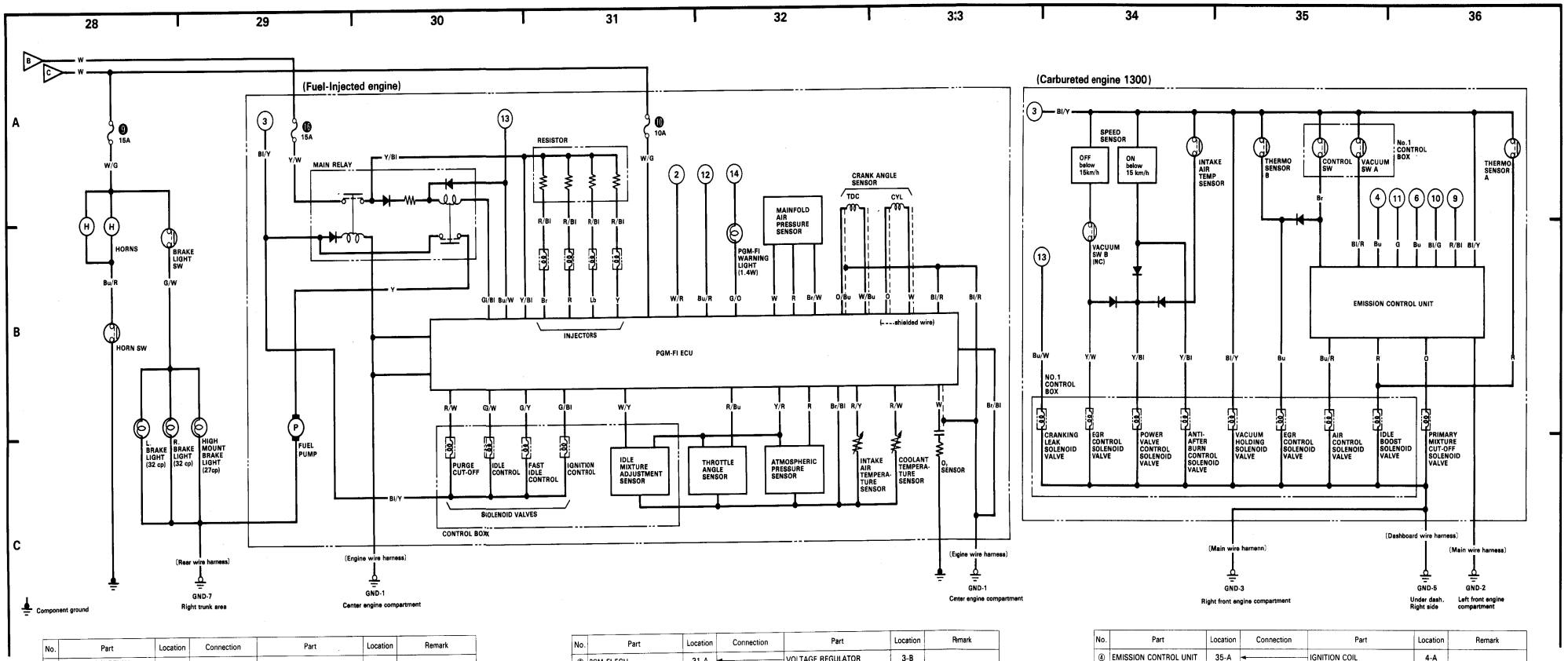

No.	Part	Location	Connection	Part	Location	Remark
③	PGM-FI MAIN RELAY, CONTROL BOX	29-A	←	● 10A FUSE	3-A	
⑬	PGM-FI ECU	30-A	←	● 10A FUSE	22-A	

No.	Part	Location	Connection	Part	Location	Remark
②	PGM-FI ECU	31-A	←	VOLTAGE REGULATOR	3-B	
③	EMISSION CONTROL UNIT, No.1 CONTROL BOX, SPEED SENSOR, INTAKE AIR SENSOR, THERMO SENSOR A/B	33-A	←	● 10A FUSE	3-A	
⑫	PGM-FI ECU	32-A	→	A/C PRESSURE SW	14-C	
⑬	PGM-FI WARNING LIGHT	32-A	←	● 10A FUSE	23-A	

No.	Part	Location	Connection	Part	Location	Remark
④	EMISSION CONTROL UNIT	35-A	←	IGNITION COIL	4-A	
⑥	EMISSION CONTROL UNIT	36-A	←	COOLING FAN RELAY	6-B	
⑨	EMISSION CONTROL USIT	36-A	←	LIGHTING SW	26-B	
⑩	EMISSION CONTROL UNIT	36-A	←	REAR WINDOW DEFROSTER RELAY	11-B	
⑪	EMISSION CONTROL UNIT	36-A	→	HEATER FAN SW	13-B	
⑬	CRANKING LEAK SOLENOID VALVE	34-B	←	● 10A FUSE	22-A	

Hatchback and Sedan

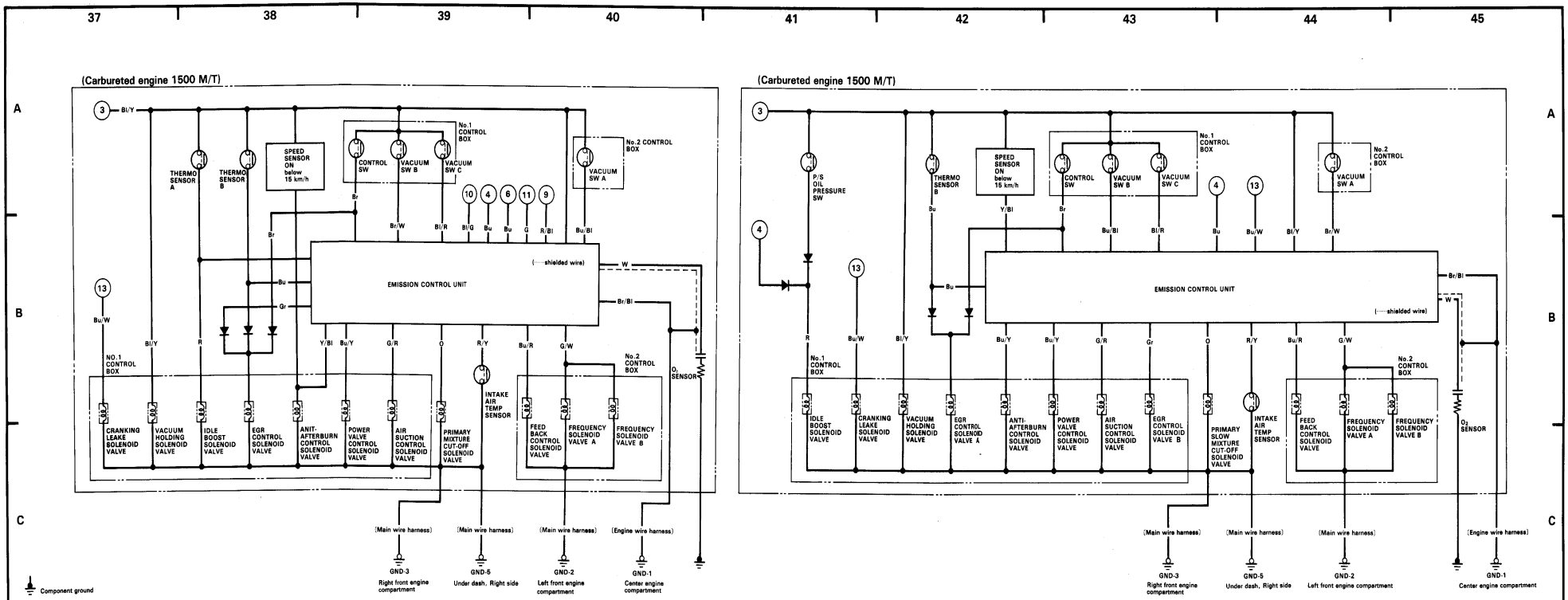

No.	Part	Location	Connection	Part	Location	Remark
③	EMISSION CONTROL UNIT, No.1/No.2 CONTROL BOX, THERMO SENSOR A/B, SPEED SENSOR	37-A	←	● 10A FUSE	3-A	
④	EMISSION CONTROL UNIT	39-A	←	IGNITION COIL	4-A	
⑤	EMISSION CONTROL UNIT	39-A	←	COOLING FAN RELAY	6-B	Carbureted engine
⑱	EMISSION CONTROL UNIT	39-A	←	REAR WINDOW DEROSTER RELAY	11-B	
⑪	EMISSION CONTROL UNIT	39-A	→	HEATER FAN SW	13-B	
⑬	CRANKING LEAK SOLENOID VALVE	37-B	←	● 10A FUSE	22-A	

No.	Part	Location	Connection	Part	Locatiion	Remark
③	EEMISSION CONTROL UNIT, No.1/No.2 CONTROL BOX, SPEED SENSOR, THERMO SENSOR B, P/S OIL PRESSURE SW	41-A	←	● 10A FUSE	3-A	
④	IDLE BOOST SOLENOID VALVE	41-B	←	IGNITION COIL	4-A	
⑤	EMISSION CONTROL UNIT	40-A	←	LIGHTING SW	26-B	
⑬	CRANKING LEAK SOLENOID VALVE	41-B	←	● 10A FUSE	22-A	

No.	Part	Location	Connection	Part	Location	Remark
④	EMISSION CONTROL UNIT	44-A	←	IGNITION COIL	4-A	
⑬	EMISSION CONTROL UNIT	44-A	←	● 10A FUSE	22-A	

Power Distribution

Fuse Box (Under the left side of the dash.)

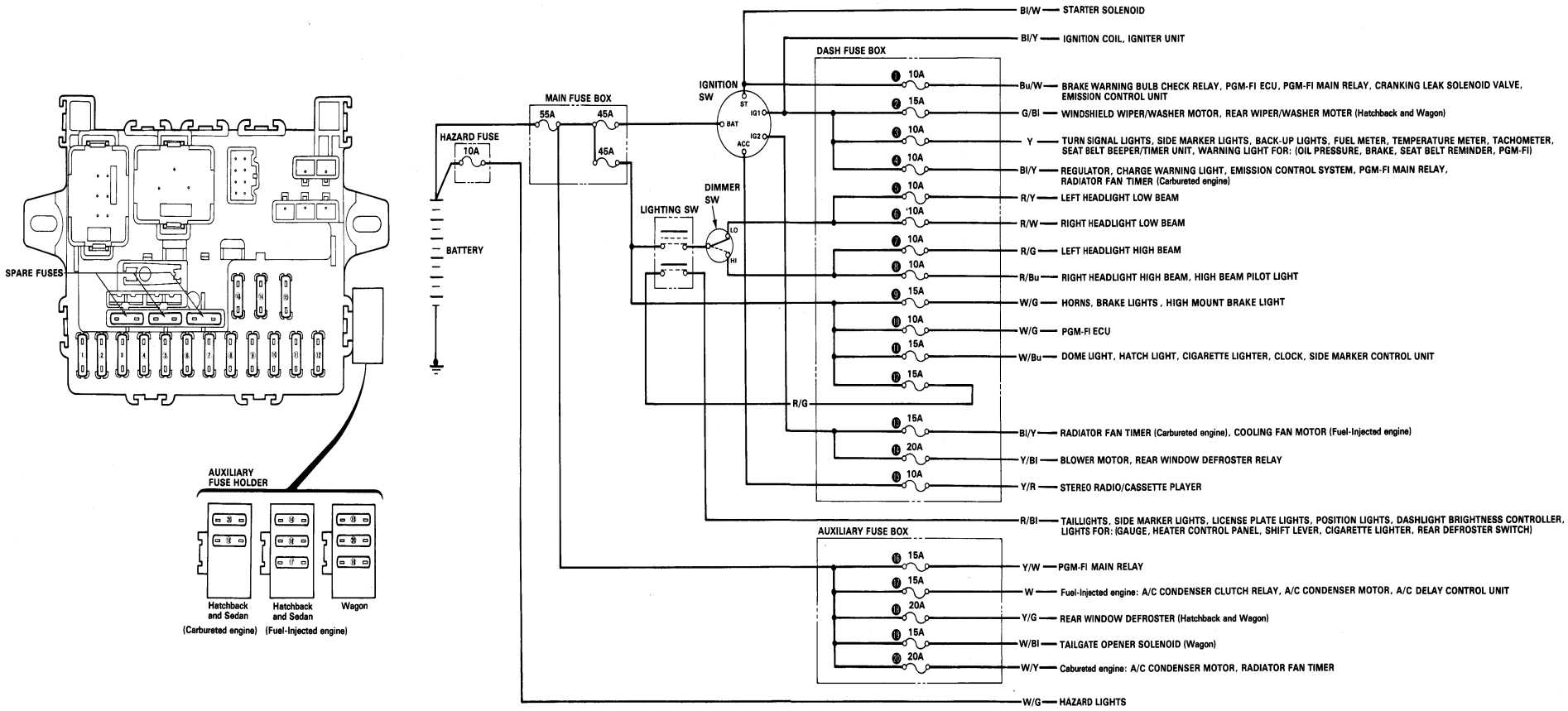

NOTE: The hazard light fuse is in-line with the battery cable at the battery positive post, and therefore has no fuse number.

Wagon

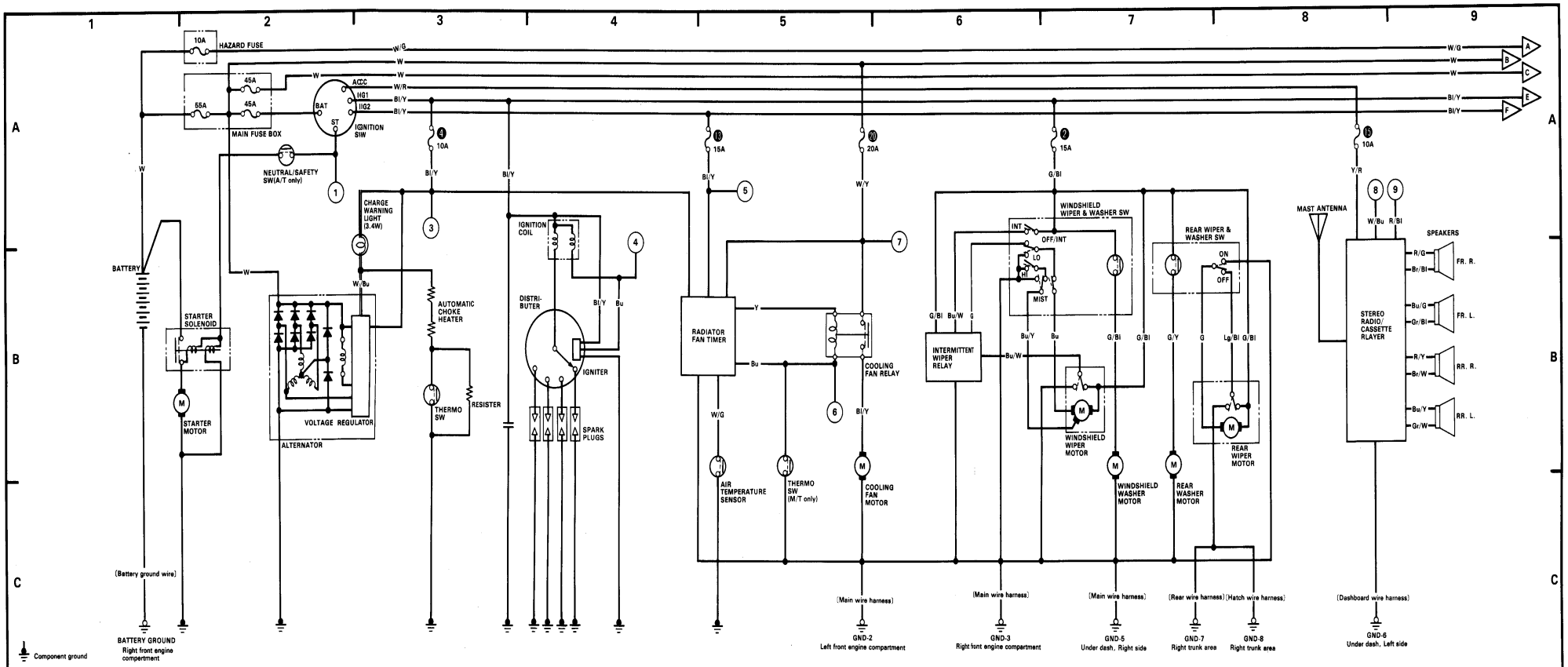

No.	Part	Location	Connection	Part	Location	Remark
①	IGNITION SW (ST)	2-A		● 10A FUSE	16-A	
③	● 10A FUSE	3-A		EMISSION CONTROL UNIT, No.1/No.2 CONTROL BOX THERMO SENSOR A/B, SPEED SENSOR	24-A	M/T
				EMISSION CONTROL UNIT, No.1/No.2 CONTROL BOX THERMO SENSOR A/B, SPEED SENSOR	28-A	A/T

No.	Part	Location	Connection	Part	Location	Remark
④	IGNITION COIL	4-A		TACHOMETER	17-B	
				EMISSION CONTROL UNIT	26-A	M/T
				EMISSION CONTROL UNIT	30-A	A/T
⑤	● 15A FUSE	5-A		A/C CLUTCH RELAY	13-A	
⑥	COOLING FAN RELAY	5-B		A/C PRESSURE SW	12-B	
				EMISSION CONTROL UNIT	26-A	M/T
⑦	● 10A FUSE	6-A		A/C CONDENSER RELAY	12-A	

No.	Part	Location	Connection	Part	Location	Remark
⑧	STEREO RADIO/CASSETTE PLAYER	8-A		● 15A FUSE	14-A	
⑨	STEREO RADIO/CASSETTE PLAYER	9-A		LIGHTING SW	22-B	

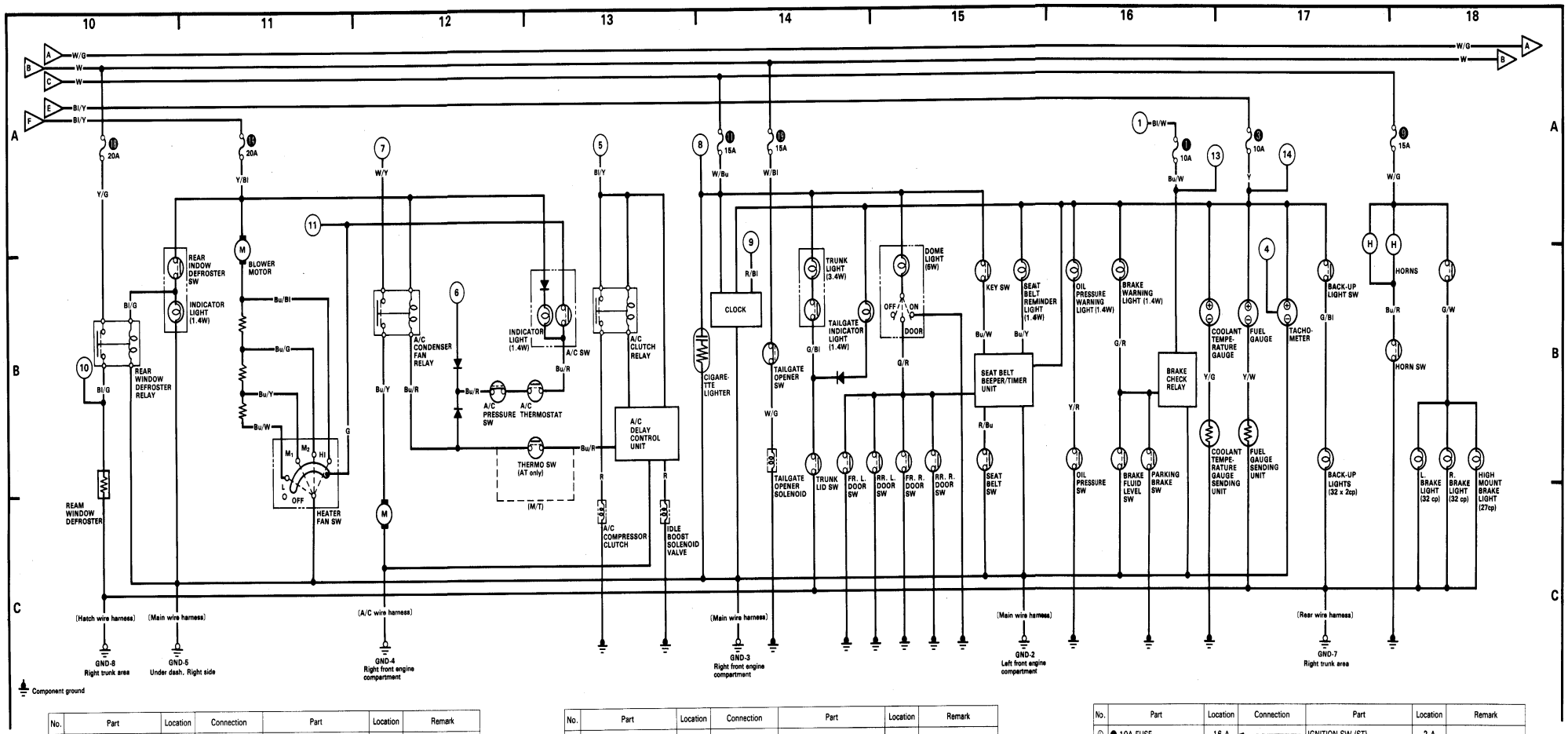

No.	Part	Location	Connection	Part	Location	Remark
⑥	A/C PRESSURE SW	12-B	←	COOLING FAN RELAY	5-B	
⑦	A/C CONDENSER FAN RELAY	12-A	←	● 20A FUSE	6-A	
⑧	REAR WINDOW DEFROSTER RELAY	10-B	→	EMISSION CONTROL UNIT	26-A	M/T
⑪	HEATER FAN SW	11-A	←	EMISSION CONTROL UNIT	26-A	M/T

No.	Part	Location	Connection	Part	Location	Remark
⑤	A/C CLUTCH RELAY, A/C DELAY CONTROL UNIT	13-A	←	● 15A FUSE	5-A	
⑧	● 15A FUSE	14-A	→	STEREO RADIO/CASSETTE PLAYER	8-A	
			→	SIDE MARKER CONTROL UNIT	19-A	
⑨	CLOCK	14-A	←	LIGHTNING SW	22-B	

No.	Part	Location	Connection	Part	Location	Remark
①	● 10A FUSE	16-A	←	IGNITION SW (ST)	2-A	
④	TACHOMETER	17-B	←	IGNITION COIL	4-A	
⑬	● 10A FUSE	16-A	→	CRANKING LEAK SOLENOID VALVE	24-B	M/T
			→	CRANKING LEAK SOLENOID VALVE	28-B	A/T
			→	EMISSION CONTROL UNIT	30-A	A/T
⑭	● 10A FUSE	17-A	→	TURN SIGNAL/HAZARD RELAY	20-A	

Wagon

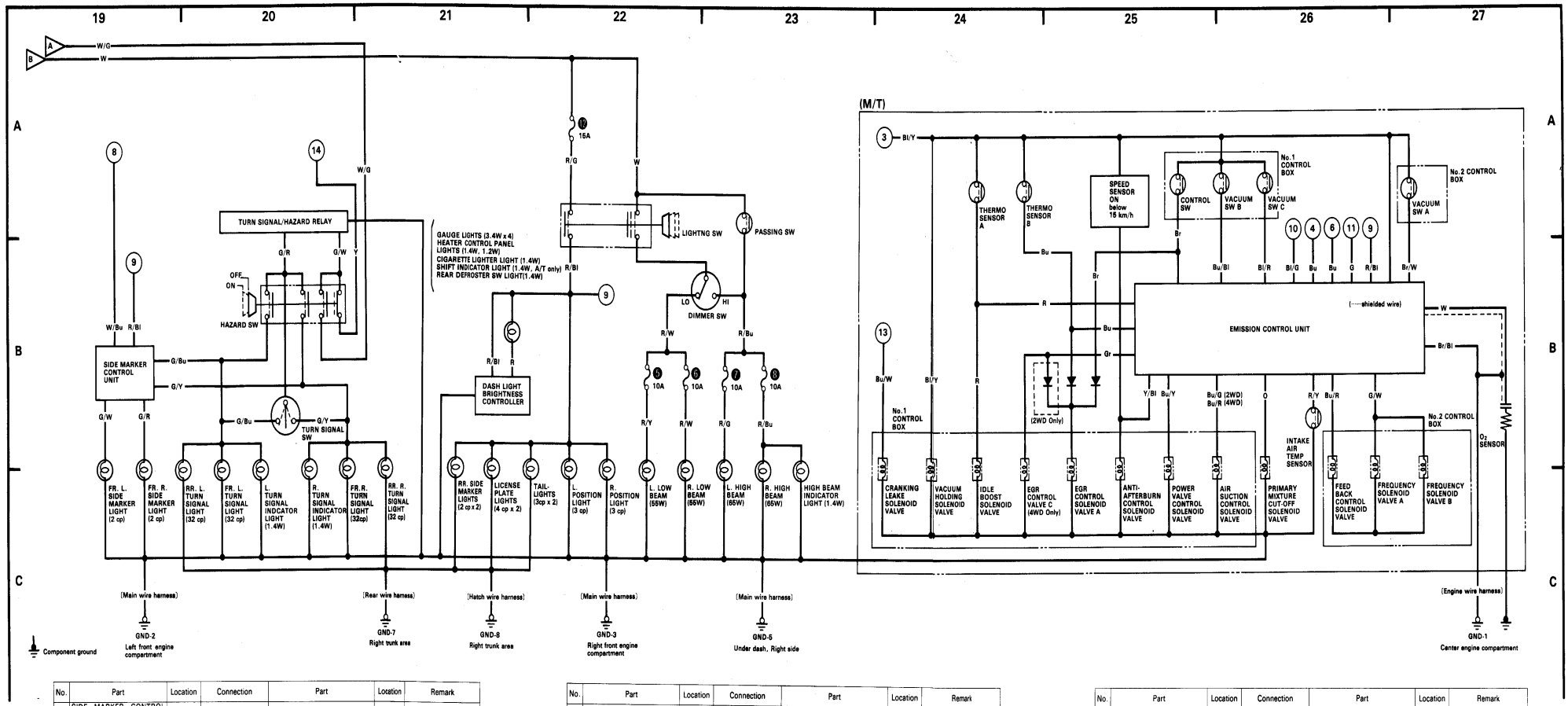

No.	Part	Location	Connection	Part	Location	Remark
⑧	SIDE MARKER CONTROL UNIT	19-A		● 15A FUSE	14-A	
⑨	SIDE MARKER CONTROL UNIT	19-B		LIGHTING SW	22-B	
⑭	TURN SIGNAL/HAZARD RELAY	20-A		● 10A FUSE	17-A	

No.	Part	Location	Connection	Part	Location	Remark
③	EMISSION CONTROL UNIT, No.1/No.2 CONTROL BOX, THERMO SENSOR A/B, SPEED SENSOR	24-A		● 10A FUSE	3-A	
⑨	LIGHTING SW	22-B		STEREO RADIO/CASSETTE PLAYER	9-A	
				CLOCK	14-A	
				EMISSION CONTROL UNIT	26-A	M/T
⑬	CRANKING LEAK SOLENOID VALVE	24-B		● 10A FUSE	16-A	

No.	Part	Location	Connection	Part	Location	Remark
④	EMISSION CONTROL UNIT	26-A		IGSITION COIL	4-A	
⑥	EMISSION CONTROL UNIT	26-A		COOLING FAN RELAY	5-B	
⑨	EMISSION CONTROL UNIT	26-A		LIGHTING SW	22-B	
⑩	EMISSION CONTROL UNIT	26-A		REAR WINDOW DEFROSTER RELAY	10-B	
⑪	EMISSION CONTROL UNIT	26-A		HEATER FAN SW	11-A	