# S2000

2000-2003
Service Manual

# INTRODUCTION

## How to Use This Manual

This manual is divided into 23 sections. The first page of each section is marked with a black tab that lines up with its corresponding thumb index tab on this page and the back cover. You can quickly find the first page of each section without looking through a full table of contents. The symbols printed at the top corner of each page can also be used as a quick reference.

Each section includes:

1. A table of contents, or an exploded view index showing:
   - Parts disassembly sequence.
   - Bolt torques and thread sizes.
   - Page references to descriptions in text.
2. Disassembly/assembly procedures and tools.
3. Inspection.
4. Testing/troubleshooting.
5. Repair.
6. Adjustments.

## Safety Messages

Your safety, and the safety of others, is very important. To help you make informed decisions we have provided safety messages and other safety information throughout this manual. Of course, it is not practical or possible to warn you about all the hazards associated with servicing this vehicle. You must use your own good judgment.

You will find important safety information in a variety of forms including:

- **Safety Labels** – on the vehicle.
- **Safety Messages** – preceded by a safety alert symbol ⚠ and one of three signal words, DANGER, WARNING, or CAUTION. These signal words mean:

| | |
|---|---|
| ⚠DANGER | You WILL be KILLED or SERIOUSLY HURT if you don't follow instructions. |
| ⚠WARNING | You CAN be KILLED or SERIOUSLY HURT if you don't follow instructions. |
| ⚠CAUTION | You CAN be HURT if you don't follow instructions. |

- **Instructions** – how to service this vehicle correctly and safely.

All information contained in this manual is based on the latest product information available at the time of printing. We reserve the right to make changes at any time without notice. No part of this publication may be reproduced, or stored in a retrieval system, or transmitted, in any form by any means, electronic, mechanical, photocopying, recording, or otherwise, without the prior written permission of the publisher. This includes text, figures, and tables.

As you read this manual, you will find information that is preceded by a NOTICE symbol. The purpose of this message is to help prevent damage to your vehicle, other property, or the environment.

First Edition 09/2002 1,104 pages
All Rights Reserved
Specifications apply to U.S.A. and Canada

**HONDA MOTOR CO., LTD.**
**Service Publication Office**

**As sections with *include SRS components; special precautions are required when servicing.**

General Info
Specifications
Maintenance
Engine Electrical
Engine
Cooling
Fuel and Emissions
*Transaxle
*Steering
Suspension
*Brakes (Including ABS)
*Body
*Heating, Ventilation and Air Conditioning
*Body Electrical
*Restraints

# Service Manual Index

NOTE: Refer to the following list to look up DTCs, symptoms, fuses, connectors, wire harnesses, specifications, maintenance schedules, and general service information:


**DTC Troubleshooting Indexes**
ABS/TCS Components ..... 19-37
EPS Components ..... 17-22
Fuel and Emissions ..... 11-6
Heating/Ventilation ..... 21-9
SRS ..... 23-20

**Symptom Troubleshooting Indexes**
ABS/TCS Components ..... 19-38
Cruise Control System ..... 4-37
EPS Components ..... 17-23
Fan Controls ..... 10-13
Fuel and Emissions ..... 11-9
Heating/Ventilation ..... 21-10
SRS ..... 23-21

**Fuse/Relay Indexes**
Power Distribution ..... 22-35
Under-dash Fuse/Relay Box, Driver's ..... 22-33
Under-hood Fuse Box, Auxiliary ..... 22-34
Under-hood Fuse/Relay Box, Main .... 22-32

**Connector and Wire Harness Indexes**
Component Connectors (to harness) ..... 22-10
Grounds (to components) ..... 22-38
In-line Connectors (to harness) ..... 22-9

**Specifications section ..... Section 2**

**Maintenance section ..... Section 3**

**General Information section ..... Section 1**


## A


**A/C**
Component Location Index ..... 21-3
Description ..... 21-11
Circuit Diagram ..... 21-14
Test ..... 21-55

**A/C Compressor**
Replacement ..... 21-44

**A/C Compressor Clutch**
Inspection ..... 21-46
Overhaul ..... 21-47

**A/C Compressor Clutch Circuit**
Troubleshooting ..... 21-29

**A/C Compressor Clutch Relay**
Test ..... 22-40

**A/C Compressor Relief Valve**
Replacement ..... 21-49

**A/C Compressor Thermal Protector**
Replacement ..... 21-49

**A/C Condenser**
Replacement ..... 21-50

**A/C Condenser Fan Circuit**
Troubleshooting ..... 21-27

**A/C Pressure Switch Circuit**
Troubleshooting ..... 21-31

**A/C Signal Circuit**
Troubleshooting ..... 11-94

**A-pillar Exterior Trim**
Replacement ..... 20-104

**ABS Indicator Circuit**
Troubleshooting ..... 19-56

**ABS Modulator-control Unit**
Removal/Installation ..... 19-59

**ABS/TCS Components**
Component Location Index ..... 19-32
How-to Information ..... 19-33
Description ..... 19-39
Circuit Diagram ..... 19-46

**Accessory Power Socket, Front**
Test/Replacement ..... 22-95

**Accessory Power Sockets**
Component Location Index ..... 22-93
Circuit Diagram ..... 22-94

**Air Cleaner Element**
Replacement ..... 11-123

**Air Mix Control Motor**
Replacement ..... 21-33
Test ..... 21-33

**Air Pump**
Removal/Installation ..... 11-159

**Air Pump Electrical Current Sensor**
Removal/Installation ..... 11-160

**Air Pump Relay**
Test ..... 11-160

**Airbag, Driver's**
Replacement ..... 23-65
Repair ..... 23-69

**Airbag, Front Passenger's**
Replacement ..... 23-67

**Alternator**
Replacement ..... 4-26
Overhaul ..... 4-29

**Alternator FR Signal Circuit**
Troubleshooting ..... 11-96

**Alternator-compressor Belt**
Inspection/Replacement ..... 4-25

**Alternator-compressor Belt Auto-tensioner**
Inspection/Replacement ..... 4-27

**Antenna**
Replacement ..... 22-92

**Audio Unit**
Removal ..... 22-89
Replacement ..... 22-89

**Audio/Entertainment**
Component Location Index ..... 22-87
Circuit Diagram ..... 22-88


## B


**Back-up Light Switch**
Test ..... 13-3

**Back-up Lights**
Circuit Diagram ..... 22-64

**Ball Joint Boots**
Replacement
Front Suspension ..... 18-16
Rear Suspension ..... 18-33

**Ball Joints**
Removal ..... 18-10

**Battery**
Test ..... 22-39

**Blower Motor**
Replacement ..... 21-39

**Blower Power Transistor**
Test ..... 21-36

**Blower Unit**
Removal/Installation ..... 21-38

**Brake Booster**
Test ..... 19-19

**Brake Calipers**
Overhaul ..... 19-15, 24
Removal/Installation ..... 19-23

**Brake Discs**
Inspection ..... 19-14, 22

**Brake Fluid Level Switch**
Test ..... 19-11

**Brake Lights**
Circuit Diagram ..... 22-64

**Brake Lines and Hoses**
Inspection ..... 19-26
Replacement ..... 19-27

**Brake Master Cylinder**
Replacement ..... 19-16
Adjustment ..... 19-17
Inspection ..... 19-17

**Brake Pads**
Inspection/Replacement ..... 19-12, 20

**Brake Pedal**
Adjustment ..... 19-6

**Brake Pedal Position Switch**
Test ..... 4-47

(cont'd)

# Service Manual Index

## (cont'd)


**Brake Pedal Position Switch Signal Circuit**
Troubleshooting ..... 11-99

**Brake System Indicator Circuit**
Circuit Diagram ..... 19-10

**Bumper, Front**
Removal/Installation ..... 20-92

**Bumper, Rear**
Removal/Installation ..... 20-93


## C


**Cable Reel**
Replacement ..... 23-72

**Camshaft**
Inspection ..... 6-36

**Camshaft Gears**
Removal ..... 6-31
Installation ..... 6-45

**Carpet**
Replacement ..... 20-74

**Catalytic Converter System**
How-to Information ..... 11-38

**Ceiling Light**
Test ..... 22-82

**Center Carpet**
Replacement ..... 20-75

**Center Console**
Removal/Installation ..... 20-76

**Charging System**
Component Location Index ..... 4-20
Circuit Diagram ..... 4-21
Troubleshooting ..... 4-22

**Clutch**
Component Location Index ..... 12-3

**Clutch Disc**
Replacement ..... 12-7

**Clutch Interlock Switch**
Test ..... 4-6

**Clutch Master Cylinder**
Replacement ..... 12-5

**Clutch Pedal**
Adjustment ..... 12-4

**Clutch Pedal Position Switch**
Test ..... 4-47

**Clutch Slave Cylinder**
Replacement ..... 12-6

**Combination Light Switch**
Test/Replacement ..... 22-65

**Connecting Rod Bearings**
Replacement ..... 7-9

**Connecting Rods**
Inspection ..... 7-6

**Connectors**
(See first page of this Index)

**Control Arms**
Replacement ..... 18-38

**Conventional Brake Components**
Component Location Index ..... 19-3
Troubleshooting ..... 19-4
Repair ..... 19-8

**Convertible Top**
Component Location Index ..... 20-35, 22-139, 149
Circuit Diagram ..... 22-140
Description ..... 22-142

**Convertible Top Assembly**
Replacement ..... 20-38

**Convertible Top Cloth**
Replacement ..... 20-40
Repair ..... 20-48

**Convertible Top Control Unit**
Input Test ..... 22-144

**Convertible Top Cover Snap**
Replacement ..... 20-53

**Convertible Top Disable Switch**
Test ..... 22-150

**Convertible Top Drain Tank**
Replacement ..... 20-52

**Convertible Top Lock Handle**
Adjustment ..... 20-49
Replacement ..... 20-49

**Convertible Top Motors**
Replacement ..... 20-50
Test ..... 22-147

**Convertible Top Rear Window**
Replacement ..... 20-43

**Convertible Top Rear Window Lower Molding**
Replacement ..... 20-47

**Convertible Top Strikers**
Replacement ..... 20-50

**Convertible Top Switch**
Test ..... 22-143

**Convertible Top Weatherstrip, A-pillar-header**
Replacement ..... 20-51

**Convertible Top Weatherstrip, B-pillar Outer**
Replacement ..... 20-52

**Coolant**
Replacement ..... 10-8

**Coolant Temperature Gauge Circuit**
Troubleshooting ..... 22-55

**Cooling System**
Component Location Index ..... 10-2

**Cowl Cover**
Replacement ..... 20-101

**Crankshaft**
Removal ..... 7-11
Inspection ..... 7-13
Installation ..... 7-24

**Crankshaft Main Bearings**
Replacement ..... 7-7

**Crankshaft Oil Seal, Pulley End**
Installation ..... 7-26

**Crankshaft Oil Seal, Transmission End**
Installation ..... 7-26

**Crankshaft Pulley**
Removal/Installation ..... 6-14

**Cruise Control Actuator**
Test ..... 4-43
Replacement ..... 4-44

**Cruise Control Actuator Cable**
Replacement ..... 4-45
Adjustment ..... 4-46

**Cruise Control Main Switch**
Test ..... 4-40, 41
Replacement ..... 4-41

**Cruise Control Set/Resume Switch**
Replacement ..... 4-42
Test ..... 4-42

**Cruise Control System**
Component Location Index ..... 4-35
Circuit Diagram ..... 4-36

**Cruise Control Unit**
Input Test ..... 4-38

**Cylinder Head Assembly**
Component Location Index ..... 6-3
Removal ..... 6-25
Installation ..... 6-45

**Cylinder Head Cover**
Installation ..... 6-53

**Cylinder Head, Bare**
Inspection ..... 6-32


## D


**Dampers, Front**
Replacement ..... 18-22

**Dampers, Rear**
Replacement ..... 18-39

**Dash Lights Brightness Control**
Circuit Diagram ..... 22-84

**Dash Lights Brightness Controller**
Input Test ..... 22-85

**Dash Vents**
Removal/Installation ..... 20-82

**Dashboard**
Removal/Installation ..... 20-82

**Dashboard Lower Cover**
Removal/Installation ..... 20-81

**Differential Case Assembly**
Removal/Installation ..... 15-9

**Differential Fluid, Rear**
Inspection/Replacement ..... 15-6

**Differential Mount, Rear**
Replacement ..... 15-29

**Differential Oil Seal, Rear**
Replacement ..... 15-10

**Differential Ring Gear, Rear**
Inspection ..... 15-11

**DLC Circuit**
Troubleshooting ..... 11-85

**Door Glass**
Replacement ..... 20-8
Adjustment ..... 20-11

**Door Glass Weatherstrips**
Replacement ..... 20-16

**Door Key Cylinder Switches**
Test ..... 22-137

**Door Latches**
Replacement ..... 20-7

**Door Lock Actuators**
Test ..... 22-136, 137

**Door Lock Knob Switches**
Test ..... 22-136

**Door Outer Handles**
Replacement ..... 20-5

**Door Panels**
Removal/Installation ..... 20-4

**Door Sash Holders**
Replacement ..... 20-15
Adjustment ..... 20-16

**Door Weatherstrips**
Replacement ..... 20-17

**Door Wedges**
Replacement ..... 20-17

**DRL (Daytime Running Lights) Control Unit**
Input Test ..... 22-66

**DTCs**
(See first page of this Index)

**Dust and Pollen Filter**
Replacement ..... 21-42

## E

**Electrical Power Steering (EPS) Signal Circuit**
Troubleshooting ..... 11-98

**Emblems**
Replacement ..... 20-103

**Engine Assembly**
Removal ..... 5-2
Installation ..... 5-7

**Engine Block Assembly**
Component Location Index ..... 7-3

**Engine Block, Bare**
Inspection ..... 7-14
Repair ..... 7-16

**EPS Components**
Component Location Index ..... 17-17
How-to Information ..... 17-18
Description ..... 17-24
Circuit Diagram ..... 17-26

**EPS Control Unit**
Removal/Installation ..... 17-59

**EPS Indicator Circuit**
Troubleshooting ..... 17-42

**EPS Torque Sensor**
Adjustment ..... 17-45
Replacement ..... 17-54

**EVAP Control System**
Component Location Index ..... 11-130

**EVAP Two-Way Valve**
Test ..... 11-145

**Evaporator Temperature Sensor**
Test ..... 21-36

**Exhaust Manifold**
Removal/Installation ..... 9-3

**Exhaust Pipe**
Replacement ..... 9-4

## F

**Fan Controls**
Component Location Index ..... 10-12
Circuit Diagram ..... 10-14

**Fenderwell Trim**
Replacement ..... 20-107

**Flywheel**
Removal/Installation ..... 7-5

**Frame**
Repair Chart ..... 20-116

**Front Console Cover**
Removal/Installation ..... 20-81

**Front Doors**
Component Location Index ..... 20-2
Adjustment ..... 20-18

**Front Seats**
Component Location Index ..... 20-85

**Front Speakers**
Replacement ..... 22-91

**Front Suspension**
Component Location Index ..... 18-3

**Fuel and Emissions**
Description ..... 11-10

**Fuel Fill Door**
Adjustment ..... 20-100

**Fuel Fill Door Opener Cable**
Replacement ..... 20-110

**Fuel Filter**
Replacement ..... 11-113

**Fuel Gauge Sending Unit**
Test ..... 11-119

**Fuel Injection System (PGM-FI)**
Component Location Index ..... 11-41

**Fuel Injectors**
Replacement ..... 11-87

**Fuel Lines and Hoses**
Inspection ..... 11-108
Removal ..... 11-110
Installation ..... 11-111

**Fuel Pressure Regulator**
Replacement ..... 11-113

**Fuel Pump**
Test ..... 11-107
Replacement ..... 11-114

**Fuel Supply System**
Component Location Index ..... 11-101
Adjustment ..... 11-105
Troubleshooting ..... 11-105

**Fuel Tank**
Replacement ..... 11-115

**Fuel Tank Vapor Control Valve**
Test ..... 11-146
Replacement ..... 11-147

**Fuses**
(See first page of this Index)

(cont'd)

# Service Manual Index

## (cont'd)


### G

**Gauge Assembly**
Replacement
Gauges ..... 22-52
Input Test
Lights-on Reminder ..... 22-57

**Gauges**
Component Location Index ..... 22-44
Circuit Diagram ..... 22-47

**General Information**
(See section 1)

### H

**Hazard Warning Switch**
Test ..... 22-79

**Headlight**
Removal ..... 22-69
Replacement ..... 22-71
Adjustment ..... 22-72

**Headlights**
Circuit Diagram ..... 22-61, 62
Troubleshooting ..... 22-68

**Headliner**
Removal/Installation ..... 20-56

**Heater Control Panel**
How-to Information ..... 21-8
Removal/Installation ..... 21-37

**Heater Control Power and Ground Circuits**
Troubleshooting ..... 21-25

**Heater Unit**
Replacement ..... 21-40

**Heater Valve Cable**
Adjustment ..... 21-43

**High Mount Brake Light**
Replacement ..... 22-75

**Hood**
Adjustment ..... 20-94

**Hood Insulator**
Replacement ..... 20-96

**Hood Latch**
Replacement ..... 20-111

**Hood Opener Cable**
Component Location Index ..... 20-108
Replacement ..... 20-109

**Hood Release Handle**
Replacement ..... 20-111

**Horn**
Test/Replacement ..... 22-97

**Horn Switch**
Test ..... 22-98

**Horns**
Component Location Index ..... 22-96
Circuit Diagram ..... 22-97

**HO2S, Primary**
Replacement ..... 11-89

**HO2S, Secondary**
Replacement ..... 11-89

### I

**Idle Control System**
Component Location Index ..... 11-90
Inspection ..... 11-100

**Ignition Key Switch**
Test ..... 22-135

**Ignition Switch**
Test ..... 22-43

**Ignition System**
Component Location Index ..... 4-16
Circuit Diagram ..... 4-17
Inspection ..... 4-18

**Immobilizer Receiver Unit**
Replacement ..... 22-121

**Immobilizer System**
Component Location Index ..... 22-116
Description ..... 22-117
Circuit Diagram ..... 22-119
Troubleshooting ..... 22-120

**Inner Fender**
Replacement ..... 20-105

**Inner Fender Strakes**
Replacement ..... 20-106

**Inside Rearview Mirror**
Replacement ..... 20-22

**Instrument Panel**
Removal/Installation ..... 20-80

**Intake Air System**
Component Location Index ..... 11-121

**Intake Manifold**
Removal/Installation ..... 9-2

**Intermittent Wiper Control Circuit**
Input Test ..... 22-110

### K

**Keyless Door Lock Control Unit**
Input Test ..... 22-132

**Keyless Entry Transmitter**
Repair ..... 22-138
Test ..... 22-138

**Keyless Entry/Security Alarm System**
Circuit Diagram ..... 22-131

**Knuckles**
Replacement
Front Suspension ..... 18-11
Rear Suspension ..... 18-28

### L

**License Plate Light**
Replacement ..... 22-75

**Lights, Exterior**
Component Location Index ..... 22-59

**Lights, Interior**
Component Location Index ..... 22-80
Circuit Diagram ..... 22-81

**Lights-on Reminder**
Circuit Diagram ..... 22-56

**Low Fuel Indicator**
Test
Fuel Supply System ..... 11-120
Replacement
Indicators ..... 22-46

**Lower Arms**
Removal/Installation
Front Suspension ..... 18-19
Rear Suspension ..... 18-35

**LSD**
Inspection ..... 15-3
Description ..... 15-4

**Lubrication System**
Component Location Index ..... 8-3
Test ..... 8-4

### M

**M/T Assembly**
Removal ..... 13-5
Disassembly ..... 13-12
Resassembly ..... 13-55
Installation ..... 13-66

**M/T Countershaft Assembly**
Inspection ..... 13-36, 40
Disassembly ..... 13-38
Resassembly ..... 13-41

**M/T Mainshaft Assembly**
Inspection ..... 13-27, 31
Disassembly ..... 13-30
Resassembly ..... 13-32
Adjustment ..... 13-54

**M/T Secondary Shaft Assembly**
Disassembly ..... 13-45
Inspection ..... 13-45
Resassembly ..... 13-46
Adjustment ..... 13-53

**M/T Shift Lever**
Replacement ..... 13-4

**Maintenance**
(See section 3)

**Maintenance Required Indicator**
Repair ..... 22-54

**MIL Circuit**
Troubleshooting ..... 11-81

**Mirrors**
Component Location Index ..... 20-20

**Mode Control Motor**
Replacement ..... 21-34
Test ..... 21-34

**MTF**
Inspection/Replacement ..... 13-3

## O

**Oil Filter**
Replacement ..... 8-6

**Oil Jet**
Inspection ..... 8-7

**Oil Pressure Switch**
Test ..... 8-4

**Oil Pump, Engine**
Overhaul ..... 8-8

**Oil Pump, M/T**
Inspection ..... 13-52

**Oil, Engine**
Replacement ..... 8-5

**Outside Mirror Holders**
Replacement ..... 20-21

**Outside Power Mirror Actuators**
Test ..... 22-105
Replacement ..... 22-106

**Outside Power Mirror Switch**
Test ..... 22-105

**Outside Power Mirrors**
Replacement ..... 20-21
Component Location Index ..... 22-102
Circuit Diagram ..... 22-103
Test ..... 22-104

## P

**Parking Brake**
Inspection/Adjustment ..... 19-7

**Parking Brake Cable**
Replacement ..... 19-28

**Parking Brake Switch**
Test ..... 19-11

**PCV Valve**
Test ..... 11-129

**PGM-FI Main Relay Circuit**
Troubleshooting ..... 11-102

**Piston Rings**
Replacement ..... 7-20

**Pistons**
Replacement ..... 7-17
Installation ..... 7-22

**Power Door Locks**
Component Location Index ..... 22-130

**Power Window Motor, Driver's**
Test ..... 22-129

**Power Window Motors, Passenger's**
Test ..... 22-129

**Power Window Switch, Master**
Test ..... 22-124
Input Test ..... 22-125

**Power Window Switch, Passenger's**
Test/Replacement ..... 22-128

**Power Windows**
Component Location Index ..... 22-122
Circuit Diagram ..... 22-123

**Propeller Shaft**
Inspection ..... 16-16
Removal ..... 16-17
Installation ..... 16-18

**Pulsed Secondary Air Injection System**
Component Location Index ..... 11-148

## R

**Radiator**
Test ..... 10-5
Replacement ..... 10-11

**Radiator and Condenser Fans Common Circuit**
Troubleshooting ..... 21-28

**Radiator Cap**
Test ..... 10-5

**Radiator Fan Assembly**
Test ..... 10-6

**Radiator Fan Circuit**
Troubleshooting ..... 10-15

**Radiator Fan Switch**
Test ..... 10-18

**Radiator Fan Switch Circuit**
Troubleshooting ..... 10-17

**Radio Panel**
Removal/Installation ..... 20-80

**Radio Remote Switch**
Test ..... 22-90

**Rear Air Outlet**
Replacement ..... 20-107

**Rear Console**
Removal/Installation ..... 20-78

**Rear Console Box**
Replacement ..... 20-79

**Rear Console Wind Deflector**
Replacement ..... 20-77

**Rear Differential**
Removal ..... 15-7
Disassembly ..... 15-12
Resassembly ..... 15-18
Installation ..... 15-26

**Rear Driveshaft Assembly**
Inspection ..... 16-3
Removal ..... 16-3
Disassembly ..... 16-5
Resassembly ..... 16-8
Installation ..... 16-15

**Rear Suspension**
Component Location Index ..... 18-4

**Rear Tray Opening Molding**
Replacement ..... 20-102

**Rear Window Defogger**
Component Location Index ..... 22-151
Circuit Diagram ..... 22-153, 154

**Rear Window Defogger Switch**
Test ..... 22-155

**Rear Window Defogger Wires**
Test ..... 22-156
Repair ..... 22-157

**Rear Window Glass**
Component Location Index ..... 20-24
Replacement ..... 20-32

**Rear Window Lower Molding**
Replacement ..... 20-102

**Recirculation Control Motor**
Replacement ..... 21-35
Test ..... 21-35

(cont'd)

# Service Manual Index

## (cont'd)


**Recirculation Control Motor Circuit**
Troubleshooting ..... 21-24

**Refrigerant**
Replacement ..... 21-51, 52, 53
Test ..... 21-54

**Refrigerant Oil**
Replacement ..... 21-6

**Removable Hardtop**
Component Location Index ..... 20-54

**Removable Hardtop Lock Handle**
Replacement ..... 20-61

**Removable Hardtop Roof**
Adjustment ..... 20-65

**Removable Hardtop Roof Catch**
Replacement ..... 20-64

**Removable Hardtop Roof Catch Assembly**
Replacement ..... 20-63

**Removable Hardtop Roof Side Lock**
Replacement ..... 20-62

**Removable Hardtop Strikers**
Replacement ..... 20-63

**Removable Hardtop Weatherstrip, Hardtop Lower**
Replacement ..... 20-60

**Rocker Arm Assembly**
Disassembly/Reassembly ..... 6-33

**Rocker Arms**
Test ..... 6-10
Inspection ..... 6-34

**Roof Front Trim**
Replacement ..... 20-61

**Roof Moldings**
Replacement ..... 20-57


## S


**Seat Belts**
Component Location Index ..... 23-3

**Seat Belts, Front**
Replacement ..... 23-4
Inspection ..... 23-8

**Seat Cover, Front**
Replacement ..... 20-89

**Seat, Front**
Removal/Installation ..... 20-86
Disassembly/Reassembly ..... 20-87, 88

**Shift Arm**
Disassembly/Reassembly ..... 13-35

**Shift Forks**
Inspection ..... 13-47
Disassembly/Reassembly ..... 13-49

**Spark Plugs**
Inspection ..... 4-19

**Specifications**
(See section 2)

**SRS**
Component Location Index ..... 23-9
Description ..... 23-22
Circuit Diagram ..... 23-23
Inspection/Replacement ..... 23-64

**SRS Indicator Circuit**
Troubleshooting ..... 23-55

**SRS Unit**
Replacement ..... 23-75

**Stabilizer Bar**
Replacement
Front Suspension ..... 18-17
Rear Suspension ..... 18-34

**Stabilizer Links**
Removal/Installation
Front Suspension ..... 18-18
Rear Suspension ..... 18-34

**Starter**
Test ..... 4-7
Replacement ..... 4-8
Overhaul ..... 4-10

**Starter Solenoid**
Test ..... 4-7

**Starter Switch Signal Circuit**
Troubleshooting ..... 11-97

**Starting System**
Component Location Index ..... 4-3
Circuit Diagram ..... 4-4
Troubleshooting ..... 4-5

**Steering**
Component Location Index ..... 17-3
Inspection ..... 17-4

**Steering Column**
Removal/Installation ..... 17-9
Inspection ..... 17-12

**Steering Gearbox**
Removal/Installation ..... 17-46
Overhaul ..... 17-53

**Steering Gearbox Ball Joint Boot**
Replacement ..... 17-58

**Steering Gearbox Bracket**
Removal/Installation ..... 17-58

**Steering Linkage**
Inspection ..... 17-5

**Steering Lock**
Replacement ..... 17-13

**Steering Rack End**
Removal/Installation ..... 17-55

**Steering Rack Guide**
Adjustment
Not applicable ..... 17-14
Removal/Installation
EPS Components ..... 17-54

**Steering Shaft**
Removal/Installation ..... 17-10

**Steering Wheel**
Inspection ..... 17-4
Removal ..... 17-6
Disassembly/Reassembly ..... 17-7
Installation ..... 17-8

**Subframe, Rear**
Replacement ..... 20-115

**Subframes**
Replacement ..... 20-114

**Suspension**
Adjustment ..... 18-5

**Synchro Ring, Dual-cone**
Inspection ..... 13-50

**Synchro Sleeve**
Inspection/Reassembly ..... 13-51


## T


**Tachometer Circuit**
Troubleshooting ..... 22-55

**Taillight**
Replacement ..... 22-74

**Thermostat**
Test ..... 10-6
Replacement ..... 10-10

**Throttle Body**
Test ..... 11-122
Removal/Installation ..... 11-126
Disassembly/Reassembly ..... 11-127

**Throttle Cable**
Adjustment ..... 11-124
Removal/Installation ..... 11-125

**Timing/Cam Chain**
Removal ..... 6-15
Installation ..... 6-19

**Timing/Cam Chain Case Oil Seal**
Installation ..... 6-24

**Trim**
Removal/Installation
Interior ..... 20-68, 69, 70, 71, 73
Removable Hardtop ..... 20-55
Component Location Index
Interior ..... 20-67

**Troubleshooting**
(See first page of this Index)

**Trunk Latch Switch**
Test ..... 22-83

**Trunk Lid**
Adjustment ..... 20-97

**Trunk Lid Latch**
Replacement ..... 20-112

**Trunk Lid Lock Cylinder**
Replacement ..... 20-113

**Trunk Lid Opener**
Component Location Index ..... 22-99
Circuit Diagram ..... 22-100

**Trunk Lid Opener Solenoid/Latch Switch**
Test ..... 22-101

**Trunk Lid Opener Switch**
Test ..... 22-101

**Trunk Lid Rubber Protector**
Replacement ..... 20-99

**Trunk Lid Torsion Bar**
Replacement ..... 20-98

**Trunk Lid Weatherstrip**
Replacement ..... 20-99

**Trunk Light Assembly**
Test ..... 22-83

**Turn Signal Light**
Replacement ..... 22-74

**Turn Signal/Hazard Relay**
Test ..... 22-78

**Turn Signal/Hazard Warning Lights**
Component Location Index ..... 22-76
Circuit Diagram ..... 22-77

**Tweeters**
Replacement ..... 22-91

## U

**Upper Arms**
Replacement
Front Suspension ..... 18-20
Removal/Installation
Rear Suspension ..... 18-37

## V

**Valve Guides**
Inspection ..... 6-39
Replacement ..... 6-40

**Valve Seats**
Repair ..... 6-42

**Valves**
Adjustment ..... 6-12
Removal ..... 6-38
Inspection ..... 6-39
Installation ..... 6-44

**Vehicle Speed Signal Circuit**
Troubleshooting ..... 22-53

**VSS**
Replacement ..... 22-52

**VTEC Solenoid Valve**
Test ..... 6-9

## W

**Washer Fluid Reservoir**
Replacement ..... 22-113

**Washer Motor, Windshield**
Test ..... 22-112

**Washer Tube, Windshield**
Replacement ..... 22-115

**Water Pump**
Inspection ..... 10-7
Replacement ..... 10-7

**Wheel Bearings**
Inspection ..... 18-9

**Wheel Speed Sensors**
Inspection ..... 19-60
Replacement ..... 19-60

**Wheels and Tires**
Inspection ..... 18-9

**Windows**
Replacement ..... 20-25

**Windshield Glass**
Component Location Index ..... 20-23
Replacement ..... 20-29

**Wiper Motor, Windshield**
Test ..... 22-112
Replacement ..... 22-114

**Wiper/Washer**
Component Location Index ..... 22-107
Circuit Diagram ..... 22-108

**Wiper/Washer Switch**
Test/Replacement ..... 22-111

**Wire Harnesses**
(See first page of this Index)

**Wiring System**
How-to Information ..... 22-2
Relay and Control Unit
Locations ..... 22-6, 7, 8

# General Information


Chassis and Paint Codes-
2000 Model ..... 1-2

Chassis and Paint Codes-
2001 Model ..... 1-3

Chassis and Paint Codes-
2002 Model ..... 1-4

Chassis and Paint Codes-
2003 Model ..... 1-5

Identification Number Locations ..... 1-6

Warning/Caution Label Locations ..... 1-7

Under-hood Emission
Control Label ..... 1-11

Lift and Support Points ..... 1-13

Towing ..... 1-14

Parts Marking ..... 1-15

Service Precaution ..... 1-16

Revised Component Terms ..... 1-17

## Chassis and Paint Codes - 2000 Model

### Vehicle Identification Number

JHM AP1 1 4 * Y T 000001

a b c d e f g h

**a. Manufacturer, Make and Type of Vehicle**
JHM: HONDA MOTOR CO., LTD
HONDA Passenger vehicle
**b. Line, Body and Engine Type**
AP1: S2000/F20C1
**c. Body Type and Transmission Type**
1: 2-door Convertible/6-speed Manual
**d. Vehicle Grade (Series)**
4: Base Model
**e. Check Digit**
**f. Model Year**
Y: 2000
**g. Factory Code**
T: Tochigi Factory in Japan
**h. Serial Number**
For U.S. model: 000001—
For Canada model: 800001—

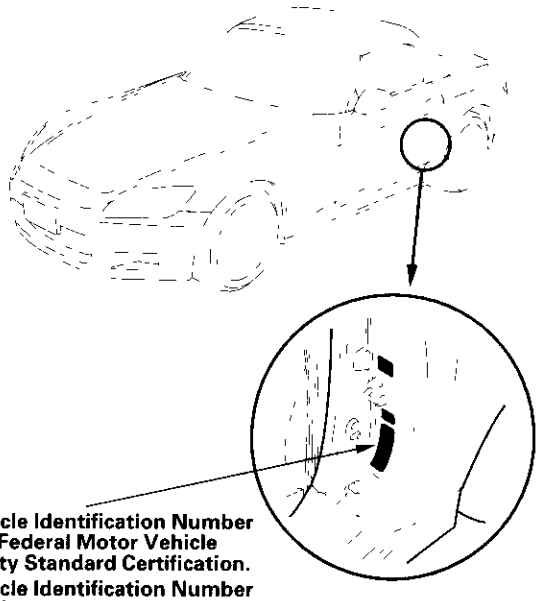

**Vehicle Identification Number and Federal Motor Vehicle Safety Standard Certification.**
**Vehicle Identification Number and Canadian Motor Vehicle Safety Standard Certification.**

### Engine Number

F20C1 - 1000001

a b

**a. Engine Type**
F20C1: 2.0 ℓ DOHC VTEC Sequential Multiport Fuel-injected engine
**b. Serial Number**
U.S. model: 1000001—
Canada model: 1100001—

### Transmission Number

SCYM - 1000001

a b

**a. Transmission Type**
SCYM: 6-speed Manual
**b. Serial Number**

### Paint Code

| Code | Color |
|---|---|
| NH-547 | Berlina Black |
| NH-565 | Grand Prix White |
| NH-630M | Silverstone Metallic |
| R-510 | New Formula Red |

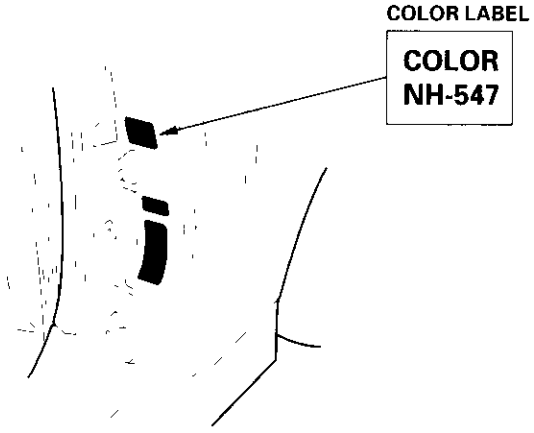

# Chassis and Paint Codes - 2001 Model

## Vehicle Identification Number

JHM AP1 1 4 * 1 T 000001

a b c d e f g h

a. **Manufacturer, Make and Type of Vehicle**
JHM: HONDA MOTOR CO., LTD
HONDA Passenger vehicle
b. **Line, Body and Engine Type**
AP1: S2000/F20C1
c. **Body Type and Transmission Type**
1: 2-door Convertible/6-speed Manual
d. **Vehicle Grade (Series)**
4: Base Model
e. **Check Digit**
f. **Model Year**
1: 2001
g. **Factory Code**
T: Tochigi Factory in Japan
h. **Serial Number**
For U.S. model: 000001–
For Canada model: 800001–

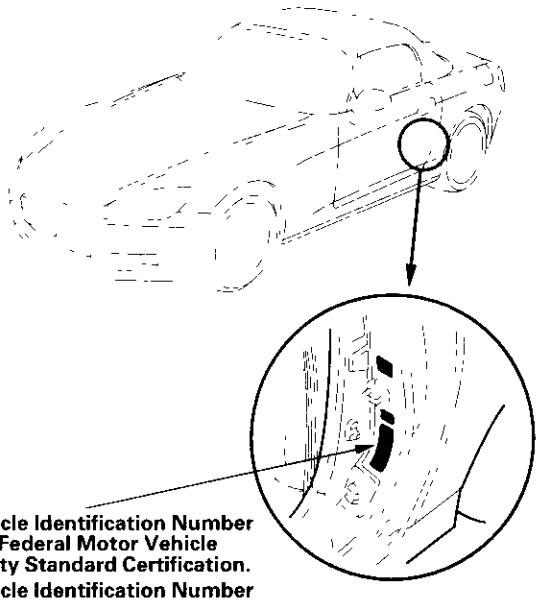

**Vehicle Identification Number and Federal Motor Vehicle Safety Standard Certification.**
**Vehicle Identification Number and Canadian Motor Vehicle Safety Standard Certification.**

## Engine Number

F20C1 - 1010001

a b

a. **Engine Type**
F20C1: 2.0 ℓ DOHC VTEC Sequential Multiport Fuel-injected engine
b. **Serial Number**
U.S. model: 1010001–
Canada model: 1110001–

## Transmission Number

SCYM - 1000001

a b

a. **Transmission Type**
SCYM: 6-speed Manual
b. **Serial Number**

## Paint Code

| Code | Color |
|---|---|
| B-66P | Montecarlo Blue Pearl (Canada model only) |
| NH-547 | Berlina Black |
| NH-565 | Grand Prix White (U.S. model only) |
| NH-630M | Silverstone Metallic |
| R-510 | New Formula Red |
| Y-52P | Spa Yellow Pearl |

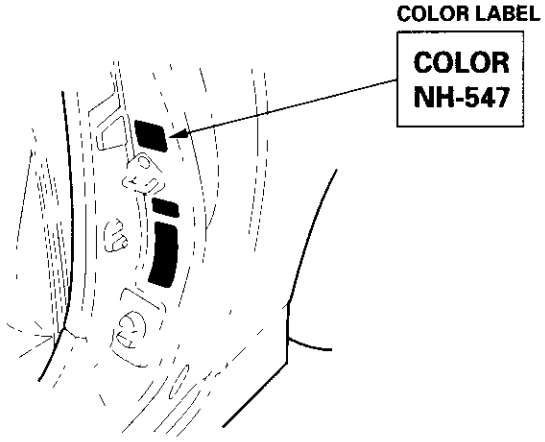

## Chassis and Paint Codes - 2002 Model

### Vehicle Identification Number

JHM AP1 1 4 * 2 T 000001

a b c d e f g h

a. **Manufacturer, Make and Type of Vehicle**
JHM: HONDA MOTOR CO., LTD
HONDA Passenger vehicle
b. **Line, Body and Engine Type**
AP1: S2000/F20C1
c. **Body Type and Transmission Type**
1: 2-door Convertible/6-speed Manual
d. **Vehicle Grade (Series)**
4: Base Model
e. **Check Digit**
f. **Model Year**
2: 2002
g. **Factory Code**
T: Tochigi Factory in Japan
h. **Serial Number**
U.S. model: 000001 –
Canada model: 800001 –

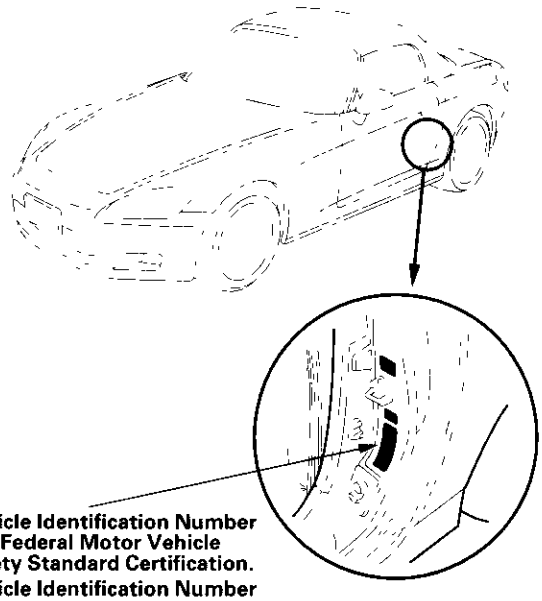

**Vehicle Identification Number and Federal Motor Vehicle Safety Standard Certification.**
**Vehicle Identification Number and Canadian Motor Vehicle Safety Standard Certification.**

### Engine Number

F20C1 - 1020001

a b

a. **Engine Type**
F20C1: 2.0 ℓ DOHC VTEC Sequential Multiport Fuel-injected engine
b. **Serial Number**
U.S. model: 1020001 -
Canada model: 1120001 –

### Transmission Number

SCYM - 2000001

a b

a. **Transmission Type**
SCYM: 6-speed Manual
b. **Serial Number**

### Paint Code

| Code | Color |
|---|---|
| B-513M | Nuerburgring Blue Metallic |
| NH-547 | Berlina Black |
| NH-552M | Sebring Silver Metallic |
| NH-565 | Grand Prix White |
| R-510 | New Formula Red |
| Y-52P | Indy Yellow Pearl (U.S. model only) |

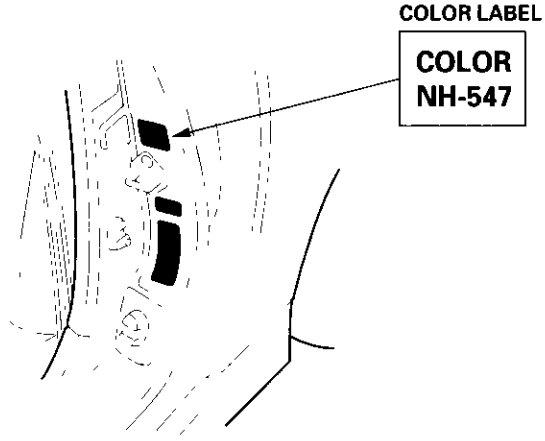

# Chassis and Paint Codes - 2003 Model

## Vehicle Identification Number

JHM AP1 1 4 * 3 T 000001

a b c d e f g h

a. **Manufacturer, Make and Type of Vehicle**
JHM: HONDA MOTOR CO., LTD
HONDA Passenger vehicle
b. **Line, Body and Engine Type**
AP1: S2000/F20C1
c. **Body Type and Transmission Type**
1: 2-door Convertible/6-speed Manual
d. **Vehicle Grade (Series)**
4: Base Model
e. **Check Digit**
f. **Model Year**
3: 2003
g. **Factory Code**
T: Tochigi Factory in Japan
h. **Serial Number**
U.S. model: 000001 -
Canada model: 800001

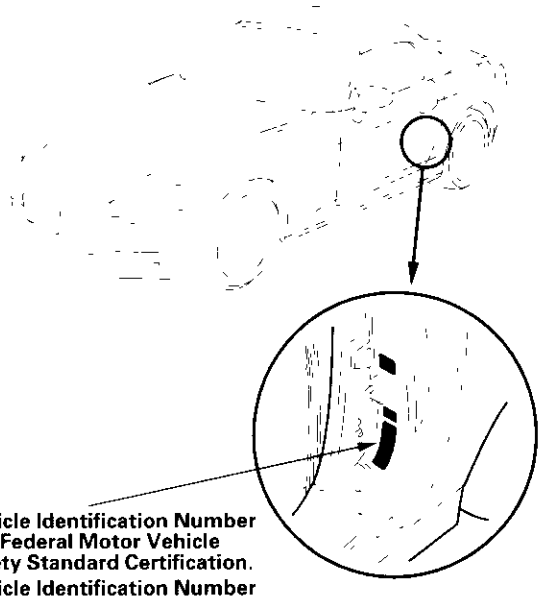

**Vehicle Identification Number and Federal Motor Vehicle Safety Standard Certification.**
**Vehicle Identification Number and Canadian Motor Vehicle Safety Standard Certification.**

## Engine Number

F20C1 - 1040001

a b

a. **Engine Type**
F20C1: 2.0 ℓ DOHC VTEC Sequential Multiport Fuel-injected engine
b. **Serial Number**
U.S. model: 1040001–
Canada model: 1130001

## Transmission Number

SCYM - 2000001

a b

a. **Transmission Type**
SCYM: 6-speed Manual
b. **Serial Number**

## Paint Code

| Code | Color |
|---|---|
| B-513M | Suzuka Blue Metallic (U.S. model only) |
| NH-547 | Berlina Black |
| NH-552M | Sebring Silver Metallic |
| NH-565 | Grand Prix White |
| R-510 | New Formula Red |
| Y-52P | Spa Yellow Pearl (U.S. model only) |
| NH-630M | Silverstone Metalic (U.S. model only) |

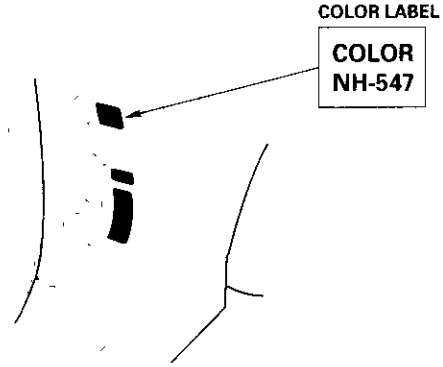

## Identification Number Locations

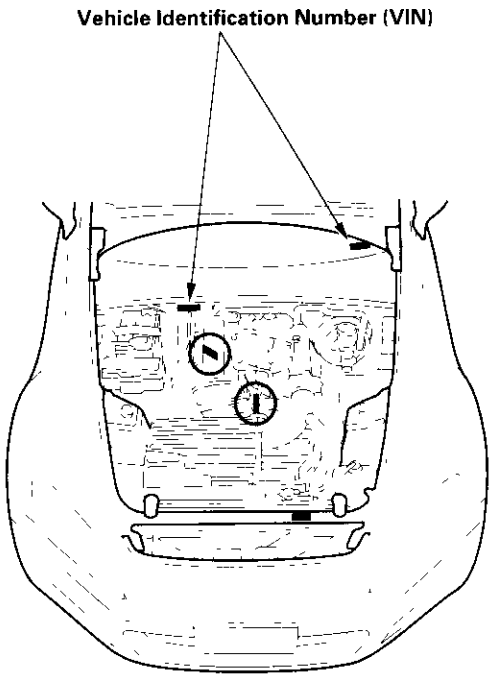


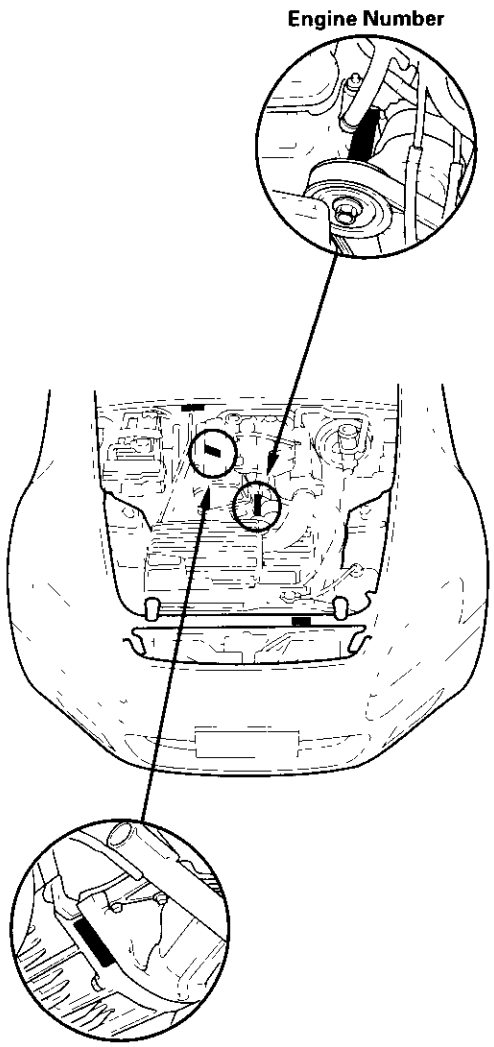

## Warning/Caution Label Locations

CABLE REEL CAUTION

SRS

INSTALLATION OF THE SRS CABLE REEL IS CRITICAL TO THE PROPER OPERATION OF THE SRS SYSTEM. REFER TO THE SERVICE MANUAL FOR DETAILED INSTALLATION INSTRUCTIONS.

DRIVER MODULE DANGER

**⚠ DANGER**

EXPLOSIVE/FLAMMABLE
STORAGE TEMPERATURES MUST NOT EXCEED 200°F (93°C). FOR PROPER HANDLING STORAGE AND DISPOSAL PROCEDURES, REFER TO SERVICE MANUAL SRS SUPPLEMENT.
FIRST AID
IF CONTENTS ARE SWALLOWED, INDUCE VOMITING. FOR EYE CONTACT, FLUSH EYES WITH WATER FOR 15 MINUTES. IN EVERY CASE, GET PROMPT MEDICAL ATTENTION.
KEEP OUT OF REACH OF CHILDREN.

**⚠ WARNING**

THE AIRBAG INFLATOR IS EXPLOSIVE AND, IF ACCIDENTALLY DEPLOYED, CAN SERIOUSLY HURT OR KILL YOU.

- DO NOT USE ELECTRICAL TEST EQUIPMENT OR PROBING DEVICES. THEY CAN CAUSE ACCIDENTAL DEPLOYMENT.
- NO SERVICEABLE PARTS INSIDE. DO NOT DISASSEMBLE.
- PLACE AIRBAG UPRIGHT WHEN REMOVED.
- FOLLOW SERVICE MANUAL INSTRUCTIONS CAREFULLY.

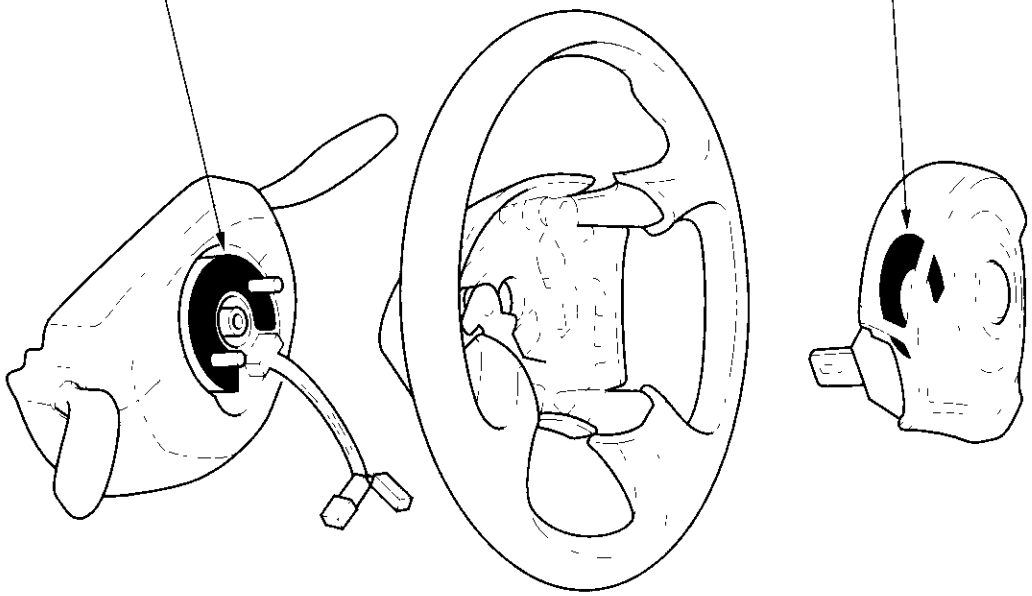

(cont'd)

## Warning/Caution Label Locations (cont'd)

SRS WARNING INFORMATION
U.S.A. model

**⚠ WARNING**

DEATH OR SERIOUS INJURY CAN OCCUR.
- CHILDREN 12 AND UNDER CAN BE KILLED BY THE AIRBAG.
- NEVER PUT A REAR-FACING CHILD SEAT IN THE FRONT.
- SIT AS FAR BACK AS POSSIBLE FROM THE AIRBAG.
- ALWAYS USE SEAT BELTS AND CHILD RESTRAINTS.

SRS INFORMATION
Canada model

CAUTION
TO AVOID SERIOUS INJURY:
- FOR MAXIMUM SAFETY PROTECTION IN ALL TYPES OF CRASHES, YOU MUST ALWAYS WEAR YOUR SAFETY BELT.
- DO NOT INSTALL REARWARD FACING CHILD SEATS IN ANY FRONT PASSENGER SEAT POSITION.
- DO NOT SIT OR LEAN UNNECESSARILY CLOSE TO THE AIRBAG.
- DO NOT PLACE ANY OBJECTS OVER THE AIRBAG OR BETWEEN THE AIRBAG AND YOURSELF.
- SEE THE OWNER'S MANUAL FOR FURTHER INFORMATION AND EXPLANATIONS.

SRS INFORMATION
U.S.A. model

AIRBAG WARNING
FLIP VISOR OVER.

FRONT PASSENGER MODULE DANGER

**⚠ DANGER**

EXPLOSIVE/FLAMMABLE
STORAGE TEMPERATURES MUST NOT EXCEED 200°F (93°C). FOR PROPER HANDLING STORAGE AND DISPOSAL PROCEDURES REFER TO SERVICE MANUAL SRS SUPPLEMENT.
FIRST AID
IF CONTENTS ARE SWALLOWED, INDUCE VOMITING.
FOR EYE CONTACT, FLUSH EYES WITH WATER FOR 15 MINUTES.
IN EVERY CASE, GET PROMPT MEDICAL ATTENTION.
KEEP OUT OF REACH OF CHILDREN.

**⚠ WARNING**

THE AIRBAG INFLATOR IS EXPLOSIVE AND, IF ACCIDENTALLY DEPLOYED, CAN SERIOUSLY HURT OR KILL YOU.
- DO NOT USE ELECTRICAL TEST EQUIPMENT OR PROBING DEVICES. THEY CAN CAUSE ACCIDENTAL DEPLOYMENT.
- NO SERVICEABLE PARTS INSIDE. DO NOT DISASSEMBLE.
- PLACE AIRBAG UPRIGHT WHEN REMOVED.
- FOLLOW SERVICE MANUAL INSTRUCTIONS CAREFULLY.

MONITOR NOTICE

NOTICE SRS
- NO SERVICEABLE PARTS INSIDE.
- REFER TO SERVICE MANUAL FOR DETAILED INSTRUCTIONS.

FRONT PASSENGER AIRBAG WARNING
(CHILD SEAT)

**⚠ WARNING**

CHILDREN CAN BE KILLED OR INJURED BY THE PASSENGER AIRBAG.
MAKE SURE ALL CHILDREN USE SEAT BELTS OR CHILD SEATS.

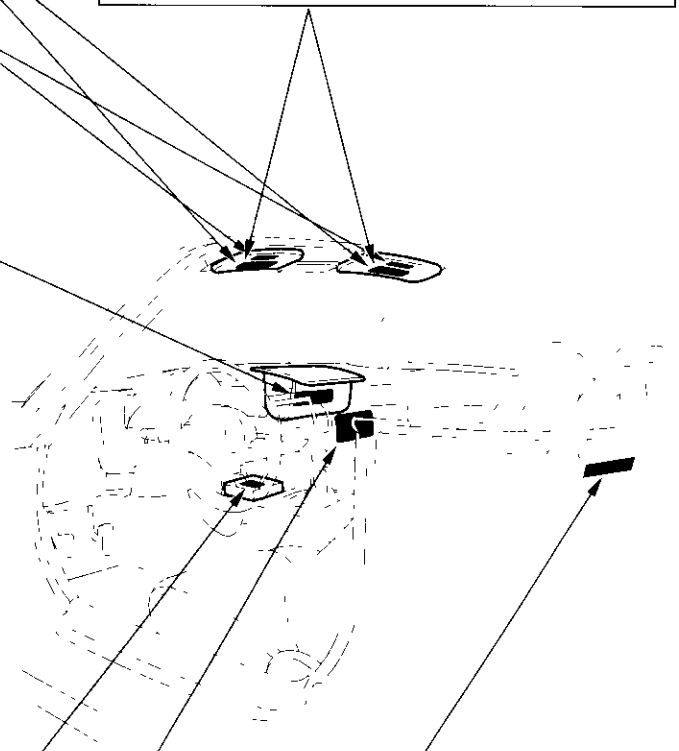

SEAT BELT TENSIONER WARNING

**⚠ WARNING**

EXPLOSIVE, MATERIAL INSIDE
YOU CAN BE SERIOUSLY HURT OR BURNED.
- DO NOT TAMPER OR DISASSEMBLE. NO SERVICEABLE PARTS INSIDE.
- REFER TO SERVICE MANUAL FOR COMPLETE INSTRUCTION.

SRS WARNING (HOOD)

SUPPLEMENTAL RESTRAINT SYSTEM (SRS)
THIS VEHICLE IS EQUIPPED WITH DRIVER AND FRONT SEAT PASSENGER AIRBAGS. ALL SRS ELECTRICAL WIRING AND CONNECTORS ARE COLORED YELLOW. TAMPERING WITH, DISCONNECTING, OR USING ELECTRICAL TEST EQUIPMENT ON THE SRS WIRING CAN MAKE THE SYSTEM INOPERATIVE OR CAUSE ACCIDENTAL FIRING OF THE INFLATOR.

**⚠ WARNING**

THE AIRBAG INFLATOR IS EXPLOSIVE AND, IF ACCIDENTALLY DEPLOYED, CAN SERIOUSLY HURT YOU.
FOLLOW SERVICE MANUAL INSTRUCTIONS CAREFULLY.

STEERING COLUMN NOTICE

NOTICE

TO PREVENT SRS DAMAGE, REMOVE STEERING WHEEL BEFORE REMOVING STEERING SHAFT CONNECTING BOLT.

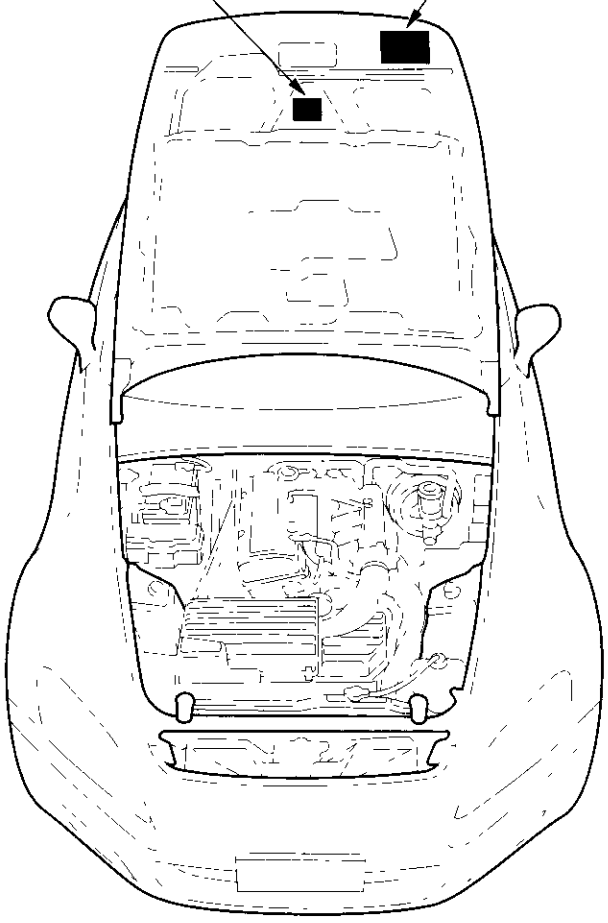

(cont'd)

## Warning/Caution Label Locations (cont'd)

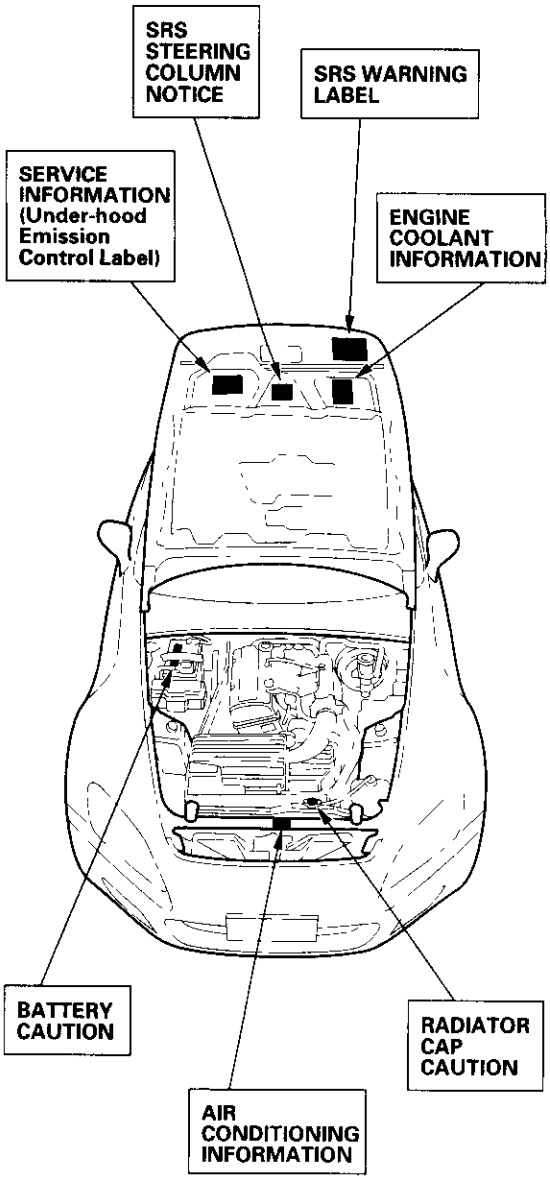


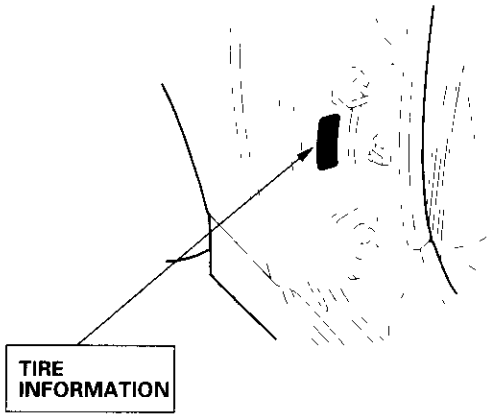

# Under-hood Emission Control Label (2000-2002 Models)

## Emission Group Identification

**Example:**

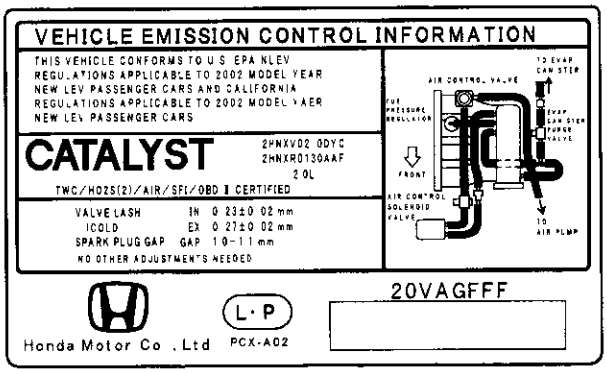


**2000 model:**
**FEDERAL**
THIS VEHICLE CONFORMS TO U.S. EPA NLEV REGULATIONS APPLICABLE TO 2000 MODEL YEAR NEW LEV PASSENGER CARS AND CALIFORNIA REGULATIONS APPLICABLE TO 2000 MODEL YEAR NEW LEV PASSENGER CAR.

**2001 model:**
**FEDERAL**
THIS VEHICLE CONFORMS TO U.S. EPA NLEV REGULATIONS APPLICABLE TO 2001 MODEL YEAR NEW LEV PASSENGER CARS AND CALIFORNIA REGULATIONS APPLICABLE TO 2001 MODEL YEAR NEW LEV PASSENGER CAR.

**CANADIAN TIER 1**
THIS VEHICLE CONFORMS TO CANADIAN TIER 1 STANDARDS FOR 2001 MODEL YEAR NEW PASSENGER CARS.

**2002 model:**
**FEDERAL and CANADIAN TIER 1**
THIS VEHICLE CONFORMS TO U.S. EPA NLEV REGULATIONS APPLICABLE TO 2002 MODEL YEAR NEW LEV PASSENGER CARS AND CALIFORNIA REGULATIONS APPLICABLE TO 2002 MODEL YEAR NEW LEV PASSENGER CARS.

## Engine and Evaporative Families:

**Engine Family:**

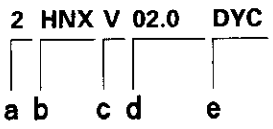


a. **Model Year**
   Y: 2000
   1: 2001
   2: 2002
b. **Manufacturer Subcode**
   HNX: HONDA
c. **Family Type**
   V: LDV
d. **Displacement**
e. **Sequence Characters**

**Evaporative Family:**

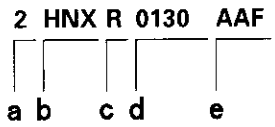


a. **Model Year**
   Y: 2000
   1: 2001
   2: 2002
b. **Manufacturer Subcode**
   HNX: HONDA
c. **Family Type**
   R: EVAP/ORVR
d. **Canister Work Capacity**
e. **Sequence Characters**

## Under-hood Emission Control Label (2003 Model)

### Emission Group Identification

**Example:**

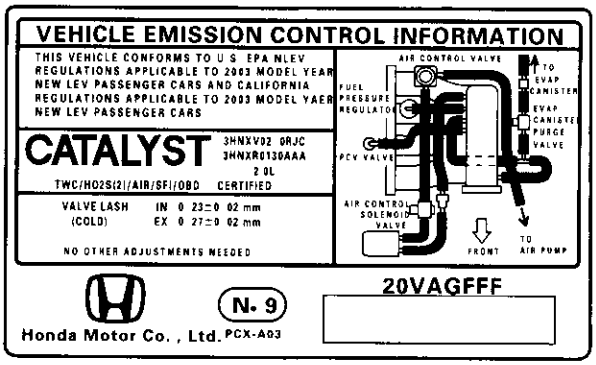


**2003 model:**
**FEDERAL and CANADIAN TIER 1**
THIS VEHICLE CONFORMS TO U.S. EPA NLEV REGULATIONS APPLICABLE TO 2003 MODEL YEAR NEW LEV PASSENGER CARS AND CALIFORNIA REGULATIONS APPLICABLE TO 2003 MODEL YEAR NEW LEV PASSENGER CARS.

### Engine and Evaporative Families:

**Engine Family:**

3 HNX V 02.0 RJC
a b c d e

a. **Model Year**
3: 2003
b. **Manufacturer Subcode**
HNX: HONDA
c. **Family Type**
V: LDV
d. **Displacement**
e. **Sequence Characters**

**Evaporative Family:**

2 HNX R 0130 AAA
a b c d e

a. **Model Year**
3: 2003
b. **Manufacturer Subcode**
HNX: HONDA
c. **Family Type**
R: EVAP/ORVR
d. **Canister Work Capacity**
e. **Sequence Characters**

# Lift and Support Points

If you are going to remove heavy components such as suspension or the fuel tank from the rear of the vehicle, first support the front of the vehicle with a tall safety stand. When substantial weight is removed from the rear of the vehicle, the center of gravity can change and cause the vehicle to tip forward on the hoist.

## Frame Hoist

1. Position the hoist lift blocks (A), or safety stands, under the vehicle's front support points (B) and rear support points (C).

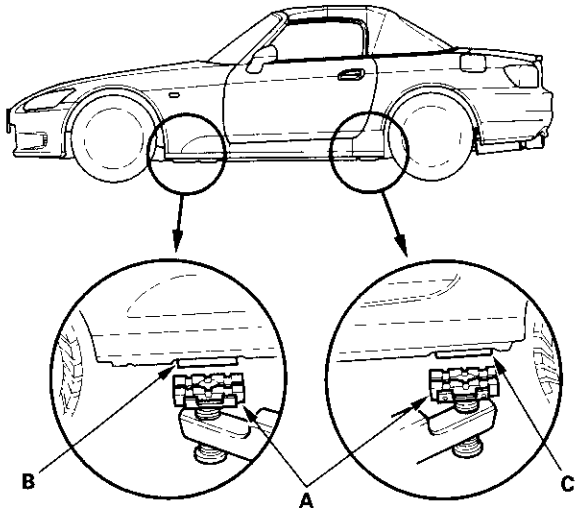


2. Raise the hoist a few inches, and rock the vehicle gently to be sure it is firmly supported.

3. Raise the hoist to full height, and inspect the lift points (B and C) for solid contact with the lift blocks.

## Safety Stands

To support the vehicle on safety stands, use the same support points (B and C) as for a frame hoist. Always use safety stands when working on or under any vehicle that is supported only by a jack.

## Floor Jack

1. Block the rear wheels when raising the front of the vehicle; block the front wheels when raising the rear of the vehicle.
   Place the blocks behind and ahead of the wheels.

2. Raise the vehicle high enough to insert the safety stands.

3. Adjust and place the safety stands so the vehicle will be approximately level, then lower the vehicle onto them.

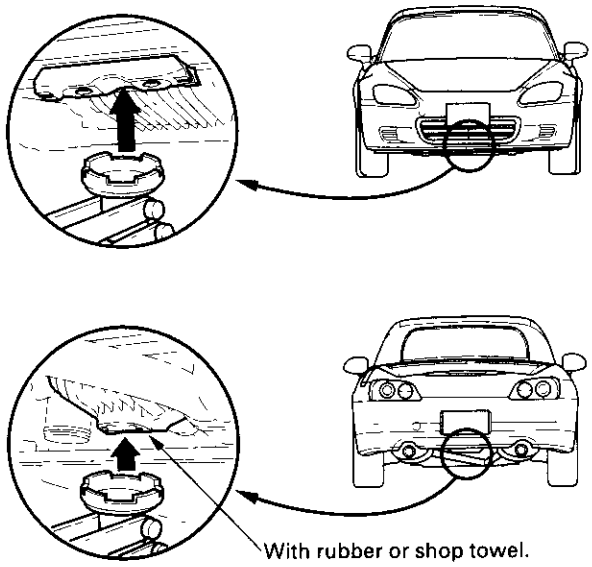

## Towing

If the vehicle needs to be towed, call a professional towing service. Never tow the vehicle behind another vehicle with just a rope or chain. It is very dangerous.

**Emergency Towing**

**Flat-bed Equipment**— The operator loads the vehicle on the back of a truck. This is the only recommended way of transporting the S2000.

**Tie Down Bracket Hole Locations:**

**Front:**

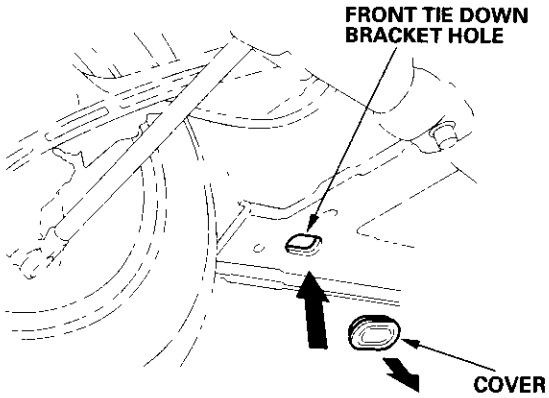


**Rear:**

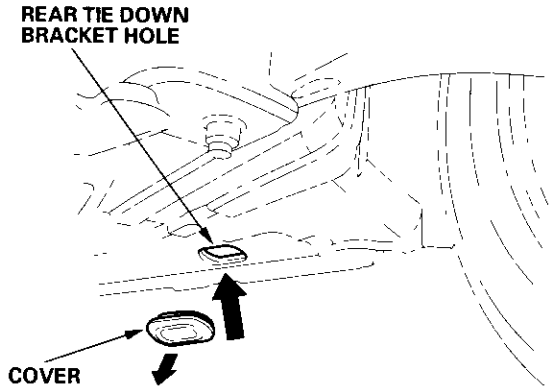


**NOTICE**

- This vehicle can only be transported on a flat-bed.
- Trying to lift or tow the vehicle by the bumpers will cause serious damage. The bumpers are not designed to support the vehicle's weight.

**Towing Hook Installation:**

**NOTICE**

To avoid damage to the car, use the towing hook for straight, flat ground towing only. Do not tow at an angle. The towing hook should not be used to tow the vehicle onto a flat bed. Do not use it as a tie down.

- Remove the cover from the rear or front bumper.
- Install the rear or front towing hook securely into the bolt hole behind the bumper through the opening.

The towing hook is located in the tool kit in the trunk.

**Rear:**

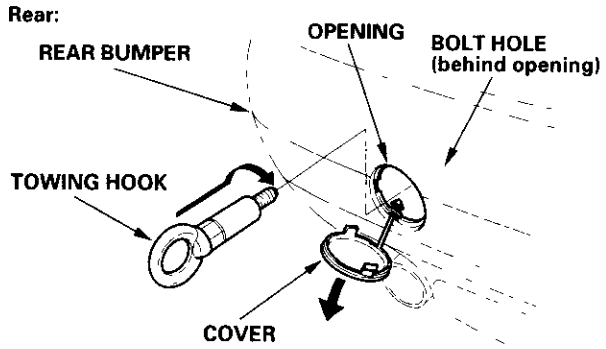


**Front:**

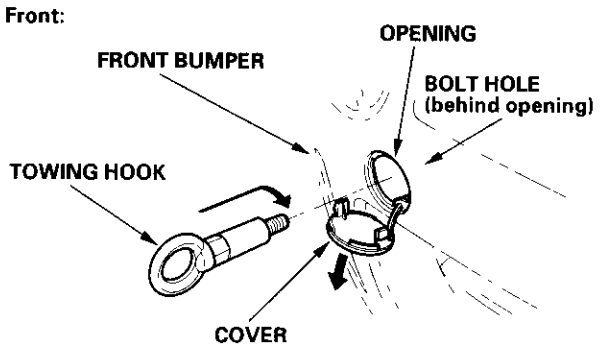

## Parts Marking

To deter vehicle theft, certain major components are marked with the vehicle identification number (VIN). Original parts have self-adhesive labels. Replacement body parts will have self-adhesive labels, and the replacement engine and transmission will have the VIN plate attached with a break-off bolt.

NOTE: Be careful not to damage the parts marking labels during body repair. Mask the labels before repairing the part.

## Service Precaution

### Adhesive Wheel Balance Weight

The wheels of this model are not designed to mount the balance weight on the outer side of the wheel. Instead, mount the self-adhesive balance weight on the inner side of the wheels. Note the following service tips and install the weights securely.

- Use only self-adhesive wheel balance weights to balance the wheels of the car.
- The wheels and weight must be 41°F (5°C) or above during installation.
- Do not damage the wheel when removing the balance weight.
- After removing the balance weight, remove the adhesive residue from the wheel using a degreasing cleaning agent.
- Remove dust and foreign material from the surface of the wheel and degrease the surface before applying the new balance weight.
- Use the IPA (isopropyl alcohol) or brake cleaner as the degreasing agent, and let the surface dry thoroughly after degreasing.
- Peel off the backing from the balance weight with care, do not touch the adhesive surface. Place the balance weight on the wheel lengthwise to the wheel.
- Press the entire surface of the balance weight with 5 to 7 kg of force so the balance weight's tape adheres to the wheel securely.
- Rock the balance weight lightly and make sure that it is properly secured to the wheel.
- Do not place one balance weight on top of another.
- When you cannot measure the amount of weight at the adhesion position with the wheel balance machine, take the amount of unbalance at the outer rim and calculate the amount of weight using the conversion factor below. Select the balance weight that is the closest to the calculation.
  Conversion factor for the adhesion position: Front wheel: 2.9
  Rear wheel: 2.5

**Example:**
If the unbalance at the front rim is 15 grams, it is calculated as ; 15 x 2.9 = 43.5 gr.
Therefore, the unbalance is 43.5 grams.

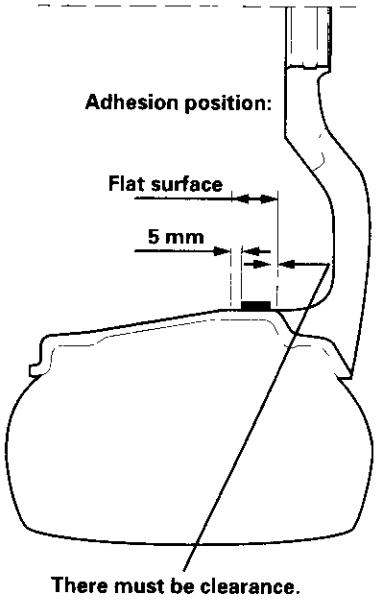


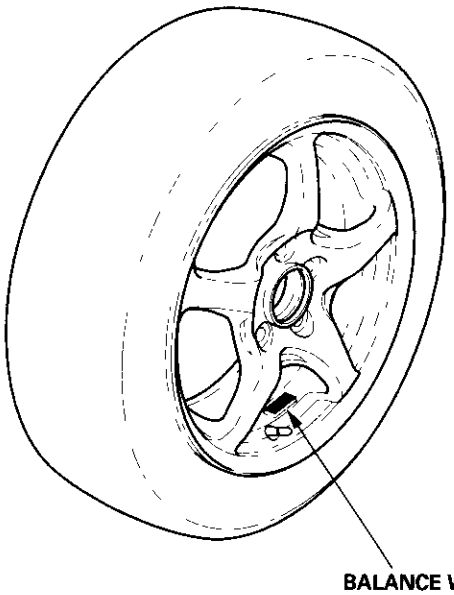

## Revised Component Terms

Beginning with '01 models, the following component terms have been changed to conform with the standards in SAE document J1930. If you find a term or abbreviation in a '01 or later manual that is unfamiliar to you, check this list. If a term is not listed below, it did not change.

| '00 and Earlier Models | | '01 or Later Models | |
|---|---|---|---|
| **Description** | **Honda Abbreviations** | **Description** | **New Abbreviations SAE recommendation** |
| Heated Oxygen Sensor (for some models) | HO2S | Air Fuel Ratio Sensor | A/F SENSOR |
| Brake Switch | | Brake Pedal Position Switch | BPP Switch |
| Clutch Switch | | Clutch Pedal Position Switch | |
| Distributor Ignition Rotor | DI Rotor | Distributor Rotor | |
| Function Sensor | | Engine Speed Fluctuation Sensor | RPM Fluctuation Sensor |
| Evaporative Emission Control Canister | EVAP Control Canister | Evaporative Emission Canister | EVAP Canister |
| Evaporative Emission Control Canister Vent Shut Valve | EVAP Control Canister Vent Shut Valve | Evaporative Emission Canister Vent Shut Valve | EVAP Canister Vent Shut Valve |
| Evaporative Emission Purge Control Solenoid Valve | EVAP Purge Control Solenoid Valve | Evaporative Emission Canister Purge Valve | EVAP Canister Purge Valve |
| Exhaust Gas Recirculation Valve Lift Sensor | EGR Valve Lift Sensor | Exhaust Gas Recirculation Valve Position Sensor | EGR Valve Position Sensor |
| Exhaust Gas Recirculation Control Solenoid Valve | EGR Control Solenoid Valve | Exhaust Gas Recirculation Valve Vacuum Control Solenoid Valve | EGR Valve Vacuum Control Solenoid Valve |
| Exhaust Gas Recirculation Vacuum Control Valve | EGR Vacuum Control Valve | Exhaust Gas Recirculation Valve Vacuum Control Solenoid Valve | EGR Valve Vacuum Control Solenoid Valve |
| Radiator Fan Control Module | | Fan Control Module | |
| Fuel Tank Evaporative Emission Valve | | Fuel Tank Vapor/Liquid Separation Valve | |
| ORVR Vent Shut Valve | | Fuel Tank Vapor Control Valve | |
| ORVR Vapor Recirculation Tube | | Fuel Tank Vapor Recirculation Tube | |
| First Idle Themo Valve | | Idle Air Control Thermal Valve | IAC Thermal Valve |
| Fuel Injector | | Injector | |
| Fuel Injection Air Control Valve | FIA Control Valve | Intake Air Bypass Control Valve | |
| Fuel Injection Air Control Solenoid Valve | FIA Control Solenoid Valve | Intake Air Bypass Control Themal Valve | |
| Intake Air Bypass Check Valve | IAB Check Valve | Intake Manifold Runner Control Vacuum Check Valve | IMRC Vacuum Check Valve |
| | | Intake Manifold Runner Control Actuator | IMRC Actuator |
| | | Intake Manifold Runner Control Actuator Wire | IMRC Actuator Wire |
| Intake Air Bypass Control Diaphragm | IAB Control Diaphragm | Intake Manifold Runner Control Actuator Diaphragm | IMRC Diaphragm |
| | | Intake Manifold Runner Control Module | IMRC Module |

(cont'd)

## Revised Component Terms (cont'd)

| '00 and Earlier Models | | '01 or Later Models | |
|---|---|---|---|
| Description | Honda Abbreviations | Description | New Abbreviations SAE recommendation |
| Intake Air Bypass Control Solenoid Valve | IAB Control Solenoid Valve | Intake Manifold Runner Control Solenoid Valve | IMRC Solenoid Valve |
| Intake Air Bypass Vacuum Tank | IAB Vacuum Tank | Intake Manifold Runner Control Vacuum | IMRC Vacuum Reservoir |
| Intake Air Bypass Valve Body Assembly | IAB Valve Body Assembly | Intake Manifold Runner Control Valve | IMRC Valve |
| Breather Chamber | | Oil/Air Separator | |
| Fuel Pressure Regulator Control Solenoid Valve | | Pressure Regulator Vacuum Control Solenoid Valve | |
| Air Control Valve Check Valve | | Secondary Air Injection Control Vacuum Check Valve | Air Control Vacuum Check Valve |
| Air Control Valve Vacuum Tank | | Secondary Air Injection Control Vacuum Reservoir | Air Control Vacuum Reservoir |
| Air Control Solenoid Valve | | Secondary Air Injection Control Vacuum Control Solenoid Valve | Air Control Valve Vacuum Control Solenoid Valve |
| Air Pump | | Secondary Air Injection Pump | Air Pump |
| Air Control Valve | | Secondary Air Injection Pump Control Valve | Air Control Valve |
| Air Pump Electric Current Sensor | | Secondary Air Injection Pump Electric Current Sensor | Air Pump Electric Current Sensor |
| Shift/Clutch Pressure Control Solenoid Valve Set | | Shift Solenoid and Automatic Transaxle Clutch Pressure Control Solenoid Valve Set | SS and A/T Clutch Pressure Control Solenoid Valve Set |
| Shift Control Solenoid Valve Set | | Shift Solenoid and Torque Converter Clutch Solenoid Valve Set | SS and TCC Solenoid Valve Set |
| Shift/Lock-up Clutch Control Solenoid Valve Assy | | Shift Solenoid and Torque Converter Clutch Solenoid Valve | SS and TCC Solenoid Valve |
| Shift Control Solenoid Valve A | | Shift Solenoid Valve A | SS Valve A |
| Shift Control Solenoid Valve B | | Shift Solenoid Valve B | SS Valve B |
| Throttle Valve Control Module | | Throttle Actuator | |
| Lock-up Clutch Control Solenoid Valve Set | | Torque Converter Clutch Solenoid and Automatic Transaxle Clutch Pressure Control Solenoid Valve Set | TCC Solenoid and A/T Clutch Pressure Control Solenoid Valve Set |
| Lock-up Clutch Control Solenoid Valve | | Torque Converter Clutch Solenoid Valve | TCC Solenoid Valve |
| Automatic Transaxle Position Switch | A/T Gear Position Switch | Transmission Range Switch | TR Switch |
| Variable Valve Timing and Valve Lift Electronic Control Pressure Switch | VTEC Pressure Switch | Variable Valve Timing and Valve Lift Electronic Control Pressure Switch | VTEC Oil Pressure Switch |

# Specifications

## Standards and Service Limits


Engine Electrical ..... 2-2
Engine Assembly ..... 2-2
Cylinder Head ..... 2-3
Engine Block ..... 2-4
Engine Lubrication ..... 2-4
Cooling ..... 2-5
Fuel and Emissions ..... 2-5
Clutch ..... 2-5
Manual Transmission ..... 2-6
Differential ..... 2-8
Steering ..... 2-8
Suspension ..... 2-8
Brakes ..... 2-9
Air Conditioning ..... 2-9


## Design Specifications


Dimensions ..... 2-10
Weight (U.S.A.) ..... 2-10
Weight (CANADA) ..... 2-10
Engine ..... 2-10
Starter ..... 2-10
Clutch ..... 2-10
Manual Transmission ..... 2-10
Differential ..... 2-10
Steering ..... 2-11
Suspension ..... 2-11
Wheel Alignment ..... 2-11
Brakes ..... 2-11
Tires ..... 2-11
Air Conditioning ..... 2-11
Electrical Ratings ..... 2-12


## Body Specifications


Illustration ..... 2-13

# Standards and Service Limits

## Engine Electrical

| Item | Measurement | Qualification | Standard or New | Service Limit |
|---|---|---|---|---|
| Ignition coil | Rated voltage | | 12 V | |
| | Firing order | | 1 3-4-2 | |
| Spark plug | Type | | NGK: PFR7G-11S<br>DENSO: PK22PR-L11S | |
| | Gap | | 1.0 1.1 mm (0.039-0.043 in.) | 1.3 mm (0.051 in.) |
| Ignition timing | | At idle (check the *red* mark) | 5±2°BTDC at 800±50 rpm in neutral | |
| Alternator-compressor belt | Tension adjustment | | Auto adjuster type | |
| Alternator | Output | At 13.5 V and normal engine temperature | 105 A | |
| | Brush length | | 10.5 mm (0.41 in.) | 1.5 mm (0.06 in.) |
| Starter | Output | | 1.0 kW | |
| | Commutator mica depth | | 0.4-0.5 mm<br>(0.016-0.020 in.) | 0.15 mm (0.006 in.) |
| | Commutator runout | | 0.02 mm (0.001 in.) max. | 0.05 mm (0.002 in.) |
| | Commutator O.D. | | 28.0-28.1 mm (1.102-1.106 in.) | 27.5 mm (1.083 in.) |
| | Brush length | | 15.8-16.2 mm (0.62-0.64 in.) | 11.0 mm (0.43 in.) |
| | Brush spring tension (new) | | 15.7-17.7 N (1.60-1.80 kgf, 3.53-3.97 lbs) | |

## Engine Assembly

| Item | Measurement | Qualification | Standard or New | Service Limit |
|---|---|---|---|---|
| Compression | Pressure<br>Check at 250 rpm with wide open throttle.<br>(See Design Specs for ratio.) | Nominal | 1,570 kPa<br>(16.0 kgf/cm², 228 psi) | ——— |
| | | Minimum | 930 kPa<br>(9.5 kgf/cm², 135 psi) | ---- |
| | | Maximum variation | 200 kPa<br>(2.0 kgf/cm², 28 psi) | — |

## Cylinder Head

| Item | Measurement | Qualification | Standard or New | Service Limit |
|---|---|---|---|---|
| Head | Warpage | | — | 0.05 mm (0.002 in.) |
| | Height | | 104.95 – 105.05 mm (4.132 – 4.136 in.) | — |
| Camshaft | End play | | 0.05 – 0.15 mm (0.002 – 0.006 in.) | 0.30 mm (0.012 in.) |
| | Camshaft-to-holder oil clearance | | 0.060 – 0.099 mm (0.002 – 0.004 in.) | 0.15 mm (0.006 in.) |
| | Total runout | | 0.03 mm (0.001 in.) max. | 0.04 mm (0.002 in.) |
| | Cam lobe height | Intake, primary | 33.677 mm (1.326 in.) | — |
| | | Intake, mid | 36.533 mm (1.438 in.) | — |
| | | Intake, secondary | 33.961 mm (1.337 in.) | — |
| | | Exhaust, primary | 33.716 mm (1.327 in.) | — |
| | | Exhaust, mid | 35.928 mm (1.414 in.) | — |
| | | Exhaust, secondary | 33.994 mm (1.338 in.) | — |
| Valves | Clearance (cold) | Intake | 0.21 – 0.25 mm (0.008 – 0.010 in.) | — |
| | | Exhaust | 0.25 – 0.29 mm (0.010 – 0.011 in.) | — |
| | Stem O.D. | Intake | 5.48 – 5.49 mm (0.2157 – 0.2162 in.) | 5.45 mm (0.215 in.) |
| | | Exhaust | 5.45 – 5.46 mm (0.2146 – 0.2150 in.) | 5.42 mm (0.213 in.) |
| | Stem-to-guide clearance | Intake | 0.02 – 0.05 mm (0.001 – 0.002 in.) | 0.08 mm (0.003 in.) |
| | | Exhaust | 0.05 – 0.08 mm (0.002 – 0.003 in.) | 0.11 mm (0.004 in.) |
| Valve seats | Width | Intake | 1.05 – 1.35 mm (0.041 – 0.053 in.) | 1.80 mm (0.071 in.) |
| | | Exhaust | 1.25 – 1.55 mm (0.049 – 0.061 in.) | 2.00 mm (0.079 in.) |
| | Stem installed height | Intake | 44.1 – 44.4 mm (1.736 – 1.748 in.) | 44.7 mm (1.760 in.) |
| | | Exhaust | 44.2 – 44.5 mm (1.740 – 1.752 in.) | 44.8 mm (1.764 in.) |
| Valve springs | Free length | Intake | 49.77 mm (1.959 in.) | — |
| | | Exhaust | 50.39 mm (1.984 in.) | — |
| Valve guides | I.D. | Intake | 5.510 – 5.530 mm (0.2169 – 0.2177 in.) | 5.55 mm (0.219 in.) |
| | | Exhaust | 5.510 – 5.530 mm (0.2169 – 0.2177 in.) | 5.55 mm (0.219 in.) |
| | Installed height | Intake | 15.2 – 16.2 mm (0.598 – 0.638 in.) | — |
| | | Exhaust | 16.0 – 17.0 mm (0.630 – 0.669 in.) | — |
| Rocker arms | Arm-to-shaft clearance | Intake | 0.021 – 0.041 mm (0.0008 – 0.0016 in.) | 0.07 mm (0.003 in.) |
| | | Exhaust | 0.021 – 0.041 mm (0.0008 – 0.0016 in.) | 0.07 mm (0.003 in.) |

# Standards and Service Limits

## Engine Block

| Item | Measurement | Qualification | Standard or New | Service Limit |
|---|---|---|---|---|
| Block | Warpage of deck | | 0.07 mm (0.003 in.) max. | 0.10 mm (0.004 in.) |
| | Bore diameter | A or I | 87.010–87.020 mm (3.4256–3.4260 in.) | 87.070 mm (3.4279 in.) |
| | | B or II | 87.000–87.010 mm (3.4252–3.4256 in.) | 87.070 mm (3.4279 in.) |
| | Bore taper | | — — — | 0.05 mm (0.002 in.) |
| | Reboring limit | | — — | 0.25 mm (0.01 in.) |
| Piston | Skirt | No letter | 86.993–87.006 mm (3.4292–3.4254 in.) | 86.980 mm (3.4244 in.) |
| | | Letter B | 86.983–86.996 mm (3.4245–3.4250 in.) | 86.970 mm (3.4240 in.) |
| | Clearance in cylinder | | 0.004–0.027 mm (0.0002–0.0011 in.) | 0.04 mm (0.002 in.) |
| | Ring groove width | Top | 1.235–1.265 mm (0.0486–0.0498 in.) | 1.285 mm (0.0506 in.) |
| | | Second | 1.230–1.245 mm (0.0484–0.0490 in.) | 1.265 mm (0.0498 in.) |
| | | Oil | 2.005–2.025 mm (0.0789–0.0797 in.) | 2.05 mm (0.081 in.) |
| Piston rings | Ring-to-groove clearance | Top | 0.045–0.090 mm (0.0018–0.0035 in.) | 0.135 mm (0.005 in.) |
| | | Second | 0.040–0.070 mm (0.0016–0.0028 in.) | 0.13 mm (0.005 in.) |
| | Ring end gap | Top | 0.25–0.35 mm (0.010–0.014 in.) | 0.60 mm (0.024 in.) |
| | | Second | 0.60–0.75 mm (0.024–0.030 in.) | 0.90 mm (0.035 in.) |
| | | Oil | 0.20–0.70 mm (0.008–0.028 in.) | 0.80 mm (0.031 in.) |
| Piston pin | O.D. | | 22.961–22.965 mm (0.9040–0.9041 in.) | 22.953 mm (0.9037 in.) |
| | Pin-to-piston clearance | | −0.003–+0.0060 mm (−0.00012–+0.00024 in.) | 0.010 mm (0.0004 in.) |
| Connecting rod | Pin-to-rod clearance | | 0.018–0.035 mm (0.0007–0.0014 in.) | 0.04 mm (0.0016 in.) |
| | Small-end bore diameter | | 22.961–22.965 mm (0.9040–0.9041 in.) | — — — |
| | Large-end bore diameter | Nominal | 51.0 mm (2.01 in.) | — — — |
| | End play installed on crankshaft | | 0.15–0.30 mm (0.006–0.012 in.) | 0.40 mm (0.016 in.) |
| Crankshaft | Main journal diameter | | 54.976–55.000 mm (2.1644–2.1654 in.) | — — |
| | Rod journal diameter | | 47.976–48.000 mm (1.8888–1.8898 in.) | — — — |
| | Rod/main journal taper | | 0.005 mm (0.0002 in.) max. | 0.006 mm (0.0002 in.) |
| | Rod/main journal out-of-round | | 0.004 mm (0.0002 in.) max. | 0.006 mm (0.0002 in.) |
| | End play | | 0.10–0.35 mm (0.004–0.014 in.) | 0.45 mm (0.018 in.) |
| | Runout | | 0.03 mm (0.001 in.) max. | 0.04 mm (0.002 in.) |
| Crankshaft bearings | Main bearing-to-journal oil clearance | | 0.017–0.041 mm (0.0007–0.0016 in.) | 0.050 mm (0.0020 in.) |
| | Rod bearing clearance | | 0.030–0.054 mm (0.0012–0.0021 in.) | 0.060 mm (0.0024 in.) |

## Engine Lubrication

| Item | Measurement | Qualification | Standard or New | Service Limit |
|---|---|---|---|---|
| Engine oil | Capacity | | 5.6 ℓ (5.9 US qt, 4.9 Imp qt) for engine overhaul<br>4.8 ℓ (5.1 US qt, 4.2 Imp qt) for oil change, including filter<br>4.5 ℓ (4.8 US qt, 4.0 Imp qt) for oil change, without filter | |
| Oil pump | Inner-to-outer rotor clearance | | 0.02–0.15 mm (0.001–0.006 in.) | 0.20 mm (0.008in.) |
| | Pump housing-to-outer rotor clearance | | 0.15–0.21 mm (0.006–0.008 in.) | 0.23 mm (0.009 in.) |
| | Pump housing-to-outer rotor axial clearance | | 0.02–0.07 mm (0.001–0.003 in.) | 0.12 mm (0.005 in.) |
| | Oil pressure with oil temperature at 176°F (80°C) | At idle | 250 kPa (2.5 kgf/cm², 36 psi) | |
| | | At 3,000 rpm | 590 kPa (6.0 kgf/cm², 85 psi) | |

## Cooling

| Item | Measurement | Qualification | Standard or New | Service Limit |
|---|---|---|---|---|
| Radiator | Coolant capacity (includes engine, heater, hoses and reservoir) | Engine overhaul | 7.6 ℓ (8.0 US qt, 6.7 Imp qt) | |
| | | Coolant change | 6.5 ℓ (6.9 US qt, 5.7 Imp qt) | |
| Reservoir | Coolant capacity | | 0.6 ℓ (0.6 US qt, 0.5 Imp qt) | |
| Radiator cap | Opening pressure | | 93 – 123 kPa (0.95 – 1.25 kgf/cm², 14 – 18 psi) | |
| Thermostat | Opening temperature | Begins to open | 169 – 176°F (76 – 80°C) | |
| | | Fully open | 194°F (90°C) | |
| | Valve lift at fully open | | 10.0 mm (0.39 in.) min. | |
| Cooling fan switch | Thermoswitch "ON" temperature | | 196 – 203°F (91 – 95°C) | |
| | Thermoswitch "OFF" temperature | | Subtract 5 – 15°F (3 – 8°C) from actual "ON" temperature | |

## Fuel and Emissions

| Item | Measurement | Qualification | Standard or New | Service Limit |
|---|---|---|---|---|
| Fuel Pressure regulator | Pressure with regulator vacuum hose disconnected | | 320 - 370 kPa (3.3 – 3.8 kgf/cm², 47 – 54 psi) | |
| Fuel tank | Capacity | | 50 ℓ (13.2 US gal, 11.0 Imp gal) | |
| Engine idle | Idle speed with headlights and radiator fan off | In Neutral | 800 ± 50 rpm | |
| | Idle CO % | | 0.1 max. | |

## Clutch

| Item | Measurement | Qualification | Standard or New | Service Limit |
|---|---|---|---|---|
| Clutch pedal | Height | From the floor | 189 mm (7.44 in.) | — |
| | Stroke | | 115 – 125 mm (4.53 - 4.92 in.) | ——— |
| | Play | | 9 – 17 mm (0.4 – 0.7in.) | ——— |
| Flywheel | Runout on clutch mating surface | | 0.05 mm (0.002 in.) max. | 0.15 mm (0.006 in.) |
| Clutch disc | Rivet head depth | | 1.2 – 1.7 mm (0.047 – 0.067 in.) | 0.2 mm (0.008 in.) |
| | Rivet head thickness | | 8.2 – 8.9 mm (0.32 – 0.35 in.) | 6.0 mm (0.241 in.) |
| Pressure plate | Warpage | | 0.03 mm (0.001 in.) max. | 0.15 mm (0.006 in.) |
| | Height of diaphragm spring fingers | Measure with feeler gauge and special tool | 0.4 mm (0.016 in.) max. | 0.6 mm (0.024 in.) |

# Standards and Service Limits

## Manual Transmission

| Item | Measurement | Qualification | Standard or New | Service Limit |
|---|---|---|---|---|
| Transmission fluid | Capacity | At fluid change | 1.48 ℓ (1.56 US qt., 1.30 Imp qt) | ——— |
| | | At overhaul | 1.62 ℓ (1.71 US qt., 1.43 Imp qt) | ——— |
| Mainshaft | End play | | 0.14 – 0.21 mm (0.006 – 0.008 in.) | Adjust |
| | Diameter of transmission housing ball bearing contact area | | 27.987 – 28.000 mm (1.1018 – 1.1024 in.) | 27.94 mm (1.100 in.) |
| | Diameter of 4th/5th gears contact area | | 34.987 – 35.000 mm (1.3774 1.3780 in.) | 34.94 mm (1.376 in.) |
| | Diameter of 6th gear contact area | | 38.984 – 39.000 mm (1.5348 – 1.5354 in.) | 38.94 mm (1.533 in.) |
| | Diameter of clutch housing ball bearing contact area | | 28.002 - 28.015 mm (1.1024 – 1.1030 in.) | 27.95 mm (1.100 in.) |
| | Runout | | 0.02 mm (0.001in.) max. | 0.05 mm (0.002 in.) |
| Mainshaft 3rd gear | I.D. | | 40.009 – 40.025 mm (1.5752 – 1.5758 in.) | ——— |
| | Thickness | | 35.09 – 35.17 mm (1.381 – 1.385 in.) | 34.97 mm (1.377 in.) |
| | End play | | 0.06 – 0.19 mm (0.002 – 0.007 in.) | 0.3 mm (0.012 in.) |
| Mainshaft 3rd gear distance collar | I.D. | | 28.002 – 28.012 mm (1.1024 – 1.1028 in.) | ——— |
| | O.D. | | 34.989 – 35.000 mm (1.3775 1.3780 in.) | ——— |
| | Length | | 35.23 - 35.28 mm (1.387 – 1.389 in.) | ——— |
| Mainshaft 4th and 5th gears | I.D. | | 47.009 – 47.025 mm (1.8507 – 1.8514 in.) | ——— |
| | Thickness | | 31.89 – 31.97 mm (1.256 – 1.259 in.) | 31.77 mm (1.251 in.) |
| | End play | | 0.06 - 0.19 mm (0.002 – 0.007 in.) | 0.3 mm (0.012 in.) |
| Mainshaft 4th and 5th gears distance collar | I.D. | | 35.002 35.012 mm (1.3780 – 1.3784 in.) | ——— |
| | O.D. | | 41.989 – 42.000 mm (1.6531 – 1.6535 in.) | ——— |
| | Length | | 32.03 – 32.08 mm (1.261 – 1.263 in.) | ——— |
| Mainshaft 6th gear | I.D. | | 44.009 – 44.025 mm (1.7326 – 1.7333 in.) | ——— |
| | Thickness | | 28.89 – 28.97 mm (1.137 – 1.141 in.) | 28.77 mm (1.133 in) |
| | End play | | 0.06 – 0.19 mm (0.002 - 0.007 in.) | 0.3 mm (0.012 in) |
| Countershaft | Diameter of rear side cover needle bearing contact area | | 30.020 – 30.029 mm (1.1819 – 1.1822 in.) | 29.97 mm (1.180 in.) |
| | Diameter of transmission housing side needle bearing contact area | | 34.002 34.018 mm (1.3387 – 1.3393 in.) | 33.95 mm (1.337 in.) |
| | Diameter of 2nd gear contact area | | 43.984 – 44.000 mm (1.7317 – 1.7323 in.) | 43.93 mm (1.730 in.) |
| | Diameter of clutch housing side ball bearing conntact area | | 28.002 – 28.015 mm (1.1024 – 1.1030 in.) | 27.95 mm (1.100 in.) |
| | Runout | | 0.02 mm (0.001 in.) max. | 0.05 mm (0.002 in.) |
| Countershaft 1st gear | I.D. | | 57.010 – 57.029 mm (2.2445 – 2.2452 in.) | ——— |
| | Thickness | | 31.18 – 31.26 mm (1.228 – 1.231 in.) | 31.06 mm (1.223 in.) |
| | End play | | 0.04 – 0.22 mm (0.002 – 0.009 in.) | 0.3 mm (0.012 in.) |
| Countershaft 1st gear distance collar | O.D. | | 50.987 – 51.000 mm (2.0074 – 2.0079 in.) | |
| | Length | | 28.03 - 28.08 mm (1.104 – 1.106 in.) | |
| Countershaft 2nd gear | I.D. | | 43.984 - 44.000 mm (1.7317 – 1.7323 in.) | |
| | Thickness | | 32.88 – 32.96 mm (1.294 - 1.298 in.) | 32.76 mm (1.290 in.) |
| | End play | | 0.04 - 0.17 mm (0.002 0.007 in.) | 0.3 mm (0.012 in.) |

| Item | Measurement | Qualification | Standard or New | Service Limit |
|---|---|---|---|---|
| Countershaft reverse gear | I.D. | | 50.009 – 50.025 mm (1.9689 – 1.9695 in.) | — |
| | Thickness | | 26.38 – 26.46 mm (1.039 - 1.042 in.) | 26.26 mm (1.034 in.) |
| | End play | | 0.04 - 0.22 mm (0.002 – 0.009 in.) | 0.3 mm (0.012 in.) |
| Countershaft reverse gear distance collar | O.D. | | 37.989 – 38.000 mm (1.4956 – 1.4961 in.) | — |
| | Length | | 25.53 – 25.58 mm (1.005 – 1.007 in.) | — |
| Secondary shaft | Diameter of ball bearing contact area | | 31.002 – 31.013 mm (1.2205 – 1.2210 in.) | 30.95 mm (1.219 in.) |
| | Diameter of propeller shaft side tapered roller bearing contact area | | 41.002 – 41.018 mm (1.6142 – 1.6149 in.) | 40.95 mm (1.612 in.) |
| | Diameter of transmission housing side tapered roller bearing contact area | | 35.009 – 35.025 mm (1.3783 – 1.3790 in.) | 34.96 mm (1.376 in.) |
| | Runout | | 0.02 mm (0.001 in.) max. | 0.05 mm (0.002 in.) |
| | Starting torque (preload) | | 1.86 – 2.84 N·m (19.0 – 29.0 kgf-cm, 16.5 – 25.2lbf·in) | Adjust |
| Shift fork | Finger thickness | 1-2 shift fork | 7.4 7.6 mm (0.29 – 0.30 in.) | — |
| | | 3-4 shift fork | 6.2 – 6.4 mm (0.24 – 0.25 in.) | — |
| | | 5-6 shift fork | 6.2 6.4 mm (0.24 – 0.25 in.) | — |
| | | Reverse shift fork | 6.2 – 6.4 mm (0.24 – 0.25 in.) | — |
| | Fork-to-synchro sleeve clearance | | 0.35 – 0.65 mm (0.014 – 0.026 in.) | 1.00 mm (0.039 in.) |
| | Groove | To 1-2 shift lever | 17.2 - 17.4 mm (0.677 – 0.685 in.) | 17.1 mm (0.673 in.) |
| | | To shift arm A | 17.2 - 17.4 mm (0.677 – 0.685 in.) | 17.1 mm (0.673 in.) |
| Shift arm A | I.D. | | 16.000 – 16.027 mm (0.6299 – 0.6310 in.) | — |
| | Finger width | | 16.8 – 17.0 mm (0.661 – 0.669 in.) | 16.7 mm (0.657 in.) |
| | Shift arm A-to-shift forks | | 0.2 – 0.6 mm (0.008 – 0.024 in.) | 0.7 mm (0.028 in.) |
| 1-2 shift lever | Finger width | | 17.0 – 17.2 mm (0.669 – 0.677 in.) | 16.9 mm (0.665 in.) |
| | Lever-to-shift forks and pieces clearance | | 0 0.4 mm (0 – 0.016 in.) | 0.5 mm (0.020 in.) |
| 1-2 shift piece | Groove | To shift arm A | 17.2 – 17.4 mm (0.677 – 0.685 in.) | 17.1 mm (0.673 in.) |
| 3-4 shift piece | Groove | To shift arm A | 17.2 – 17.4 mm (0.677 – 0.685 in.) | 17.1 mm (0.673 in.) |
| Reverse shift piece | Groove | To 1-2 shift arm A | 17.2 - 17.4 mm (0.677 – 0.685 in.) | 17.1 mm (0.673 in.) |
| | | To shift arm A | 17.2 – 17.4 mm (0.677 - 0.685 in.) | 17.1 mm (0.673 in.) |
| Synchro ring | Ring-to-gear clearance (ring pushed against gear) | 5th and 6th gears | 0.75 – 1.00 mm (0.030 – 0.039 in.) | 0.4 mm (0.016 in.) |
| | | Reverse gear | 0.85 1.10 mm (0.033 – 0.043 in.) | 0.4 mm (0.016 in.) |
| Double cone | Outer syncro ring-to-synchro cone clearance (ring pushed against gear) | 1st and 2nd gears | 0.70 – 1.09 mm (0.028 – 0.043 in.) | 0.3 mm (0.012 in.) |
| | | 3rd and 4th gears | 0.90 – 1.39 mm (0.035 – 0.055 in.) | 0.3 mm (0.012 in.) |
| | Synchro cone-to-gear clearance (ring pushed against gear) | 1st, 3rd and 4th gears | 0.50 – 1.04 mm (0.020 – 0.041 in.) | 0.3 mm (0.012 in.) |
| | | 2nd gear | 0.65 – 1.78 mm (0.026 – 0.070 in.) | 0.3 mm (0.012 in.) |
| | Outer synchro ring-to-gear clearance (ring pushed against gear) | 1st, 3rd and 4th gears | 0.95 – 1.68 mm (0.037 – 0.066 in.) | 0.6 mm (0.024 in.) |
| | | 2nd gear | 0.70 – 1.82 mm (0.028 – 0.072 in.) | 0.6 mm (0.024 in.) |
| Oil pump | Inner rotor-to-outer rotor radial clearance | | 1.14 mm (0.006 in.) max. | 0.20 mm (0.008 in.) |
| | Rotor-to-transmission housing clearance | Radial clearance | 0.1 - 0.2 mm (0.004 – 0.008 in.) | 0.22 mm (0.009 in.) |
| | | Axial clearance | 0.03 – 0.07 mm (0.001 – 0.003 in.) | Adjust |

# Standards and Service Limits

## Differential

| Item | Measurement | Qualification | Standard or New | Service Limit |
|---|---|---|---|---|
| Differential oil | Capacity | At oil change | 0.74 ℓ (0.78 US qt., 0.65 Imp qt) | |
| | | At overhaul | 0.77 ℓ (0.81 US qt., 0.68 Imp qt) | |
| Drive pinion | Starting torque (preload)<br>(Add additional value to actual starting torque measurement) | Additional value | 0.88 - 1.37 N·m<br>(9.0 – 14.0 kgf-cm, 7.81 – 12.2 lbf-in) | Adjust |
| Ring gear | Backlash to drive pinion | | 0.09 – 0.11 mm (0.0035 – 0.0043 in) | Adjust |
| Differential | Total starting torque | measured with push/pull gauge | 14 – 30 N<br>(1.4 3.1 kgf, 1.2 – 2.7 lbf) | Adjust |

## Steering

| Item | Measurement | Qualification | Standard or New | Service Limit |
|---|---|---|---|---|
| Steering wheel | Rotational play measured at outside edge | With engine running | 0 – 10 mm (0 – 0.39 in.) | ———— |
| | Starting load measured at outside edge | With engine running | 34 N (3.5 kgf, 7.7 lbf) | ———— |
| Gearbox | Angle of rack guide screw loosened from locked position | | 10° – 20° | |

## Suspension

| Item | Measurement | Qualification | Standard or New | Service Limit |
|---|---|---|---|---|
| Wheel alignment | Camber | Front at inspection | −0°30′ +30′ | |
| | | Front at adjustment | −0°30′ ± 10′ | |
| | | Rear at inspection | −1°30′ ± 30′ | |
| | | Rear at adjustment | −1°30′ ± 10′ | |
| | Caster | Front at inspection | 6°00′ ± 45′ | |
| | | Rear at adjustment | 6°00′ ± 15′ | |
| | Total Toe | Front | 0 ± 2 mm (0 ± 1/16 in.) | |
| | | Rear | IN 6 ± 2 (1/4 ± 1/16 in.) | |
| | Front wheel turning angle | Inside wheel | 34°00′ ± 2° | |
| | | Outside wheel | 29°00′ (Reference) | |
| Aluminum wheel | Runout | Axial | 0 0.7 mm (0 – 0.03 in.) | 2.0 mm (0.08 in.) |
| | | Radial | 0 - 0.7 mm (0 – 0.03 in.) | 1.5 mm (0.06 in.) |
| Wheel bearings | End play | Front | 0 – 0.05 mm (0 – 0.002 in.) | |
| | | Rear | 0 – 0.05 mm (0 - 0.002 in.) | |

## Brakes

| Item | Measurement | Qualification | Standard or New | Service Limit |
|---|---|---|---|---|
| Parking brake lever | Distance traveled when pulled with 196 N (20 kgf, 44 lbf) of force | | 9–13 clicks should lock the brakes | |
| Brake pedal | Pedal height (carpet removed) | | 179 mm (7 1/16 in.) | |
| | Free play | | 1–5 mm (1/16–3/16 in.) | |
| Master cylinder | Piston-to-pushrod clearance | | 0–0.4 mm (0–0.02 in.) | |
| Brake disc | Thickness | Front | 24.9–25.1 mm (0.98–0.99 in.) | 23.0 mm (0.91 in.) |
| | | Rear | 11.9–12.1 mm (0.469–0.476 in.) | 10.0 mm (0.39 in.) |
| | Runout | Front | ——— | 0.10 mm (0.004 in.) |
| | | Rear | ——— | 0.10 mm (0.004 in.) |
| | Parallelism | Front and rear | ——— | 0.015 mm (0.0006 in.) |
| Brake pads | Thickness | Front | 9.5–10.5 mm (0.37–0.41 in.) | 1.6 mm (0.06 in.) |
| | | Rear | 8.9–9.1 mm (0.35–0.36 in.) | 1.6 mm (0.06 in.) |

## Air Conditioning

| Item | Measurement | Qualification | Standard or New | Service Limit |
|---|---|---|---|---|
| Refrigerant | Type | | HFC-134a (R-134a) | |
| | Capacity of system | | 600–650 g (21–23 oz) | |
| Refrigerant oil | Type | | SP-10 (P/N 38897-P13-A01AH or 38899-P13-A01) | |
| | Capacity of components | Condenser | 25 mℓ (5/6 fl oz, 0.9 Imp oz) | |
| | | Evaporator | 40 mℓ (1 1/3 fl oz, 1.4 Imp oz) | |
| | | Each line and hose | 10 mℓ (1/3 fl oz, 0.4 Imp oz) | |
| | | Receiver | 10 mℓ (1/3 fl oz, 0.4 Imp oz) | |
| | | Compressor | 130–150 mℓ (4.4–5.1 fl oz, 4.6–5.3 Imp oz) | |
| Compressor | Field coil resistance | At 68°F (20°C) | 3.05–3.35 Ω | |
| | Pulley-to-pressure plate clearance | | 0.5±0.15 mm (0.02±0.006 in.) | |

# Design Specifications

| Item | Measurement | Qualification | Specification |
|---|---|---|---|
| DIMENSIONS | Overall length | | 4,120 mm (162.2 in.) |
| | Overall width | | 1,750 mm (68.9 in.) |
| | Overall height | | 1,285 mm (50.6 in.) |
| | Wheelbase | | 2,400 mm (94.5 in.) |
| | Track | Front | 1,470 mm (57.9 in.) |
| | | Rear | 1,510 mm (59.5 in.) |
| | Ground clearance | | 130 mm (5.1 in.) |
| | Seating capacity | | Two |
| WEIGHT (U.S.A.) | Gross Vehicle Weight Rating (GVWR) | | 3,385 lbs |
| WEIGHT (CANADA) | Gross Vehicle Weight Rating (GVWR) | | 1,535 kg |
| ENGINE | Type | | Water-cooled, 4-stroke DOHC VTEC gasoline engine |
| | Cylinder arrangement | | Inline 4-cylinder, longitudinal |
| | Bore and stroke | | 87.0 x 84.0 mm (3.43 x 3.31 in.) |
| | Displacement | | 1,997 $cm^3$ (mℓ) (121.9 cu in.) |
| | Compression ratio | | 11.0 |
| | Valve train | | Chain driven, DOHC VTEC 4 valves per cylinder |
| | Lubrication system | | Forced, wet sump, with trochoid pump |
| | Oil pump displacement | At 6,000 engine rpm | 58.4 ℓ (61.7 US qt, 51.4 Imp qt)/minute |
| | Water pump displacement | At 6,000 engine rpm | 172 ℓ (182 US qt, 151 Imp qt)/minute |
| | Fuel required | | Premium UNLEADED gasoline with 91 Pump Octane Number or higher |
| STARTER | Type | | Gear reduction |
| | Normal output | | 1.0 kW |
| | Nominal voltage | | 12 V |
| | Hour rating | | 30 seconds |
| | Direction of rotation | | Clockwise as viewed from gear end |
| CLUTCH | Clutch | | Single plate dry, diaphram spring |
| | Clutch friction material surface area | | 188 $cm^2$ (29 sq-in.) |
| MANUAL TRANSMISSION | Type | | Synchronized 6-speed forward, 1 reverse |
| | Primary reduction | | Direct 1:1 |
| | Gear ratio | 1st | 3.133 |
| | | 2nd | 2.045 |
| | | 3rd | 1.481 |
| | | 4th | 1.161 |
| | | 5th | 0.970 |
| | | 6th | 0.810 |
| | | Reverse | 2.800 |
| | Secondary reduction gear | Type | Single helical gear |
| | | Gear ratio | 1.160 |
| DIFFERENTIAL | Final reduction gear | Type | Spiral bevel gear |
| | | Gear ratio | 4.100 |

| Item | Measurement | Qualification | Specification |
|---|---|---|---|
| STEERING | Type | | Electric, power-assisted rack and pinion |
| | Overall ratio | | 13.9 |
| | Turns, lock-to-lock | | 2.4 |
| | Steering wheel diameter | | 360 mm (14.1 in.) |
| SUSPENSION | Type | Front | Independent double wishbone, coil spring with stabilizer |
| | | Rear | Independent double wishbone, coil spring with stabilizer |
| | Shock absorber | Front and rear | Telescopic, hydraulic, nitrogen gas-filled |
| WHEEL ALIGNMENT | Camber | Front | −0°30′ |
| | | Rear | −1°30′ |
| | Caster | Front | 6°00′ |
| | Total toe | Front | 0 mm (0 in.) |
| | | Rear | In 6 mm (1/4 in.) |
| BRAKES | Type of service brake | Front | Power-assisted self-adjusting ventilated disc |
| | | Rear | Power-assisted self-adjusting solid disc |
| | Type of parking brake | | Mechanical actuating, rear wheels |
| | Pad friction surface area | Front | 42 $cm^2$ x 2 (6.5 sq in x 2) |
| | | Rear | 28 $cm^2$ x 2 (4.3 sq in x 2) |
| TIRES | Size of tires | Front | 205/55 R16 89W |
| | | Rear | 225/50 R16 92W |
| | Size of spare tire | | T125/70 D16 96M |
| AIR CONDITIONING | Cooling capacity | | 3,320 Kcal/h (13,170 BTU/h) |
| | Compressor | Type/Manufacturer | Scroll/KEIHIN |
| | | Number of cylinders | ——— |
| | | Capacity | 85.7 mℓ/rev. (5.23 cu in/rev.) |
| | | Maximum speed | 12,000 rpm |
| | | Lubricant capacity | 130 mℓ (4 1/3 fl oz) |
| | | Lubricant type | SP-10 |
| | Condenser | Type | Corrugated fin |
| | Evaporator | Type | Corrugated fin |
| | Blower | Type | Sirocco fan |
| | | Motor input | 220 W/12 V |
| | | Speed control | 7-speed manual A/C |
| | | Maximum capacity | 430 $m^3$/h (15,200 cu ft/h) |
| | Temperature control | | Air-mix type |
| | Refrigerant | Type | HFC-134 a (R-134 a) |
| | | Quantity | 600 − 650 g (21 - 23 fl oz) |

# Design Specifications

| Item | Measurement | Qualification | Specification |
|---|---|---|---|
| ELECTRICAL RATINGS | Battery | | 12 V – 36 AH/5 hours |
| | Starter | | 12 V – 1.0 kW |
| | Alternator | | 12 V – 105 A |
| | Fuses | Under-hood fuse/relay box | 100A, 40A, 30A, 20A, 15A, 10A, 7.5A |
| | | Under-hood sub fuse/relay box | 70A, 60A, 30A, 20A |
| | | Under-dash fuse/relay box | 20A, 15A, 10A, 7.5A |
| | Light bulbs | Headlight high beam | 12 V – 55 W |
| | | Headlight low beam | 12 V – 35 W |
| | | Front turn signal lights | 12 V – 21 W |
| | | Rear turn signal lights | 12 V – 21 W |
| | | Brake/Taillights | 12 V – 21/5 W |
| | | High mount brake light | LED |
| | | Back-up lights | 12 V – 21 W |
| | | License plate light | 12 V – 5 W |
| | | Trunk light | 12 V – 3.4 W |
| | | Spotlights | 12 V – 5 W |
| | | Gauge lights | 12 V – 3 W, 2W |
| | | Indicator lights | 12 V – 1.12 W, 1.4 W |
| | | Panel and pilot lights | 12 V – 0.56 W, 0.91 W, LED |

# Body Specifications

Unit: mm (in.)

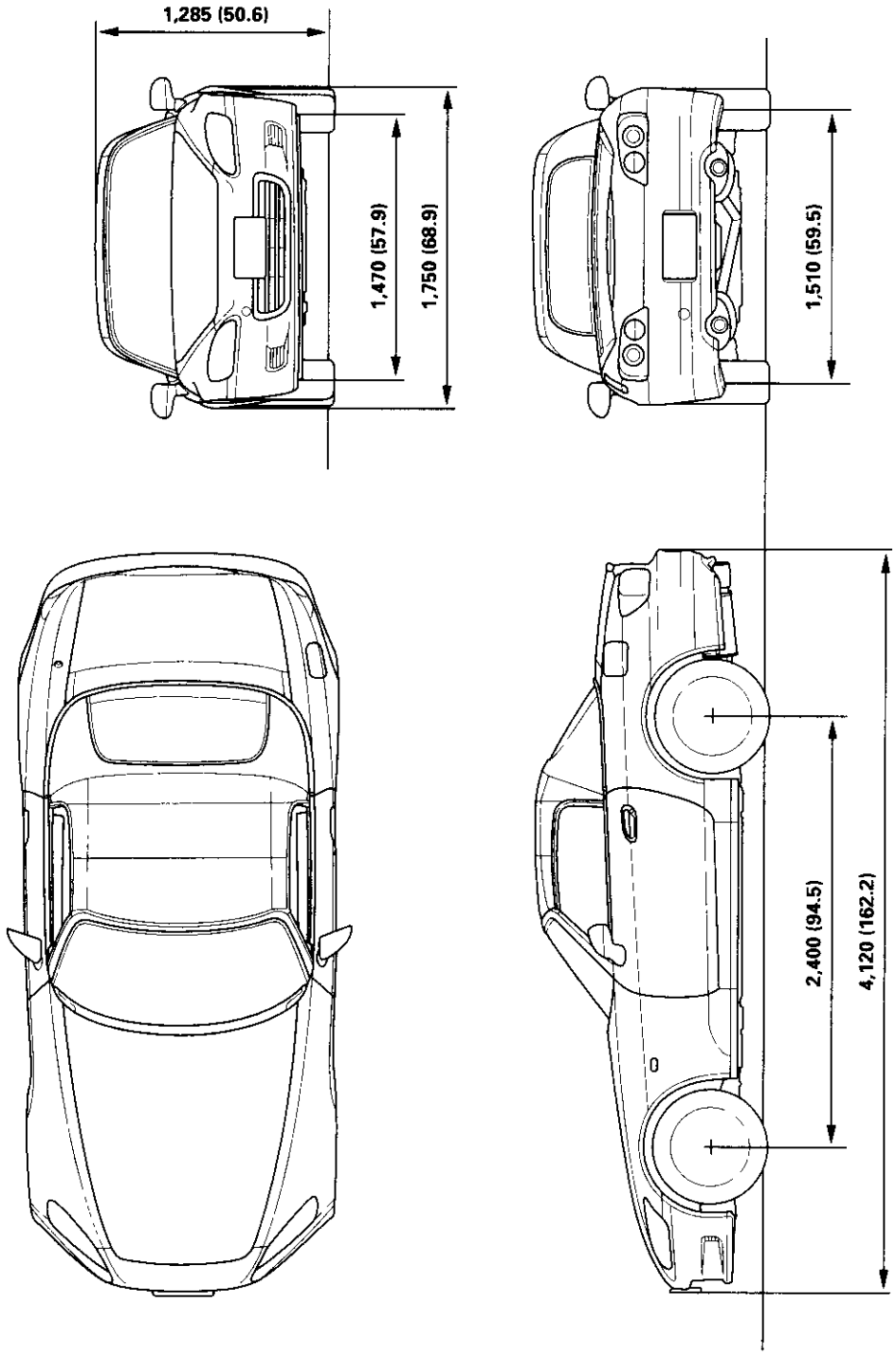

# Maintenance

**Lubricants and Fluids** ..... **3-2**

**Maintenance Schedule for Normal Conditions (2000 Model)**
Listed by Distance/Time ..... 3-4

**Maintenance Schedule for Severe Conditions (2000 Model)**
Listed by Distance/Time ..... 3-6

**Maintenance Schedule for Normal and Severe Conditions (2000 Model)**
Listed by Maintenance/Item ..... 3-8

**Maintenance Schedule for Normal Conditions (2001-2003 Models)**
Listed by Distance/Time ..... 3-10

**Maintenance Schedule for Severe Conditions (2001-2003 Models)**
Listed by Distance/Time ..... 3-12

**Maintenance Schedule for Normal and Severe Conditions (2001-2003 Models)**
Listed by Maintenance/Item ..... 3-14

# Lubricants and Fluids

For the details of lubrication points and type of lubricants to be applied, refer to the illustrated index and various work procedures (such as Assembly/Reassembly, Replacement, Overhaul, Installation, etc.) contained in each section.

| NO. | LUBRICATION POINTS | LUBRICANT |
|---|---|---|
| 1 | Engine | Honda Motor Oil (American Honda P/N 08798-9023, Honda Canada P/N CA66806). 10W-30 is the preferred motor oil for optimum fuel economy and year round protection. Look for the API. Certification seal shown below. Make sure it says "For Gasoline Engines." |
| 2 | Transmission | Honda MTF (P/N 08798-9016)*1 |
| 3 | Brake line (includes ABS line) | Honda DOT 3 Brake Fluid (P/N 08798-9008)*2 |
| 4 | Clutch line | Honda DOT 3 Brake Fluid (P/N 08798-9008)*2 |
| 5<br>6<br>7 | Release fork<br>Shift lever pivot<br>Slave cylinder | Super High Temp Urea Grease (P/N 08798-9002) |
| 8 | Throttle cable end (Dashboard lower panel hole) | Silicone grease |
| 9<br>10<br>11<br>12<br>13<br>14<br>15<br>16 | Throttle cable end (Throttle link)<br>Brake master cylinder pushrod<br>Battery terminals<br>Fuel fill door<br>Hood hinges and hood latch<br>Trunk hinges and latch<br>Door hinges, upper and lower<br>Door opening detent | Multi-purpose grease |
| 17 | Caliper piston seal, Dust seal, Caliper pin, Piston | Honda Caliper Grease (P/N 08C30-BC234M) |
| 18 | Air conditioning compressor | Compressor oil: SANDEN: SP-10 (P/N 38897-P13-A01 AH or 38899-P13-A01)<br>For Refrigerant: HFC-134 a (R-134 a) |
| 19 | Differential | Hypoid gear oil<br>API classification GL5 or GL6,<br>Viscosity: SAE 90 |

**API CERTIFICATION SEAL**




**Recommended Engine Oil**

Engine oil viscosity for ambient temperature ranges

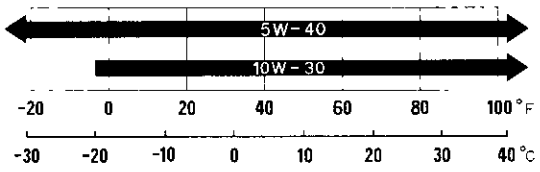


* 1: Always use Honda Manual Transmission Fluid (MTF). Using motor oil can cause stiffer shifting because it does not contain the proper additives.
* 2: Always use Honda DOT 3 Brake Fluid. Using a non-Honda brake fluid can cause corrosion and decrease the life of the system.

NOTE:
Lubricate all hinges, latches, and locks once a year.
In corrosive areas, more frequent lubrication is necessary.
We recommend Honda White Lithium Grease.

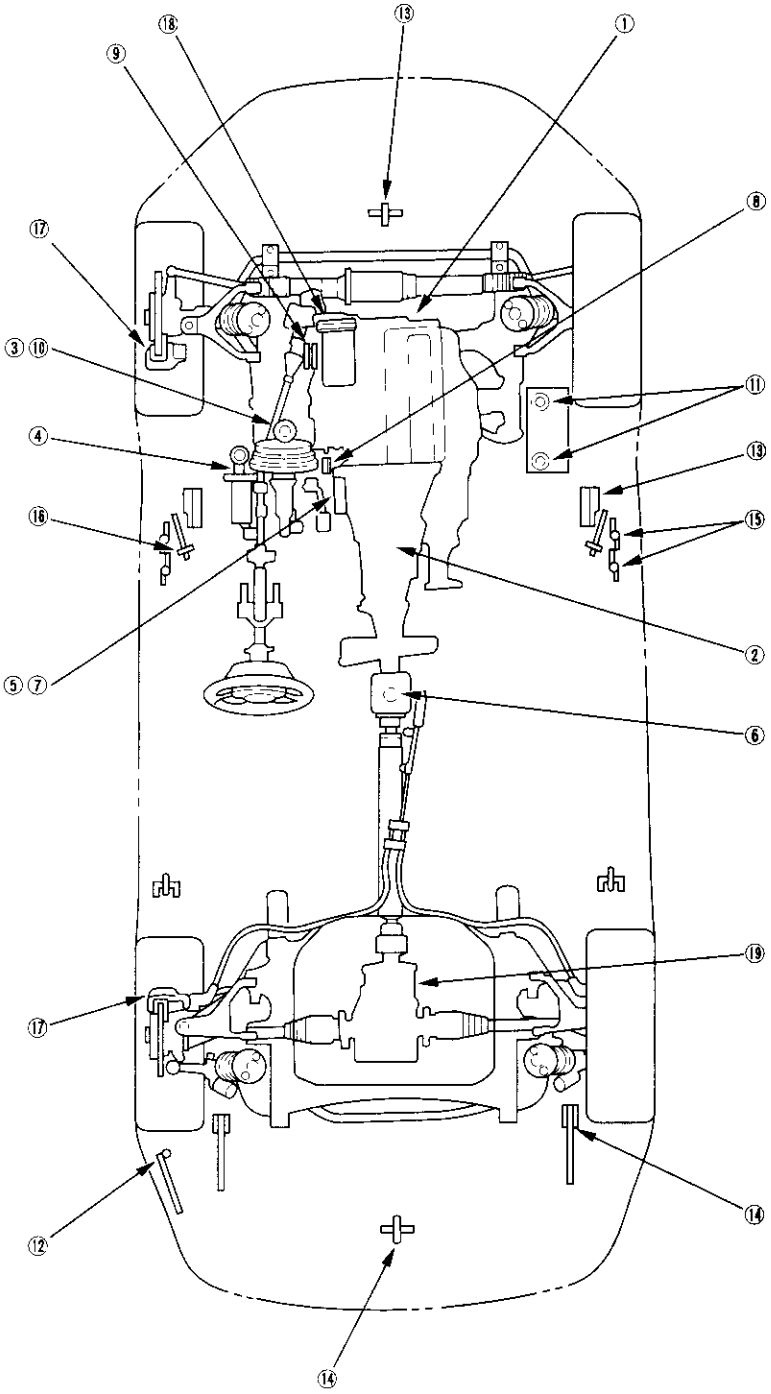

# Maintenance Schedule for Normal Conditions (2000 Model)

## Listed by Distance/Time

Service at the indicated distance or time, whichever comes first. For Canada models, this two-page Maintenance Schedule outlines the minimum required maintenance.
According to state and federal regulations, failure to do the maintenance items marked with asterisk ( * ) will not void customer's emissions warranties. However, Honda recommends that all maintenance services be done at the recommended interval to ensure long-term reliability.

| | |
|---|---|
| 7,500 mi/ 12,000 km/ — | ☐ Do items in A. |
| 15,000 mi/ 24,000 km/ 1 year | ☐ Do items in A and B. |
| 22,500 mi/ 36,000 km/— | ☐ Do items in A. |
| 30,000 mi/ 48,000 km/ 2 years | ☐ Do items in A, B, and C. |
| 37,500 mi/ 60,000 km/ — | ☐ Do items in A. |
| 45,000 mi/ 72,000 km/ 3 years | |
| ☐ Replace coolant (see page 10-8) Capacity: 6.5 ℓ (6.9 US qt, 5.7 Imp qt). Use Honda All Season Antifreeze/coolant Type 2. | |
| ☐ Replace brake fluid (see page 19-8). Use Honda DOT 3 Brake Fluid. Fill to between marks on reservoir. | |
| ☐ Do items in A and B. | |
| 52,500 mi/ 84,000 km/ — | ☐ Do items in A. |
| 60,000 mi/ 96,000 km/4 years | ☐ Do items in A, B, and C. |
| 67,500 mi/108,000 km/ — | ☐ Do items in A. |
| 75,000 mi/120,000 km/ 5 years | |
| ☐ Replace coolant (see page 10-8) Capacity: 6.5 ℓ (6.9 US qt, 5.7 Imp qt). Use Honda All Season Antifreeze/coolant Type 2. | |
| ☐ Do items in A and B. | |
| 82,500 mi/132,000 km/— | ☐ Do items in A. |
| 90,000 mi/144,000 km/ 6 years | |
| ☐ Replace transmission fluid. 1.48 ℓ (1.56 US qt, 1.30 Imp qt). Use Honda MTF (see page 13-3). | |
| ☐ Replace brake fluid (see page 19-8). Use Honda DOT 3. Fill to between marks on reservoir. | |
| ☐ Do items in A, B, and C. | |
| 97,500 mi/156,000 km/ — | ☐ Do items in A. |
| 105,000 mi/168,000 km/ 7 years | |
| ☐ Check idle speed. Should be 800±50 rpm in neutral (see page 11-100). | |
| ☐ Replace coolant (see page 10-8). Capacity: 6.5 ℓ (6.9 US qt, 5.7 Imp qt). Use Honda All Season Antifreeze/coolant Type 2. | |
| ☐ Inspect valve clearance (cold) Intake: 0.21 – 0.25 mm (0.008 – 0.010 in.) Exhaust: 0.25 – 0.29 mm (0.010 – 0.011 in.) (see page 6-39). | |
| ☐ Replace spark plugs. Use NGK (PFR7G – 11) or DENSO (PK22PR – L11). Gap: 1.0 – 1.1 mm (0.039 – 0.043 in.) (see page 4-19). | |
| ☐ Do items in A and B. | |
| 112,500 mi/181,000 km/ — | ☐ Do items in A. |
| 120,000 mi/192,000 km/ 8 years | ☐ Do the items in A, B, and C. |

Do the items in parts A, B, and C as required for mileage/time interval listed.

**A**

- ☐ Replace engine oil (see page 8-5). Capacity without filter change: 4.5 ℓ (4.8 US qt, 4.0 Imp qt), with filter change: 4.8 ℓ (5.1 US qt, 4.2 Imp qt).
- ☐ Check tire inflation and condition.

**B**

- ☐ Replace engine oil filter (see page 8-6).
- ☐ Inspect front and rear brakes (see page 19-12).
  - Check pads and discs for wear (thickness), damage, and cracks.
  - Check calipers for damage, leaks, and tightness of mount bolts.
- ☐ Check parking brake adjustment. Should be fully applied within 9 to 13 clicks.
- ☐ Inspect tie-rod ends, steering gearbox, and boots (see page 17-5).
  - Check rack grease and steering linkage.
  - Check boots for damage and leaking grease.
  - Check fluid line for damage and leaks.
- ☐ Inspect suspension components.
  - Check bolts for tightness.
  - Check condition of ball joint boots for deterioration and damage.
- ☐ Inspect driveshaft boots. Check boots for cracks and boot bands for tightness (see page 16-3).
- ☐ Inspect brake hoses and lines (including ABS). —Check the master cylinder, proportioning control valve, and ABS modulator for damage and leakage (see page 19-26).
- ☐ Check all fluid levels and condition of fluids; check for leaks. If necessary, add MTF (see page 13-3), engine coolant, brake fluid, and windshield washer fluid.
- ☐ Inspect cooling system hoses and connections (see page 10-2).
  - Check for damage, leaks, and deterioration.
  - Check for proper fan operation.
- ☐ Inspect exhaust system*. Check catalytic converter heat shield, exhaust pipe, and muffler for damage, leaks, and tightness (see page 9-4).
- ☐ Inspect fuel lines and connections*. Check for loose connections, cracks and deterioration; retighten loose connections and replace damaged parts (see page 11-101).

**C**

- ☐ Replace air cleaner element.
- ☐ Inspect drive belt, for cracks and damage.
  - Alternator compressor belt : Inspect auto tensioner indicator, Needs no adustment (see page 4-25).
- ☐ Replace differential oil. 0.74 ℓ (0.78 US qt, 0.65 Imp qt). Use hypoid gear oil GL5 or GL6 (see page 15-6).
- ☐ Replace the air conditioning filter (see page 21-42).
  - Replace it twice as often (at 30,000 mile interval) if the vehicle is driven mostly in urban areas that have high concentrations of soot in the air from industry and diesel-powered vehicles.
  - Replace it whenever airflow from the climate control system is less than normal.

# Maintenance Schedule for Severe Conditions (2000 Model)

## Listed by Distance/Time

Service at the indicated distance or time, whichever comes first. Use this schedule if the vehicle is driven MAINLY in Canada or in any of the following conditions; if only OCCASIONALLY driven in these conditions, use the Normal Conditions schedule (see page 3-4).
According to state and federal regulations, failure to do the maintenance items marked with asterisk ( * ) will not void customer's emissions warranties. *However, Honda recommends that all maintenance services be done at the recommended interval to ensure long-term reliability.*

**Severe Driving Conditions**

- Less than 5 miles (8 km) per trip or, in freezing temperatures, less than 10 miles (16 km) per trip
- In extremely; hot weather (over 90°F/32°C)
- Extensive idling or long periods of stop-and-go driving
- Trailer towing, driving in mountains
- On muddy, dusty, or de-iced roads

| | |
|---|---|
| 3,750 mi/ 6,000 km/ 6 months | ☐ Replace oil and filter. |
| 7,500 mi/ 12,000 km/ — | ☐ Do items in A. |
| 11,250 mi/ 18,000 km/ — | ☐ Replace oil and filter. |
| 15,000 mi/ 24,000 km/ 1 year | ☐ Do items in A and B. |
| 18,750 mi/ 30,000 km/ — | ☐ Replace oil and filter. |
| 22,500 mi/ 36,000 km/ 1 1/2 years | ☐ Do items in A. |
| 26,250 mi/ 42,000 km/ — | ☐ Replace oil and filter |
| 30,000 mi/ 48,000 km/ 2 years | ☐ Do items in A, B, and C |
| 33,750 mi/ 54,000 km/ — | ☐ Replace oil and filter. |
| 37,500 mi/ 60,000 km/ 2 1/2 years | ☐ Do items in A. |
| 41,250 mi/ 66,000 km/ — | ☐ Replace oil and filter. |

45,000 mi/ 72,000 km/ 3 years

- ☐ Replace coolant (see page 10-8). Use Honda All Season Antifreeze/coolant Type 2.
  - Capacity: 6.5 ℓ (6.9 US qt, 5.7 Imp qt).
- ☐ Replace brake fluid (see page 19-8).
  - Use Honda DOT 3.
  - Fill to between marks on reservoir.
- ☐ Do items in A and B.

| | |
|---|---|
| 48,750 mi/ 78,000 km/ — | ☐ Replace oil and filter. |
| 52,500 mi/ 84,000 km/ 3 1/2 years | ☐ Do items in A. |
| 56,250 mi/ 90,000 km/ — | ☐ Replace oil and filter. |
| 60,000 mi/ 96,000 km/ 4 years | ☐ Do items in A, B and C. |
| 63,750 mi/102,000 km/ — | ☐ Replace oil and filter. |
| 67,500 mi/108,000 km/ 4 1/2 years | ☐ Do items in A. |
| 71,250 mi/114,000 km/ — | ☐ Replace oil and filter. |

75,000mi/120,000 km/ 5 years

- ☐ Replace coolant (see page 10-8). Use Honda All Season Antifreeze/coolant Type 2.
  - Capacity: 6.5 ℓ (6.9 US qt, 5.7 Imp qt)
- ☐ Do items in A and B.

| | |
|---|---|
| 78,750 mi/126,000 km/ — | ☐ Replace oil and filter. |
| 82,500 mi/132,000 km/ 5 1/2 years | ☐ Do items in A. |
| 86,250 mi/138,000 km/ — | ☐ Replace oil and filter. |

90,000 mi/144,000 km/ 6 years

- ☐ Replace brake fluid (see page 19-8).
  - Use Honda DOT 3 brake fluid; fill to between marks on reservoir.
- ☐ Do items in A, B and C.

| | |
|---|---|
| 93,750 mi/150,000 km/ — | ☐ Replace oil and filter. |
| 97,500 mi/156,000 km/ 6 1/2 years | ☐ Do items in A. |
| 101,250 mi/162,000 km/ — | ☐ Replace oil and filter. |

105,000 mi/168,000 km/ 7 years

- ☐ Check idle speed* (see page 11-100).: 800 ± 50 rpm
- ☐ Replace coolant (see page 10-8). Use Honda All Season Antifreeze/coolant Type 2.
  - Capacity: 6.5 ℓ (6.9 US qt, 5.7 Imp qt).
- ☐ Inspect valve clearance (cold) Intake: 0.21 – 0.25 mm (0.008 – 0.010 in.), Exhaust: 0.25 – 0.29 mm (0.010 – 0.011 in.) (see page 6-39).
- ☐ Replace spark plugs, Use NGK (PFR7G – 11) or DENSO (PK22PR – L11) Gap: 1.0 – 1.1 mm (0.039 – 0.043 in.) (see page 4-19).
- ☐ Do items in A and B.

| | |
|---|---|
| 108,750 mi/174,000 km/ — | ☐ Replace oil and filter. |
| 112,500 mi/180,000 km/ 7 1/2 years | ☐ Do items in A. |
| 116,250 mi/186,000 km/ — | ☐ Replace oil and filter. |
| 120,000 mi/192,000 km/ 8 years | ☐ Do items A, B, and C. |

Do the items in parts A, B, and C as required for mileage/time interval.

**A**

- ☐ Replace engine oil and filter (see page 8-6). — Capacity with filter change: 4.8 ℓ (5.1 US qt, 4.2 Imp qt)
- ☐ Inspect front and rear brakes, every 6 months if vehicle is driven less than 7,500 mile (12,000 km) per year (see page 19-12).
  - Check pads and discs for wear (thickness), damage, and cracks.
  - Check calipers for damage, leaks, and tightness of mount bolts.
- ☐ Check tire inflation and condition.
- ☐ Inspect tie-rod ends, steering gearbox, and boots (see page 17-5).
  - Check rack grease and steering linkage.
  - Check boots for damage and leaking grease.
  - Check fluid lines for damage and leaks.
- ☐ Inspect suspension components.
  - Check bolts for tightness.
  - Check condition of ball joint boots for deterioration and damage.
- ☐ Inspect driveshaft boots. Check boots for cracks and boot bands for tightness (see page 16-3).

**B**

- ☐ Replace air cleaner element (see page 11-123).
- ☐ Replace differential oil. 0.74 ℓ (0.78 US qt, 0.65 Imp qt). Use hypoid gear oil GL5 or GL6 (see page 15-6).
- ☐ Check parking brake adjustment. — Should be fully applied within 9 to 13 clicks.
- ☐ Lubricate locks, latches, and hinges with Honda white lithium grease.
- ☐ Inspect brake hoses and lines (including ABS). Check the master cylinder, proportioning control valve, and ABS modulator for damage and leakage (see page 19-26).
- ☐ Check fluid levels and condition of fluids; check for leaks. If necessary, add MTF (see page 13-3), or engine coolant, brake fluid, and windshield washer fluid.
- ☐ Inspect cooling system hoses and connections (see page 10-2).
  - Check for damage, leaks, and deterioration.
  - Check for proper fan operation.
- ☐ Inspect exhaust system.* Check catalytic converter heat shield, exhaust pipe, and muffler for damage, leaks, and tightness (see page 9-4).
- ☐ Inspect fuel lines and connections.* Check for loose connections, cracks and deterioration; retighten loose connections and replace damaged parts (see page 11-101).
- ☐ Check all lights. Check function of all interior and exterior lights, and the positions of the headlights (see page 22-72).
- ☐ Inspect the vehicle underbody. Check the paint for damage, scratches, stone chipping, and dents.

**C**

- ☐ Inspect drive belt. Look for cracks and damage.
  - Alternator compressor belt: Inspect auto tensioner indicator. Needs no adjustment.
- ☐ Replace air conditioning filter, every 15,000 miles if vehicle is driven mostly where air has high concentration of soot from industry and diesel-powered vehicles; also replace it anytime airflow is less than usual (see page 21-42).
- ☐ Replace transmission fluid. Use Honda MTF.
  - 1.48 ℓ (1.56 US qt, 1.30 Imp qt)

# Maintenance Schedule for Normal and Severe Conditions (2000 Model)

## Listed by Maintenance Item

Service at the indicated distance or time, whichever comes first.
- If driven in normal conditions, do items with a dot (●).
- If driven in severe conditions or normally driven in Canada, do the circle (○) and dot (●) items.

| Service at the indicated distance or time, whichever comes first. | miles x 1000 | 3.75 | 7.5 | 11.25 | 15 | 18.75 | 22.5 | 26.25 | 30 | 33.75 | 37.5 |
|---|---|---|---|---|---|---|---|---|---|---|---|
| | km x 1000 | 6 | 12 | 18 | 24 | 30 | 36 | 42 | 48 | 54 | 60 |
| | years | | 1/2 | | 1 | | 1 1/2 | - | 2 | -- | 2 1/2 |
| Replace engine oil | Normal Conditions: Every 7,500 miles (12,000 km) or 1 year<br>Severe Conditions: Every 3,750 miles (6,000 km) or 6 months | | | | | | | | | | |
| Replace engine oil filter | Normal Conditions: Every other oil change<br>Severe Conditions: Every oil change | | | | | | | | | | |
| Replace air cleaner element [NOTE 1] | | | | | ○ | | | | ● | | |
| Inspect valve clearance | Adjust only if noisy. | | | | | | | | | | |
| Replace spark plugs | | | | | | | | | | | |
| Inspect drive belt | | | | | | | | | ● | | |
| Inspect idle speed* | | | | | | | | | | | |
| Replace engine coolant | | | | | | | | | | | |
| Replace transmission fluid | | | | | | | | | ○ | | |
| Replace differential oil | | | | | ○ | | | | ● | | |
| Inspect front and rear brakes | | | ○ | | ● | | ○ | | ● | | ○ |
| Replace brake fluid | | | | | | | | | | | |
| Check parking brake adjustment | | | | | ● | | | | ● | | |
| Replace air conditioning filter [NOTE 2] | | | | | | | | | ● | | |
| Lubricate locks, hinges, and latches | | | | | ○ | | | | ○ | | |
| Check tire inflation and condition at least once a month | | | ● | | ● | | ● | | ● | | ● |
| Inspect tie-rod ends, steering gearbox, and boots | | | ○ | | ● | | ○ | | ● | | ○ |
| Inspect suspension components | | | ○ | | ● | | ○ | | ● | | ○ |
| Inspect driveshaft boots | | | ○ | | ● | | ○ | | ● | | ○ |
| Inspect brake hoses and lines (including ABS) | | | | | ● | | | | ● | | |
| Inspect all fluid levels and condition of fluid | | | | | ● | | | | ● | | |
| Inspect cooling system hoses and connection | | | | | ● | | | | ● | | |
| Inspect exhaust system* | | | | | ● | | | | ● | | |
| Inspect fuel lines and connections* | | | | | ● | | | | ● | | |
| Check lights and controls | | | | | ○ | | | | ○ | | |
| Inspect vehicle under body | | | | | ○ | | | | ○ | | |

NOTE:
1. If the vehicle is driven in dusty conditions, replace the air cleaner element every 15,000 miles (24,000 km), if not, replace it every 30,000 miles (48,000 km).
2. Replace the air conditioning filter every 15,000 miles (24,000km) if the vehicle is driven mostly where air has a high concentration of soot from industry and diesel-powered vehicles; also replace it anytime airflow is less than usual.

* According to state and federal regulations, failure to do the maintenance items marked with an asterisk (*) will not void customer's emissions warranties. However, Honda recommends that all maintenance services be done at the recommended interval to ensure long-term reliability.

| 41.25 | 45 | 48.75 | 52.5 | 56.25 | 60 | 63.75 | 67.5 | 71.25 | 75 | 78.75 | 82.5 | 86.25 | 90 | 93.75 | 97.5 | 101.25 | 105 | 108.75 | 112.5 | 116.25 | 120 |
|---|---|---|---|---|---|---|---|---|---|---|---|---|---|---|---|---|---|---|---|---|---|
| 66 | 72 | 78 | 84 | 90 | 96 | 102 | 108 | 114 | 120 | 126 | 132 | 138 | 144 | 150 | 156 | 162 | 168 | 175 | 181 | 187 | 192 |
| — | 3 | — | 3 1/2 | — | 4 | — | 4 1/2 | — | 5 | — | 5 1/2 | — | 6 | — | 6 1/2 | — | 7 | — | 7 1/2 | — | 8 |
| Normal Conditions: Every 7,500 miles (12,000 km) or 1 year<br>Severe Conditions: Every 3,750 miles (6,000 km) or 6 months | | | | | | | | | | | | | | | | | | | | | |
| Normal Conditions: Every other oil change<br>Severe Conditions: Every oil change | | | | | | | | | | | | | | | | | | | | | |
| | ○ | | | | ● | | | | ○ | | | | ● | | | | ○ | | | | ● |
| Adjust only if noisy. | | | | | | | | | | | | | | | | | ● | | | | |
| | | | | | | | | | | | | | | | | | ● | | | | |
| | | | | | ● | | | | | | | | ● | | | | | | | | ● |
| | | | | | | | | | | | | | | | | | ● | | | | |
| | ● | | | | | | | | ● | | | | | | | | ● | | | | |
| | | | | | ○ | | | | | | | | ● | | | | | | | | ○ |
| | ○ | | | | ● | | | | ○ | | | | ● | | | | ○ | | | | ● |
| | ● | | ○ | | ● | | ○ | | ● | | ○ | | ● | | ○ | | ● | | ○ | | ● |
| | ● | | | | | | | | | | | | ● | | | | | | | | |
| | ● | | | | ● | | | | ● | | | | ● | | | | ● | | | | ● |
| | | | | | ● | | | | | | | | ● | | | | | | | | ● |
| | ○ | | | | ○ | | | | ○ | | | | ○ | | | | ○ | | | | ○ |
| | ● | | ● | | ● | | ● | | ● | | ● | | ● | | ● | | ● | | ● | | ● |
| | ● | | ○ | | ● | | ○ | | ● | | ○ | | ● | | ○ | | ● | | ○ | | ● |
| | ● | | ○ | | ● | | ○ | | ● | | ○ | | ● | | ○ | | ● | | ○ | | ● |
| | ● | | ○ | | ● | | ○ | | ● | | ○ | | ● | | ○ | | ● | | ○ | | ● |
| | ● | | | | ● | | | | ● | | | | ● | | | | ● | | | | ● |
| | ● | | | | ● | | | | ● | | | | ● | | | | ● | | | | ● |
| | ● | | | | ● | | | | ● | | | | ● | | | | ● | | | | ● |
| | ● | | | | ● | | | | ● | | | | ● | | | | ● | | | | ● |
| | ○ | | | | ○ | | | | ○ | | | | ○ | | | | ○ | | | | ○ |
| | ○ | | | | ○ | | | | ○ | | | | ○ | | | | ○ | | | | ○ |

# Maintenance Schedule for Normal Conditions (2001-2003 Models)

## Listed by Distance/Time

Service at the indicated distance or time, whichever comes first. This two-page Maintenance Schedule outlines the minimum required maintenance. For Canada models, use the Maintenance Schedule for Severe conditions.
According to state and federal regulations, failure to do the maintenance items marked with asterisk ( * ) will not void customer's emissions warranties. However, Honda recommends that all maintenance services be done at the recommended interval to ensure long-term reliability.

| | |
|---|---|
| 7,500 mi/ 12,000 km/ — | ☐ Do items in A. |
| 15,000 mi/ 24,000 km/ 1 year | ☐ Do items in A and B. |
| 22,500 mi/ 36,000 km/— | ☐ Do items in A. |
| 30,000 mi/ 48,000 km/ 2 years | ☐ Do items in A, B, and C. |
| 37,500 mi/ 60,000 km/ — | ☐ Do items in A. |
| 45,000 mi/ 72,000 km/ 3 years | ☐ Do items in A and B. |
| — mi/ — km/ 3 years | ☐ Do items in D. |
| 52,500 mi/ 84,000 km/ — | ☐ Do items in A. |
| 60,000 mi/ 96,000 km/4 years | ☐ Do items in A, B, and C. |
| 67,500 mi/ 108,000 km/ — | ☐ Do items in A. |
| 75,000 mi/ 120,000 km/ 5 years | ☐ Do items in A and B. |
| 82,500 mi/ 132,000 km/— | ☐ Do items in A. |
| 90,000 mi/ 144,000 km/ 6 years | ☐ Do items in A, B, C, and D. |
| — mi/ — km/ 6 years | ☐ Do items in D. |
| 97,500 mi/ 156,000 km/ — | ☐ Do items in A. |
| 105,000 mi/168,000 km/ 7 years | |
| ☐ Check idle speed. Should be 800 ± 50 rpm in neutral (see page 11-100). | |
| ☐ Inspect valve clearance (cold) Intake: 0.21 – 0.25 mm (0.008 – 0.010 in.) Exhaust: 0.25 - 0.29 mm (0.010 – 0.011 in.) (see page 6-39). | |
| ☐ Replace spark plugs. Use NGK (PFR7G – 11) or DENSO (PK22PR – L11). Gap: 1.0 – 1.1 mm (0.039 – 0.043 in.) (see page 4-19). | |
| ☐ Do items in A and B. | |
| 112,500 mi/181,000 km/ — | ☐ Do items in A. |
| 120,000 mi/192,000 km/ 8 years | |
| ☐ Replace transmission fluid. 1.48 ℓ (1.56 US qt, 1.30 Imp qt). Use Honda MTF (see page 13-3). | |
| ☐ Do items in A, B and C. | |
| — mi/ — km/ 9 years | ☐ Do items in D. |
| 120,000 mi/192,000 km/10 years, then replace every 60,000 mi/96,000 km/5 years | |
| ☐ Replace engine coolant (see page 10-8). Capacity: 6.5 ℓ (6.9 US qt, 5.7 Imp qt). Use Honda All Season Antifreeze/coolant Type 2. | |

Do the items in parts A, B, C, and D as required for mileage/time interval listed.

**A**

- ☐ Replace engine oil (see page 8-5). —Capacity without filter change: 4.5 ℓ (4.8 US qt, 4.0 Imp qt), with filter change: 4.8 ℓ (5.1 US qt, 4.2 Imp qt)
- ☐ Check tire inflation and condition.

**B**

- ☐ Replace engine oil filter (see page 8-6).
- ☐ Inspect front and rear brakes (see page 19-12).
  - Check pads and discs for wear (thickness), damage, and cracks.
  - Check calipers for damage, leaks, and tightness of mount bolts.
- ☐ Check parking brake adjustment. It should be fully applied within 9 to 13 clicks.
- ☐ Inspect tie-rod ends, steering gearbox, and boots (see page 17-5).
  - Check rack grease and steering linkage.
  - Check boots for damage and leaking grease.
  - Check fluid line for damage and leaks.
- ☐ Inspect suspension components.
  - Check bolts for tightness.
  - Check condition of ball joint boots for deterioration and damage.
- ☐ Inspect driveshaft boots. Check boots for cracks and boot bands for tightness (see page 16-3).
- ☐ Inspect brake hoses and lines (including ABS). —Check the master cylinder, proportioning control valve, and ABS modulator for damage and leakage (see page 19-26).
- ☐ Check all fluid levels and condition of fluids; check for leaks. If necessary, add MTF (see page 13-3), engine coolant, brake fluid, and windshield washer fluid.
- ☐ inspect cooling system hoses and connections (see page 10-2).
  - Check for damage, leaks, and deterioration.
  - Check for proper fan operation.
- ☐ Inspect exhaust system*. Check catalytic converter heat shield, exhaust pipe, and muffler for damage, leaks, and tightness (see page 9-4).
- ☐ Inspect fuel lines and connections*. Check for loose connections, cracks and deterioration; retighten loose connections and replace damaged parts (see page 11-101).

**C**

- ☐ Replace air cleaner element.
- ☐ Inspect drive belt, for cracks and damage.
  - Alternator compressor belt : Inspect auto tensioner indicator, needs no adustment (see page 4-25).
- ☐ Replace differential oil. 0.74 ℓ (0.78 US qt, 0.65 Imp qt). Use hypoid gear oil GL5 or GL6 (see page 15-6).
- ☐ Replace the dust and pollen filter (see page 21-42).
  - Replace it twice as often (at 30,000 mile interval) if the vehicle is driven mostly in urban areas that have high concentrations of soot in the air from industry and diesel-powered vehicles.
  - Replace it whenever airflow from the climate control system is less than normal.

**D**

- ☐ Replace brake fluid every 3 years (independent of mileage).

# Maintenance Schedule for Severe Conditions (2001-2003 Models)

## Listed by Distance/Time

Service at the indicated distance or time, whichever comes first. Use this schedule if the vehicle is driven MAINLY in Canada or in any of the following conditions; if only OCCASIONALLY driven in these conditions, use the Normal Conditions schedule (see page 3-10).
According to state and federal regulations, failure to do the maintenance items marked with asterisk ( * ) will not void customer's emissions warranties. However, Honda recommends that all maintenance services be done at the recommended interval to ensure long-term reliability.

**Severe Driving Conditions**

- Less than 5 miles (8 km) per trip or, in freezing temperatures, less than 10 miles (16 km) per trip
- In extremely; hot weather (over 90°F/32°C)
- Extensive idling or long periods of stop-and-go driving, such as a taxi or a commercial delivery vehicle
- Trailer towing, driving in mountains
- On muddy, dusty, or de-iced roads

| | |
|---|---|
| 3,750 mi/ 6,000 km/ 6 months | ☐ Do items in A. |
| 7,500 mi/ 12,000 km/ — | ☐ Do items in A and B. |
| 11,250 mi/ 18,000 km/ — | ☐ Do items in A. |
| 15,000 mi/ 24,000 km/ 1 year | ☐ Do items in A, B, and C. |
| 18,750 mi/ 30,000 km/ — | ☐ Do items in A. |
| 22,500 mi/ 36,000 km/ 1 1/2 years | ☐ Do items in A and B. |
| 26,250 mi/ 42,000 km/ — | ☐ Do items in A. |
| 30,000 mi/ 48,000 km/ 2 years | ☐ Do items in A, B, C, and D. |
| 33,750 mi/ 54,000 km/ — | ☐ Do items in A. |
| 37,500 mi/ 60,000 km/ 2 1/2 years | ☐ Do items in A and B. |
| 41,250 mi/ 66,000 km/ — | ☐ Do items in A. |
| 45,000 mi/ 72,000 km/ 3 years | ☐ Do items in A, B, and C. |
| — mi/ — km/ 3 years | ☐ Do items in E. |
| 48,750 mi/ 78,000 km/ — | ☐ Do items in A. |
| 52,500 mi/ 84,000 km/ 3 1/2 years | ☐ Do items in A and B. |
| 56,250 mi/ 90,000 km/ — | ☐ Do items in A. |
| 60,000 mi/ 96,000 km/ 4 years | |
| ☐ Replace transmission fluid. 1.48 ℓ (1.56 US qt, 1.30 Imp qt). Use Honda MTF (see page 13-3). | |
| ☐ Do items in A, B, C and D. | |
| 63,750 mi/102,000 km/ — | ☐ Do items in A. |
| 67,500 mi/108,000 km/ 4 1/2 years | ☐ Do items in A and B. |
| 71,250 mi/114,000 km / — | ☐ Do items in A. |
| 75,000mi/120,000 km/ 5 years | ☐ Do items in A, B and C. |
| 78,750 mi/126,000 km/ — | ☐ Do items in A. |
| 82,500 mi/132,000 km/ 5 1/2 years | ☐ Do items in A and B. |
| 86,250 mi/138,000 km/ — | ☐ Do items in A. |
| 90,000 mi/144,000 km/ 6 years | ☐ Do items in A, B, C, and D. |
| — mi/ — km/ 6 years | ☐ Do items in E. |
| 93,750 mi/150,000 km/ — | ☐ Do items in A. |
| 97,500 mi/156,000 km/ 6 1/2 years | ☐ Do items in A and B. |
| 101,250 mi/162,000 km/ — | ☐ Do items in A. |
| 105,000 mi/168,000 km/ 7 years | |
| ☐ Check idle speed* (see page 11-100).: 800 ± 50 rpm | |
| ☐ Inspect valve clearance (cold) Intake: 0.21 – 0.25 mm (0.008 – 0.010 in.), Exhaust: 0.25 – 0.29 mm (0.010 – 0.011 in.) (see page 6-39). | |
| ☐ Replace spark plugs. Use NGK (PFR7G – 11) or DENSO (PK22PR – L11) Gap: 1.0 – 1.1 mm (0.039 – 0.043 in.) (see page 4-19). | |
| ☐ Do items in A, B and C. | |
| 108,750 mi/174,000 km/ — | ☐ Do items in A. |
| 112,500 mi/180,000 km/ 7 1/2 years | ☐ Do items in A and B. |
| 116,250 mi/186,000 km/ — | ☐ Do items in A. |
| 120,000 mi/192,000 km/ 8 years | |
| ☐ Replace transmission fluid. 1.48 ℓ (1.56 US qt, 1.30 Imp qt). Use Honda MTF (see page 13-3). | |
| ☐ Do items in A, B, C and D. | |
| — mi/ — km/ 9 years | ☐ Do items in E. |
| 120,000 mi/192,000 km/ 10 years, then every 60,000 mi/ 96,000 km/ 5 years | |
| ☐ Replace engine coolant (see page 10-8). Capacity: 6.5 ℓ (6.9 US qt, 5.7 Imp qt). Use Honda All Season Antifreeze/coolant Type 2. | |

Do the items in parts A, B, C, D, and E as required for mileage/time interval.

**A**

- ☐ Replace engine oil and filter (see page 8-6). — Capacity with filter change: 4.8 ℓ (5.1 US qt, 4.2 Imp qt)

**B**

- ☐ Inspect front and rear brakes, every 6 months if vehicle is driven less than 7,500 mile per year (see page 19-12).
  - Check pads and discs for wear (thickness), damage, and cracks.
  - Check calipers for damage, leaks, and tightness of mount bolts.
- ☐ Check tire inflation and condition.
- ☐ Inspect tie-rod ends, steering gearbox, and boots (see page 17-5).
  - Check rack grease and steering linkage.
  - Check boots for damage and leaking grease.
  - Check fluid lines for damage and leaks.
- ☐ Inspect suspension components.
  - Check bolts for tightness.
  - Check condition of ball joint boots for deterioration and damage.
- ☐ Inspect driveshaft boots. Check boots for cracks and boot bands for tightness (see page 16-3).

**C**

- ☐ Replace air cleaner element (see page 11-123).
- ☐ Replace differential fluid. 0.74 ℓ (0.78 US qt, 0.65 Imp qt). Use hypoid gear oil GL5 or GL6 (see page 15-6).
- ☐ Check parking brake adjustment. — It should be fully applied within 9 to 13 clicks.
- ☐ Lubricate all hinges, locks and latches with Honda white lithium grease.
- ☐ Inspect brake hoses and lines (including ABS). Check the master cylinder, proportioning control valve, and ABS modulator for damage and leakage (see page 19-26).
- ☐ Check fluid levels and condition of fluids; check for leaks. If necessary, add MTF (see page 13-3), or engine coolant, brake fluid, and windshield washer fluid.
- ☐ Inspect cooling system hoses and connections (see page 10-2).
  - Check for damage, leaks, and deterioration.
  - Check for proper fan operation.
- ☐ Inspect exhaust system.* Check catalytic converter heat shield, exhaust pipe, and muffler for damage, leaks, and tightness (see page 9-4).
- ☐ Inspect fuel lines and connections.* Check for loose connections, cracks and deterioration; retighten loose connections and replace damaged parts (see page 11-101).
- ☐ Check all lights. Check function of all interior and exterior lights, and the positions of the headlights (see page 22-72).
- ☐ Inspect the vehicle underbody. Check the paint for damage, scratches, stone chipping, and dents.

**D**

- ☐ Inspect drive belt. Look for cracks and damage.
  - Alternator compressor belt: Inspect auto tensioner indicator. Needs no adjustment.
- ☐ Replace air conditioning filter, every 15,000 miles (24,000 km) if vehicle is driven mostly where air has high concentration of soot from industry and diesel-powered vehicles; also replace it anytime airflow is less than usual (see page 21-42).

**E**

- ☐ Replace brake fluid every 3 years (independent of mileage).

# Maintenance Schedule for Normal and Severe Conditions (2001-2003 Models)

## Listed by Maintenance Item

Service at the indicated distance or time, whichever comes first.
- If driven in normal conditions, do items with a dot (●).
- If driven in severe conditions or normally driven in Canada, do the circle (○) and dot (●) items.

| Service at the indicated distance or time, whichever comes first. | | | | | | | | | | | |
|---|---|---|---|---|---|---|---|---|---|---|---|
| | miles x 1000 | 3.75 | 7.5 | 11.25 | 15 | 18.75 | 22.5 | 26.25 | 30 | 33.75 | 37.5 |
| | km x 1000 | 6 | 12 | 18 | 24 | 30 | 36 | 42 | 48 | 54 | 60 |
| | years | — | 1/2 | — | 1 | — | 1 1/2 | — | 2 | — | 2 1/2 |
| Replace engine oil | | Normal Conditions: Every 7,500 miles (12,000 km) or 1 year<br>Severe Conditions: Every 3,750 miles (6,000 km) or 6 months | | | | | | | | | |
| Replace engine oil filter | | Normal Conditions: Every 15,000 miles (24,000 km) or 1 year<br>Severe Conditions: Every oil change | | | | | | | | | |
| Replace air cleaner element [NOTE 1] | | | | | ○ | | | | ● | | |
| Inspect valve clearance | | Adjust only if noisy. | | | | | | | | | |
| Replace spark plugs | | | | | | | | | | | |
| Inspect drive belt | | | | | | | | | ● | | |
| Inspect idle speed* | | | | | | | | | | | |
| Replace engine coolant | | At 120,000 miles (192,000 km) or 10 years, then every 60,000 miles (96,000 km) or 5 years. | | | | | | | | | |
| Replace transmission fluid | | | | | | | | | | | |
| Replace differential fluid | | | | | ○ | | | | ● | | |
| Inspect front and rear brakes | | | ○ | | ● | | ○ | | ● | | ○ |
| Replace brake fluid | | Every 3 years. | | | | | | | | | |
| Check parking brake adjustment | | | | | ● | | | | ● | | |
| Replace dust and pollen filter [NOTE 2] | | | | | | | | | ● | | |
| Lubricate locks, hinges, and latches | | | | | ○ | | | | ○ | | |
| Check tire inflation and condition at least once a month | | Every 7,500 miles (12,000 km) | | | | | | | | | |
| Inspect tie-rod ends, steering gearbox, and boots | | | ○ | | ● | | ○ | | ● | | ○ |
| Inspect suspension components | | | ○ | | ● | | ○ | | ● | | ○ |
| Inspect driveshaft boots | | | ○ | | ● | | ○ | | ● | | ○ |
| Inspect brake hoses and lines (including ABS) | | | | | ● | | | | ● | | |
| Inspect all fluid levels and condition of fluid | | | | | ● | | | | ● | | |
| Inspect cooling system hoses and connection | | | | | ● | | | | ● | | |
| Inspect exhaust system* | | | | | ● | | | | ● | | |
| Inspect fuel lines and connections* | | | | | ● | | | | ● | | |
| Check lights and controls | | | | | ○ | | | | ○ | | |
| Inspect vehicle underbody | | | | | ○ | | | | ○ | | |

* According to state and federal regulations, failure to do the maintenance items marked with an asterisk (*) will not void customer's emissions warranties. However, Honda recommends that all maintenance services be done at the recommended interval to ensure long-term reliability.

NOTE:
1. If the vehicle is driven in dusty conditions, replace the air cleaner element every 15,000 miles (24,000 km), if not, replace it every 30,000 miles (48,000 km).
2. Replace the dust and pollen filter every 15,000 miles (24,000km) if the vehicle is driven mostly where air has a high concentration of soot from industry and diesel-powered vehicles; also replace it anytime airflow is less than usual.

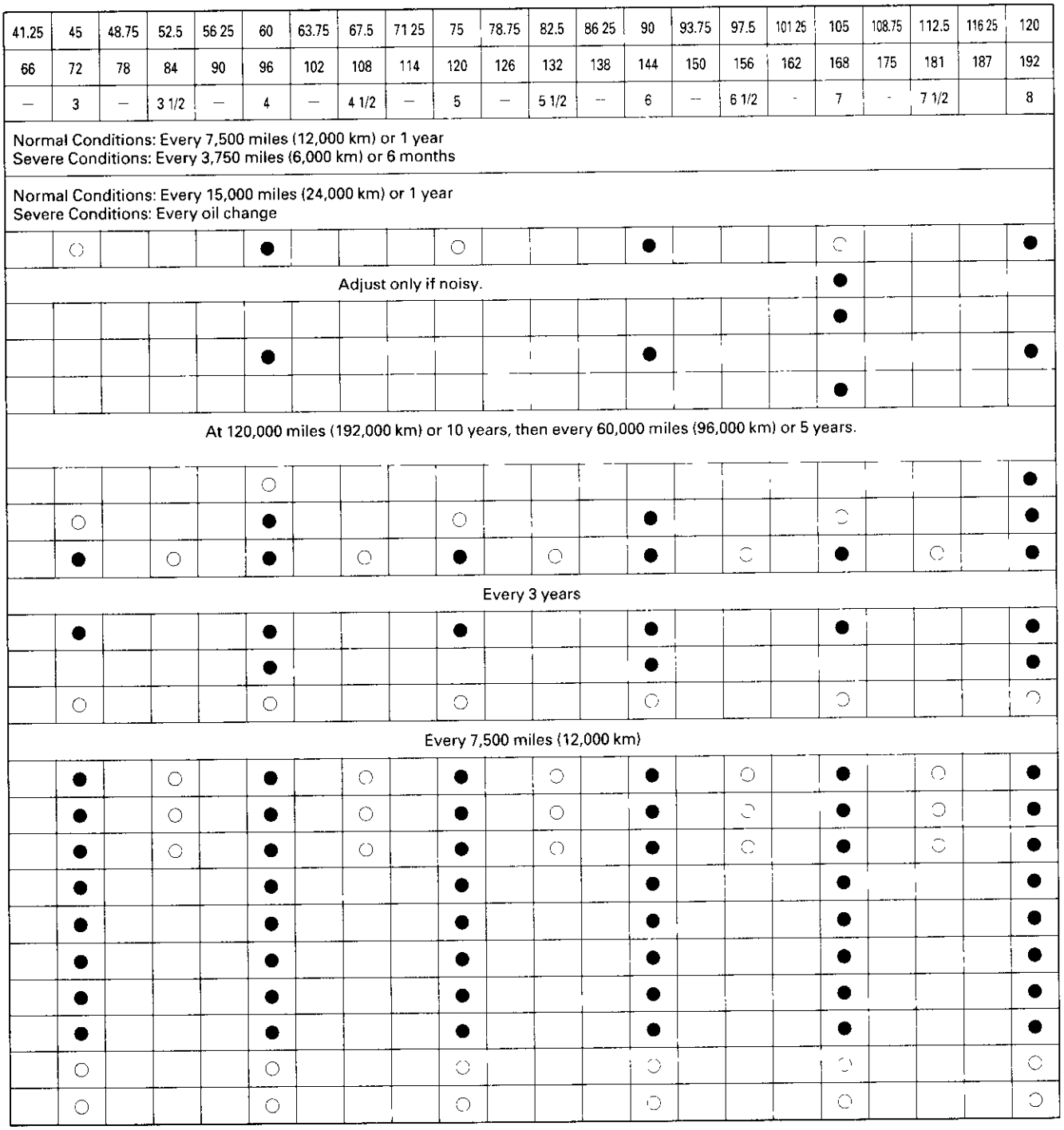
41.25 45 48.75 52.5 56 25 60 63.75 67.5 71 25 75 78.75 82.5 86 25 90 93.75 97.5 101 25 105 108.75 112.5 116 25 120
66 72 78 84 90 96 102 108 114 120 126 132 138 144 150 156 162 168 175 181 187 192
— 3 — 3 1/2 — 4 — 4 1/2 — 5 — 5 1/2 — 6 — 6 1/2 - 7 - 7 1/2 8
Normal Conditions: Every 7,500 miles (12,000 km) or 1 year
Severe Conditions: Every 3,750 miles (6,000 km) or 6 months
Normal Conditions: Every 15,000 miles (24,000 km) or 1 year
Severe Conditions: Every oil change
Adjust only if noisy.
At 120,000 miles (192,000 km) or 10 years, then every 60,000 miles (96,000 km) or 5 years.
Every 3 years
Every 7,500 miles (12,000 km)

# Engine Electrical


## Engine Electrical
Special Tools ..... 4-2

## Starting System
Component Location Index ..... 4-3
Circuit Diagram ..... 4-4
Starter Circuit Troubleshooting ..... 4-5
Clutch Interlock Switch Test ..... 4-6
Starter Solenoid Test ..... 4-7
Starter Performance Test ..... 4-7
Starter Replacement ..... 4-8
Starter Overhaul ..... 4-10

## Ignition System
Component Location Index ..... 4-16
Circuit Diagram ..... 4-17
Ignition Timing Inspection ..... 4-18
Spark Plug Inspection ..... 4-19

## Charging System
Component Location Index ..... 4-20
Circuit Diagram ..... 4-21
Charging Circuit Troubleshooting ..... 4-22
Alternator-compressor Belt
Inspection and Replacement ..... 4-25
Alternator Replacement ..... 4-26
Auto-tensioner Inspection/Replacement ..... 4-27
Alternator Overhaul ..... 4-29

## Cruise Control
Component Location Index ..... 4-35
Circuit Diagram ..... 4-36
Symptom Troubleshooting Index ..... 4-37
Cruise Control Unit Input Test ..... 4-38
Main Switch Test ..... 4-40
Main Switch/Indicator/Illumination Test ..... 4-41
Main Switch/Indicator Bulb Replacement ..... 4-41
Set/Resume Switch Test ..... 4-42
Set/Resume Switch Replacement ..... 4-42
Cruise Control Actuator Test ..... 4-43
Cruise Control Actuator Replacement ..... 4-44
Actuator Cable Replacement ..... 4-45
Actuator Cable Adjustment ..... 4-46
Clutch Pedal Position Switch Test ..... 4-47
Brake Pedal Position Switch Test ..... 4-47

## Special Tools

| Number | Tool Number | Description | Qty |
|---|---|---|---|
| ① | 07746-0010400 | Attachment, 52 x 55 mm | 1 |
| ② | 07749-0010000 | Driver | 1 |



①

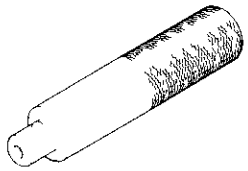

②

# Starting System

## Component Location Index

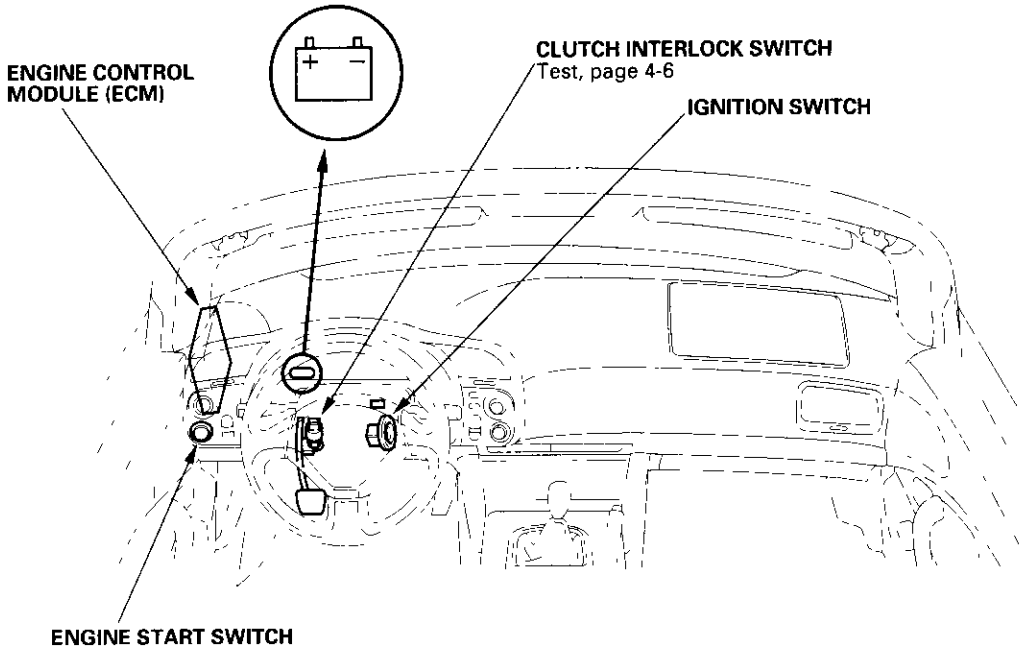


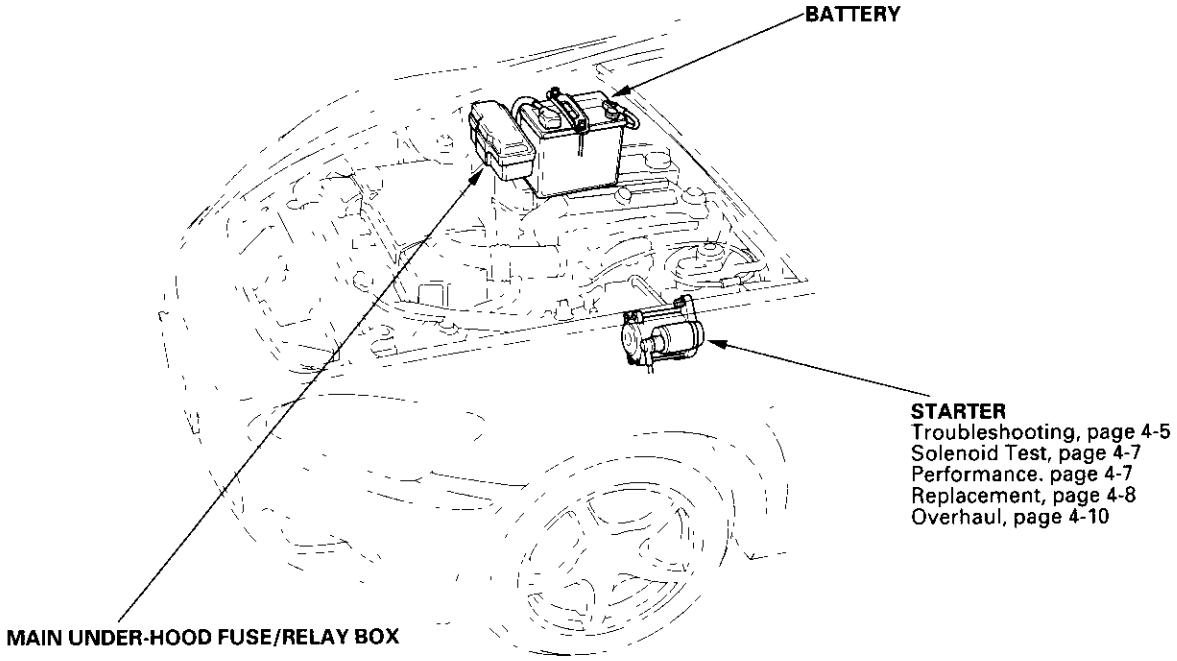

## Circuit Diagram

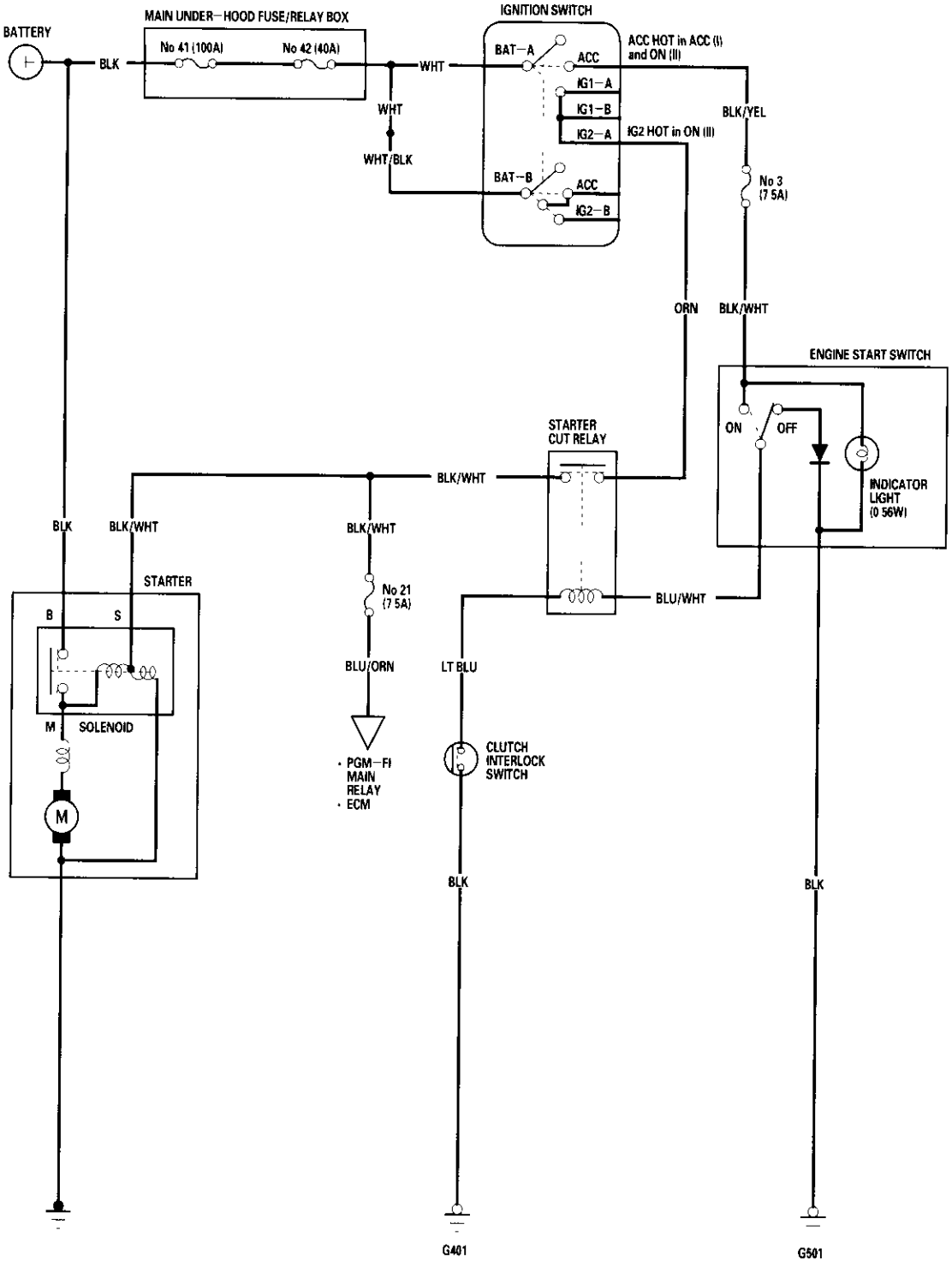

## Starter Circuit Troubleshooting

NOTE:
- Air temperature must be between 59° and 100°F (15° and 38°C) during this procedure.
- After this test, or any subsequent repair, reset the engine control module (ECM) to clear any diagnostic trouble codes (DTCs) (see page 11-3).
- The battery must be in good condition and fully charged.

**Recommended Procedure:**
- Use a starter system tester.
- Connect and operate the equipment in accordance with the manufacturer's instructions.

**Alternate Procedure**

1. Hook up the following equipment:
   - Ammeter, 0—400 A
   - Voltmeter, 0—20 V (accurate within 0.1 volt)
   - Tachometer, 0—1200 rpm

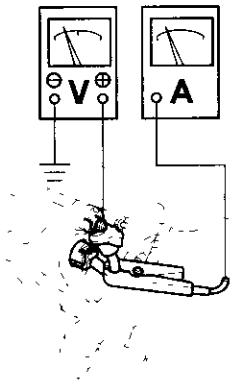


2. Remove the No.2 (15 A) fuse from the under-dash fuse/relay box.

3. Turn the ignition switch ON (II) with the clutch pedal depressed, and push the engine start switch.

   *Did the starter crank the engine normally?*

   **YES** The starting system is OK.■

   **NO**—Go to step 4.

4. Check the battery condition. Check electrical connections at the battery, the negative battery cable to body, engine ground cables, and the starter for looseness and corrosion. Then try starting the engine again.

   *Did the starter crank the engine?*

   **YES**—Repairing the loose connection fixed the problem. The starting system now is OK.■

   **NO**—If the starter will not crank the engine at all, go to step 5. If it cranks the engine erratically or too slowly, go to step 7. If it won't disengage from the flywheel ring gear when you release the switch, check for the following until you find the cause.

   - Solenoid plunger and switch malfunction
   - Dirty drive gear or damaged overrunning clutch

5. Make sure the transmission is in neutral, then disconnect the BLK/WHT wire (A) from the starter solenoid (B). Connect a jumper wire from the battery positive terminal to the solenoid terminal.

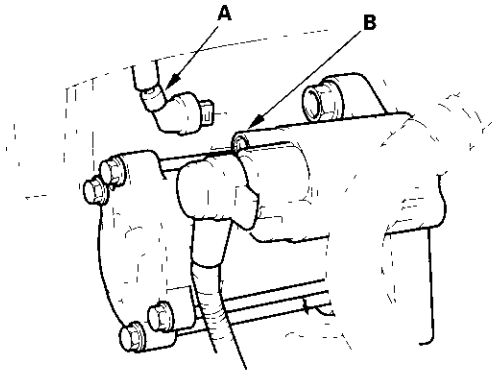


   *Did the starter crank the engine?*

   **YES**—Go to step 6.

   **NO**—Remove the starter and repair or replace as necessary.

(cont'd)

## Starter Circuit Troubleshooting (cont'd)

6. Check the following wires in the order listed until you find the open circuit.

   - Between the ignition switch and the starter cut relay.
   - Between the ignition switch and the start switch.
   - Between the start switch and the starter cut relay.
   - Between the start switch and body ground.
   - Between the starter cut relay and the starter.
   - Check the ignition switch, the start switch, the clutch interlock switch, and those connectors.
   - Substitute a known-good starter cut relay.

7. Check the cranking voltage and current draw.

   *Is cranking voltage greater than or equal to 8.5 volts and current draw less than or equal to 380 amps?*

   **YES** – Go to step 8.

   **NO** – Remove and disassemble the starter, and check for the following until you find the cause.

   - Open circuit in starter armature commutator segments
   - Starter armature dragging
   - Shorted armature winding
   - Excessive drag in engine

8. Check engine speed during cranking.

   *Is engine speed above 100 rpm?*

   **YES** – Go to step 9.

   **NO** – Remove and disassemble the starter, and check for the following until you find the cause.

   - Excessively worn starter brushes
   - Open circuit in commutator brushes
   - Dirty or damaged helical spline or drive gear
   - Faulty drive gear clutch

9. Remove the starter and inspect its drive gear and the flywheel ring gear for damage. Replace any damaged parts. ■

## Clutch Interlock Switch Test

1. Disconnect the connector from the clutch interlock switch, then remove the clutch interlock switch.

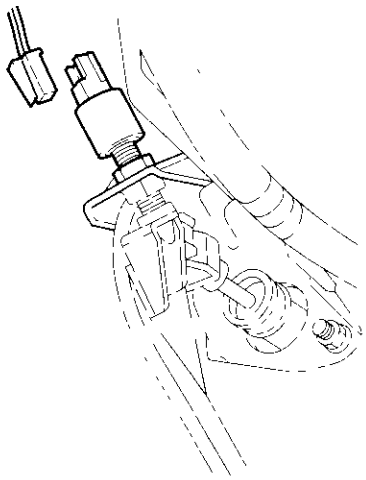

2. Check the clutch interlock switch connector terminals for continuity. There should be no continuity between the terminals with the button (A) released, and there should be continuity with the button pressed.

**CLUTCH INTER LOCK SWITCH CONNECTOR**

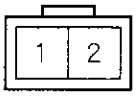


Terminal side of male terminals

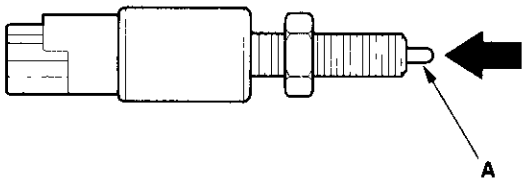


3. If the clutch interlock switch is faulty, replace it.

4. Install the clutch interlock switch, and adjust it (see page 12-4).

## Starter Solenoid Test

1. Check the hold-in coil for continuity between the S terminal and the armature housing (ground). There should be continuity.

   • If there is continuity, go to step 2.
   • If there is no continuity, replace the solenoid.

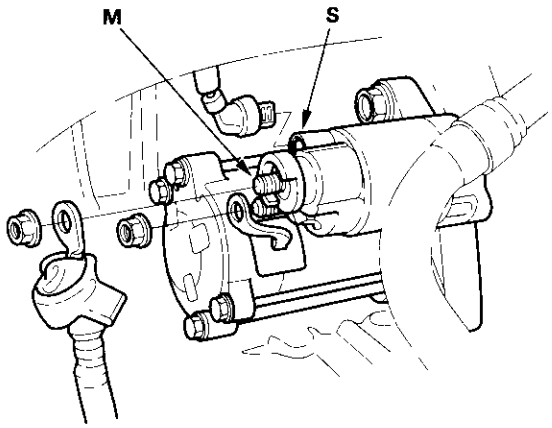


2. Check the pull-in coil for continuity between the S terminal and M terminal. There should be continuity.

   • If there is continuity, the solenoid is OK.
   • If there is no continuity, replace the solenoid.

## Starter Performance Test

1. Disconnect the wires from the S terminal and the M terminal.

2. Make the connections as described below using as heavy a wire as possible (preferably equivalent to the wire used for the vehicle). To avoid damaginig the starter, never leave the battery connected for more than 10 seconds.

3. Connect the battery as shown. Be sure to disconnect the starter motor wire from the solenoid. If the starter pinion pops out, it is working properly.

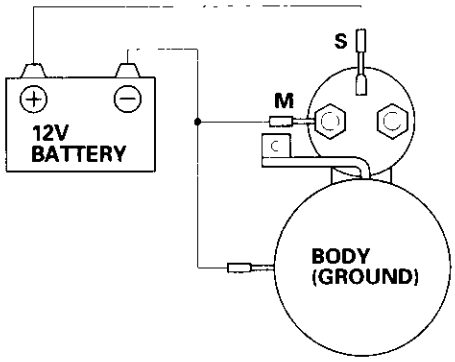


4. Disconnect the battery from the M terminal. If the pinion does not retract, the hold-in coil of the solenoid is working properly.

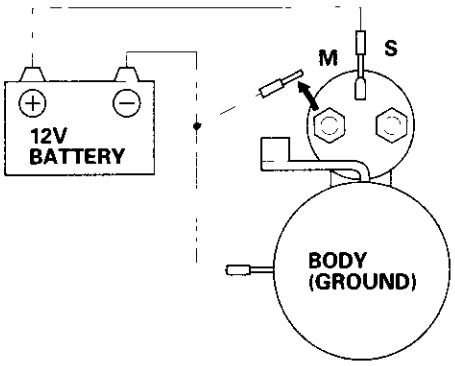


(cont'd)

## Starter Performance Test (cont'd)

5. Disconnect the battery from the starter body. If the pinion retracts immediately, it is working properly.

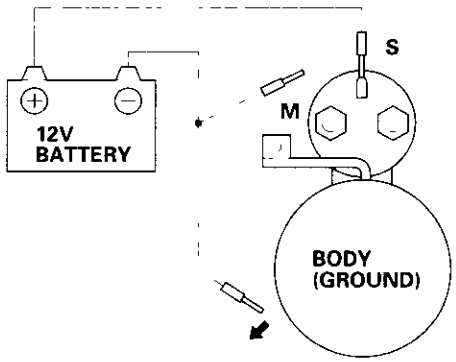


6. Clamp the starter firmly in a vise.

7. Connect the starter to the battery as described in the diagram below, and confirm that the motor starts and keeps rotating.

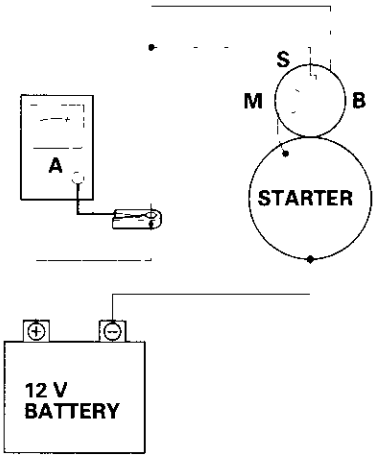


8. If the electric current and motor speed meet the specifications when the battery voltage is at 11.5 V, the starter is working properly.

**Specifications:**

| | |
|---|---|
| 1.0 kw | **90 A or less (Electric current), 3,000 rpm or more (Motor-speed)** |

## Starter Replacement

1. Make sure you have the anti-theft code for the radio, then write down the frequencies for the radio's preset buttons.

2. Disconnect the negative cable from the battery, then disconnect the positive cable.

3. Move the auto-tensioner (A) to relieve tension from the alternator-compressor belt, and remove the belt (B).

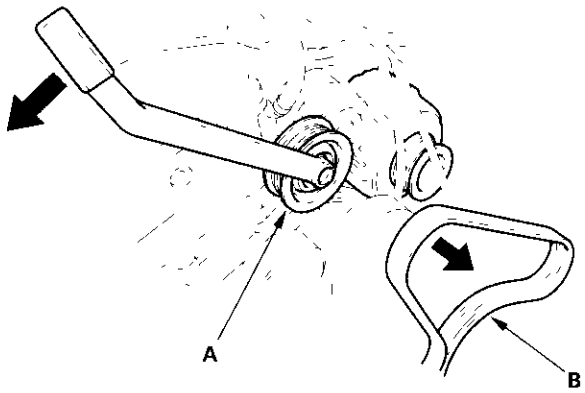


4. Remove the auto-tensioner.

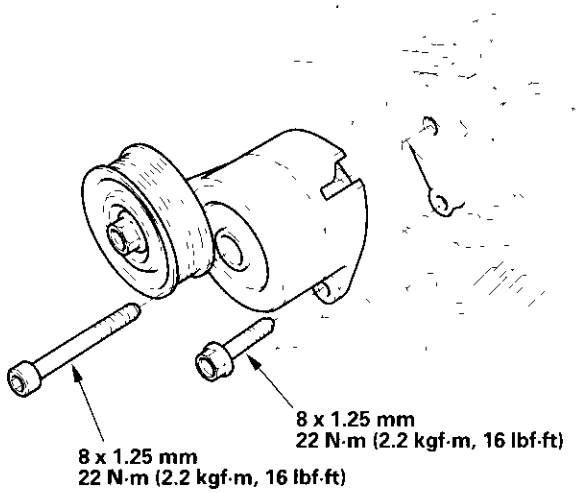

5. Disconnect the 4P connector (A) from the alternator (B), and disconnect the BLK wire from the alternator B terminal (C).

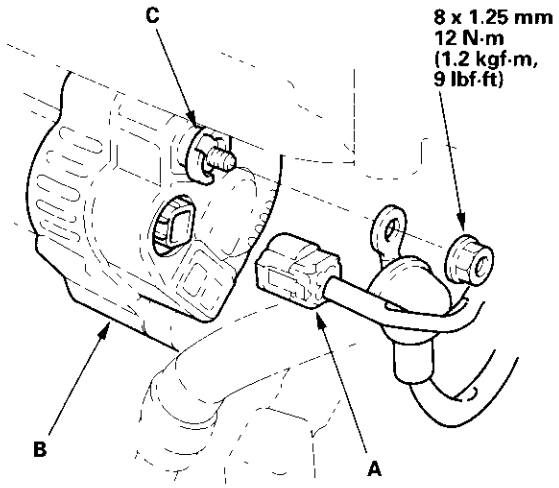


6. Remove the mounting bolts, then remove the alternator.

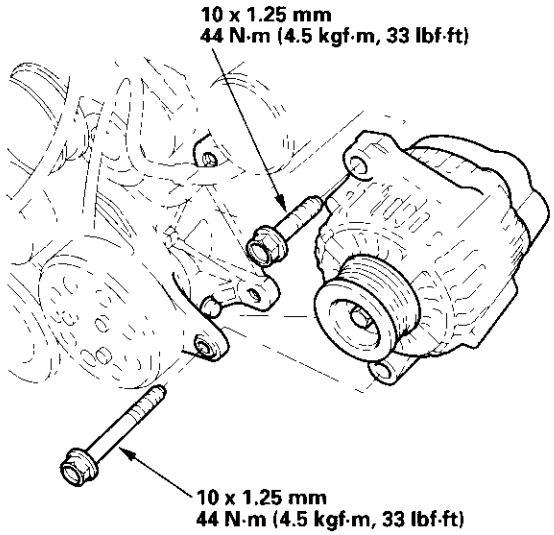


7. Disconnect the starter cable from the B terminal on the starter solenoid (A), then disconnect the BLK/WHT wire from the S terminal (C).

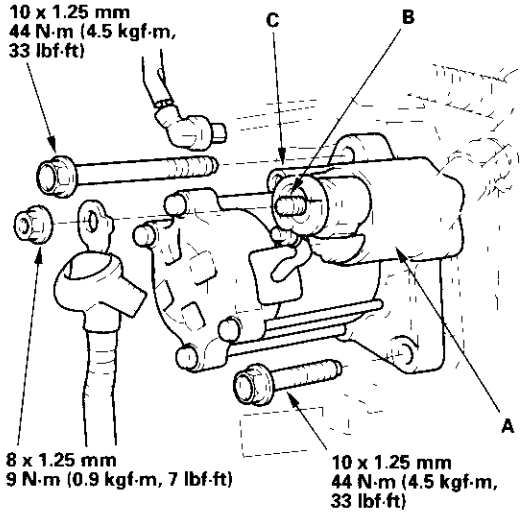


8. Remove the two bolts securing the starter, then remove the starter.

9. Install in the reverse order of removal. Make sure the crimped side of the ring terminal is facing out.

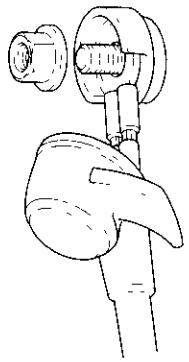

10. Connect the positive cable and negative cable to the battery.

11. Start the engine to make sure the starter operates properly.

12. Enter the anti-theft code for the radio, then enter the customer's radio station presets.

13. Set the clock.

14. Preform the engine sontrol module (ECM) idle learn procedure (see page 11-100).

## Starter Overhaul

### Disassembly/Reassembly

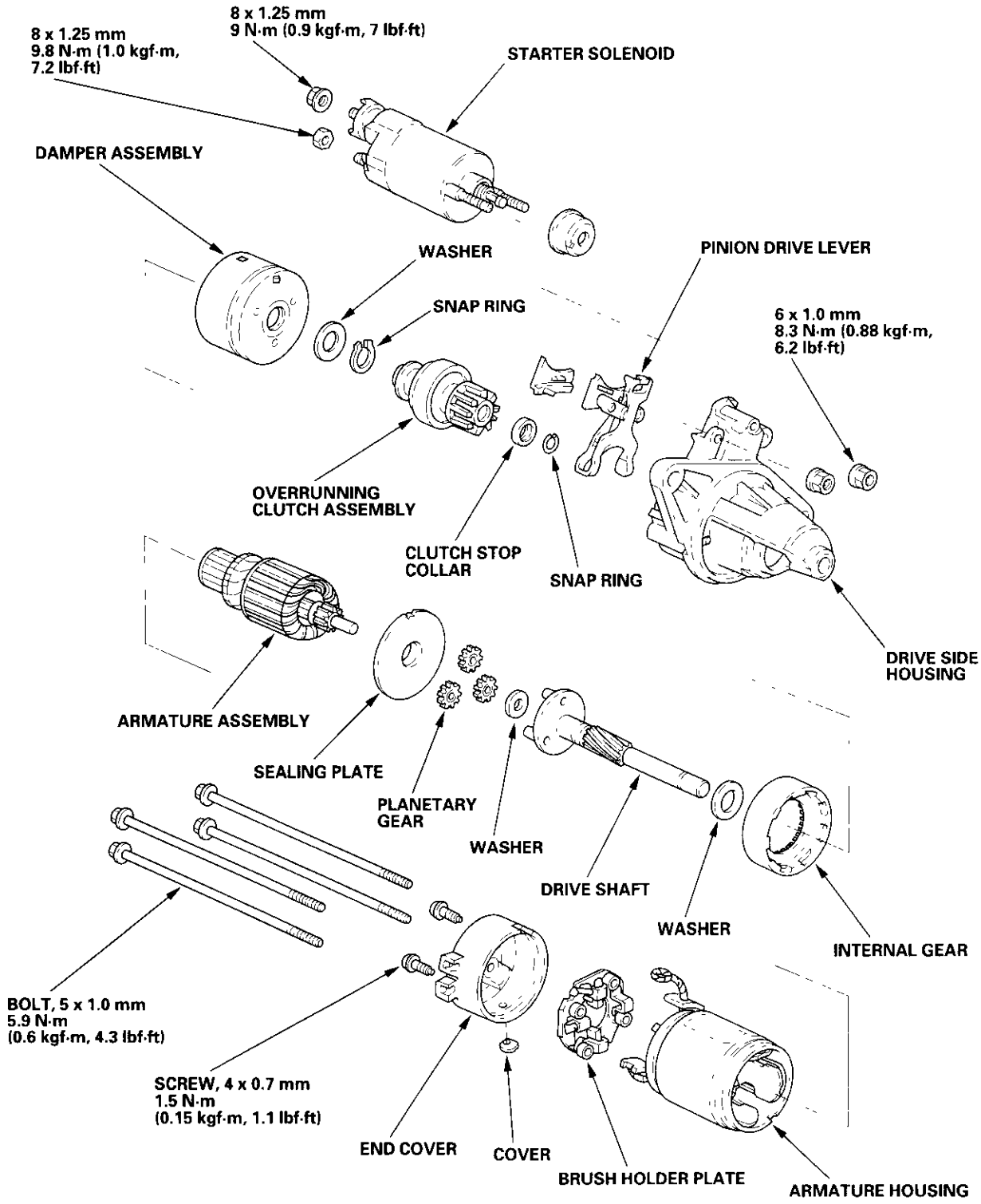

1. Remove the starter (see page 4-8).

2. Disassemble the starter.

**Armature Inspection and Test**

3. Inspect the armature for wear or damage due to contact with the permanent magnet. If there is wear or damage, replace the armature.

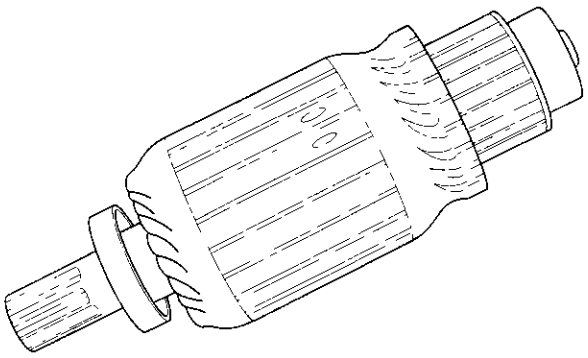

4. Check the commutator (A) surface. If the surface is dirty or burnt, resurface it with emery cloth or a lathe within the following specifications, or recondition with # 500 or # 600 sandpaper (B).

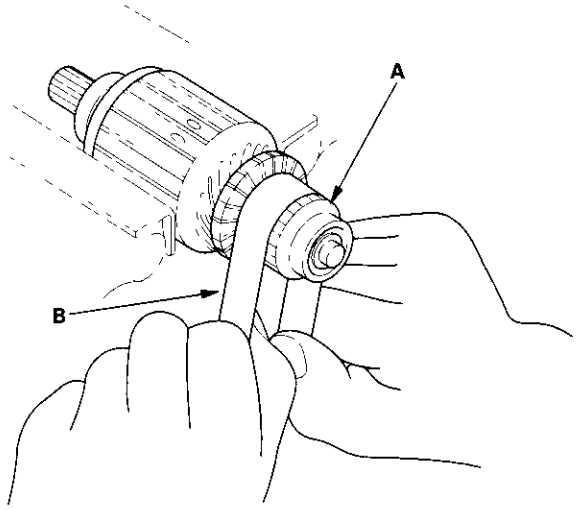


5. Check the commutator diameter. If the diameter is below the service limit, replace the armature.

**Commutator Diameter**
**Standard (New): 28.0—28.1 mm (1.102—1.106 in.)**
**Service Limit: 27.5 mm (1.083 in.)**

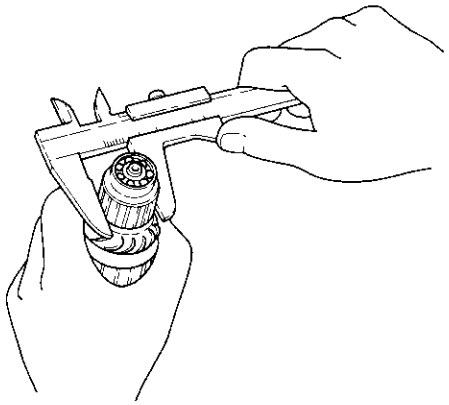

6. Measure the commutator runout.

- If the commutator runout is within the service limit, check the commutator for carbon dust or brass chips between the segments.
- If the commutator runout is not within the service limit, replace the armature.

**Commutator Runout**
**Standard (New): 0.02 mm (0.001 in.) max.**
**Service Limit: 0.05 mm (0.002 in.)**

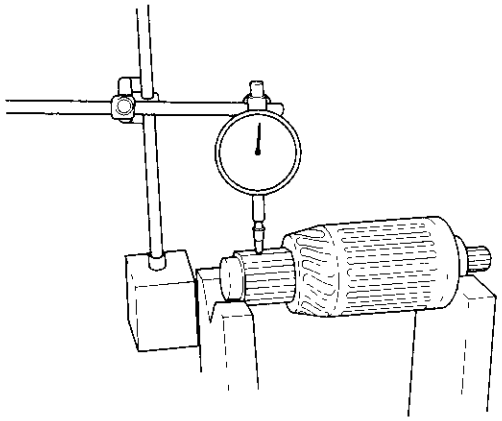

(cont'd)

## Starter Overhaul (cont'd)

7. Check the mica depth (A). If the mica is too high (B), undercut the mica with a hacksaw blade to the proper depth. Cut away all the mica (C) between the commutator segments. The undercut should not be too shallow, too narrow, or V-shaped (D).

**Commutator Mica Depth**
**Standard (New): 0.4—0.5 mm (0.016—0.020 in.)**
**Service Limit: 0.15 mm (0.006 in.)**

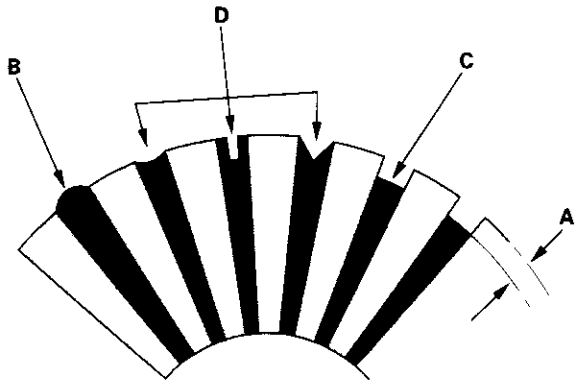


8. Check for continuity between the segments of the commutator. If an open circuit exists between any segments, replace the armature.

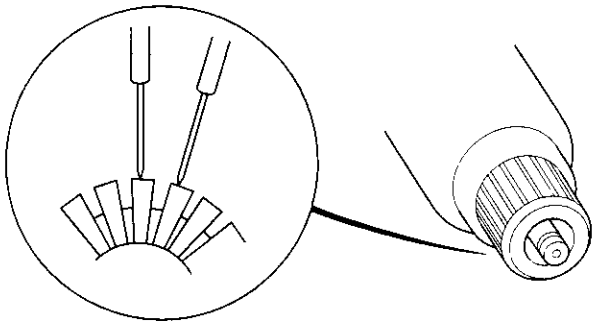

9. Place the armature (A) on an armature tester (B). Hold a hacksaw blade (C) on the armature core. If the blade is attracted to the core or vibrates while the core is turned, the armature is shorted. Replace the armature.

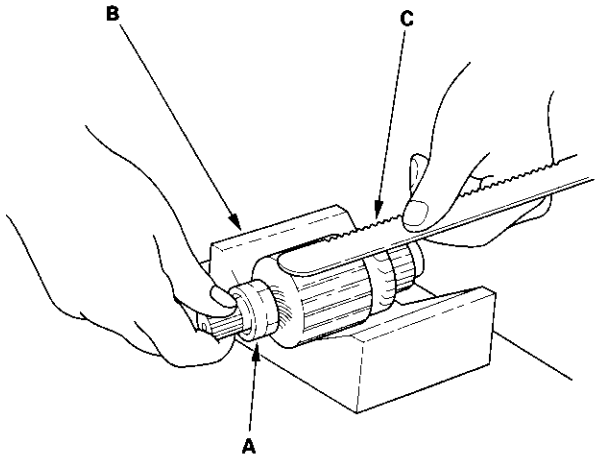


10. Check with an ohmmeter that no continuity exists between the commutator (A) and armature coil core (B), and between the commutator and armature shaft (C). If continuity exists, replace the armature.

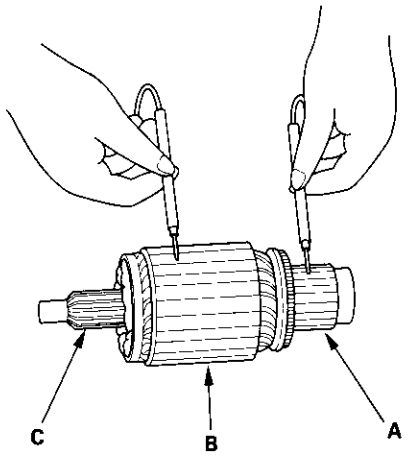

### Starter Brush Inspection

11. Measure the brush length. If it is not within the service limit, replace the brush holder assembly.

**Brush Length**
**Standard (New): 15.8 – 16.2 mm (0.62 – 0.64 in.)**
**Service Limit: 11.0 mm (0.43 in.)**

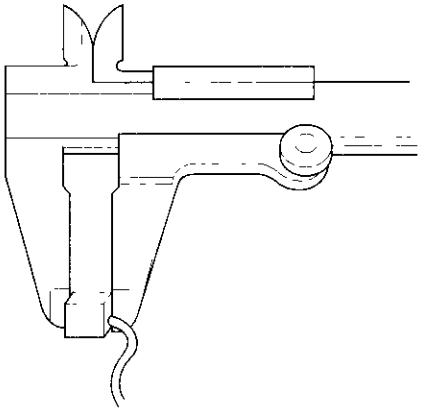

### Starter Field Winding Test

12. Check for continuity between the brushes (A). If there is no continuity, replace the armature housing (B).

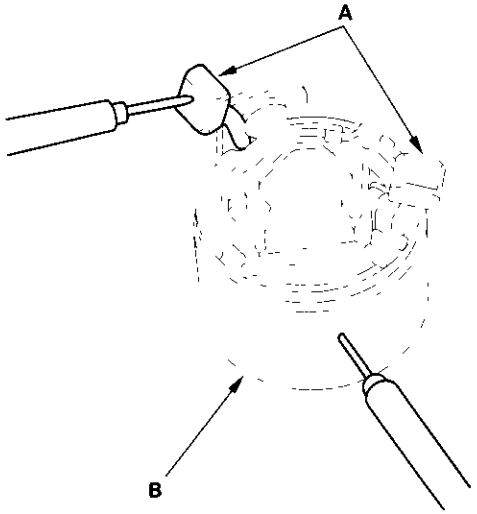


13. Check for continuity between each brush (A) and the armature housing (B). If there is continuity, replace the armature housing.

### Starter Brush Holder Test

14. Check that there is no continuity between the (+) brush holder (A) and (–) brush holder (B). If there is continuity, replace the brush holder assembly.

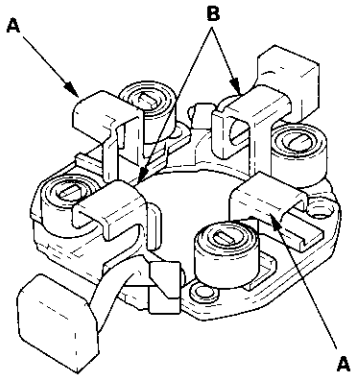


15. Insert the brush (A) into the brush holder, and bring the brush into contact with the commutator, then attach a spring scale (B) to the spring (C). Measure the spring tension at the moment the spring lifts off the brush.

**Spring Tension:**
**15.7 – 17.7 N (1.6 – 1.8 kgf, 3.53 – 3.97 lbf)**

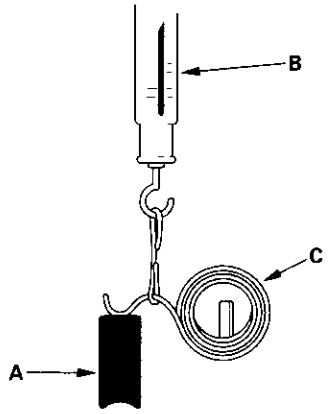


(cont'd)

## Starter Overhaul (cont'd)

16. Pry back each brush spring with a screwdriver, then position the brush about halfway out of its holder, and release the spring to hold it there.

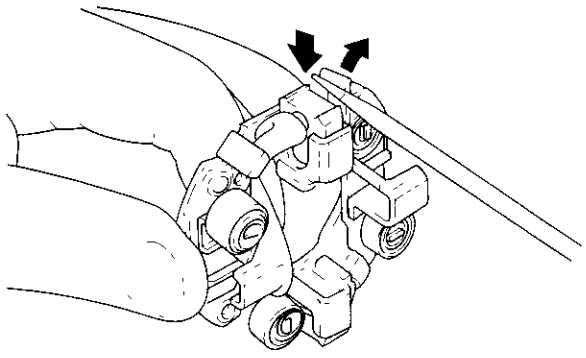

17. Install the armature in the housing, and install the brush holder. Next, pry back each brush spring again, and push the brush down until it seats against the commutator, then release the spring against the end of the brush.

    NOTE: To seat new brushes, slip a strip of # 500 or # 600 sandpaper, with the grit side up, between the commutator and each brush, and smoothly rotate the armature. The contact surface of the brushes will be sanded to the same contour as the commutator.

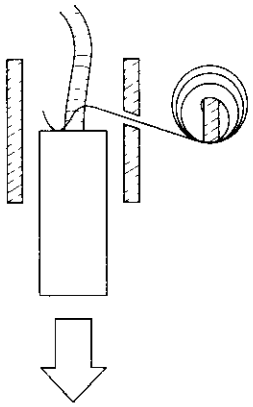

18. Install the starter end cover (A) to retain the brush holder (B).

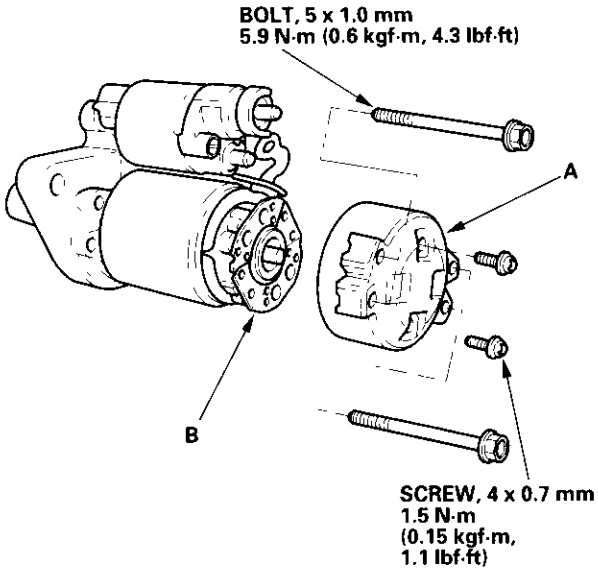

**Overrunning Clutch Inspection**

19. Slide the overrunning clutch along the shaft. Replace it if it does not slide smoothly.

20. Hold the planetary gear shaft (A), and turn the overrunning clutch assembly (B) both ways. If it does not lock in either direction or it locks in both directions, replace it.

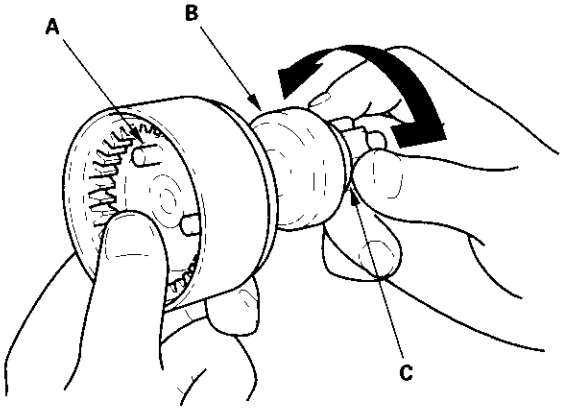


21. If the starter drive gear (C) is worn or damaged, replace the overrunning clutch assembly; the gear is not available separately.

    Check the condition of the torque converter ring gear if the starter drive gear teeth are damaged.

22. Reassemble the starter in reverse order of disassembly.

## Component Location Index

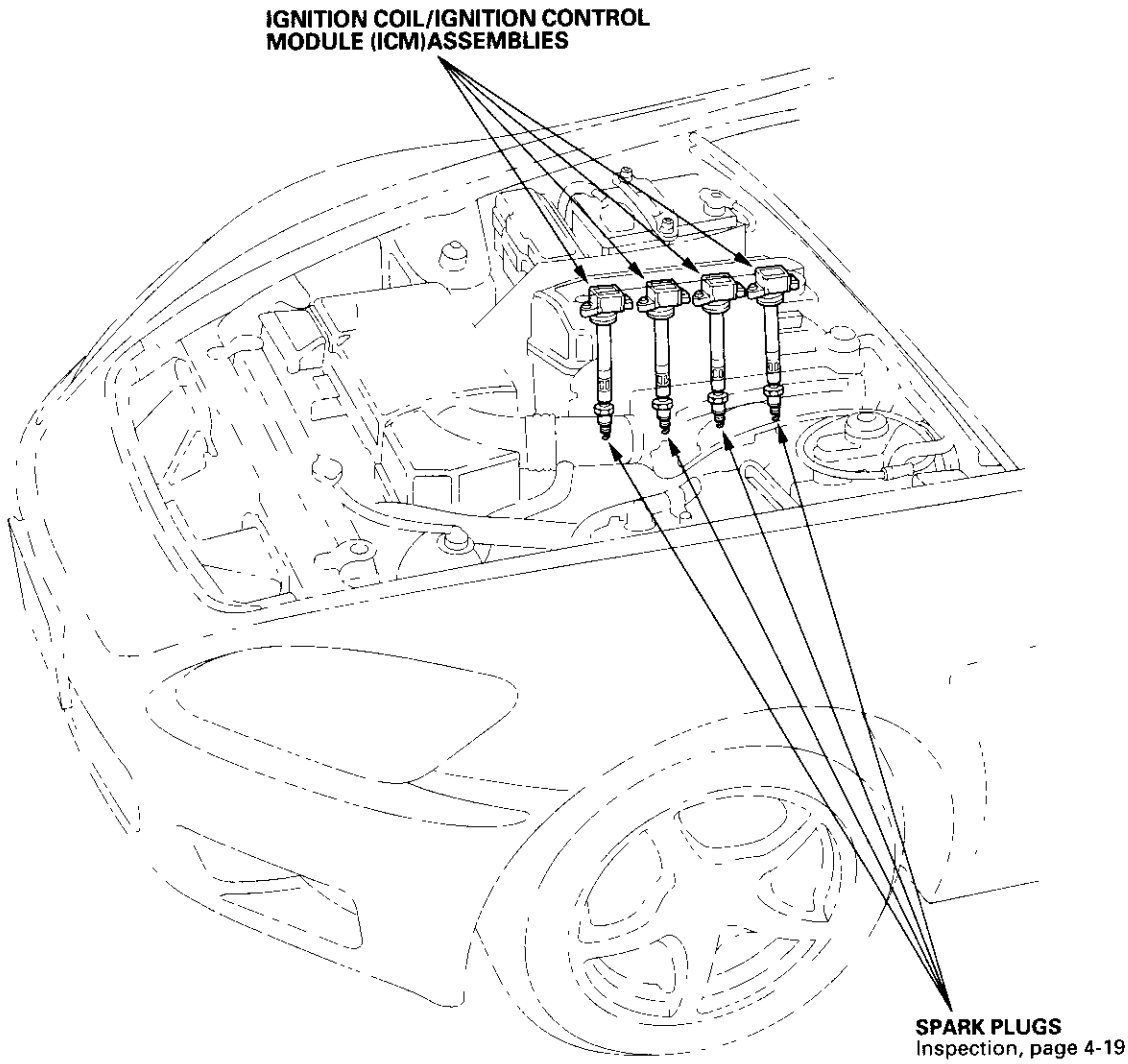

## Circuit Diagram

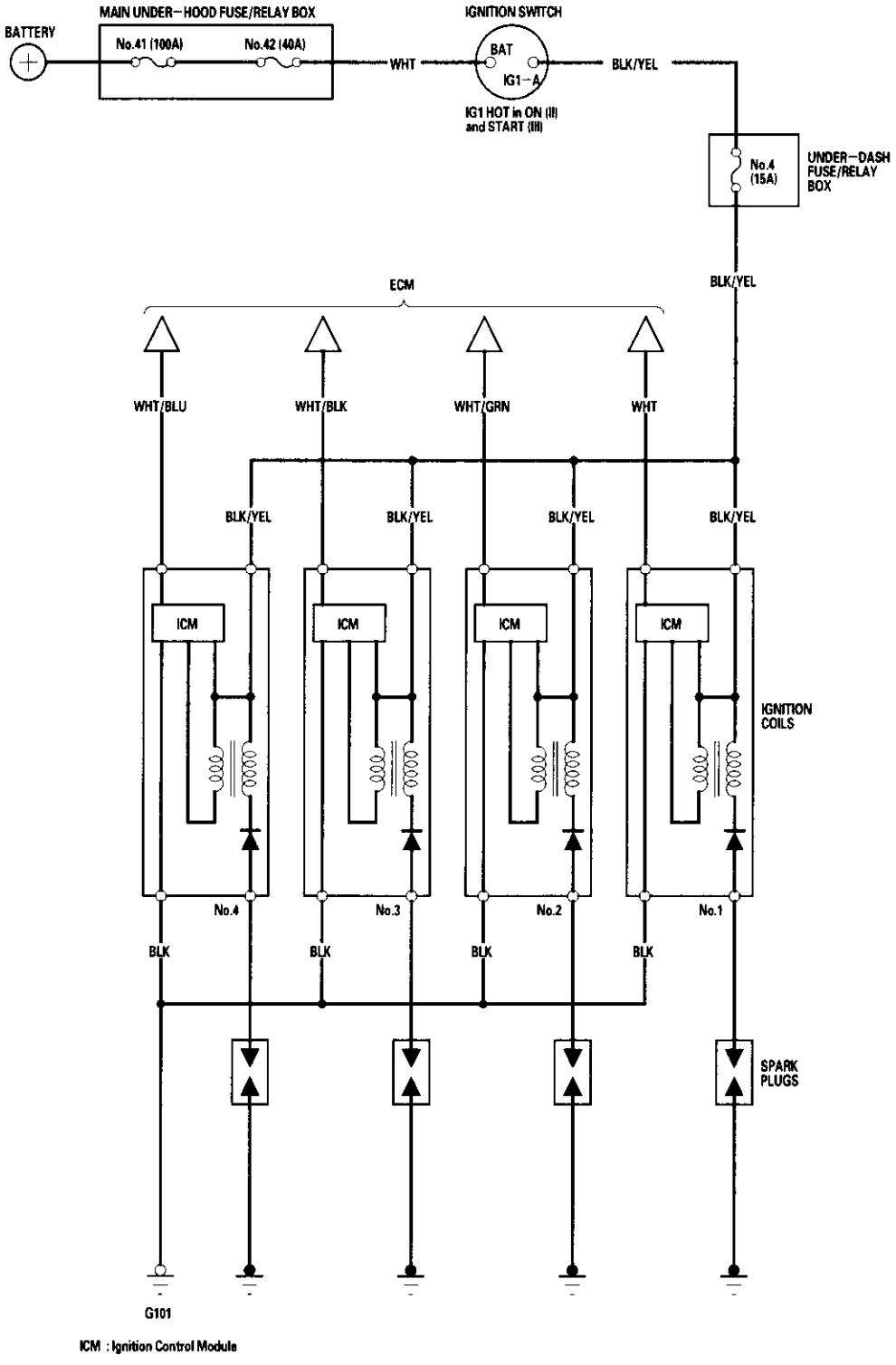


ICM : Ignition Control Module

## Ignition Timing Inspection

1. Connect the Honda PGM Tester to the data link connector (DLC), and check for DTC's. If a DTC is present, siagnose and repair the cause before inspecting the ignition timing.
2. Start the engine. Hold the engine at 3,000 rpm with no load (in Neutral) until the radiator fan comes on, then let it idle.
3. Check the idle speed, and adjust it if necessary (see page 11-100).
4. Follow the tester's prompts to get the tester in the "SCS" mode (see Tester Operator's Manual)
5. Connect the timing light to the No. 1 ignition coil wire.

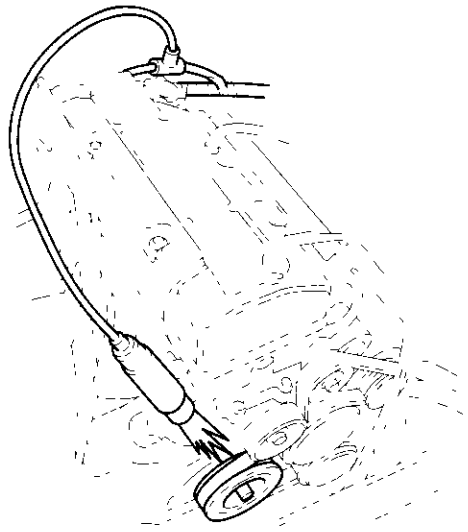

6. Aim the light toward the pointer (A). Check the ignition timing under no load conditions: headlights, blower fan, and air conditioner are not operating. If the ignition timing differs from the specification below, replace the Engine Control Module (ECM) (see page 11-3).

**Ignition Timing:**
**5° ± 2° BTDC (RED mark (B)) at idle in Neutral**

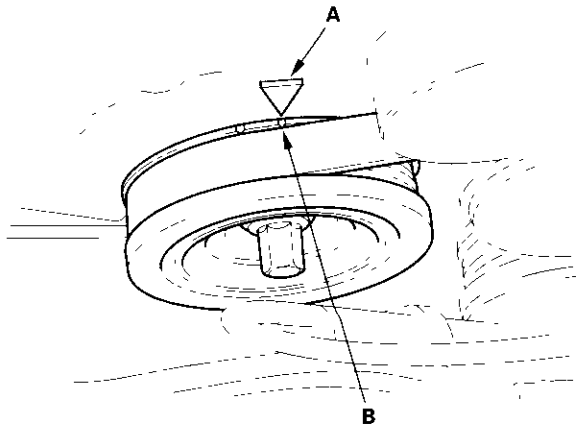


7. Turn the ignition switch OFF.
8. Disconnect the PGM tester and the timing light.

## Spark Plug Inspection

1. Inspect the electrodes and ceramic insulator.

   Burned or worn electrodes may be caused by:

   - Advanced ignition timing
   - Loose spark plug
   - Plug heat range too hot
   - Insufficient cooling

   Fouled plug may be caused by:

   - Retarded ignition timing
   - Oil in combustion chamber
   - Incorrect spark plug gap
   - Plug heat range too cold
   - Excessive idling/low speed running
   - Clogged air cleaner element
   - Deteriorated ignition coils

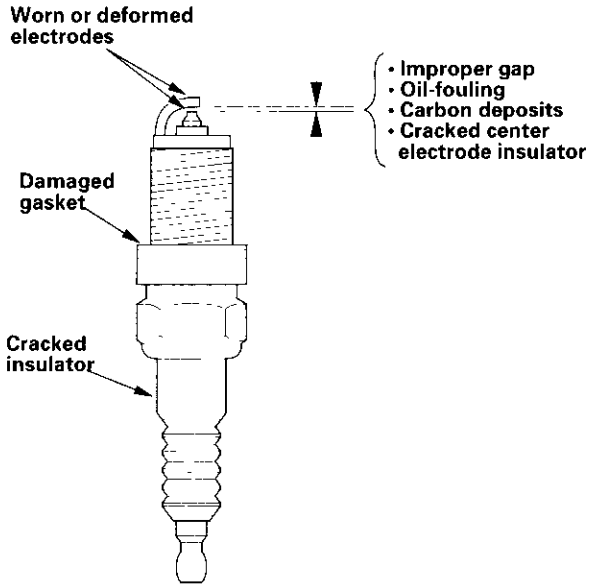


2. Do not adjust the gap of platinum tip plugs (A); replace the spark plug if the gap is out of specification.

   **Electrode Gap:**
   **Standard (New): 1.0 1.1 mm (0.039 – 0.043 in.)**
   **Service Limit: 1.3 mm (0.015 in.)**

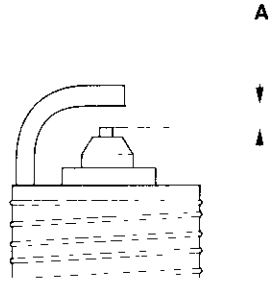


3. Replace the plug at the specified interval, or if the center electrode is rounded (A). Use only the spark plugs listed below.

   **Spark Plugs:**
   **NGK: PFR7G-11S**
   **DENSO: PK22PR-L11S**

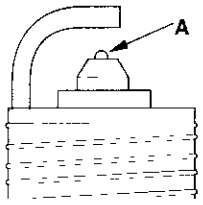


4. Apply a small quantity of anti-seize compound to the plug threads, and screw the plugs into the cylinder head finger-tight. Then torque them to 25 N·m (2.5 kgf·m, 18 lbf·ft).

## Component Location Index

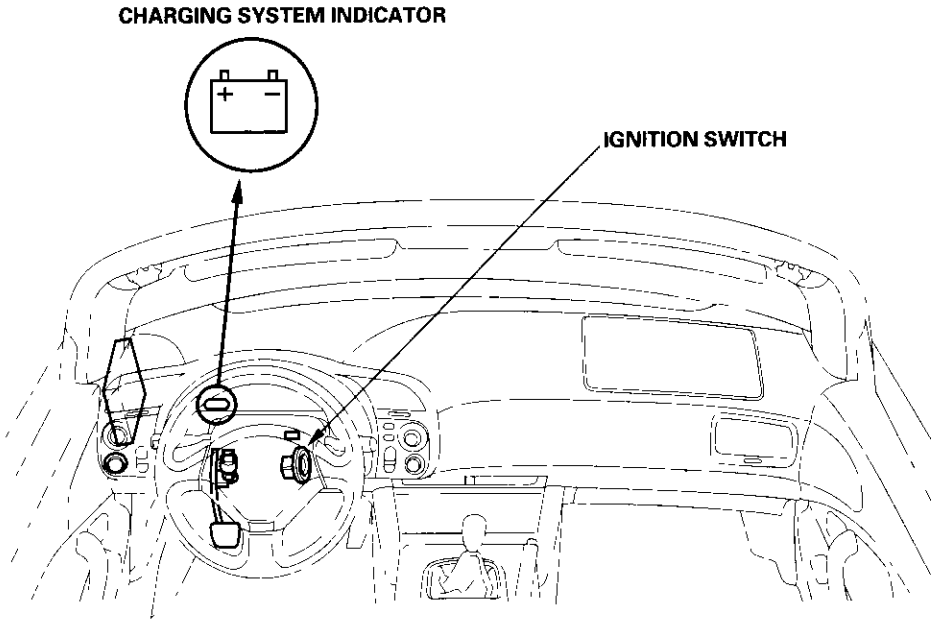


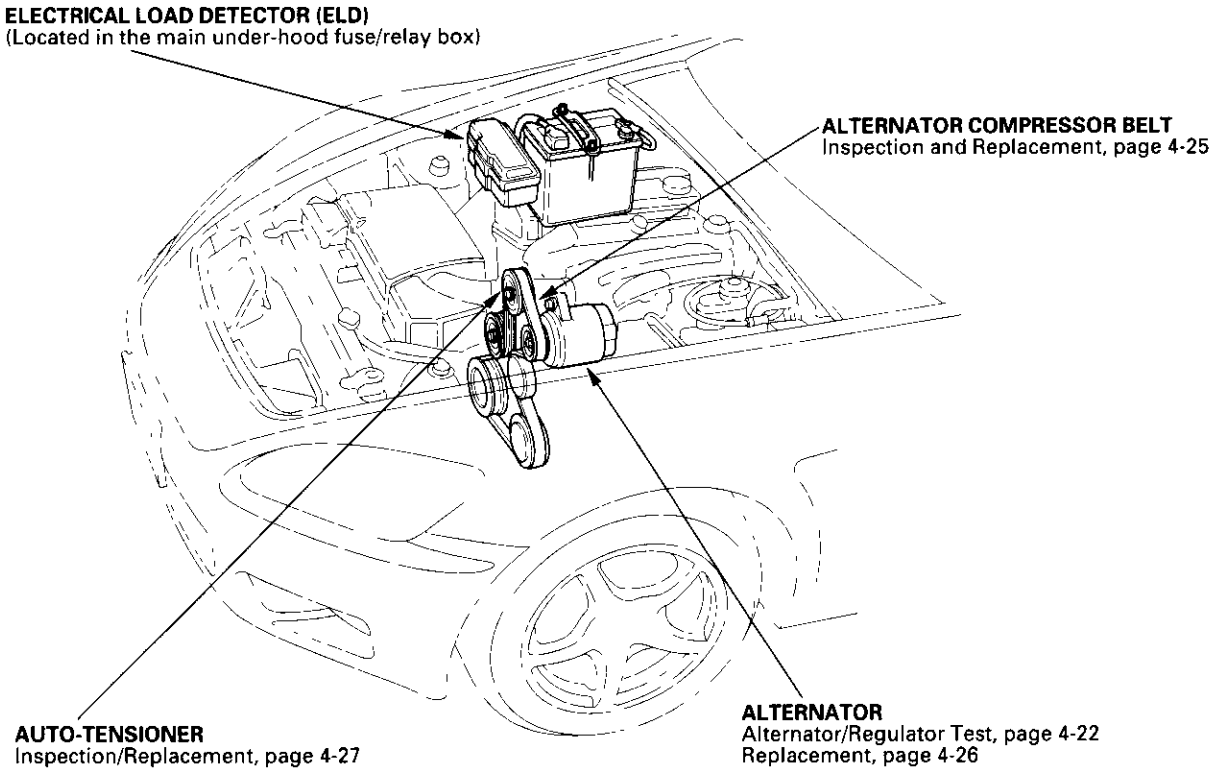

## Circuit Diagram

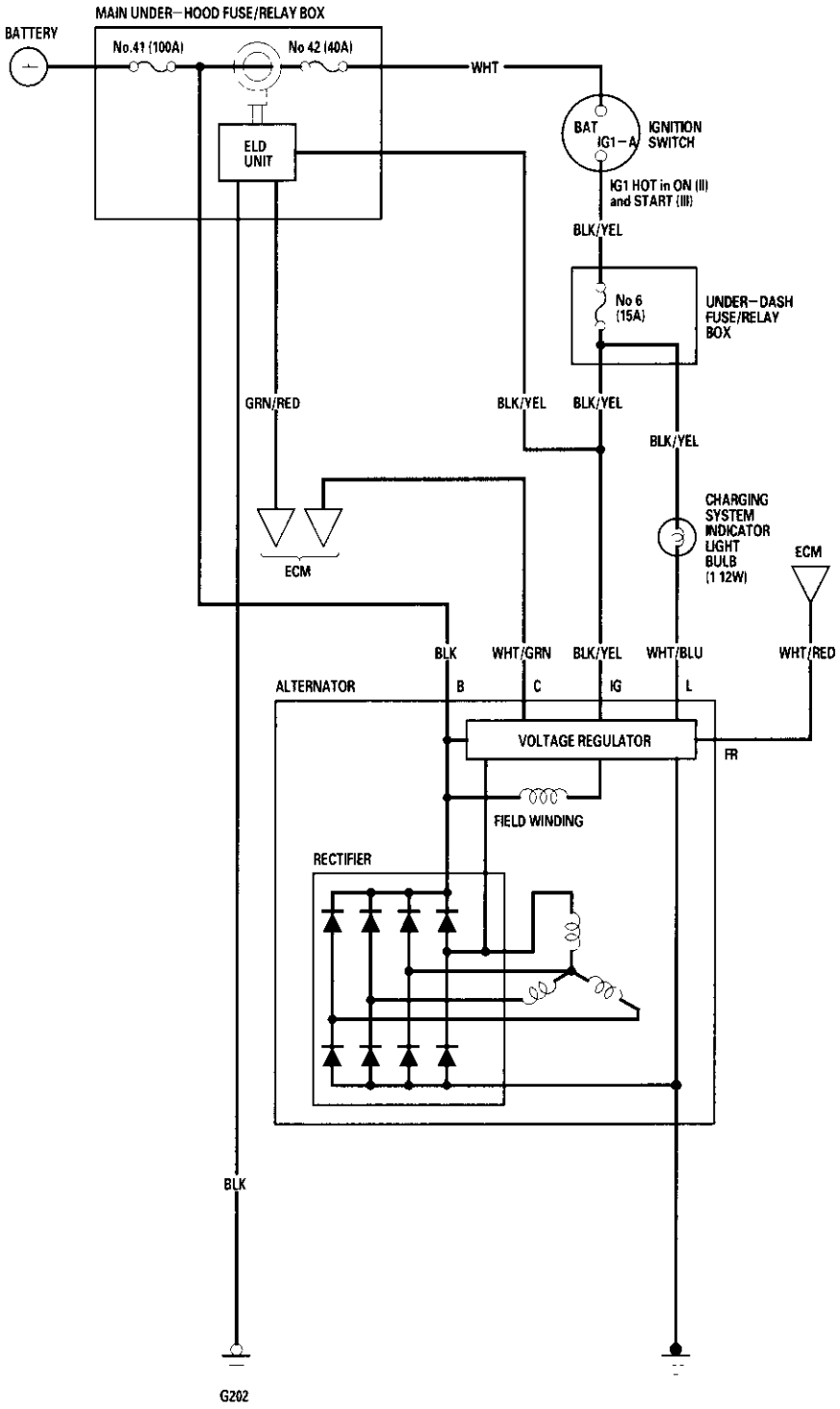

## Charging Circuit Troubleshooting

If the charging system indicator does not come on or does not go off, or the battery is dead or low, test the following items in the order listed below:

Battery (see page 22-39)
Charging system indicator
Alternator and regulator circuit
Alternator control system

### Charging System Indicator Test

1. Turn the ignition switch ON (II).

   *Does the charging system indicator come on?*

   **YES** – Go to step 2.

   **NO** – Go to step 6.

2. Start the engine.

   *Does the charging system indicator go off?*

   **YES** – Charging system indicator circuit is OK. Go to the Alternator and Regulator Circuit Test. ■

   **NO** – Go to step 3.

3. Turn the ignition switch OFF.

4. Disconnect the alternator 4P connector from the alternator.

5. Turn the ignition switch ON (II).

   *Does the charging system indicator come on?*

   **YES** – Turn the ignition switch OFF, and repair the short in the WHT/BLU wire. If the WHT/BLU wire is shorted to ground, the voltage regulator in the alternator may be damaged ■

   **NO** - Go to step 9.

6. Turn the ignition switch OFF.

7. Disconnect the alternator 4P connector from the alternator.

8. Connect the alternator 4P connector terminal No. 3 to body ground with a jumper wire. Turn the ignition switch ON (II).

   **ALTERNATOR 4P CONNECTOR**

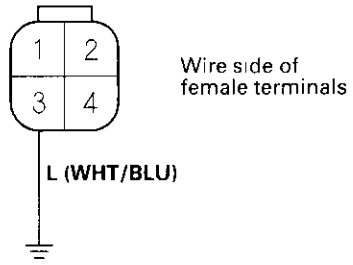


   *Does the charging system indicator come on?*

   **YES** – Go to step 9.

   **NO** – Turn the ignition switch OFF. Check for a blown No. 6 (15 A) fuse and a blown charging system light bulb. If the fuse and bulb are OK, repair the open in the BLK/YEL or WHT/BLU wire to the indicator bulb. ■

9. Measure the voltage at the No. 1 terminal of the alternator 4P connector with the ignition switch ON (II).

   **ALTERNATOR 4P CONNECTOR**

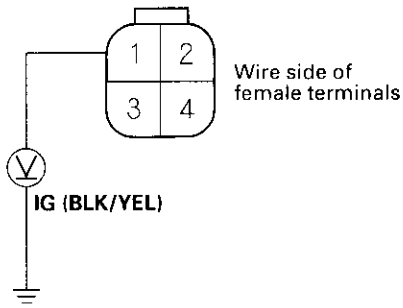


   *Is there battery voltage?*

   **YES** – Go to Alternator and Regulator Circuit Test. ■

   **NO** – Repair open in the BLK/YEL wire between the alternator and the driver's under-dash fuse relay box. ■

## Alternator and Regulator Circuit Test

1. Be sure the battery connections are good, and that the battery is sufficiently charged and in good condition (see page 22-39).

2. Connect a VAT-40 (or equivalent tester), and turn the selector switch to position 1 (starting).

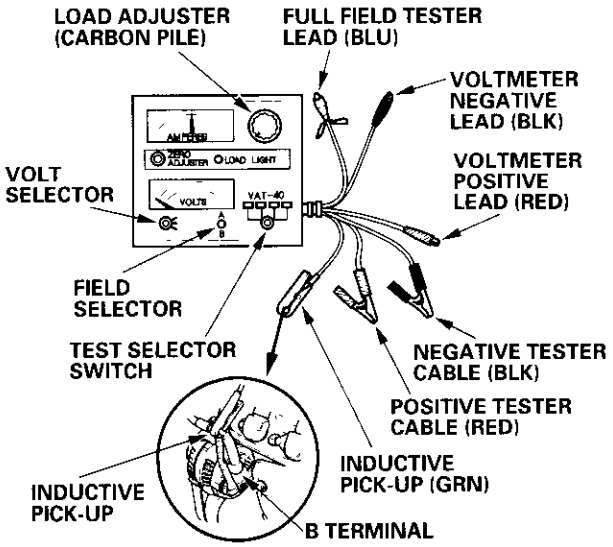


3. Shift to Neutral, and start the engine. Hold the engine at 3,000 rpm, with no load until the radiator fan comes on, then let it idle.

4. Raise the engine speed to 2,000 rpm, and hold it there.

   *Is there voltage over 15.1 V?*

   **YES** — Replace the rear housing assembly. ■

   **NO** — Go to step 5.

5. Release the accelerator pedal, and let the engine idle.

6. Make sure all accessories are turned off. Turn the selector switch to position 2 (charging).

7. Remove the inductive pick-up, and zero the ammeter.

8. Place the inductive pick-up over the B terminal wire of the alternator so that the arrow points away from the alternator.

9. Raise the engine speed to 2,000 rpm, and hold it there.

   *Is there voltage less than 13.5 V?*

   **YES** — Go to Alternator Control System Test. ■

   **NO** — Go to step 10.

10. Apply a load with the VAT-40 until the battery voltage drops to between 12  13.5 V.

    *Is the amperage 87.5 A or more?*

    **YES** — The charging system is OK. ■

    **NO** Repair or replace the alternator (see page 4-29). ■

(cont'd)

## Charging Circuit Troubleshooting (cont'd)

### Alternator Control System Test

1. Check for proper operation of the electrical load detector (ELD) by checking that the malfunction indicator lamp (MIL) (see page 11-3). If a DTC is present, diagnose and repair the cause before continuing with this test.
2. Disconnect the alternator 4P connector from the alternator.
3. Start the engine, and turn the headlights (high beam) ON.
4. Measure voltage between the alternator 4P connector terminal No. 2 and the positive terminal of the battery.

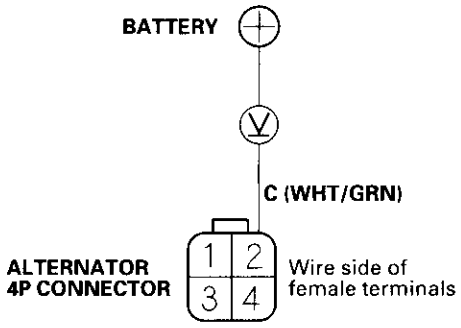


*Is there 1 V or less?*

**YES** – Go to step 8.

**NO** – Go to step 5.

5. Turn the headlight and ignition switch OFF.
6. Disconnect engine control module (ECM) connector C (31P).
7. Check for continuity between the ECM connector C terminal No. 2 and body ground.

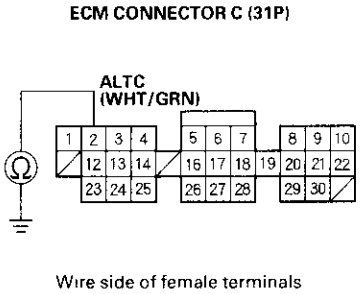


*Is there continuity?*

**YES** – Repair short to ground in the wire between the alternator and ECM. ■

**NO** – Check that the terminals are firmly seated at the connectors. If OK, substitute a known-good PCM and recheck (see page 11-4). If prescribed voltage is now available, replace the original ECM (see page 11-5). ■

8. Turn the headlight and ignition switch OFF.
9. Disconnect ECM connector C (31P).
10. Check for continuity between the ECM connector C terminal No. 2 and alternator 4P connector terminal No. 2.

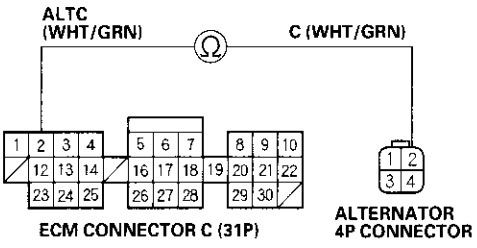


*Is there continuity?*

**YES** – Repair the alternator (see page 4-29). ■

**NO** – Repair an open in the wire between the alternator and ECM. ■

## Alternator-compressor Belt Inspection and Replacement

1. Check that the pointer (A) on the auto-tensioner housing is not beyond the edge of the indicator rib (B) on the tensioner base.

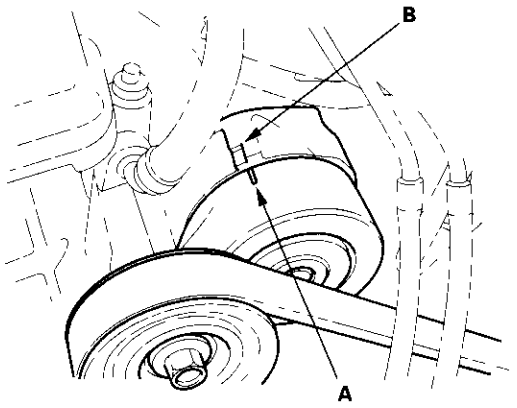


2. Move the auto-tensioner (A) to relieve tension from the alternator belt (B), and remove the alternator-compressor belt.

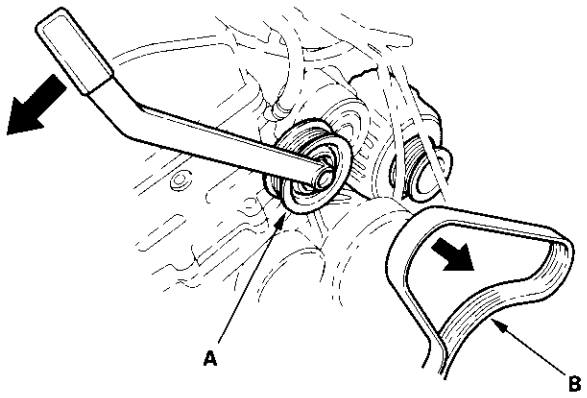


3. Install the new belt in the reverse order of removal.

## Alternator Replacement

1. Make sure you have the anti-theft code for the radio, then write down the frequencies for the radio's preset buttons.
2. Disconnect the negative cable front the battery, then disconnect the positive cable.
3. Move the auto-tensioner (A) to relieve tension from the alternator belt (B), and remove the alternator-compressor belt.

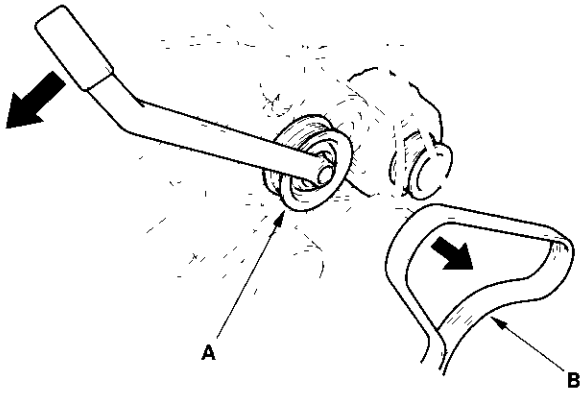


4. Disconnect the 4P connector (A) from the alternator (B), and disconnect BLK wire from the alternator B terminal (C).

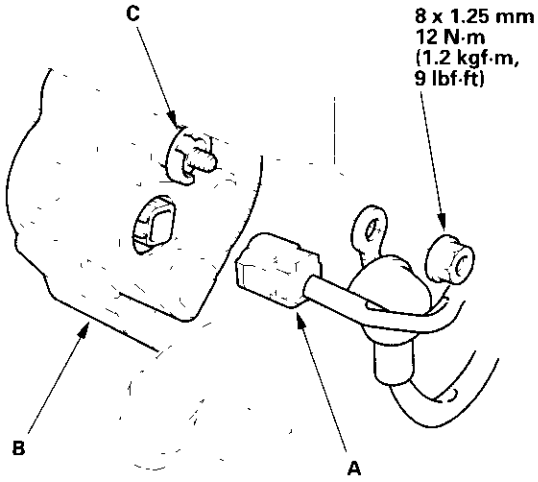


5. Remove the mounting bolts, then remove the alternator.

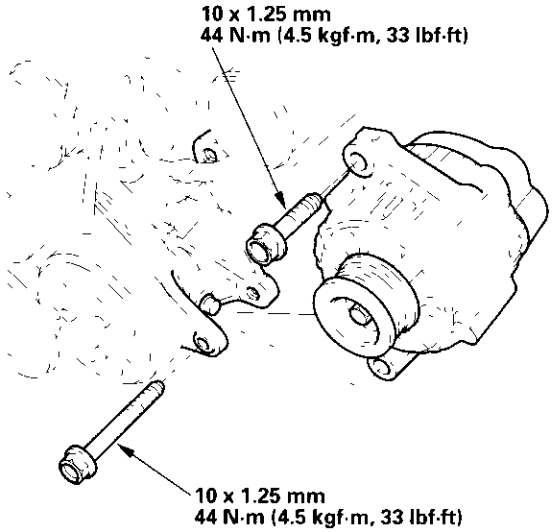


6. Install the alternator and alternator-compressor belt in the reverse order of removal.
7. Connect the positive cable and negative cable to the battery.
8. Enter the anti-theft code for the radio, then enter the customer's radio station presets.
9. Set the clock.
10. Perform the engine control module (ECM) idle learn procedure (see page 11-100).

## Auto-Tensioner Inspection/Replacement

1. Check whether there is a change in the position of the auto-tensioner before starting the engine and after starting the engine. If there is a change in the position, replace the auto-tensioner.

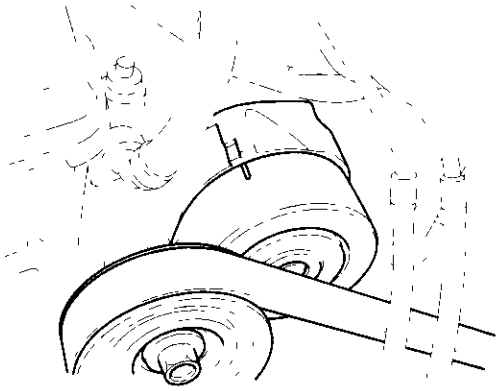

2. Check for abnormal noise from the tensioner pulley. If abnormal noise is heard, remove the auto-tensioner and replace the tensioner pulley.

3. Turn off the engine. Move the auto-tensioner (A) with the belt tensioner release tool to relieve tension from the alternator-compressor belt (B), then remove the belt.

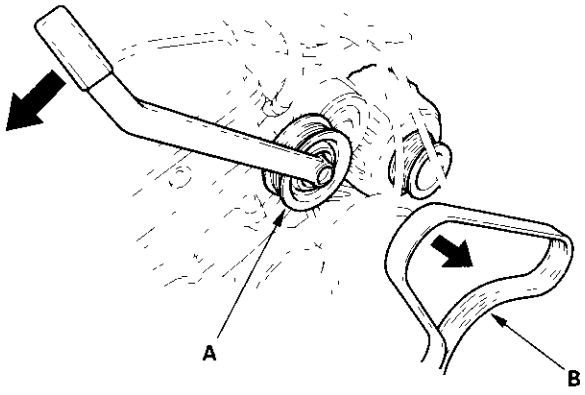


4. Attach a torque wrench (A) to the pulley bolt. Measure the torque on the tensioner internal spring with moving the torque wrench in the direction shown. If the measurement is less than the specified value, replace the auto-tensioner.

**Specified Torque: 26.2 N·m (2.67 kgf·m, 19.3 lbf·ft)**

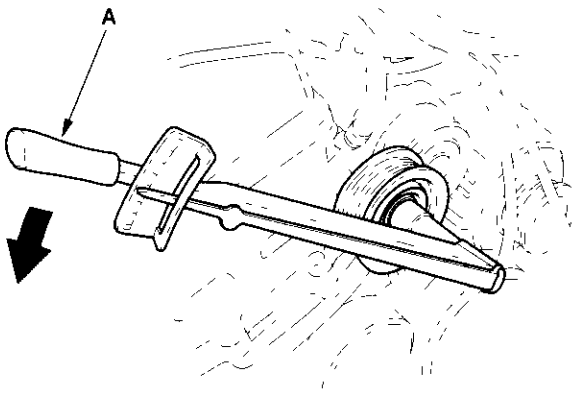


5. Move the auto-tensioner within its limit with the belt tension release tool in the direction shown, check that the tensioner moves smoothly and check for abnormal noise while moving the tensioner. If the tensioner does not move smoothly or there is abnormal noise, replace the auto-tensioner.

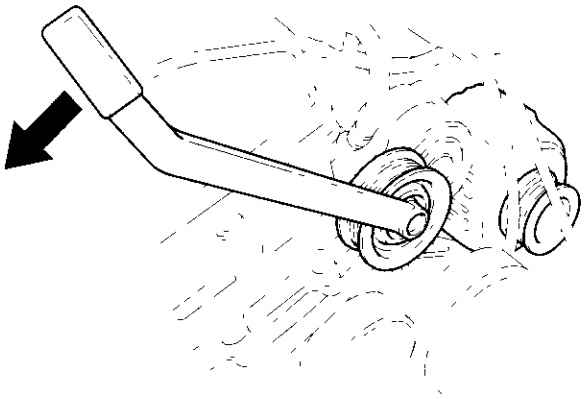

(cont'd)

## Auto-Tensioner Inspection/Replacement (cont'd)

6. Remove the auto-tensioner.

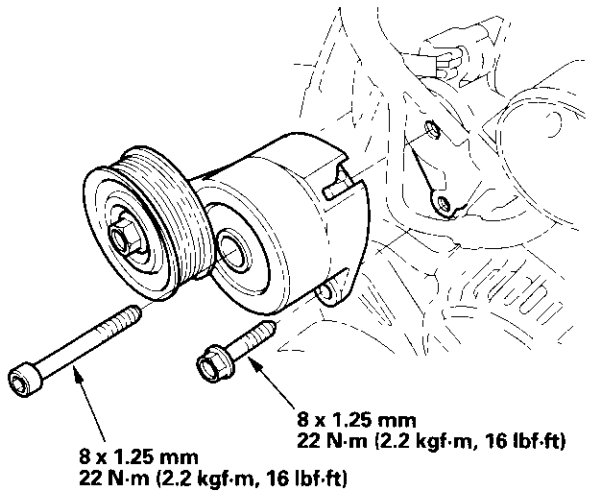


7. If necessary, to remove the pulley bolt, secure the auto-tensioner in a bench vise with soft jaws. To prevent damage to the tensioner, always use soft jaws or equivalent materials between the tensioner and the vise.

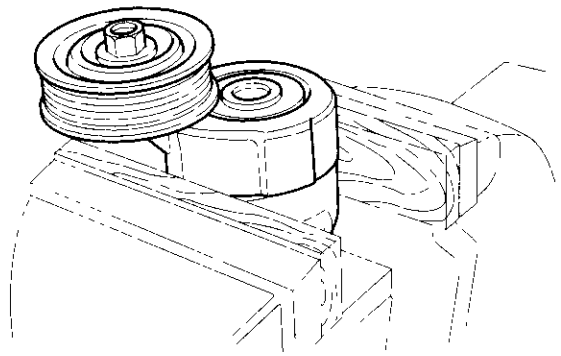

8. Remove the pulley bolt (left-hand threads), and replace the tensioner pulley.

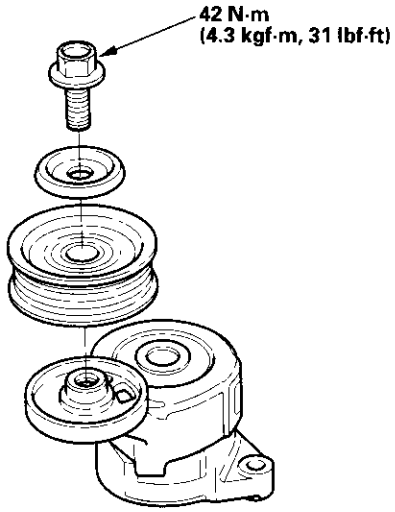

# Alternator Overhaul

## Exploded View

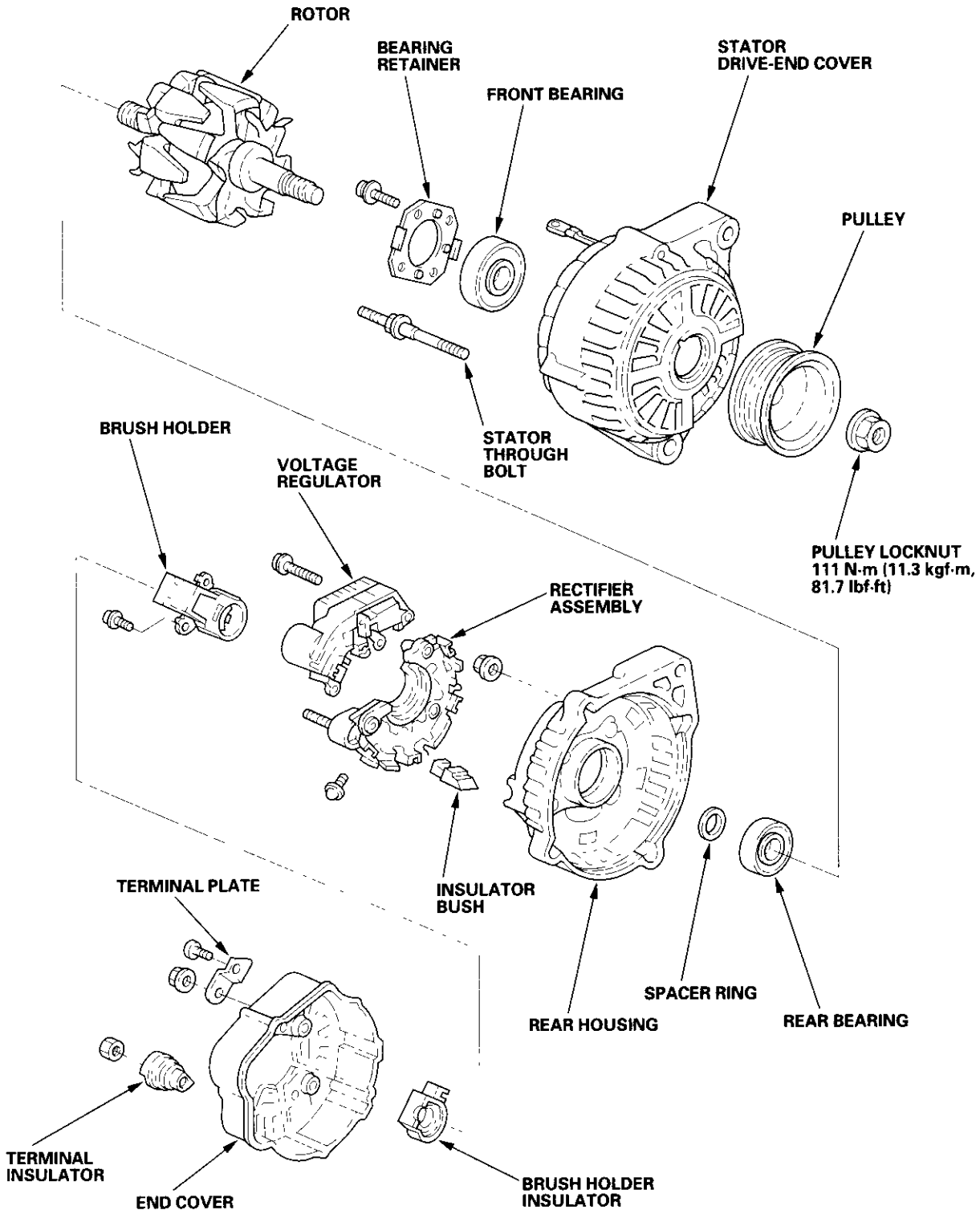


(cont'd)

## Alternator Overhaul (cont'd)

**Special Tools Required**
- Driver 07749-0010000
- Attachment, 52 x 55 mm 07746-0010400

NOTE: Refer to the Exploded View as needed during this procedure.

1. Test the alternator and regulator before you remove them (see page 4-22).
2. Remove the alternator (see page 4-26).
3. If the front bearing needs replacing, remove the pulley locknut with a 10 mm wrench (A) and a 22 mm wrench (B). If necessary, use an impact wrench.

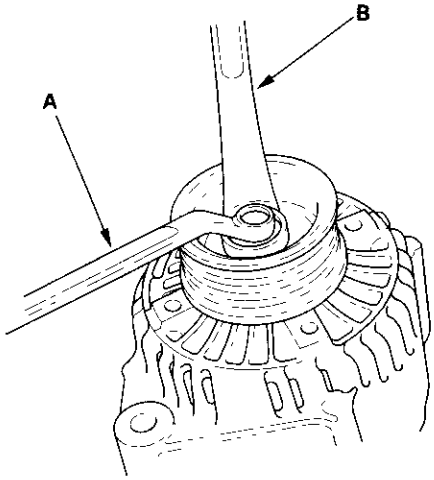


4. Remove the three flange nuts (A) and the screw (B) from the alternator, then remove the plate terminal (C).

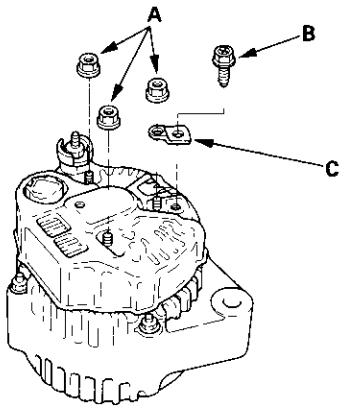


5. Remove the washer nut (A) and insulator (B) from the "B" terminal, then remove the end cover (C) and dust seal (D).

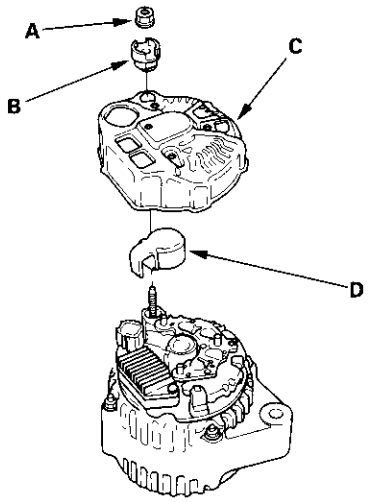


6. Remove the brush holder.

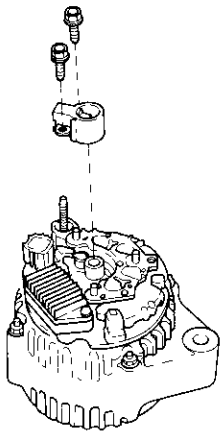

7. Remove the voltage regulator.

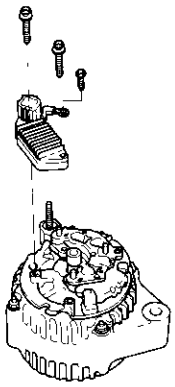

8. Remove the four screws (A), then remove the rectifier (B) and rubber seal (C).

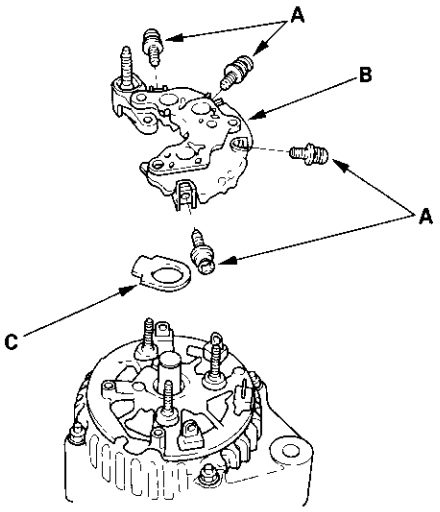


9. Remove the four flange nuts.

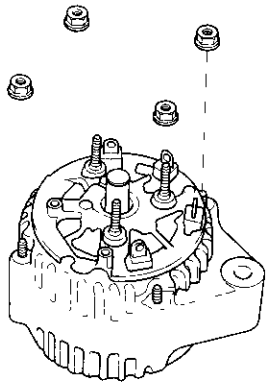

10. Remove the four insulators (A), rear housing (B), and washer (C).

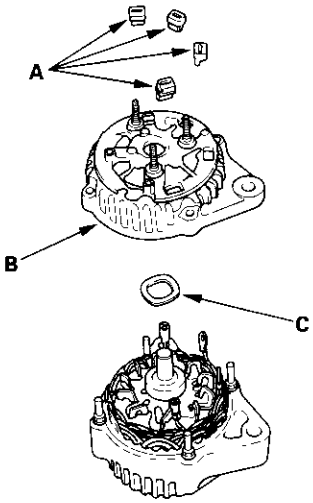


(cont'd)

## Alternator Overhaul (cont'd)

11. (If you are not replacing the front bearing and/or rear bearing, go to step 18). Remove the rotor from the stator drive end housing.

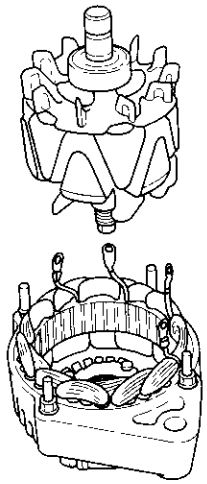

12. Inspect the rotor shaft for galling, and inspect the bearing journal surface in the stator housing for seizure marks.

    - If either the rotor or stator housing is damaged, replace the alternator.
    - If both the rotor and the stator housing are OK, go to step 13.

13. Remove the rear bearing using a puller as shown.

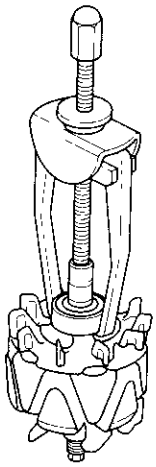

14. With a hammer and commercially available tools shown, install a new rear bearing on the rotor shaft.

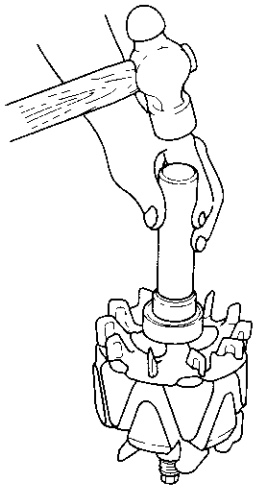

15. Remove the front bearing retainer plate.

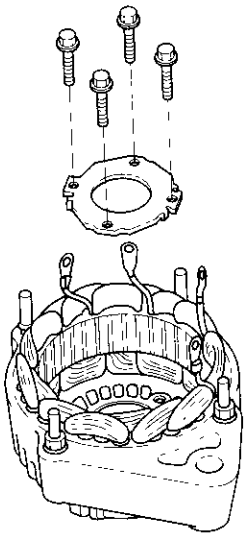

16. Support the stator housing in a vise, and drive out the front bearing with a brass drift (A) and hammer.

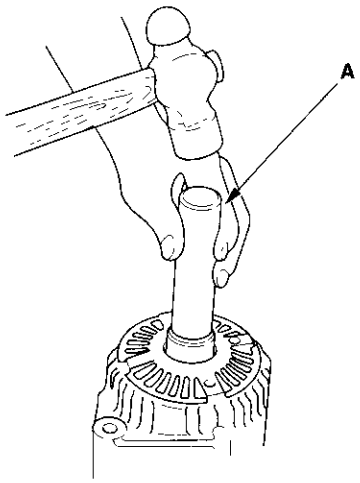


17. With a hammer and the special tools, install a new front bearing in the stator housing.

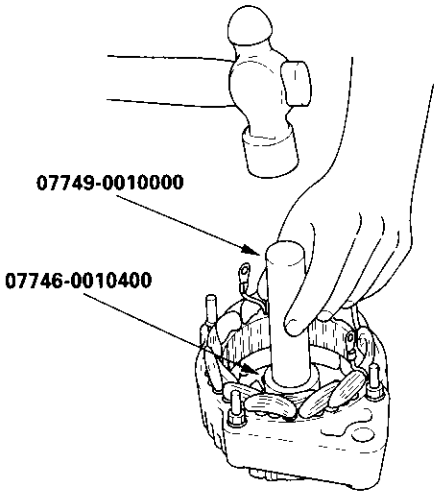


**Rectifier Test**

18. Check for continuity in each direction, between the B terminal and P terminals, and between the E terminal and P terminals of each diode pair. All diodes should have continuity in only one direction. Because the rectifier diodes are designed to allow current to pass in one direction, and the rectifier is made up of eight diodes (four pairs), you must test each diode in both directions for continuity with an ohmmeter that has diode checking capability: a total of 16 checks.

    - If any diode is faulty, replace the rectifier assembly. (Diodes are not available separately.)
    - If all the diodes are OK, go to step 19.

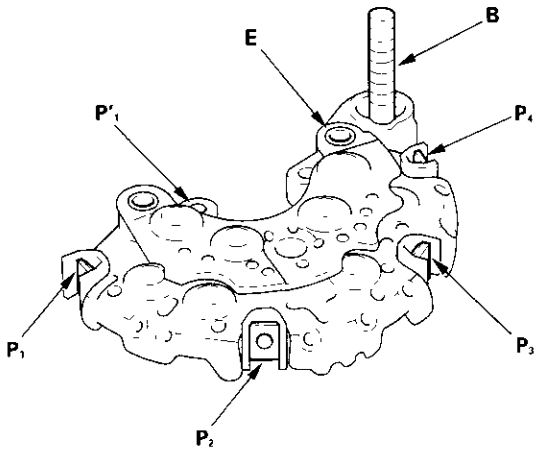


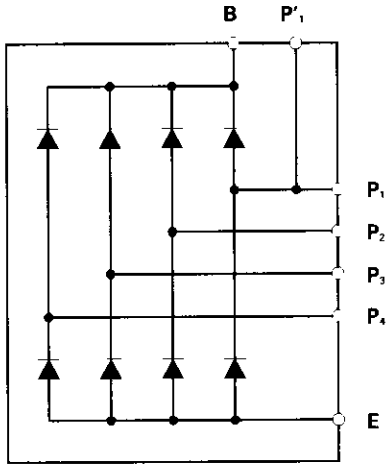


(cont'd)

## Alternator Overhaul (cont'd)

### Alternator Brush Inspection

19. Measure the length of both brushes (A) with a vernier caliper (B).

    - If either brush is shorter than the service limit, replace the brush assembly.
    - If brush length is OK, go to step 20.

**Alternator Brush Length:**
**Standard (New): 10.5 mm (0.41 in.)**
**Service Limit: 1.5 mm (0.06 in.)**

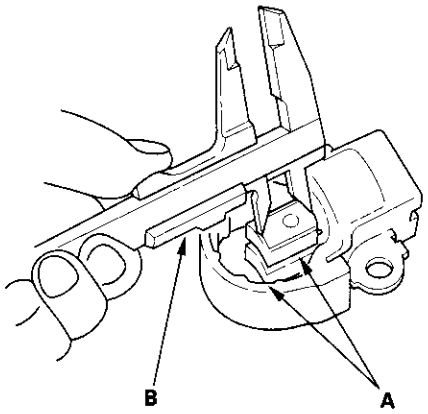


### Rotor Slip Ring Test

20. Check that there is continuity between the slip rings (A).

    - If there is continuity, go to step 21.
    - If there is no continuity, replace the alternator.

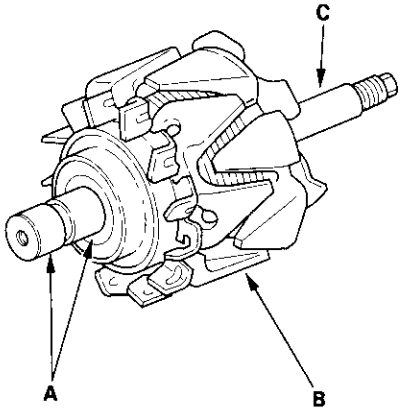


21. Then check that there is no continuity between each slip ring and the rotor (B) and the rotor shaft (C).

    - If there is no continuity, go to step 22.
    - If there is continuity, replace the alternator.

### Stator Test

22. Check that there is continuity between each pair of leads (A).

    - If there is continuity, go to step 23.
    - If there is no continuity, replace the alternator.

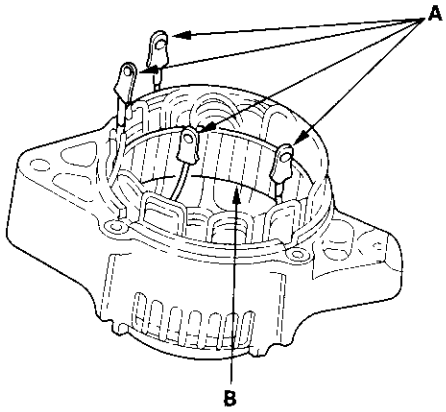


23. Check for no continuity between each lead and the coil core (B).

    - If there is no continuity, go to step 24.
    - If there is continuity, replace the alternator.

24. Reassemble the alternator in reverse order of disassembly, and note these items:

    - Be careful not to get any grease or oil on the slip rings.
    - If you removed the pulley, tighten its locknut to 111 N·m (11.3 kgf·m, 81.7 lbf·ft) when you reinstall it.

## Component Location Index

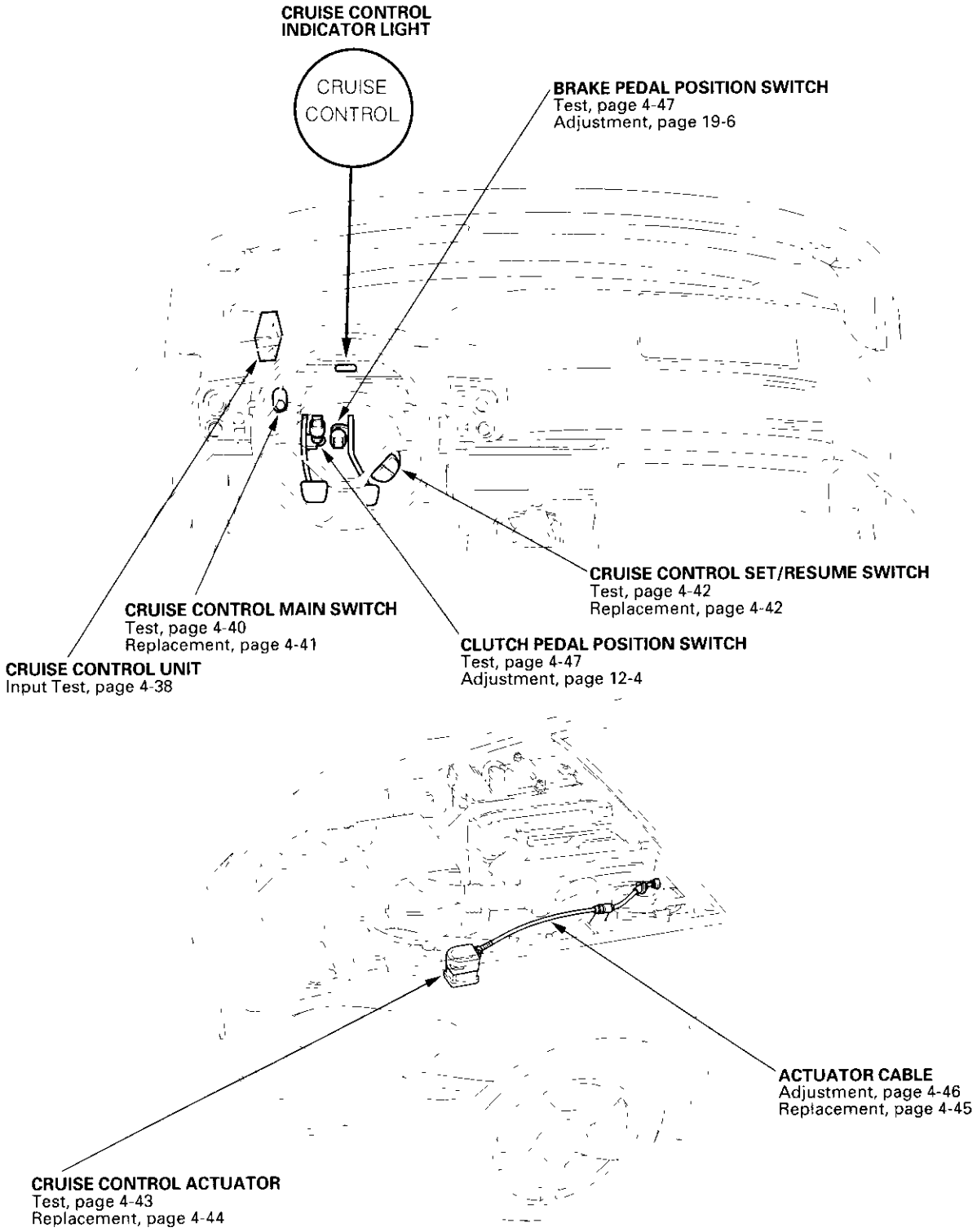

## Circuit Diagram

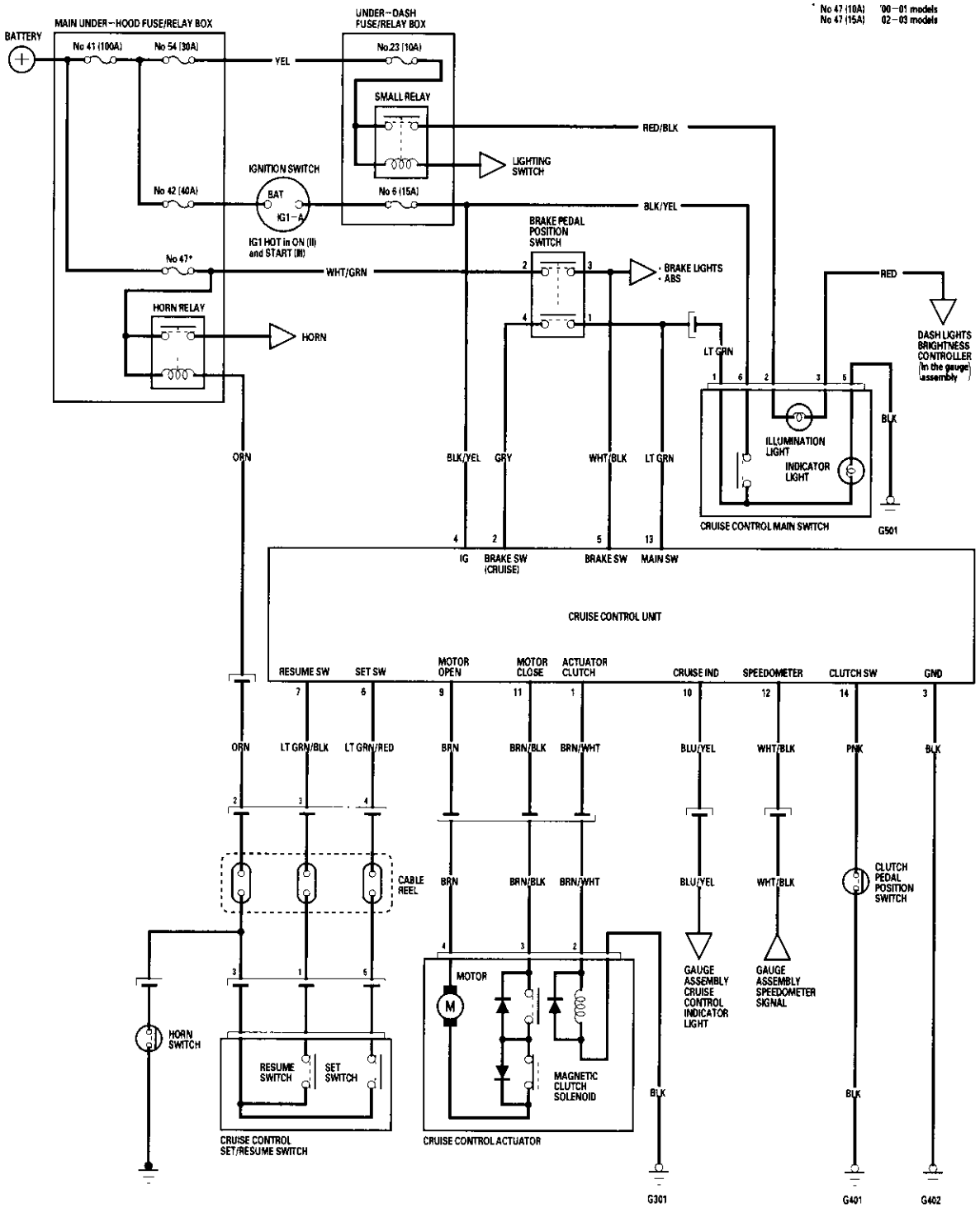

## Symptom Troubleshooting Index

NOTE:
- The numbers in the table show the troubleshooting sequence.
- Before troubleshooting,
  - check that the speedometer works properly.
  - check the No. 23 (10 A) and No. 6 (15 A) fuses in the under-dash fuse/relay box, and No. 47 (10 A)( No. 47 (15 A) )fuse in the main under-hood fuse/relay box.
  - check that the horn sounds.
  - check the tachometer to see if it works properly.

| Symptom | Diagnostic procedure | Also check for |
|---|---|---|
| Cruise control cannot be set. | 1. Check main switch (see page 4-41)<br>2. Check SET/RESUME switch (see page 4-42)<br>3. Test brake pedal position switch (see page 4-47) and check its adjustment (see page 12-4).<br>4. Test clutch pedal position switch (see page 4-47) and check its adjustment (see page 12-4).<br>5. Check cruise control unit (see page 4-38) | • Poor ground: G101<br>• Open circuit, loose or disconnected terminals: BLK/YEL, LT GRN, LT GRN/RED, GRY, ORN, WHT/BLK |
| Cruise control can be set, but indicator light does not go on. | 1. Check dimming circuit in gauge (see page 22-47)<br>2. Check cruise control unit (see page 4-38) | • Poor ground: G501<br>• Open circuit, loose or disconnected terminals: YEL, LT GRN |
| Cruise speed is noticeably higher or lower than what was set. | 1. Check cruise control actuator and cable adjustment<br>2. (see page 4-46)<br>Check cruise control unit (see page 4-38) | |
| Excessive overshooting or undershooting when trying to set speed. | 1. Check cruise control actuator and cable adjustment<br>2. (see page 4-46)<br>Check cruise control unit (see page 4-38) | |
| Speed fluctuates on a flat road with cruise control set. | 1. Check cruise control actuator and cable adjustment<br>2. (see page 4-46)<br>Check cruise control unit (see page 4-38) | |
| Vehicle does not decelerate or accelerate accordingly when SET/RESUME button is pushed. | 1. Check SET/RESUME switch (see page 4-42)<br>2. Check cruise control unit (see page 4-38) | Open circuit, loose or disconnected terminals: LT GRN/RED, LT GRN/BLK |
| Set speed does not cancel when brake pedal is pressed. | 1. Test brake pedal position switch (see page 4-47) and check it's adjustment (see page 12-4).<br>2. Check cruise control unit (see page 4-38) | Open circuit, loose or disconnected terminals: WHT/BLK |
| Set speed does not cancel when clutch pedal is pressed. | 1. Test clutch pedal position switch (see page 4-47) and check its adjustment (see page 12-4).<br>2. Check cruise control unit. | Short to ground in the PNK wire. |
| Set speed does not cancel when main switch is pushed OFF | 1. Check main switch (see page 4-41)<br>2. Check cruise control unit (see page 4-38) | Open circuit, loose or disconnected terminals, short to power: LT GRN |
| Set speed will not resume when RESUME button is pushed (with main switch on, and set speed temporarily cancelled by pressing the brake pedal). | 1. Check SET/RESUME switch (see page 4-42)<br>2. Check cruise control unit (see page 4-38) | Open circuit, loose or disconnected terminals: LT GRN/BLK |

[ ] : '02-03 models

## Cruise Control Unit Input Test

SRS components are located in this area, review the SRS component locations, precautions, and procedures in the SRS section (24) before performing repairs or service.

1. Remove the knee bolster under the steering column.
2. Disconnect the 14P connector from the cruise control unit.
3. Inspect the connector and connector terminals to be sure they are making good contact.
4. If the terminals are bent, loose, or corroded, repair them as necessary, and recheck the system.
5. Perform the following input test, at the 14P connector.
   - If a test indicates a problem, find and correct the cause, then recheck the system.
   - If all the tests prove OK, check the cruise control actuator operation and adjust the actuator cable.

CRUISE CONTROL UNIT CONNECTOR (14P)

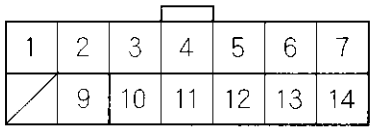


Wire side of female terminals

| Cavity | Wire color | Test condition | Test: Desired result | Possible cause if result is not obtained |
|---|---|---|---|---|
| 1 | BRN/WHT | Connect to terminal 4 (BLK/YEL) with a jumper wire, and turn ignition switch on. | The magnetic clutch should click and the output link should be locked. | • Faulty actuator<br>• Poor ground (G301)<br>• An open in the wire |
| 2 | GRY | Ignition switch ON (II), main switch ON and brake pedal pressed, then released | Check for voltage to ground: There should be 0 V with the brake pedal pressed, and there should be battery voltage with the brake pedal released. | • Faulty brake switch<br>• Faulty main switch<br>• An open in the wire<br>• Blown No. 47 (10 A) ( No. 47 (15 A) ) fuse in the main under-hood fuse/relay box |
| 3 | BLK | Under all conditions | Check for continuity to ground: There should be continuity. | • Poor ground (G402)<br>• An open in the wire |
| 4 | BLK/YEL | Ignition switch ON (II) | Check for voltage to ground: There should be battery voltage. | • Blown No. 47 (10 A) ( No.47 (15A) ) fuse in the main under-dash fuse/relay box<br>• An open in the wire |
| 5 | WHT/BLK | With brake pedal pressed and released | Check for voltage to ground: There should be battery voltage with the brake pedal pressed, and there should be 0 V with the brake pedal released. | • Blown No. 47 (10 A) ( No. 47 (15 A) ) fuse in the main under-hood fuse/relay box<br>• Faulty brake switch<br>• An open in the wire |

[ ] : '02-03 models

| Cavity | Wire color | Test condition | Test: Desired result | Possible cause if result is not obtained |
|---|---|---|---|---|
| 6 | LT GRN/ RED | Ignition switch ON (II), main switch ON and SET button pushed | Check for voltage to ground: There should be battery voltage. When testing terminal No. 6, there should be no voltage on terminal No. 7. When testing terminal No. 7, there should be no voltage on terminal No. 6. | • Blown No. 47 (10 A) ( No. 47 (15 A) ) fuse in the main under-hood fuse/relay box<br>• Faulty horn relay<br>• Faulty set/resume switch<br>• Faulty cable reel<br>• An open in the wire |
| 7 | LT GRN/ BLK | Ignition switch ON (II), main switch ON and RESUME button pushed | | |
| 9 | BRN | Connect the BRN terminal to terminal 4 (BLK/YEL) with a jumper wire. Connect the BRN/ BLK terminal to body ground. Turn the ignition switch ON (II). | Check the actuator motor: You should be able to hear it run. | • Faulty actuator<br>• Poor ground (G301)<br>• An open in the wire |
| 11 | BRN/BLK | | | |
| 10 | BLU/YEL | Ignition switch ON (II), attach to ground. | Cruise indicator light should come on. | • Blown No. 5 (7.5 A) fuse in the under-dash fuse/relay box<br>• Blown cruise control indicator<br>• Faulty cruise control indicator circuit in gauge assembly<br>• An open in the wire |
| 12 | WHT/BLK | Raise the rear of vehicle, and shift to Neutral. Ignition switch ON (II), main switch ON and rotate one rear wheel while holding the other | Check voltage between No. 12 (+) and No. 3 ( – ) terminals: There should be 0 V and about 5 V or battery voltage alternately. | • Faulty vehicle speed sensor<br>• Faulty speedometer circuit in the gauge assembly<br>• An open in the wire |
| 13 | LT GRN | Ignition switch ON (II) and main switch ON | Check for voltage to ground: There should be battery voltage. | • Blown No. 47 (10 A) ( No.47 (15A) ) fuse in the under-dash fuse/relay box<br>• Faulty main switch<br>• An open in the wire |
| 14 | PNK | Clutch pedal pressed and released | Check for continuity to ground: There should be no continuity with the clutch pedal pressed, and there should be continuity with the clutch pedal released. | • Faulty clutch switch<br>• Misadjusted clutch pedal position switch installation<br>• Poor ground (G401)<br>• An open in the wire |

[ ] : '02-03 models

6. If any test indicates a problem, find and correct the cause, then recheck the system. If all the input tests prove OK, the control unit may be faulty. Substitute a known-good cruise control unit and reset. If the system works properly, replace the cruise control unit.

## Main Switch Test

1. Carefully pry the cruise control main switch out of the instrument panel, then disconnect the connector from the switch.

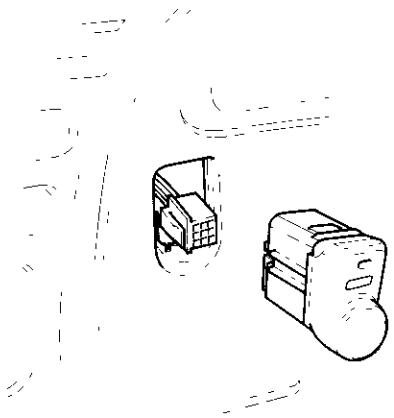

2. Check for continuity between terminals No. 6 and No. 1, and between terminals No. 6 and No. 5 on the switch. There should be continuity when the switch is pushed, and no continuity when the switch is pushed again.

**CRUISE CONTROL MAIN SWITCH CONNECTOR**

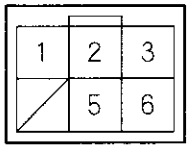


Terminal side of male terminal

3. Check for continuity between the No. 2 and No. 3 terminals. There should be continuity.

4. If a failure occurs between terminals No. 6 and No. 1, replace the cruise control main switch.

5. If a failure occurs between terminals No. 6 and No. 5, and between the No. 2 and No. 3, check the cruise control main switch indicator and illumination (see page 4-41).

## Main Switch/Indicator/Illumination Test

1. Turn the ignition switch ON (II). Turn the lighting switch and the cruise control main switch (A) ON.

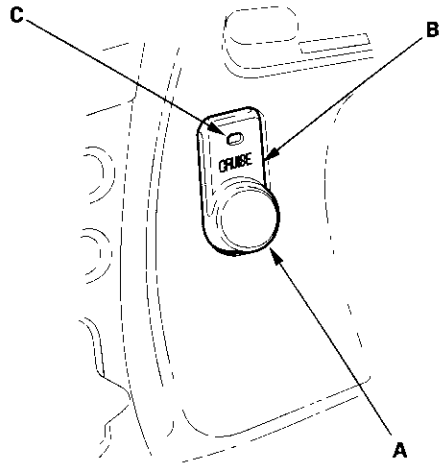


2. Check that the illumination indicator (B) and the indicator light (C) in the cruise control main switch come on.
3. If the indicator does not come on, remove the switch and replace the bulb.
4. If the indicator does not come on after the bulb has been replaced, replace the cruise control main switch.

## Main Switch/Indicator Bulb Replacement

1. Carefully pry the cruise control main switch (A) out of the instrument panel, then disconnect the connector from the switch.

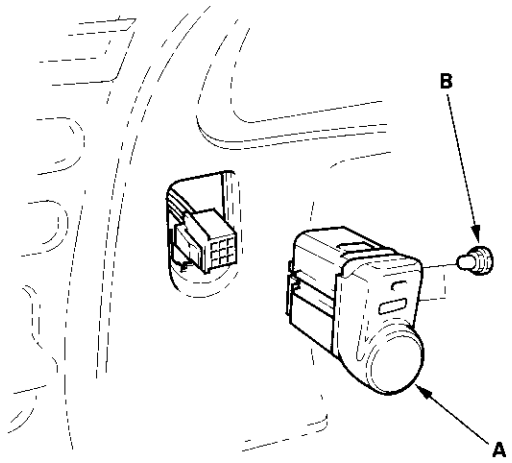


2. Replace the indicator bulb (B) or the switch, as need.

## Set/Resume Switch Test

1. Remove the two screws securing the set/resume switch, then remove the switch.

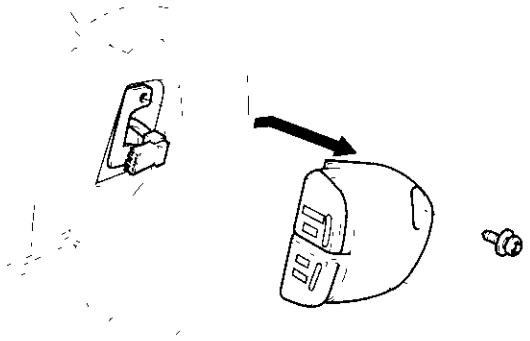

**SET/RESUME SWITCH CONNECTOR**

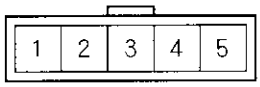


Terminal side of female terminals

2. Disconnect the connector from the switch.
3. Check the set switch for continuity between the No. 3 and No. 5 terminals of the connector. There should be continuity while pressing the switch down, and no continuity when the switch released.
4. Check the resume switch for continuity between the No. 1 and No. 3 terminals of the connector. There should be continuity while pressing the switch down, and no continuity when the switch released.
5. If either switch is faulty, replace the switch assembly.
6. If switch is OK, but switch failure is occurred on the cruise control unit input test, check and repair the wire harness on the switch circuit.

## Set/Resume Switch Replacement

1. Remove the two screws securing the set/resume switch, then remove the switch.

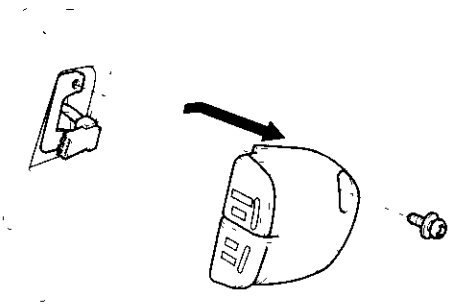

2. Disconnect the connector from the switch.
3. Replace the switch.

## Cruise Control Actuator Test

1. Disconnect the 4P connector from the cruise control actuator.

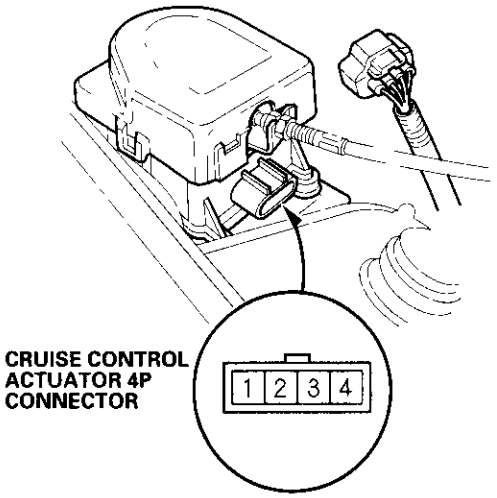


2. Remove the actuator cover.

3. Connect battery power to the No. 2 terminal of the 4P connector, and connect ground to the No. 1 terminal.

4. Check the magnetic clutch for proper engagement. A clicking sound should be heard and the output linkage should be locked.

5. If the output linkage is not locked, replace the cruise control actuator assembly.

6. With power and ground still connected as in step 3, connect battery power to the No. 4 terminal and ground to No. 3 terminal, and check that the output linkage starts to turn from full closed position and stops at full opened position by the motor in the actuator.

7. Reverse power and ground at connector terminals, No. 4 and No. 3, and check that the output linkage reverses and stops at the full closed position.

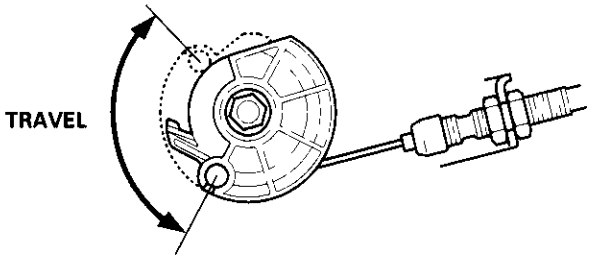


8. If the output linkage moves sluggishly, or the motor does not operate properly, replace the cruise control actuator assembly.

## Cruise Control Actuator Replacement

1. Remove the actuator cover, and disconnect the 4P connector from the cruise control actuator.

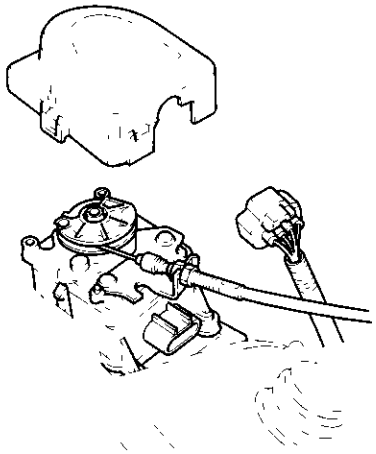

2. Disconnect the actuator cable end (A) from the output linkage (B), and remove the cable (C) from the cruise control actuator.

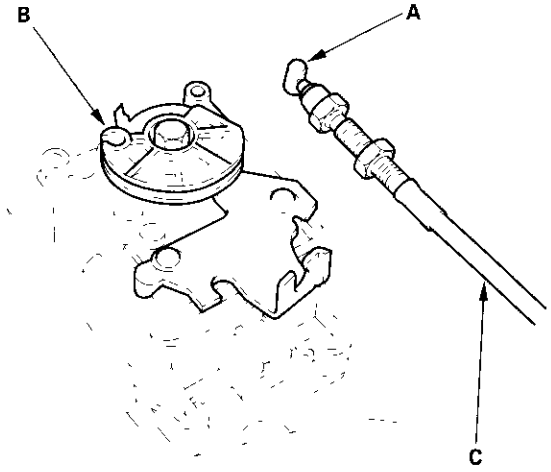


3. Remove the cruise control actuator assembly.

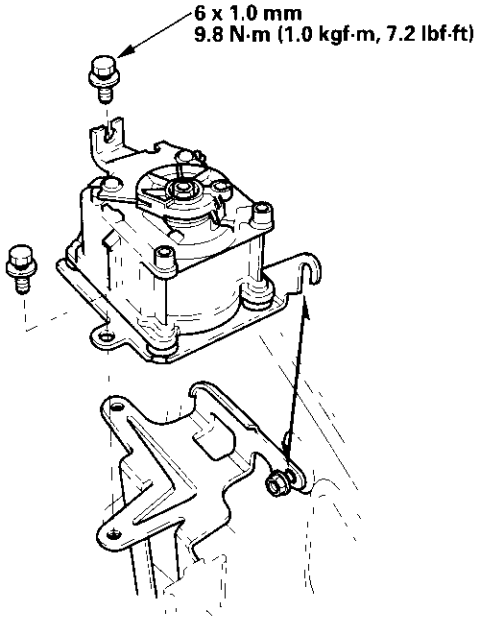


4. Replace the actuator, and install the new cruise control actuator in the reverse order of removal.

5. Adjust the actuator cable on the cruise control actuator side (see page 4-46).

## Actuator Cable Replacement

1. Remove the actuator cover, and disconnect the 4P connector from the cruise control actuator.

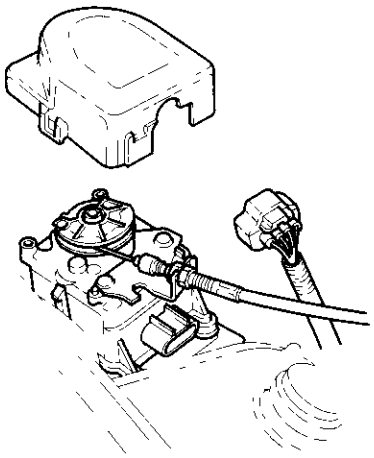

2. Disconnect the actuator cable end (A), and remove the cable (B) from the cruise control actuator.

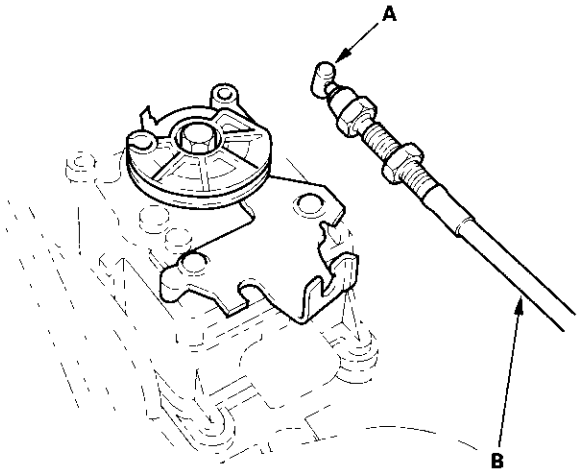


3. Remove the accelerator pedal assembly.

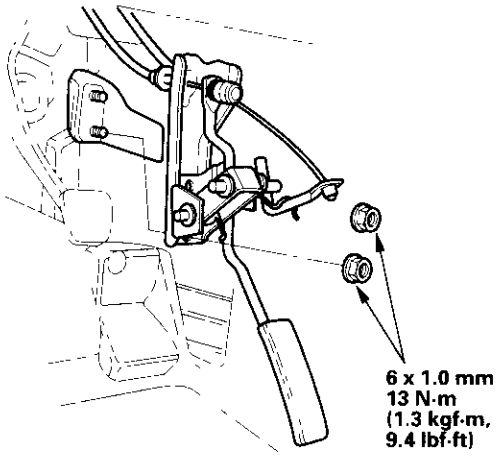


4. Disconnect the actuator cable end (A) from the arm (B) on the accelerator pedal assembly (C).

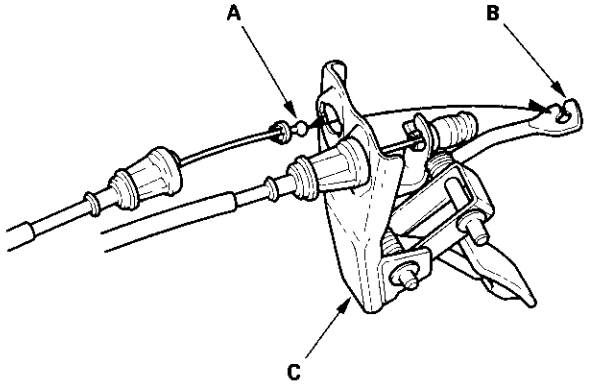


5. Replace the actuator cable, and install the new cable in the reverse order of removal.

6. Adjust the actuator cable on the cruise control actuator side (see page 4-46).

## Actuator Cable Adjustment

1. Hold the cable sheath, removing all slack from the throttle cable.
2. Turn the adjusting nut (A) until it is 3 mm (1/8 in.) away from the throttle cable bracket.

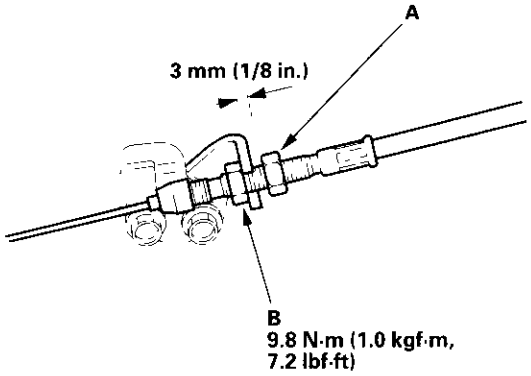


3. Tighten the locknut (B). The throttle cable deflection should now be 4–6 mm (0.16–0.24 in.).
4. Remove the actuator cover, then disconnect the actuator cable end from the cruise control actuator.

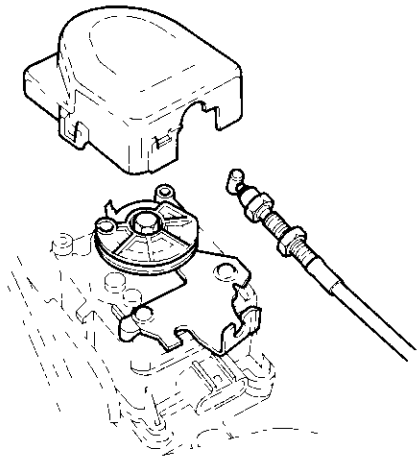

5. Turn the adjusting nut (A) until it is 9 mm (0.35 in.) away from the actuator cable bracket when the throttle linkage starts open.

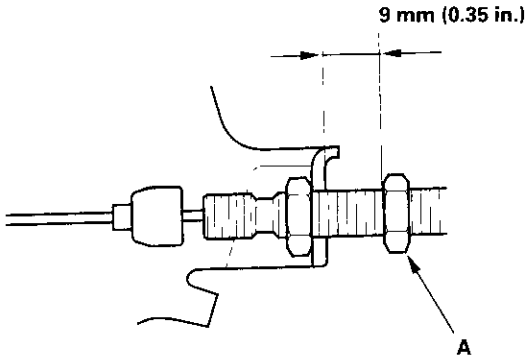


6. Pull the cable so that the adjusting nut (A) touches the bracket, and tighten the locknut (B).

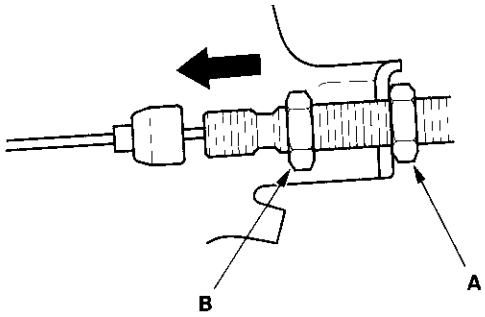


7. Verify that the throttle linkage starts open when the actuator cable is pulled 9 mm (0.35 in.) distance from the starting point by rotating the actuator linkage.

## Clutch Pedal Position Switch Test

1. Disconnect the connector from the clutch pedal position switch, then remove the switch.

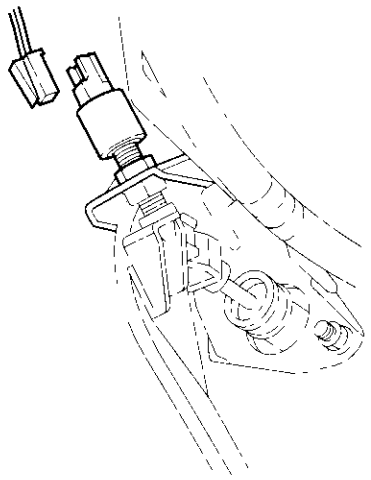

2. Check the clutch pedal position switch connector terminals for continuity. There should be continuity between the terminals with the button (A) released, and there should be continuity with the button pressed.

**CLUTCH PEDAL POSITION SWITCH CONNECTOR**

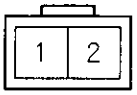


Terminal side of male terminals

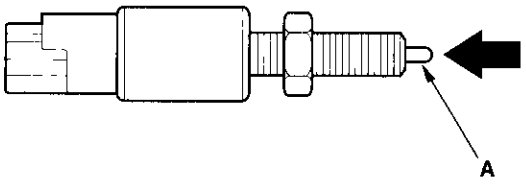


3. If the clutch pedal position switch is faulty, replace it.

4. Install the clutch pedal position switch, and adjust it (see page 12-4).

## Brake Pedal Position Switch Test

1. Disconnect the brake pedal position switch connector, and remove the switch.

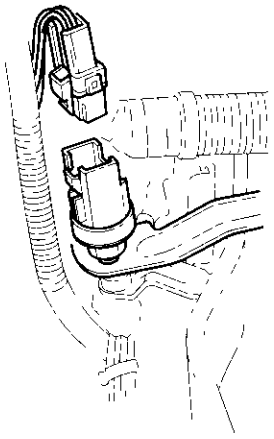

2. Check for continuity between the No. 1 and the No. 4 terminals of the brake pedal position switch connector. There should be continuity when the button (A) is pressed.

**BRAKE PEDAL POSITION SWITCH CONNECTOR**

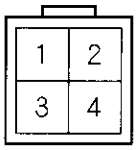


Terminal side of male terminals

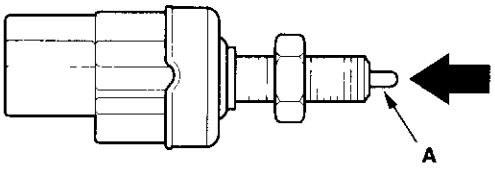


3. Check for continuity between the No. 2 and the No. 3 terminals. There should be continuity when the button is released.

4. If the brake pedal position switch is faulty, replace it.

5. Install the brake pedal position switch, and adjust it (see page 19-6).

# Engine Mechanical




**Engine Removal/Installation**

Engine Removal ..... 5-1

Engine Installation ..... 5-7

**Cylinder Head** ..... **6-1**

**Engine Block** ..... **7-1**

**Engine Lubrication** ..... **8-1**

**Intake Manifold/Exhaust System** ..... **9-1**

## Engine Removal

NOTE:
- Use fender covers to avoid damaging painted surfaces.
- To avoid damage, unplug the wiring connectors carefully while holding the connector portion.
- Mark all wiring and hoses to avoid misconnection. Also, be sure that they do not contact other wiring or hoses, or interfere with other parts.

1. Remove the hood support rod from the driver's side of the car, then use it as shown to fix the hood in a vertical position.

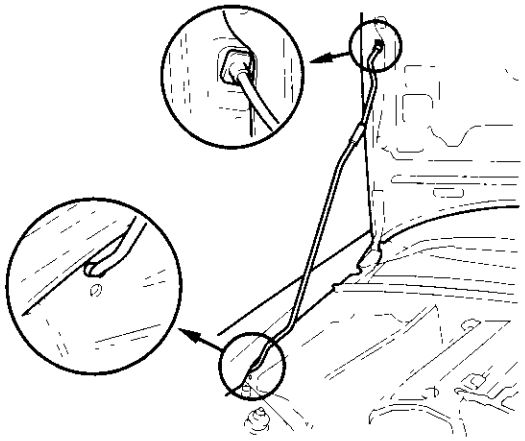

2. Make sure you have the anti-theft code for the radio, then write down the frequencies for the radio's preset buttons.

3. Disconnect the negative cable from the battery first, then disconnect the positive cable.

4. Remove the battery.

5. Remove the transmission (see page 13-5).

6. Disconect the engine control module (ECM) connectors (A) from the ECM.

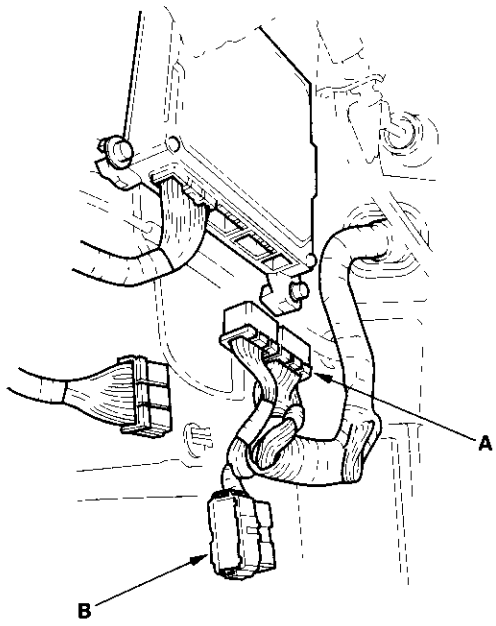


7. Disconnect the main wire harness connector (B).

8. Remove the vacuum tank.

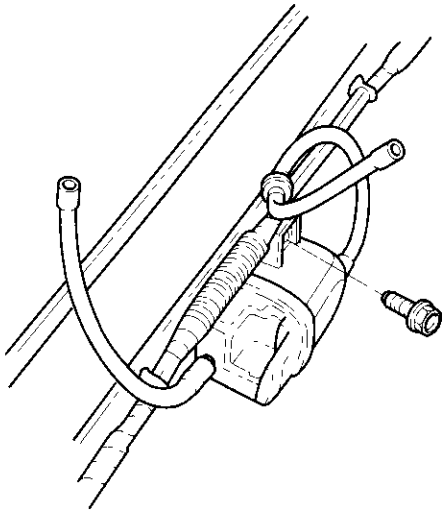

9. Remove the throttle cable (A) by loosening the locknut (B), then slipping the cable end out of the accelerator linkage. Take care not to bend the cable when removing it. Always replace any kinked cable with a new one.

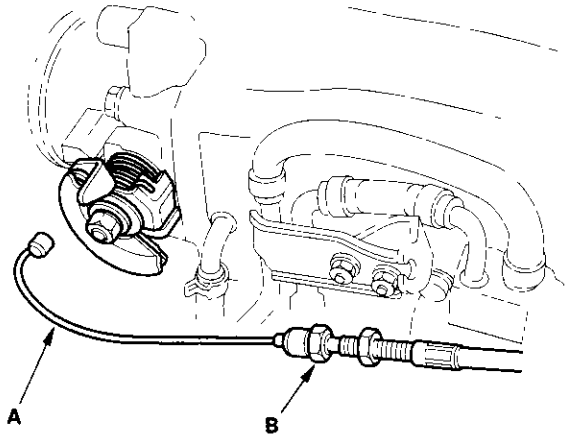


10. Remove the four bolts (A) securing the electrical power steering (EPS) control unit (B).

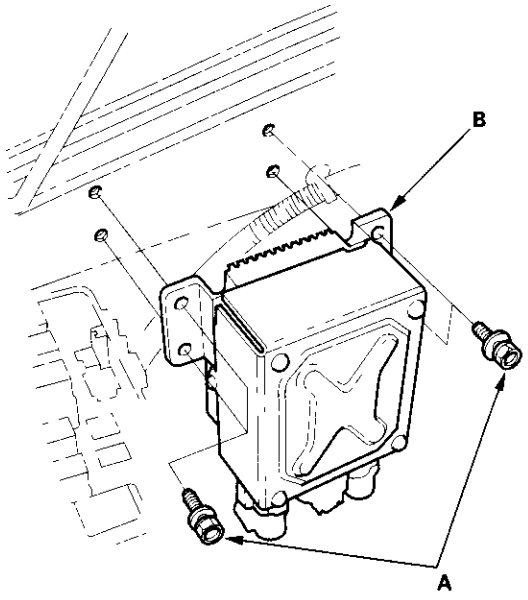


11. Remove the battery cable (A) from the main under-hood fuse/relay box, then remove the harness clamps (B).

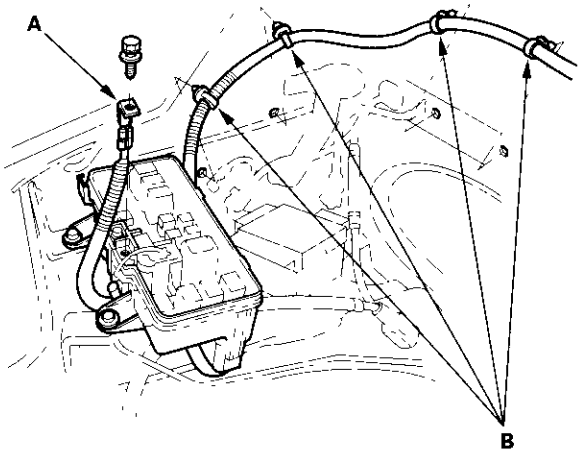


12. Remove the battery cable (A) from the auxiliary under-hood fuse box, and remove the ground cable (B) and harness clamps (C).

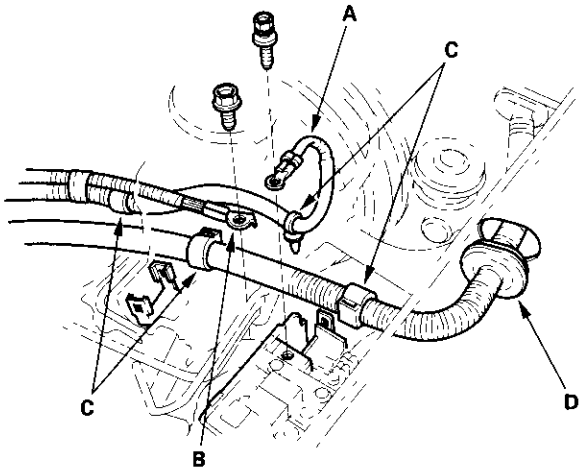


13. Remove the grommet (D), then pull out the ECM connectors.

(cont'd)

## Engine Removal (cont'd)

14. Relieve the fuel pressure (see page 11-105).

15. Remove the fuel feed hose (A), fuel return hose (B) and brake booster vacuum hose (C).

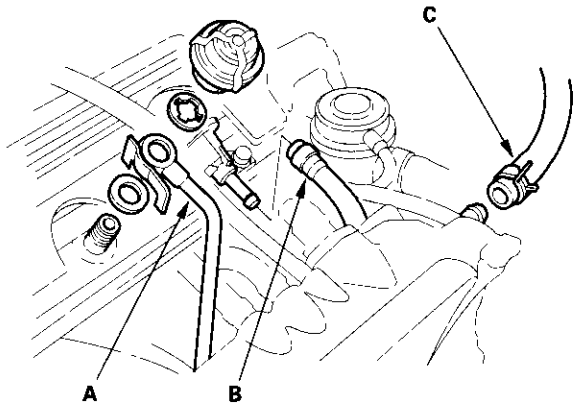


16. Remove the evaporative emission (EVAP) canister hose.

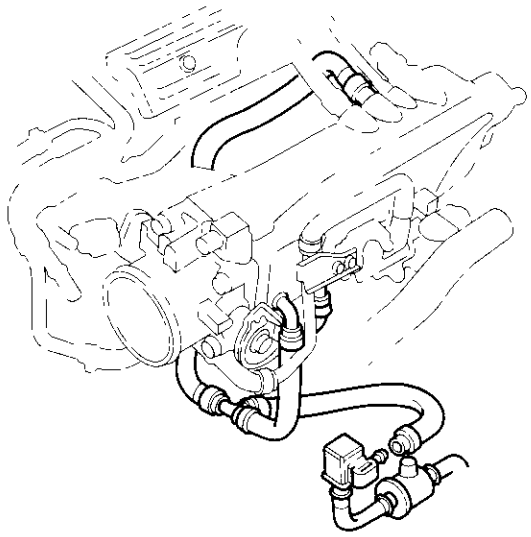

17. Remove the two bolts securing the engine stop bracket.

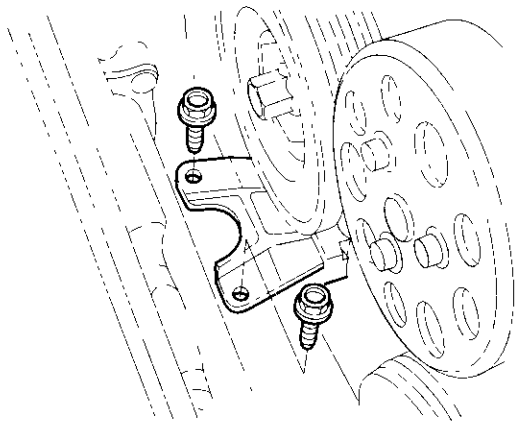

18. Remove the radiator cap.

19. Raise the hoist to full height.

20. Remove the front tires/wheels.

21. Loosen the drain plug in the radiator, and drain the engine coolant (see page 10-8).

22. Drain the engine oil. Reinstall the drain bolt using a new washer (see page 8-5).

23. Remove the engine stop bracket cushion (A), then remove the engine stop bracket (B).

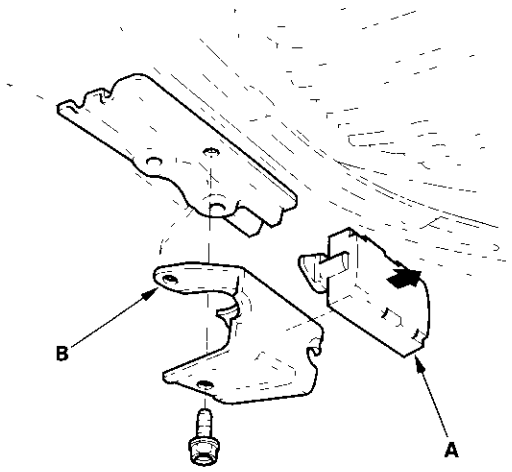


24. Lower the hoist.

25. Remove the heater hoses (A) and lower radiator hose (B).

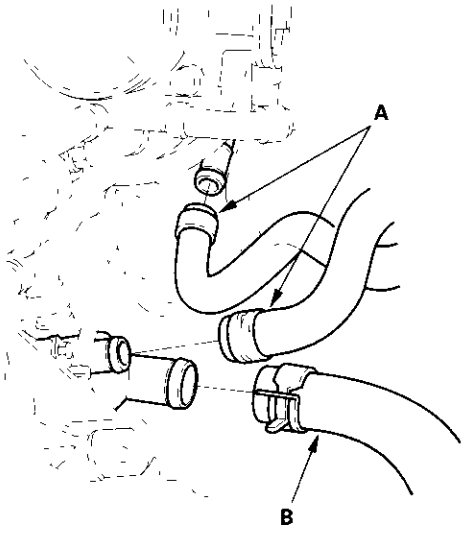


26. Remove the upper radiator hose.

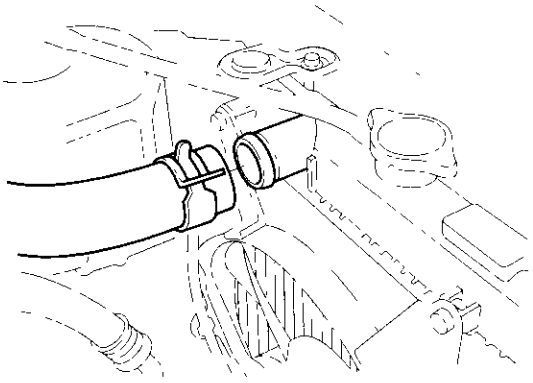

(cont'd)

## Engine Removal (cont'd)

27. Attach the chain hoist to the engine as shown. Take care not to damage the VTEC solenoid valve.

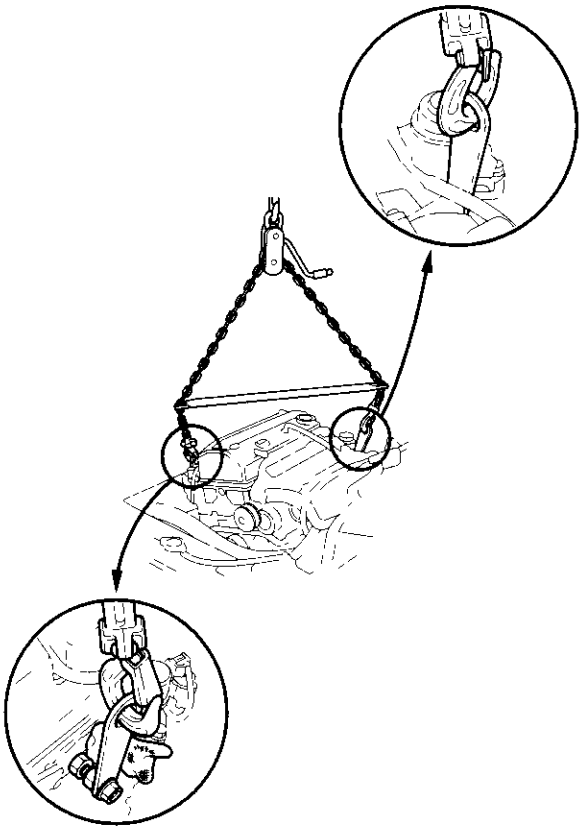

28. Remove the support nut from the left side engine mount bracket.

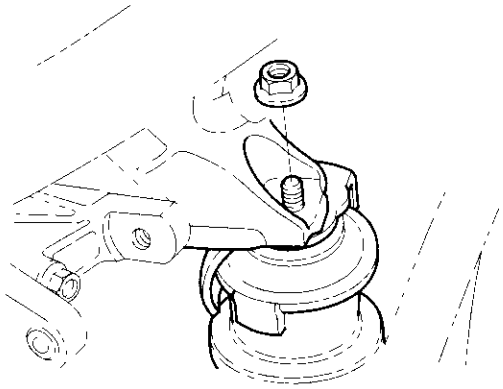

29. Remove the support nut (A) and four mounting bolts (B), then remove the right side engine mount bracket (C).

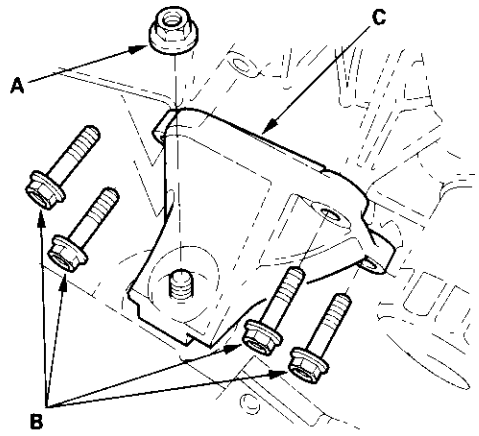


30. Check that the engine is completely free of vacuum hoses, fuel and coolant hoses, and electrical wiring.

31. Slowly raise the engine about 150 mm (6 in.). Check once again that all hoses and wires are disconnected from the engine.

32. Raise the engine all the way, and remove it from the vehicle.

## Engine Installation

1. Install the accessory brackets, and tighten their bolts to the specified torques.

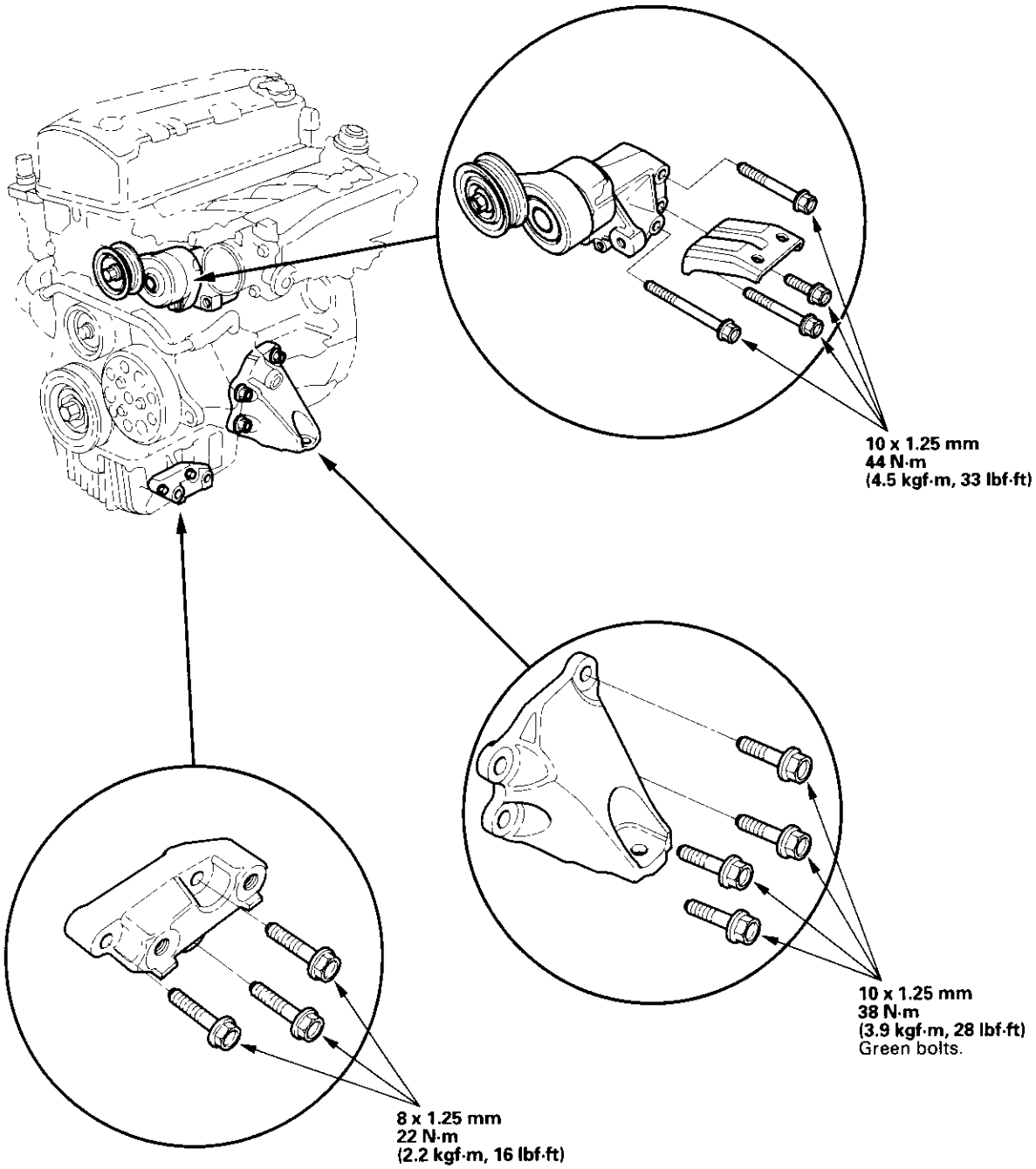


(cont'd)

## Engine Installation (cont'd)

2. Install the engine into position in the vehicle.

**NOTICE**
Reinstall the mounting bolts/support nuts in the sequence given. Failure to follow this sequence may cause excessive noise and vibration, and reduce bushing life.

3. Install the right side engine mount bracket, then tighten the bolts and nut in the numbered sequence shown.

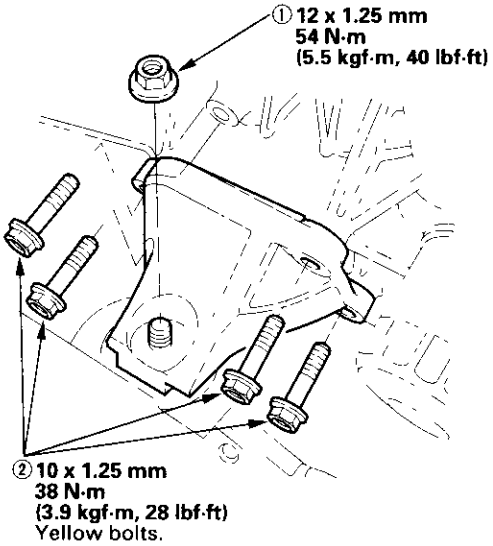


4. Tighten the support nut on the left side engine mount bracket.

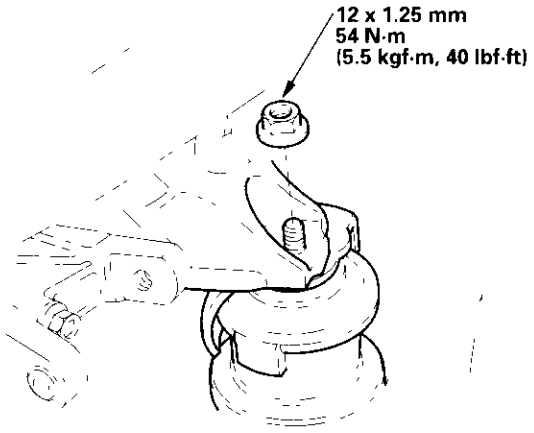


5. Install the upper radiator hose.

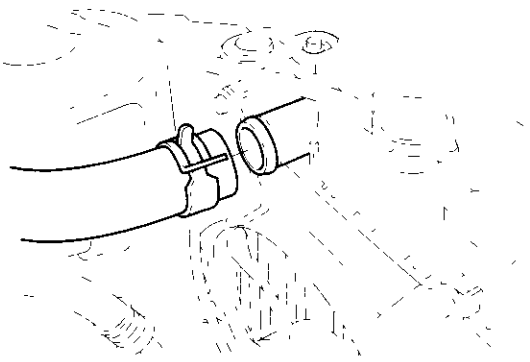

6. Install the heater hoses (A) and lower radiator hose (B).

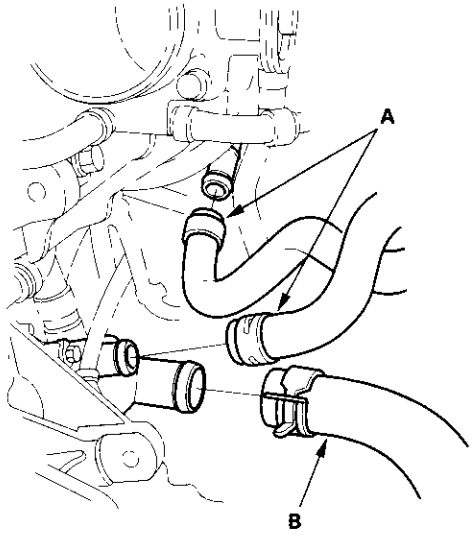


7. Raise the hoist to full height.

8. Install the engine stop bracket (A), then install the engine stop bracket cushion (B).

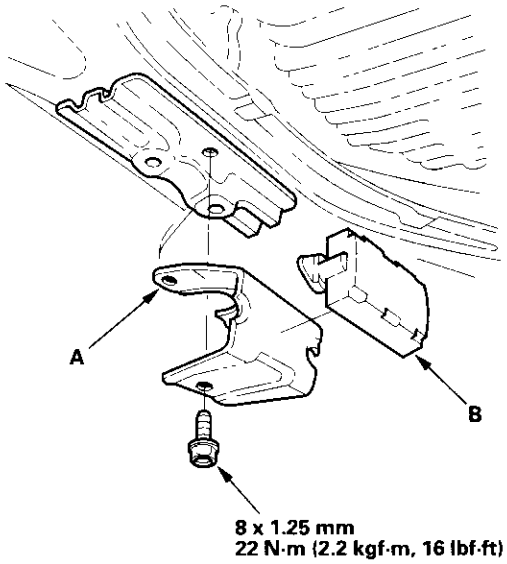


9. Install the front tires/wheels.

10. Lower the hoist.

11. Tighten the two bolts securing the engine stop bracket.

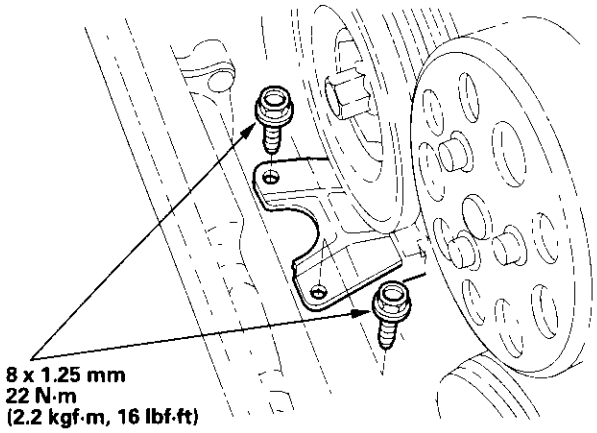


12. Install the evaporative emission (EVAP) canister hose.

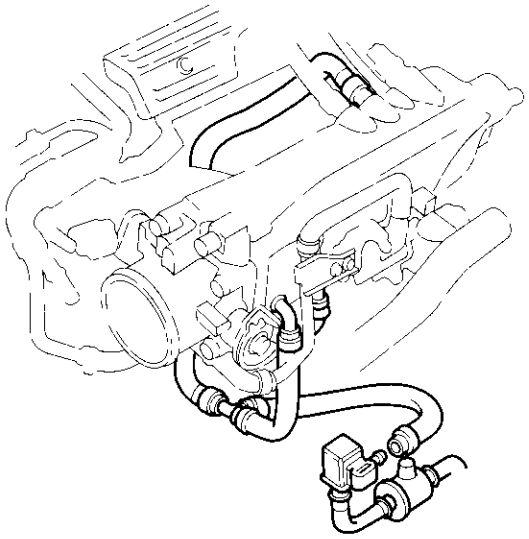

(cont'd)

## Engine Installation (cont'd)

13. Install the brake booster vacuum hose (A), fuel return hose (B) and fuel feed hose (C), using new washers (D).

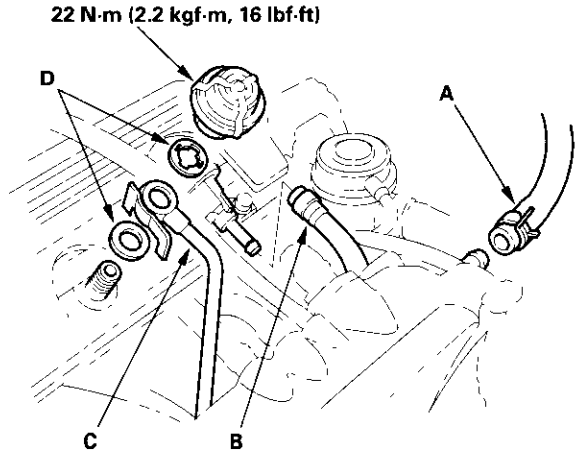


14. Push the engine control module (ECM) connectors through the bulkhead, then install the grommet (A).

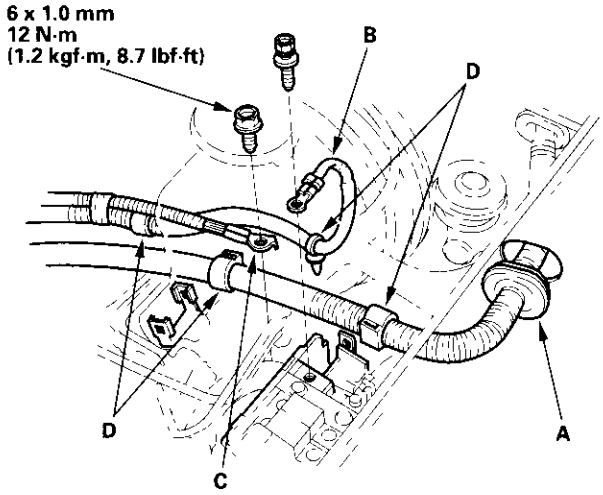


15. Install the battery cable (B) on the auxiliary under-hood fuse box. Install the ground cable (C) and harness clamps (D).

16. Connect the ECM connectors (A) and main wire harness connector (B).

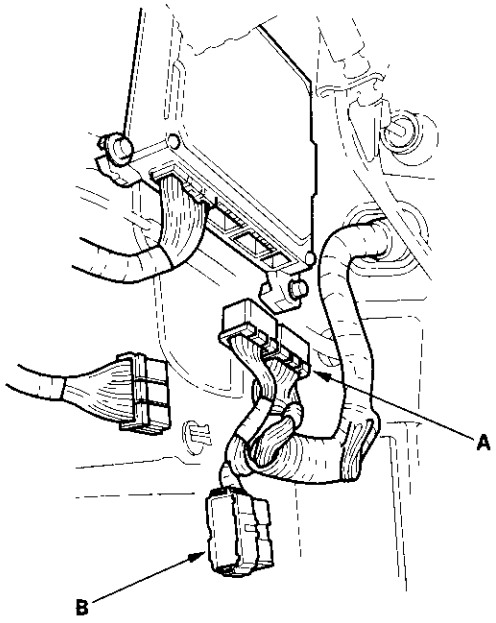


17. Install the harness clamps (A), then install the battery cable (B) on the main under-hood fuse/relay box.

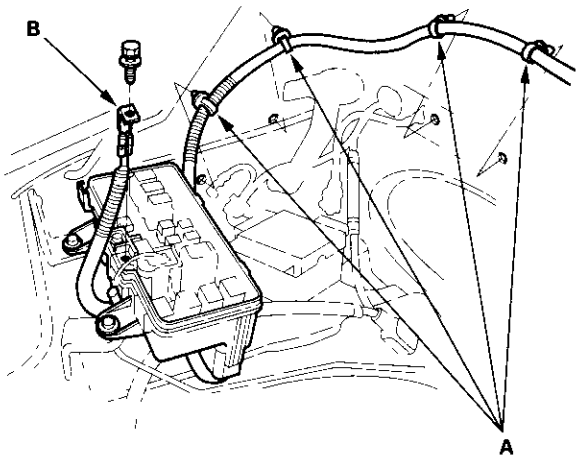

18. Install the electrical power steering (EPS) control unit.

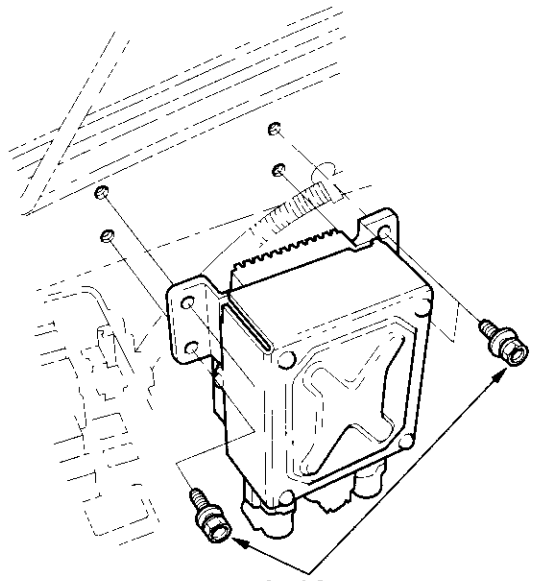


19. Install the vacuum tank.

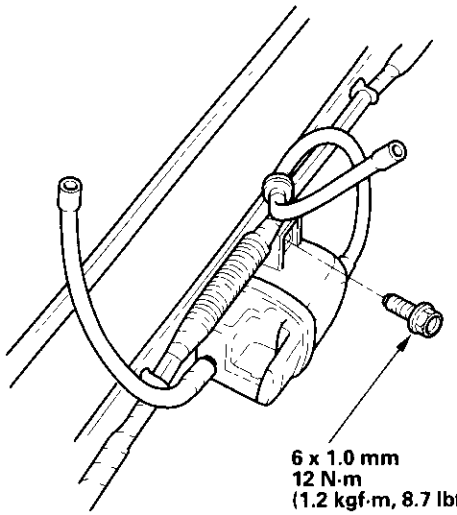


20. Install the throttle cable (see page 11-125), then adjust the cable (see page 11-124).

21. Install the transmision (see page 13-66).

22. Clean the battery posts and cable terminals with sandpaper, then assemble them and apply grease to prevent corrosion.

23. Refill the engine with engine oil (see page 8-5).

24. Refill the radiator with engine coolant, and bleed air from the cooling system with the heater valve open (see page 10-8).

25. Check that the transmission shifts into gear smoothly.

26. Inspect for fuel leaks. Turn the ignition switch ON (II) (do not operate the starter) so that the fuel pump runs for about 2 seconds and pressurizes the fuel line. Repeat this operation two or three times, then check for fuel leakage at any point in the fuel line.

27. Perform the engine control module (ECM) idle learn procedure (see page 11-100).

28. Inspect the idle speed (see page 11-100).

29. Inspect the ignition timing (see page 4-18).

30. Enter the anti-theft code for the radio, then enter the customer's radio station presets.

31. Set the clock.

# Engine Mechanical

## Cylinder Head


Special Tools ..... 6-2
Component Location Index ..... 6-3
DTC Troubleshooting ..... 6-6
VTEC Solenoid Valve Test ..... 6-9
VTEC Rocker Arms Test ..... 6-10
Valve Clearance Adjustment ..... 6-12
Crankshaft Pulley Removal and Installation ..... 6-14
Cam Chain Removal ..... 6-15
Cam Chain Installation ..... 6-19
Chain Case Oil Seal Installation ..... 6-24
Cylinder Head Removal ..... 6-25
Camshaft Gear Removal ..... 6-31
Cylinder Head Inspection for Warpage ..... 6-32
Rocker Arms and Shafts Disassembly/Reassembly . 6-33
Rocker Arms and Shafts Inspection ..... 6-34
Camshaft Inspection ..... 6-36
Valves, Springs, and Valve Seals Removal ..... 6-38
Valve Inspection ..... 6-39
Valve Stem-to-Guide Clearance Inspection ..... 6-39
Valve Guide Replacement ..... 6-40
Valve Seat Reconditioning ..... 6-42
Valves, Springs, and Valve Seals Installation ..... 6-44
Camshaft Gear Installation ..... 6-45
Cylinder Head Installation ..... 6-45
Cylinder Head Cover Installation ..... 6-53

## Special Tools

| Ref.No. | Tool Number | Description | Qty |
|---|---|---|---|
| ① | 07HAH-PJ7010B | Valve Guide Reamer, 5.5 mm | 1 |
| ② | 07JAA-001020A | Socket, 19 mm | 1 |
| ③ | 07JAB-001020A | Holder Handle | 1 |
| ④ | 07JAB-001040A | Holder Attachment, 50 mm | 1 |
| ⑤ | 07LAK-PR30100 | Gauge Joint Adapter | 1 |
| ⑥ | 07NAJ-P07010A | Pressure Gauge Adaptor | 1 |
| ⑦-1 | 07406-0020201 | A/T Pressure Hose | 1 |
| ⑦-2 | 07406-0070300 | A/T Low Pressure Gauge W/Panel | 1 |
| ⑦-3 | 07MAJ-PY4011A | A/T Pressure Hose, 2,210 mm | 1 |
| ⑦-4 | 07MAJ-PY40120 | A/T Pressure Hose Adaptor | 1 |
| ⑧ | 07ZAJ-PNAA100 | VTEC Air Adapter | 2 |
| ⑨ | 07742-0010100 | Valve Guide Driver, 5.5 mm | 1 |
| ⑩ | 07746-0010400 | Attachment, 52x55 mm | 1 |
| ⑪ | 07749-0010000 | Driver | 1 |
| ⑫ | 07757-PJ1010A | Valve Spring Compressor Attachment | 1 |



①

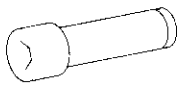

②

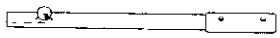

③

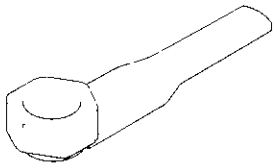

④

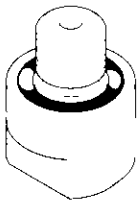

⑤

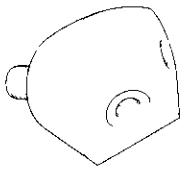

⑥

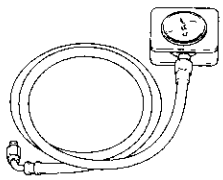

⑦

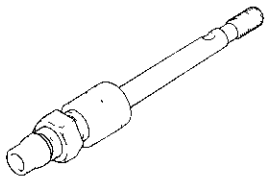

⑧

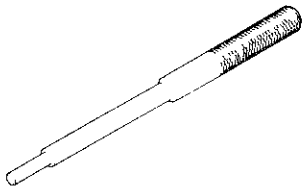

⑨

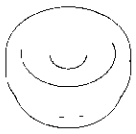

⑩

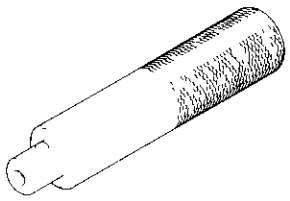

⑪

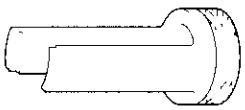

⑫

## Component Location Index

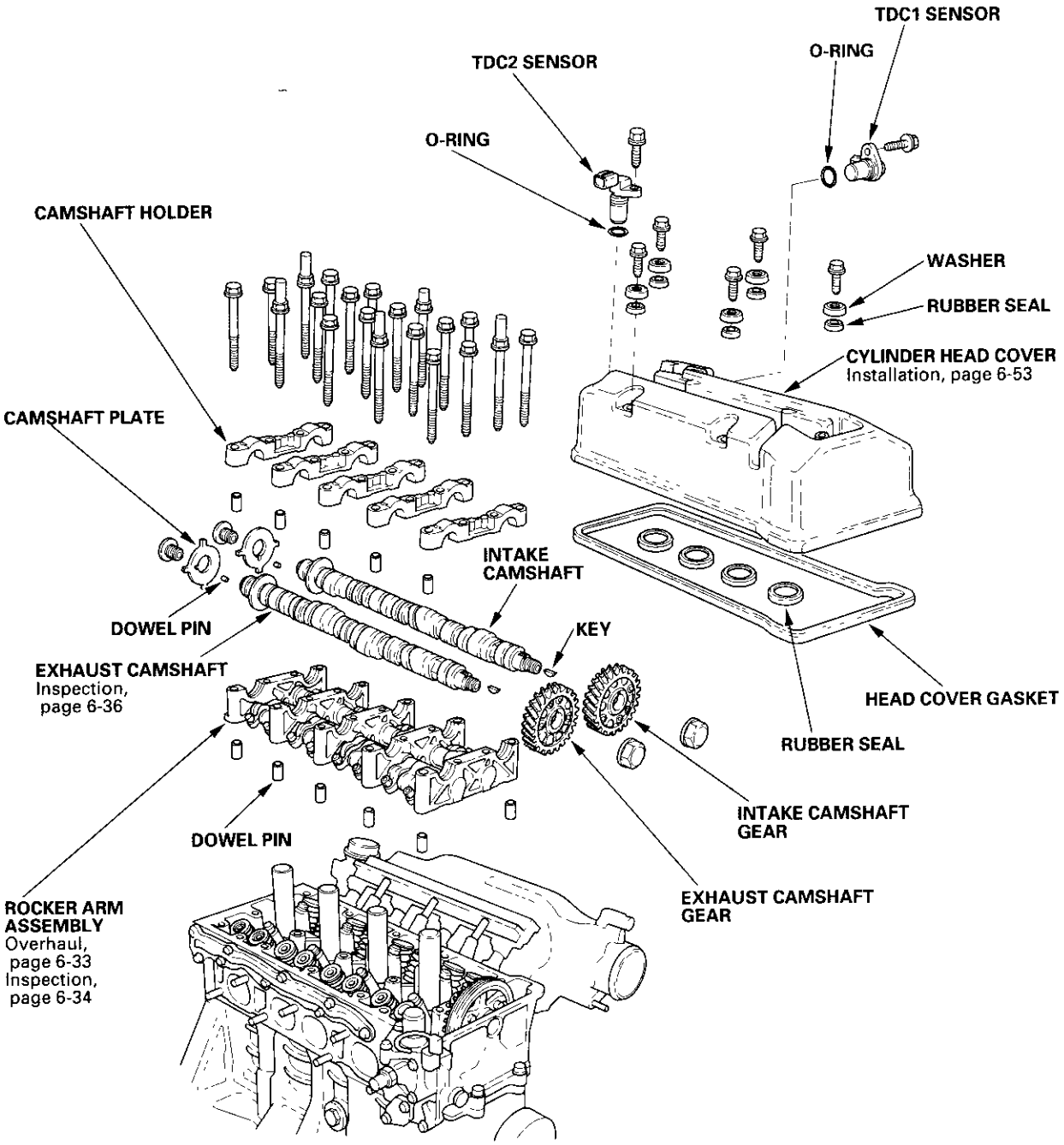


(cont'd)

## Component Location Index (cont'd)

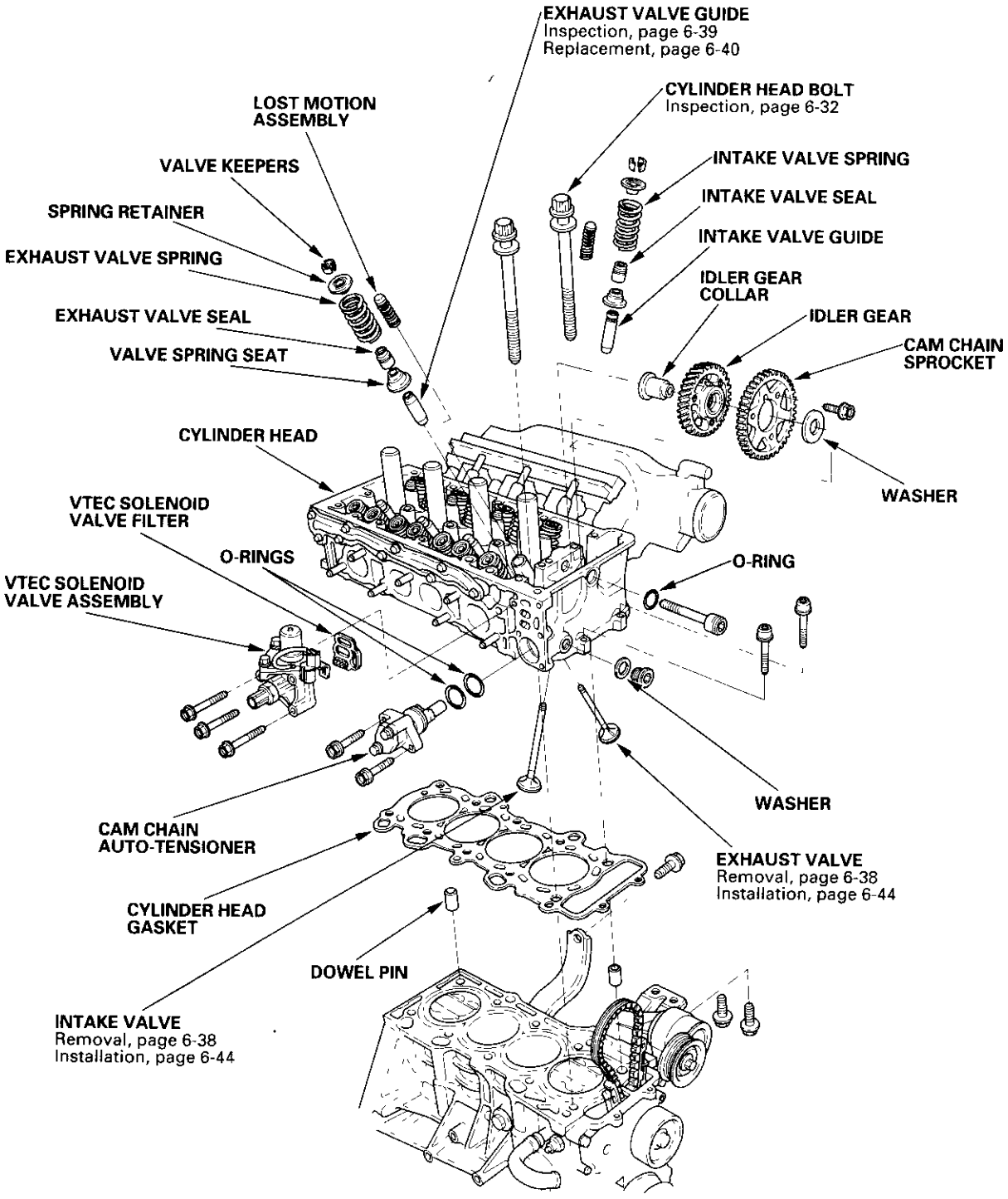

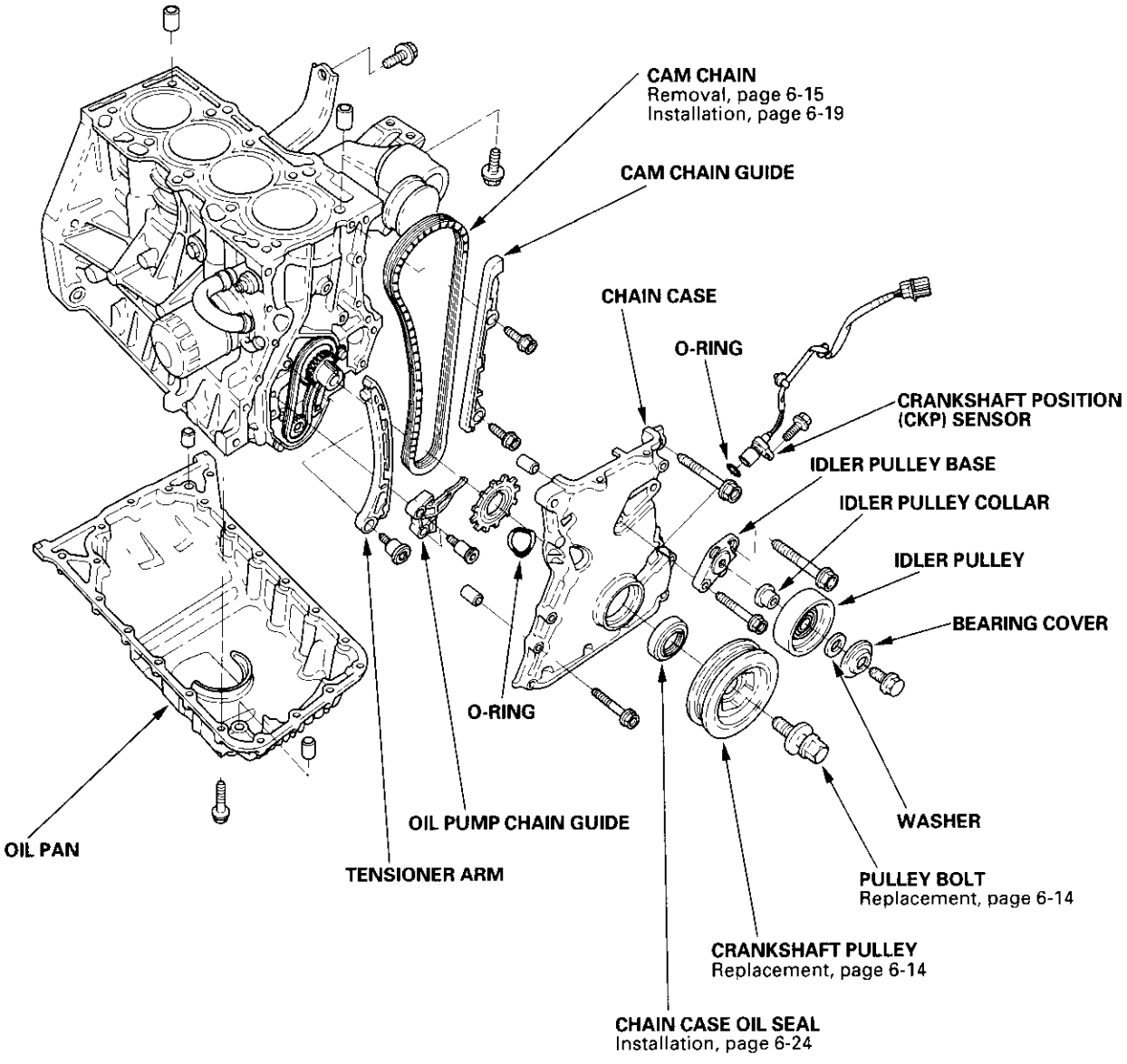
CAM CHAIN
Removal, page 6-15
Installation, page 6-19
CAM CHAIN GUIDE
CHAIN CASE
O-RING
CRANKSHAFT POSITION (CKP) SENSOR
IDLER PULLEY BASE
IDLER PULLEY COLLAR
IDLER PULLEY
BEARING COVER
O-RING
OIL PAN
OIL PUMP CHAIN GUIDE
TENSIONER ARM
WASHER
PULLEY BOLT
Replacement, page 6-14
CRANKSHAFT PULLEY
Replacement, page 6-14
CHAIN CASE OIL SEAL
Installation, page 6-24

## DTC Troubleshooting

**DTC P1259:** A problem in the VTEC Oil Pressure Switch circuit or VTEC Solenoid Valve circuit.

**Special Tools Required**
- Pressure gauge adaptor 07NAJ-P07010A
- A/T low pressure gauge w/panel 07406-0070300
- A/T pressure hose 07406-0020201
- A/T pressure hose, 2,210 mm 07MAJ-PY4011A
- A/T pressure adaptor 07MAJ-PY40120

1. Reset the engine control module (ECM) (see page 11-4).
2. Check the engine oil level, and refill if necessary. Start the engine.
3. Warm up the engine to normal operating temperature (cooling fan comes on).
4. Road test the vehicle:
   Accelerate in 1st gear to an engine speed over 6,000 rpm. Hold that engine speed for at least 2 seconds. If DTC P1259 is not repeated during the first road test, repeat this test two more times.

   *Is DTC P1259 indicated?*

   **YES** – Go to step 5.

   **NO** - Intermittent failure, system is OK at this time. Check for poor connections or loose wires at VTEC solenoid valve and ECM. ■
5. Turn the ignition switch OFF.
6. Disconnect the VTEC oil pressure switch 2P connector.
7. Check for continuity on the VTEC oil pressure switch between the pressure switch 2P connector terminals No. 1 and No. 2.

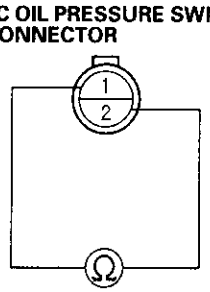

Terminal side of male terminals

   *Is there continuity?*

   **YES** – Go to step 8.

   **NO** – Replace the VTEC oil pressure switch. ■
8. Turn the ignition switch ON (II).
9. Measure the voltage between the VTEC oil pressure switch harness 2P connector terminal No. 1 and body ground.

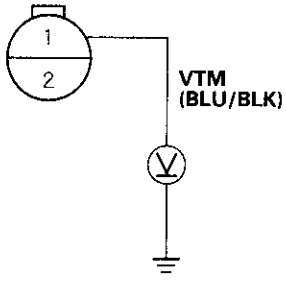

Wire side of female terminals

   *Is there battery voltage?*

   **YES** – Go to step 10.

   **NO** – Inspect for an open or short to ground in the wire between the VTEC oil pressure switch and the ECM (C10). If the wire is OK, substitute a known-good ECM and recheck. ■

10. Measure voltage across the VTEC oil pressure switch harness 2P connector.

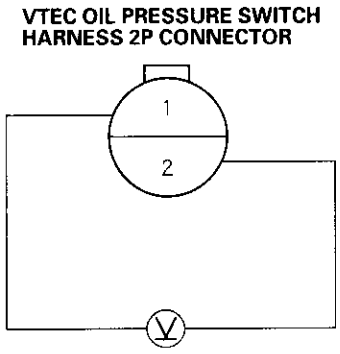


Wire side of female terminals

*Is there battery voltage?*

**YES** – Go to step 11.

**NO** – Repair an open in the wire between the VTEC oil pressure switch and G101. ■

11. Turn the ignition switch OFF.

12. Disconnect the VTEC solenoid valve 1P connector.

13. Check for continuity on the VTEC solenoid valve between the solenoid valve 1P connector terminal and body ground.

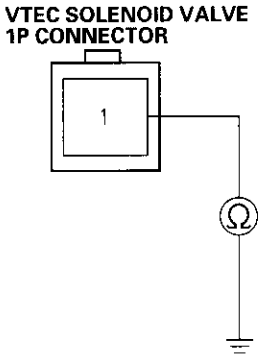


Terminal side of male terminal

*Is there 14 - 30 Ω ?*

**YES** – Go to step 14.

**NO** – Replace the VTEC solenoid valve. ■

14. Remove the VTEC oil pressure switch (A) and install the special tools as shown, then reinstall the VTEC oil pressure switch.

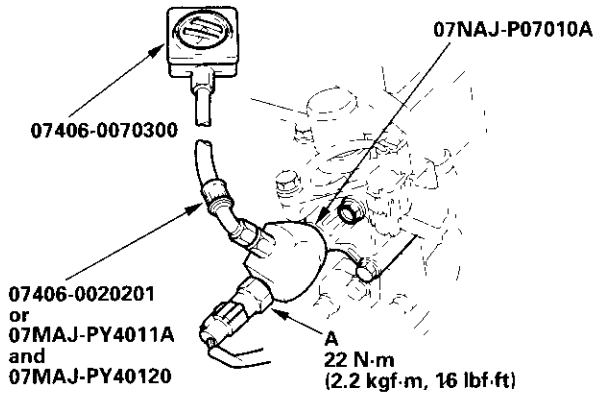


15. Reconnect the VTEC solenoid valve 1P connector and VTEC oil pressure switch 2P connector.

16. Connect a tachometer.

17. Warm up the engine to normal operating temperature (cooling fan comes on).

18. Check oil pressure at engine speeds of 1,000, 2,000 and 5,000 rpm. Keep measuring time as short as possible because the engine is running with no load (less than 1 minute).

*Is pressure below 49 kPa (0.5 kgf/cm², 7 psi)?*

**YES** – Go to step 19.

**NO** – Inspect the VTEC solenoid valve (see page 6-9). ■

19. Turn the ignition switch OFF.

20. Disconnect the VTEC solenoid valve 1P connector.

21. Attach the battery positive cable to the VTEC solenoid valve terminal.

22. Start the engine and check oil pressure at an engine speed of 5,000 rpm.

*Is pressure above 390 kPa (4.0 kgf/cm², 57 psi)?*

**YES** – Go to step 23.

**NO** – Inspect the VTEC solenoid valve (see page 6-9). ■

(cont'd)

## DTC Troubleshooting (cont'd)

23. With the battery positive terminal still connected to the VTEC solenoid valve, measure voltage between C10 and body ground.

ECM CONNECTOR C (13P)

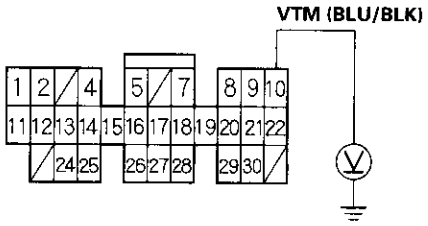


Wire side of female terminals

*Is there battery voltage above 5,000 rpm?*

**YES** – Go to step 24.

**NO** – Replace the VTEC pressure switch. ■

24. Turn the ignition switch OFF.

25. Disconnect the battery positive cable from the VTEC solenoid valve terminal.

26. Check for continuity between the VTEC solenoid valve harness 1P connector terminal and the ECM connector terminal B12.

VTEC SOLENOID VALVE HARNESS
1P CONNECTOR

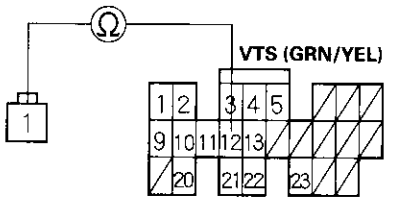


ECM CONNECTOR B (25 P)

Wire side of female terminals

*Is there continuity?*

**YES** Go to step 27.

**NO** – Repair an open in the wire between the ECM (B12) and VTEC solenoid valve connector. ■

27. Check for continuity between the VTEC solenoid valve 1P connector terminal and body ground.

VTEC SOLENOID VALVE HARNESS
1P CONNECTOR

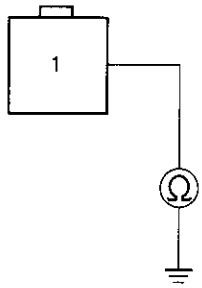


Wire side of female terminal

*Is there continuity?*

**YES** – Repair a short in the wire between the ECM (B12) and VTEC solenoid valve connector. ■

**NO** – Substitute a known-good ECM and recheck (see page 11-5). If symptom/indication goes away, replace the original ECM (see page 11-4). ■

## VTEC Solenoid Valve Test

1. Disconnect the 1P connector from the VTEC solenoid valve.

2. Measure resistance between the terminal and body ground.

   **Resistance: 14 30 Ω**

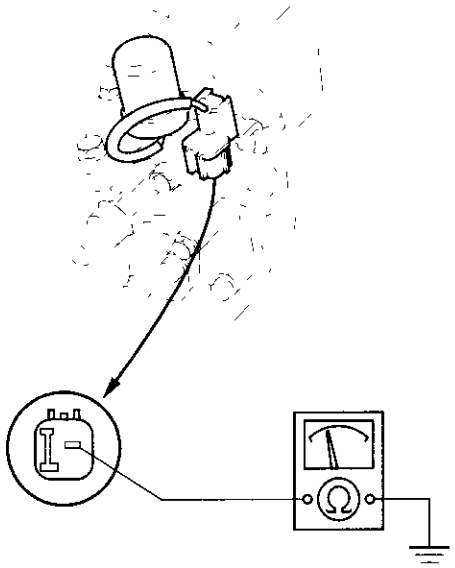

3. If the resistance is within specifications, remove the VTEC solenoid valve assembly (A) from the cylinder head, and check the VTEC solenoid valve filter (B) for clogging. If there is clogging, replace the engine oil filter, VTEC solenoid valve filter, and the engine oil.

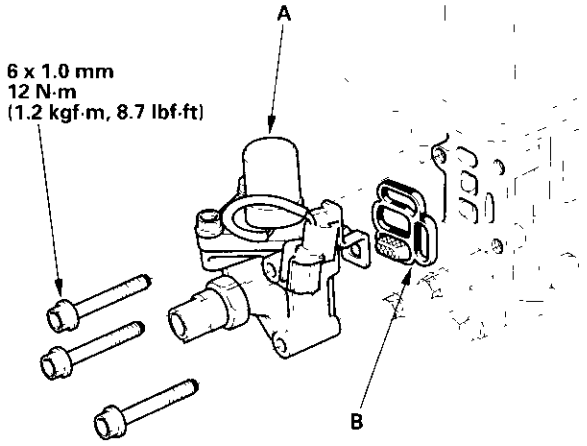


4. If the filter is not clogged, push the VTEC solenoid valve with your finger and check its movement. If the VTEC solenoid valve is normal, check the engine oil pressure.

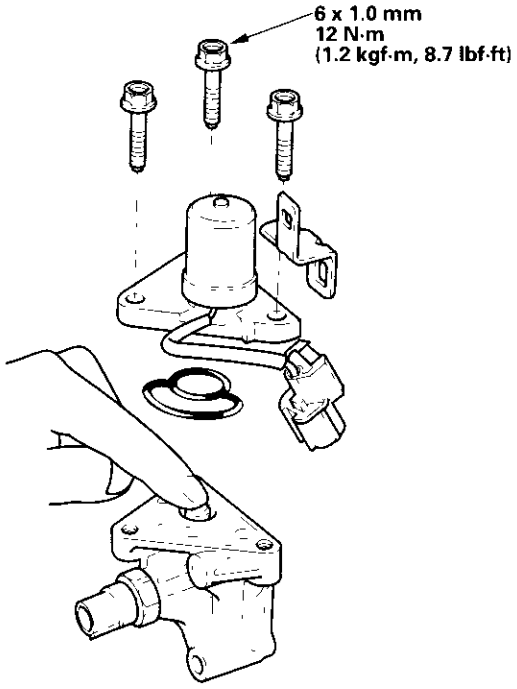

## VTEC Rocker Arms Test

**Special Tools Required**
- Gauge joint adapter 07LAK-PR30100
- VTEC air adapter 07ZAJ-PNAA100

1. Remove the cylinder head cover.
2. Set the No. 1 piston at top dead center (TDC) (see step 2 on page 6-12).
3. Move the secondary rocker arm (A) for No. 1 cylinder. The secondary rocker arm should move independently of the mid rocker arm (B).
   - If the secondary rocker arm does not move, remove the mid, primary and secondary rocker arms as an assembly, and check that the pistons in the mid and primary rocker arms move smoothly.
   - If any rocker arm needs replacing, replace the mid, primary and secondary rocker arms as an assembly.

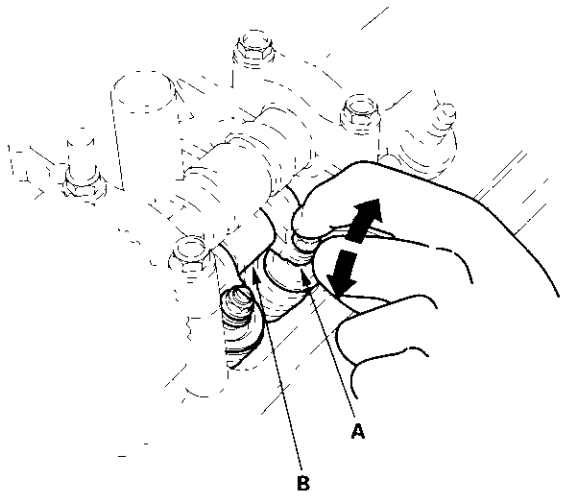


4. Check that the air pressure on the shop air compressor gauge indicator is over 400 kPa (4 kgf/cm², 57 psi). Make sure no water in the air hose and air compressor tank.
5. Inspect the valve clearance (see page 6-12).
6. Remove the No. 3 and No. 4 camshaft holder bolts, and install the VTEC air adapters (A) finger-tight.

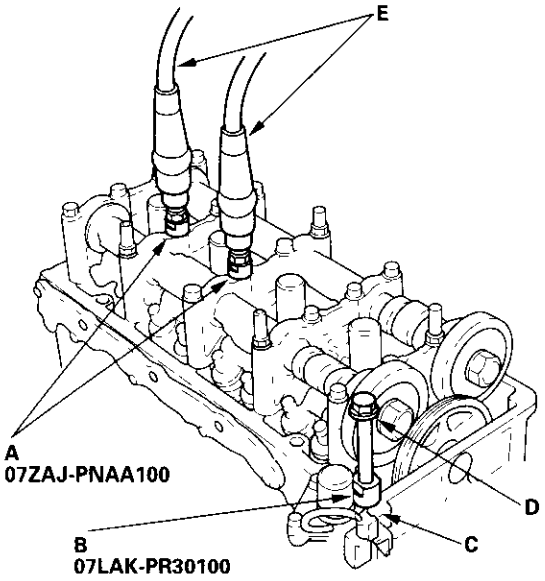


7. Install the gauge joint adapter (B) to the inspection hole (C), then install the 8 x 1.25 mm bolt (D) to the gauge joint adapter.
8. Connect the two air hoses (E) to each VTEC air adapters.

9. With the specified air pressure applied and the piston at TDC, move the secondary rocker arm (A). The mid rocker arm (B), primary rocker arm (C) and secondary rocker arm should move together. If the three rocker arms do not move together, replace the rocker arms as a set.

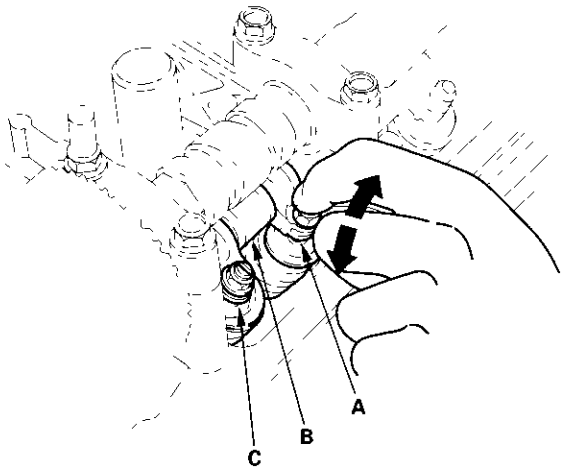


10. Remove the special tools.

11. Tighten the camshaft holder bolts to 22 N·m (2.2 kgf·m, 16 lbf·ft).

12. Install the cylinder head cover (see page 6-53).

## Valve Clearance Adjustment

NOTE: Adjust the valves only when the cylinder head temperature is less than 100°F (38°C).

1. Remove the cylinder head cover.
2. Set the No. 1 piston at top dead center (TDC). The TDC marks (A) on the cam chain sprocket should align with the cylinder head surface.

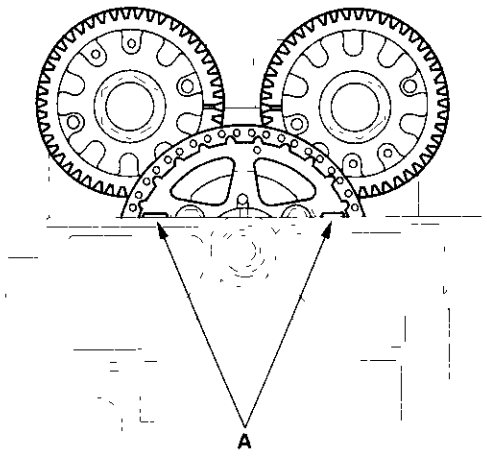


3. Select the correct thickness feeler gauge for the valves you're going to check.

**Intake: 0.21-0.25 mm (0.008-0.010 in.)**
**Exhaust: 0.25-0.29 mm (0.010-0.011 in.)**
**Adjusting screw location:**

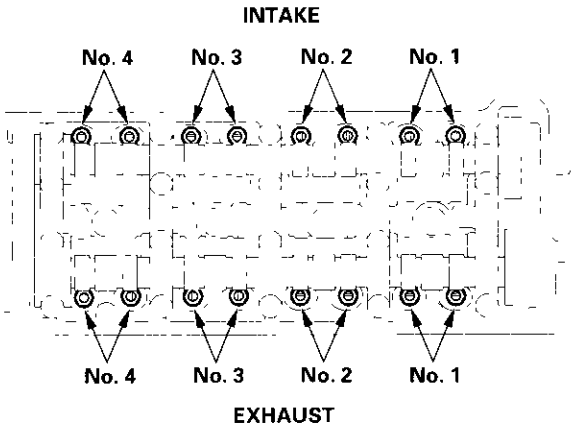


4. Insert the feeler gauge (A) between the adjusting screw and the end of the valve stem and slide it back and forth; you should feel a slight amount of drag.

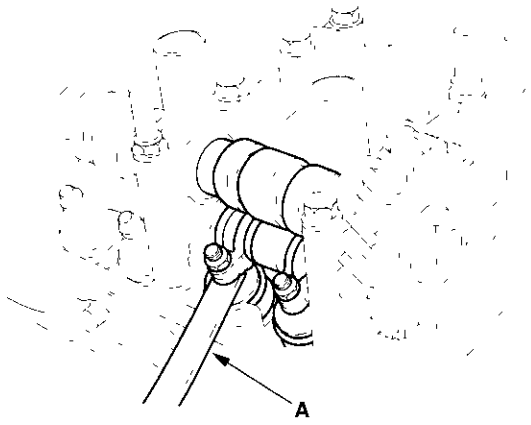


5. If you feel too much or too little drag, loosen the locknut (A), and turn the adjusting screw (B) until the drag on the feeler gauge is correct.

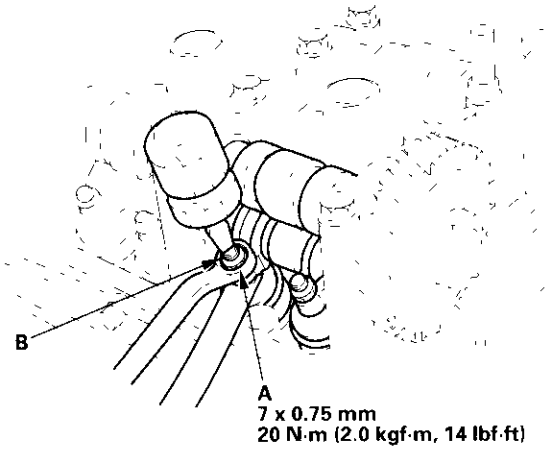


6. Tighten the locknut and recheck the clearance. Repeat the adjustment, if necessary.

7. Rotate the crankshaft 180° clockwise (camshaft gears turn 90°)

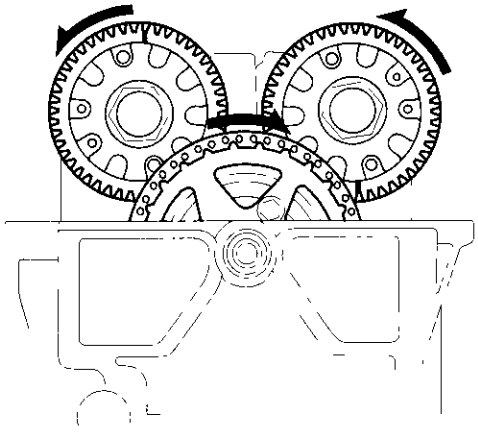

8. Check and, if necessary, adjust the valve clearance on No. 3 cylinder.

9. Rotate the crankshaft 180° clockwise (camshaft gears turn 90°)

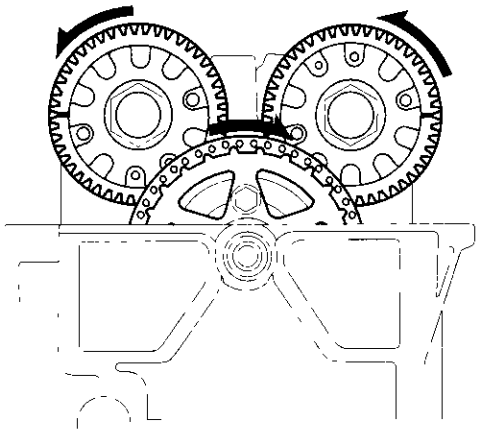

10. Check and, if necessary, adjust the valve clearance on No. 4 cylinder.

11. Rotate the crankshaft 180° clockwise (camshaft gears turn 90°)

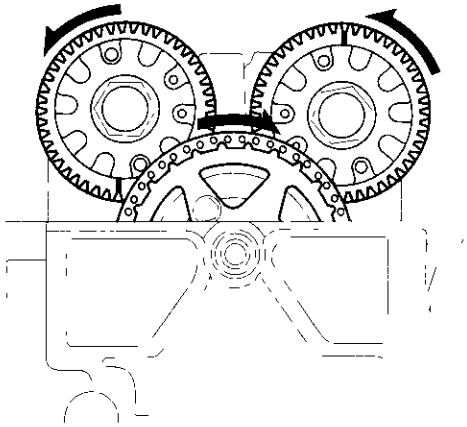

12. Check and, if necessary, adjust the valve clearance on No. 2 cylinder.

13. Install the cylinder head cover (see page 6-53).

## Crankshaft Pulley Removal and Installation

**Special Tools Required**
- Holder handle 07JAB-001020A
- Holder attachment, 50 mm 07JAB-001040A
- Socket, 19 mm 07JAA-001020A
  or a commercially-available 19 mm socket

### Removal

1. Hold the pulley with holder handle (A) and holder attachment (B).

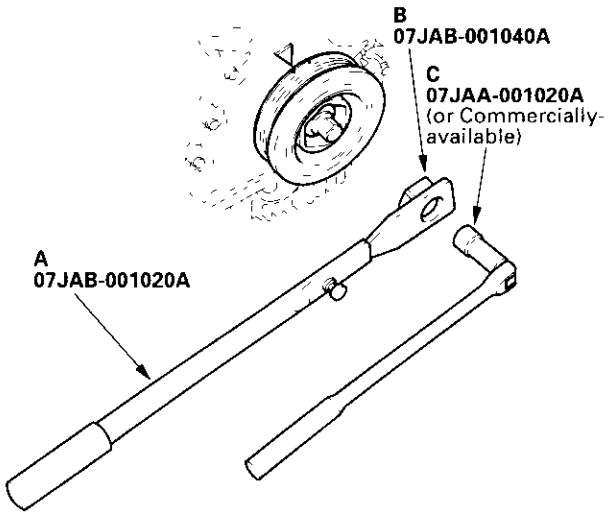


2. Remove the bolt with a heavy duty 19 mm socket (C) and breaker bar.

### Installation

1. Clean the bolt (A), washer (B), pulley (C) and crankshaft (D). Lubricate as shown below.

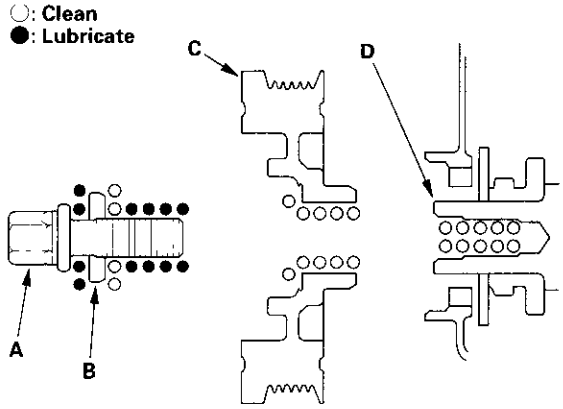


2. Install the crankshaft pulley, and tighten the bolt to 245 N·m (25.0 kgf·m, 181 lbf·ft). Do not use an impact wrench.

## Cam Chain Removal

**Special Tools Required**
- Holder handle 07JAB-001020A
- Holder attachment, 50 mm 07JAB-001040A
- Socket, 19 mm 07JAA-001020A
  or a commercially available 19 mm socket

NOTE:
- Use fender covers to avoid damaging painted surfaces.
- To avoid damage, unplug the wiring connectors carefully while holding the connector portion.
- To avoid damaging the cylinder head, wait until the engine coolant temperature drops below 100°F (38°C) before loosening the cylinder head bolts.
- Mark all wiring and hoses to avoid misconnection. Also, be sure that they do not contact other wiring or hoses, or interfere with other part.
- Keep the cam chain away from magnets. A magnetized cam chain may misfire or cause false DTCs.

1. Make sure you have the anti-theft code for the radio, then write down the frequencies for the radio's preset buttons.
2. Disconnect the negative cable from the battery first, then disconnect the positive cable.
3. Drain the engine coolant (see page 10-8).
4. Drain the engine oil (see page 8-5).
5. Disconnect the air control solenoid valve connector, then remove the vacuum hoses and the air cleaner housing/intake air duct assembly (see page 6-25).
6. Remove the vacuum tank.

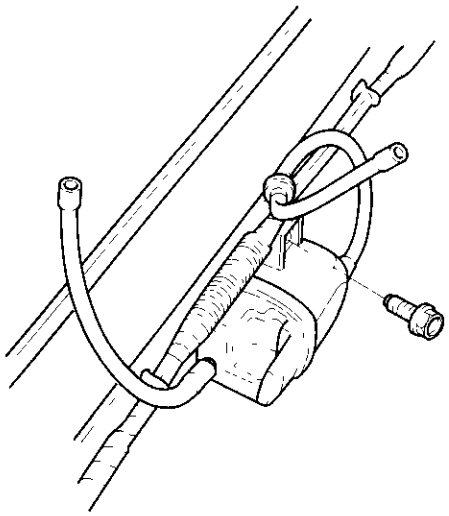

7. Loosen the water pump pulley bolts.
8. Move the auto-tensioner (A) to remove tension from the alternator-compressor belt (B), then remove the alternator-compressor belt.

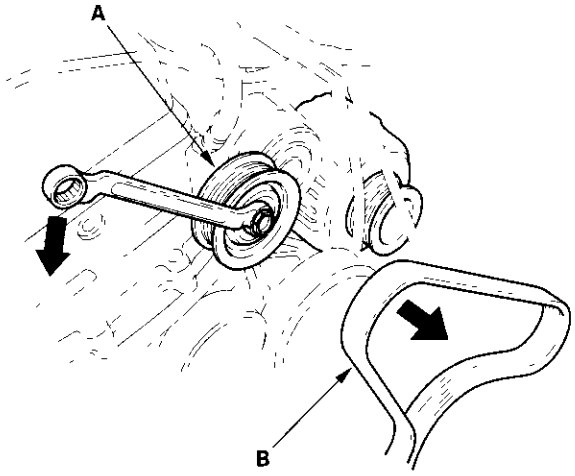


(cont'd)

## Cam Chain Removal (cont'd)

9. Remove the water bypass hose (A), then remove the three bolts (B) securing the water bypass tube (C).

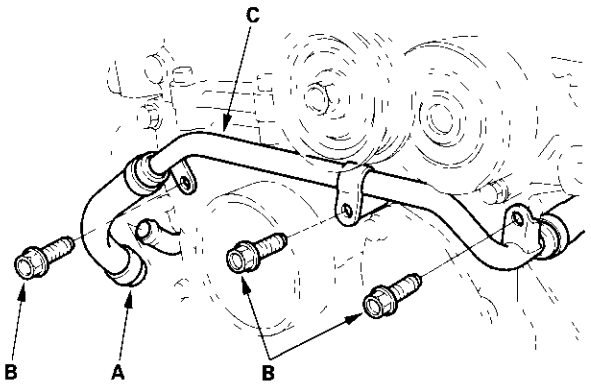


10. Remove the water pump pulley.

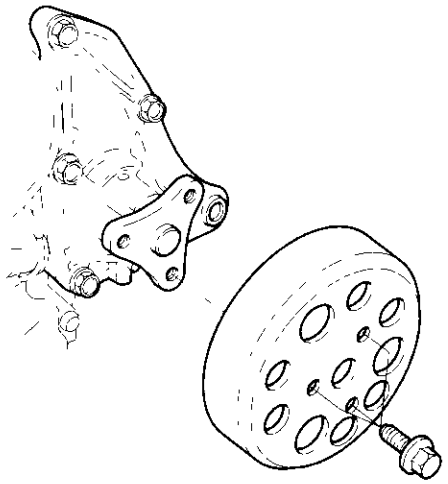

11. Remove the auto-tensioner (see page 4-27).

12. Remove the alternator (see page 4-26).

13. Remove the idler pulley (A), then remove the idler pulley base (B).

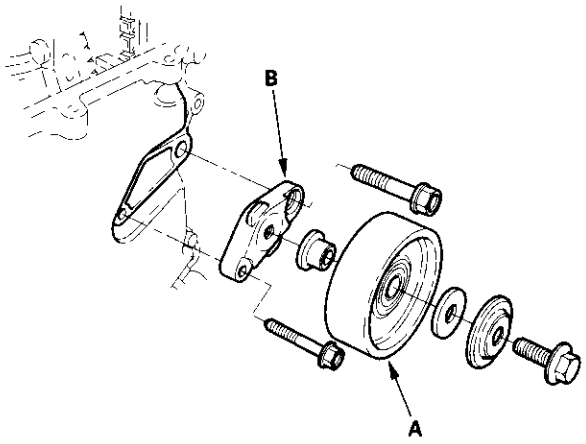


14. Remove the throttle cable (see step 9 on page 5-3).

15. Relieve fuel pressure (see page 11-105).

16. Remove the fuel feed hose, fuel return hose and brake booster vacuum hose (see step 9 on page 6-26).

17. Remove the evaporative emission (EVAP) canister hose (see step 10 on page 6-26).

18. Remove the bolt securing the intake manifold bracket, and remove the air hose (see step 11 on page 6-26).

19. Remove the water outlet cover (see step 12 on page 6-26).

20. Remove the two bolts securing the intake manifold bracket, and remove the water bypass hose (see step 13 on page 6-27).

21. Remove the engine wire harness connectors and wire harness clamps from the cylinder head and intake manifold.

    - Four fuel injector connectors
    - Intake air temperature (IAT) sensor connector
    - Idle air control (IAC) valve connector
    - Throttle position (TP) sensor connector
    - Manifold absolute pressure (MAP) sensor connector
    - Engine coolant temperature (ECT) sensor connector
    - Primary heated oxygen sensor (primary HO2S) connector
    - VTEC solenoid valve connector
    - VTEC pressure switch connector
    - Crankshaft position (CKP) sensor connector

22. Remove the four bolts securing the exhaust manifold cover (see step 15 on page 6-27).

23. Remove the heat shield (see step 16 on page 6-27).

24. Remove the exhaust manifold cover, then remove the exhaust manifold bracket and exhaust manifold (see step 17 on page 6-28).

25. Remove the dipstick, Positive Crankcase Ventilation (PCV) hose and breather hose (see step 18 on page 6-28).

26. Remove the ignition coil cover, then remove the ignition coils (see step 19 on page 6-28).

27. Remove the cylinder head cover (see step 21 on page 6-29).

28. Set the No. 1 piston at top dead center (TDC) (see step 22 on page 6-29).

29. Remove the end cover and nozzle from the cam chain auto-tensioner (see step 23 on page 6-29).

30. Thread a nut onto the 5 x 0.8 mm bolt, then thread the bolt into the maintenance hole in the cam chain auto-tensioner (see step 24 on page 6-29).

31. Turn the bolt clockwise to compress the cam chain auto-tensioner, and lock the bolt with the nut (see step 25 on page 6-29).

32. Remove the cam chain auto-tensioner (see step 26 on page 6-30).

33. Loosen the rocker arm adjusting screws (see step 27 on page 6-30).

34. Remove the camshaft holders and camshafts.

35. Remove the rocker arm assembly (see step 29 on page 6-30).

36. Remove the idler gear/idler gear collar/washer assembly. Do not drop the washer into the chain case (see step 30 on page 6-30).

37. Remove the cylinder head bolts (see step 31 on page 6-31). To prevent warpage, unscrew the bolts in sequence 1/3 turn at a time; repeat the sequence until all bolts are loosened.

38. Remove the cylinder head.

39. Remove the oil pan.

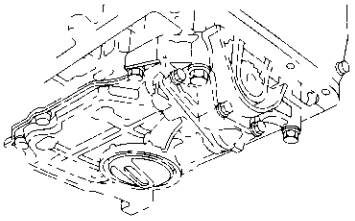

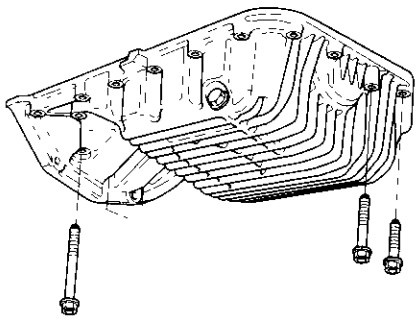

(cont'd)

## Cam Chain Removal (cont'd)

40. Hold the pulley with holder handle (A) and holder attachment (B).

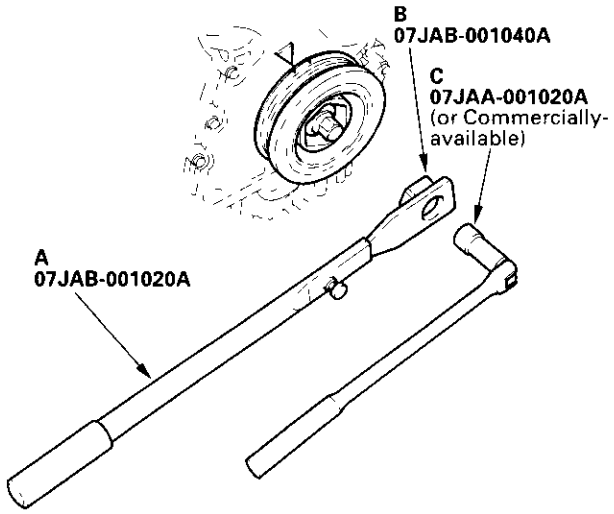


41. Remove the bolt with a heavy duty 19 mm socket (C) and breaker bar.

42. Remove the chain case.

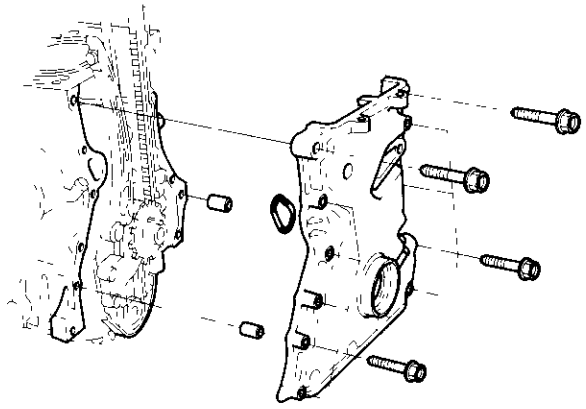

43. Remove the oil pump chain guide.

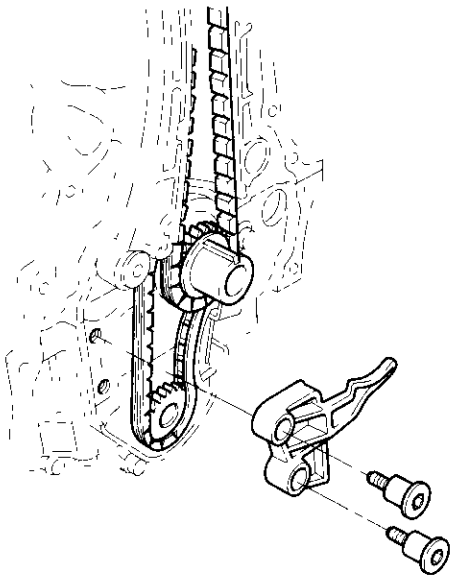

44. Remove the cam chain.

## Cam Chain Installation

**Special Tools Required**
- Holder handle 07JAB-001020A
- Holder attachment, 50 mm 07JAB-001040A
- Socket, 19 mm 07JAA-001020A
  or a commercially available 19 mm socket

1. Set the crankshaft sprocket so that the No. 1 piston is at top dead center (TDC). Align the key (A) on the sprocket and crankshaft with the pointer (B) on the cylinder block.

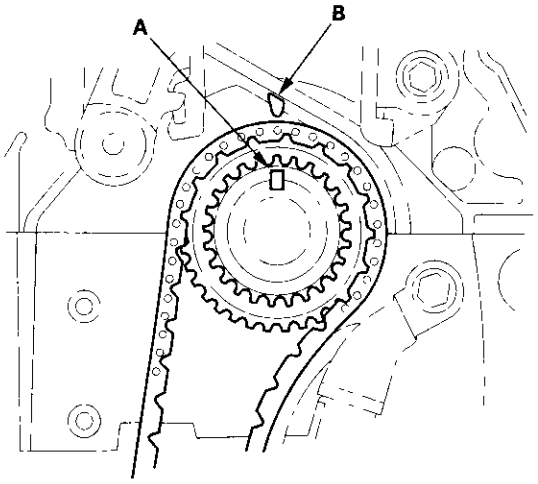


2. Install the cam chain with the colored piece (A) aligned with the punch mark (B) on the crankshaft sprocket.

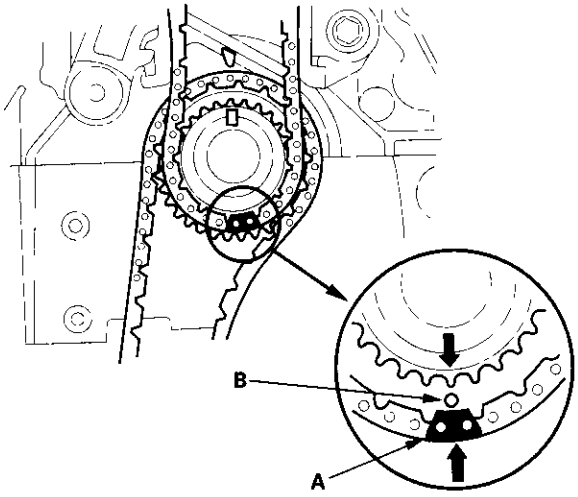


3. Install the oil pump chain guide.

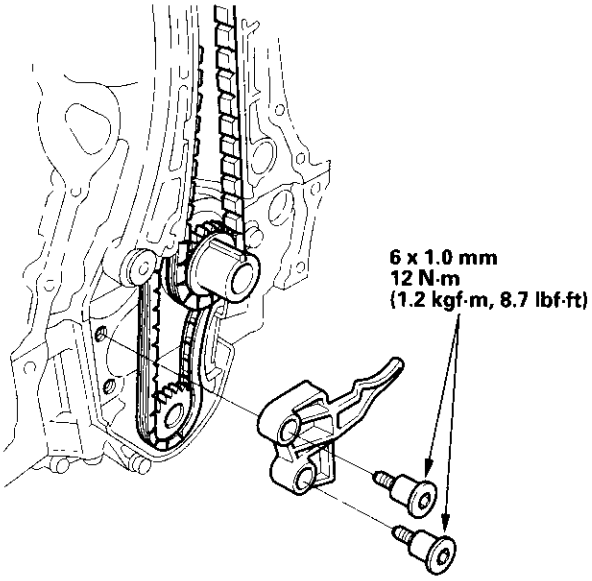


(cont'd)

## Cam Chain Installation (cont'd)

4. Remove old liquid gasket from the chain case mating surfaces, bolts and bolt holes.

5. Clean and dry the chain case mating surfaces.

6. Apply liquid gasket, part No. 08718-0009, evenly to the cylinder block mating surface of the chain case and to the inner threads of the bolt holes.

   NOTE: Do not install the parts if 5 minutes or more have elapsed since applying liquid gasket. Instead, reapply liquid gasket after removing old residue.

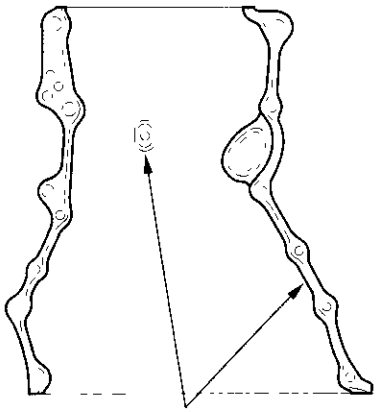


7. Install the dowel pins (A) and chain case (B) using a new O-ring (C).

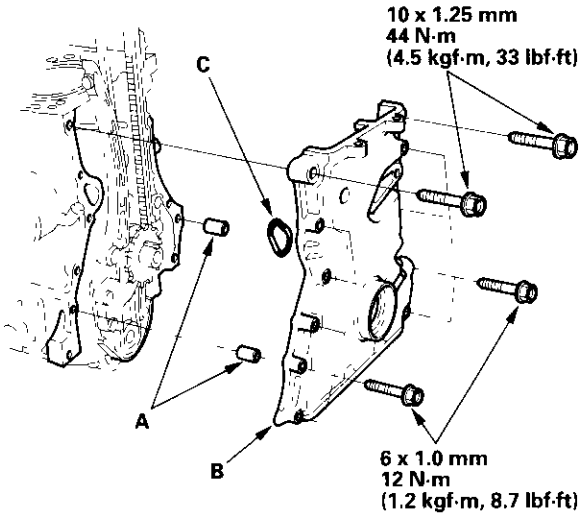


8. Remove old liquid gasket from the oil pan mating surfaces, bolts and bolt holes.

9. Clean and dry the oil pan mating surfaces.

10. Apply liquid gasket, part No. 08718-0009, evenly to the cylinder block mating surface of the oil pan and to the inner threads of the bolt holes. Install the oil pan.

    NOTE: Do not install the parts if 5 minutes or more have elapsed since applying liquid gasket. Instead, reapply liquid gasket after removing old residue.

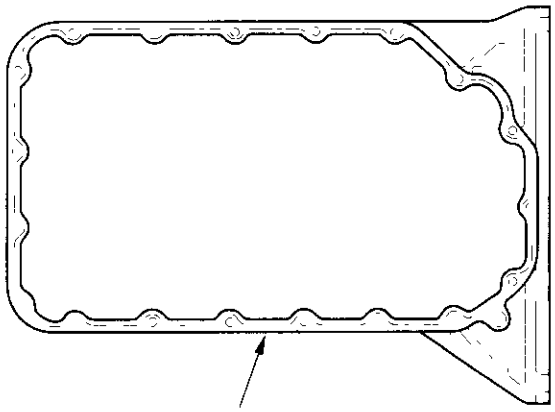


11. Tighten the bolts in two or three steps. In the final step, tighten all bolts, in sequence, to 12 N·m (1.2 kgf·m, 8.7 lbf·ft).

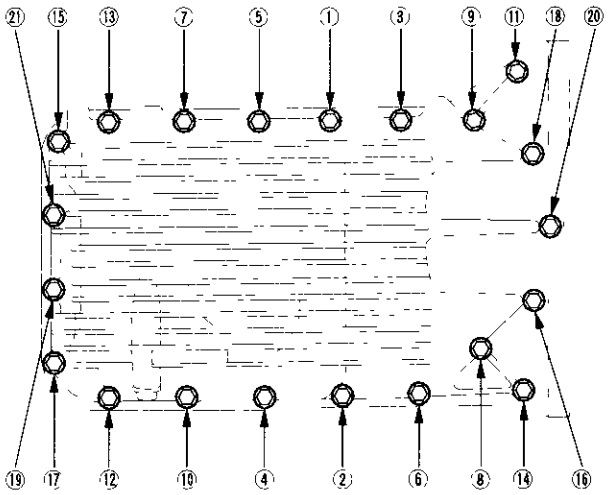

12. Clean the bolt (A), washer (B), pulley (C) and crankshaft (D). Lubricate as shown below.

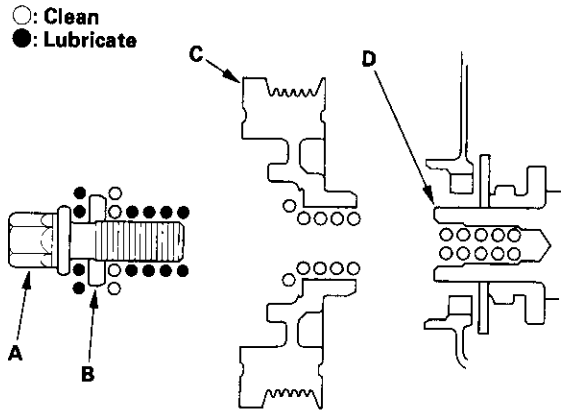


13. Install the crankshaft pulley, and tighten the bolt to 245 N·m (25.0 kgf·m, 181 lbf·ft). Do not use an impact wrench.

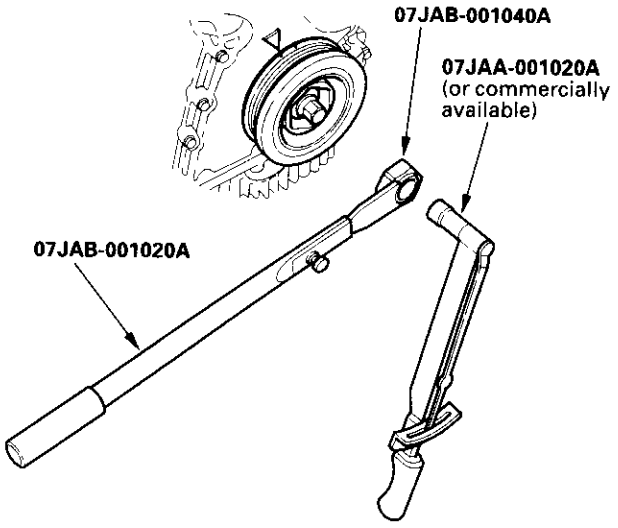


14. Measure the diameter of each cylinder head bolt at point A and point B (see step 1 on page 6-45). If either diameter is less than 11.5 mm (0.45 in.), replace the cylinder head bolt.

15. Clean the cylinder head and block surfaces.

16. Apply liquid gasket, part No. 08718-0009, to the shaded areas of the cylinder head gasket mating surface of the block and chain case (see step 3 on page 6-45).

17. Install the dowel pins and new cylinder head gasket (see step 4 on page 6-46).

18. Apply liquid gasket, part No. 08718-0009, to the cylinder head mating surface of the block and chain case within 5 mm from the edge of the cylinder head gasket (see step 5 on page 6-46).

19. Install the cylinder head on the block.

20. Apply engine oil to the threads and under the heads of all the cylinder head bolts.

21. Tighten the cylinder head bolts in sequence to 29 N·m (3.0 kgf·m, 22 lbf·ft). Use a beam-type torque wrench. When using a preset-type torque wrench, be sure to tighten slowly and do not overtighten. If a bolt makes any noise while you are torquing it, loosen the bolt and retighten it (see step 8 on page 6-46).

22. Tighten all cylinder head bolts in two steps (90° per step). If you are using a new cylinder head bolt, tighten the bolt an extra 90° (see step 9 on page 6-46).

23. Tighten the 8 mm bolts to 22 N·m (2.2 kgf·m, 16 lbf·ft).

24. Make sure the crankshaft pulley is at TDC (see step 11 on page 6-47).

25. Place the idler gear/cam chain sprocket assembly into the cylinder head (see step 12 on page 6-47).

(cont'd)

## Cam Chain Installation (cont'd)

26. Install the cam chain on the sprocket with the punch mark (A) aligned with the center of the two colored pieces (B).

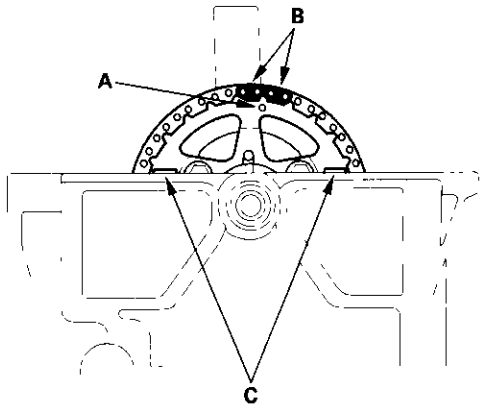


27. Fit the cam chain sprocket assembly into the cylinder head.

28. Turn the idler gear counterclockwise to relieve cam chain free play, and check the alignment of the TDC marks (C) on the cam chain sprocket with the cylinder head surface. If the cam chain sprocket is not positioned at TDC, remove the assembly from the cylinder head and reposition the cam chain to bring the cam chain sprocket to TDC.

29. Apply engine oil to the idler gear center bolt threads. Install a new O-ring on the bolt.

30. Install the washer on the idler gear, and tighten the idler gear center bolt (see step 16 on page 6-47).

31. Clamp the cam chain auto-tensioner in a soft-jawed vise (see step 17 on page 6-48).

32. Turn the 5 x 0.8 mm bolt clockwise to compress the bottom of the auto-tensioner, then insert the set pin (see step 18 on page 6-48).

33. Remove the 5 x 0.8 mm bolt from the maintenance hole. Install a new O-ring, then install the nozzle and end cover (see step 19 on page 6-48).

34. Install the cam chain auto-tensioner in the cylinder head with new O-rings (see step 20 on page 6-48).

35. Remove the maintenance bolt from the cylinder head (see step 21 on page 6-48).

36. Remove the set pin from the cam chain auto-tensioner. Reinstall the maintenance bolt with new washer (see step 22 on page 6-48).

37. Install the rocker arm assembly.

38. Check the alignment of the TDC marks on the cam chain sprocket with the cylinder head surface (see step 23 on page 6-49).

39. Align the TDC marks on the intake camshaft gear and the exhaust camshaft gear, and install the camshafts (see step 25 on page 6-49).

40. Apply engine oil to the bolt threads of all the camshaft holder bolts.

41. Put the camshaft holders on the cylinder head, then tighten all bolts to 22 N·m (2.2 kgf·m, 16 lbf·ft) (see step 27 on page 6-49).

42. Make sure the camshaft gears are at TDC.

43. Adjust the valve clearance (see page 6-12).

44. Install the cylinder head cover (see page 6-53).

45. Install the exhaust manifold using new gaskets and new self-locking nuts (see step 31 on page 6-50).

46. Install the exhaust manifold bracket. Make sure the smooth sides of the washers face the exhaust manifold bracket (see step 32 on page 6-50).

47. Put the exhaust manifold cover on the exhaust manifold.

48. Install the heat shield (see step 34 on page 6-50).

49. Tighten the four bolts securing the exhaust manifold cover (see step 35 on page 6-50).

50. Install the water bypass hose, and tighten the two bolts securing the intake manifold bracket (see step 37 on page 6-51).

51. Install the water outlet cover (see step 38 on page 6-51).

52. Install the air hose, and tighten the bolt securing the intake manifold bracket (see step 39 on page 6-52).

53. Install the evaporative emission (EVAP) control canister hose (see step 40 on page 6-52).

54. Install the fuel feed hose, fuel return hose and brake booster hose (see step 41 on page 6-52).

55. Install the idler pulley base (A), then install the idler pulley (B).

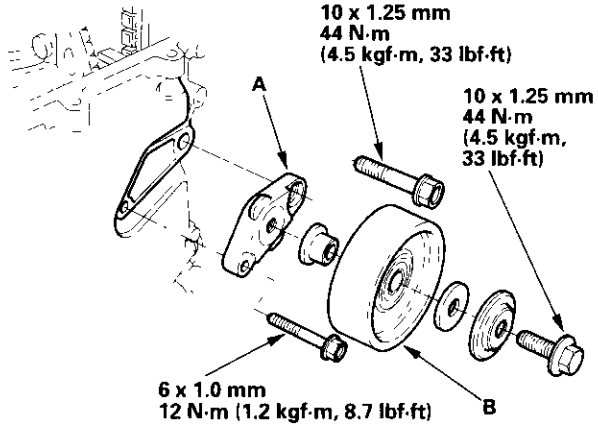


56. Install the alternator (see page 4-26).

57. Install the auto-tensioner (see page 4-27).

58. Install the water pump pulley.

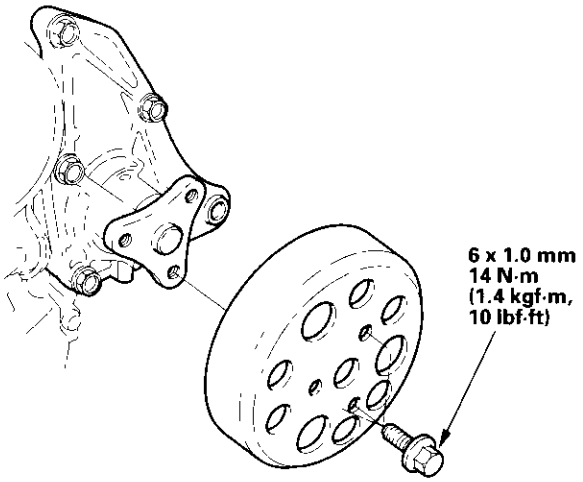


59. Install the water bypass hose (A), and tighten the three bolts (B) securing the water bypass tube.

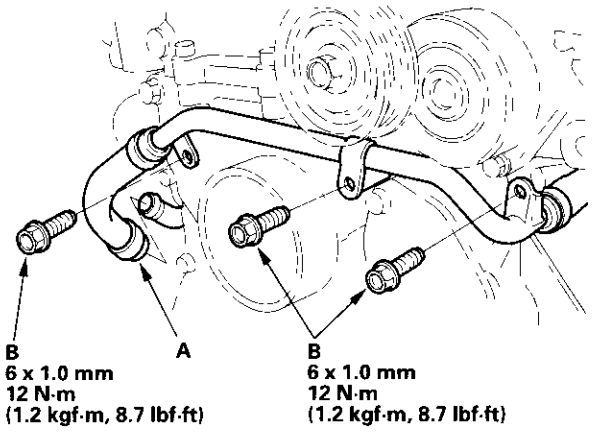


(cont'd)

## Cam Chain Installation (cont'd)

60. Install the alternator-compressor belt.

61. Install the vacuum tank.

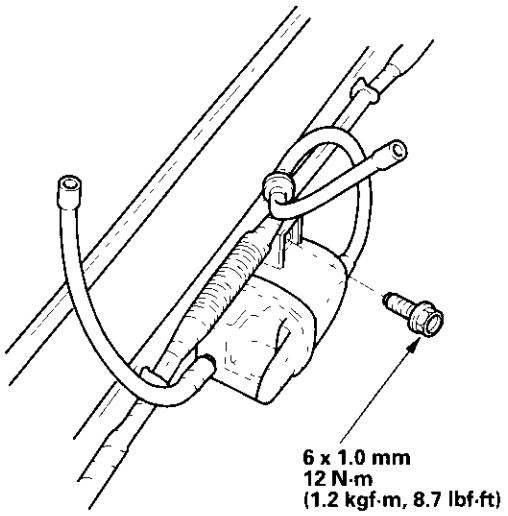


62. Install the air cleaner housing/intake air duct assembly, then install the vacuum hoses. Connect the air control solenoid valve connector (see step 43 on page 6-52).

63. Install the throttle cable (see page 11-125), then adjust the cable (see page 11-124).

64. After installation, check that all tubes, hoses and connectors are installed correctly.

65. After assembly, wait at least 30 minutes before filling the engine with oil (see page 8-5).

66. Refill the radiator with engine coolant, and bleed air from the cooling system with the heater valve open (see page 10-8).

67. Inspect for fuel leaks. Turn ON (II) the ignition switch (do not operate the starter) so that the fuel pump runs for about 2 seconds and pressurizes the fuel line. Repeat this operation two or three times, then check for fuel leakage at any point in the fuel line.

68. Inspect the idle speed (see page 11-100).

69. Inspect the ignition timing (see page 4-18).

70. Connect the negative battery cable first, then connect the positive cable.

71. Enter the anti-theft code for the radio, then enter the customer's radio station presets.

72. Reset the clock.

## Chain Case Oil Seal Installation

**Special Tools Required**
- Driver 07749-0010000
- Attachment, 52 x 55 mm 07746-0010400

1. Use the special tools to drive a new oil seal squarely into the chain case to the specified installed height.

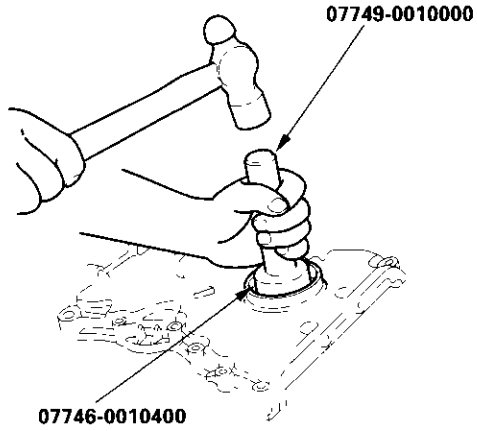


2. Measure the distance between the chain case surface (A) and the oil seal (B).

**Oil Seal Installed Height:**
**34.0-34.7 mm (1.34-1.37 in.)**

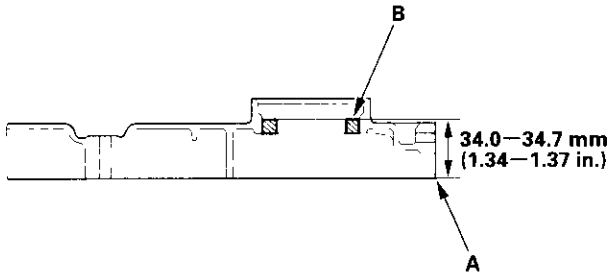

## Cylinder Head Removal

NOTE:
- Use fender covers to avoid damaging painted surfaces.
- To avoid damage, unplug the wiring connectors carefully while holding the connector portion.
- To avoid damaging the cylinder head, wait until the engine coolant temperature drops below 100°F (38°C) before loosening the cylinder head bolts.
- Mark all wiring and hoses to avoid misconnection. Also, be sure that they do not contact other wiring or hoses, or interfere with other part.

1. Make sure you have the anti-theft code for the radio, then write down the frequencies for the radio's preset buttons.

2. Disconnect the negative cable from the battery first, then disconnect the positive cable.

3. Drain the engine coolant (see page 10-8).

4. Drain the engine oil (see page 8-5).

5. Disconnect the air control solenoid valve connector (A), then remove the vacuum hoses (B) and the air cleaner housing/intake air duct assembly (C).

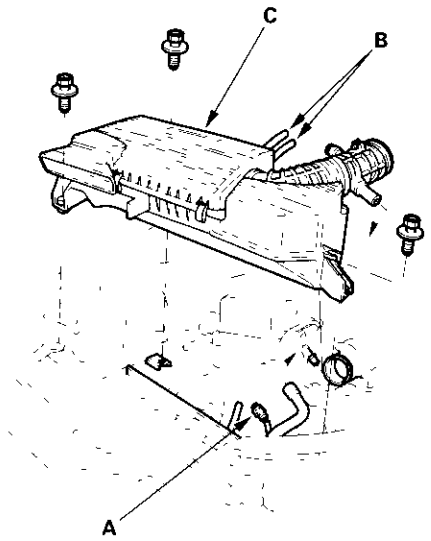


6. Move the auto-tensioner (A) to remove tension from the alternator belt (B), then remove the alternator-compressor belt.

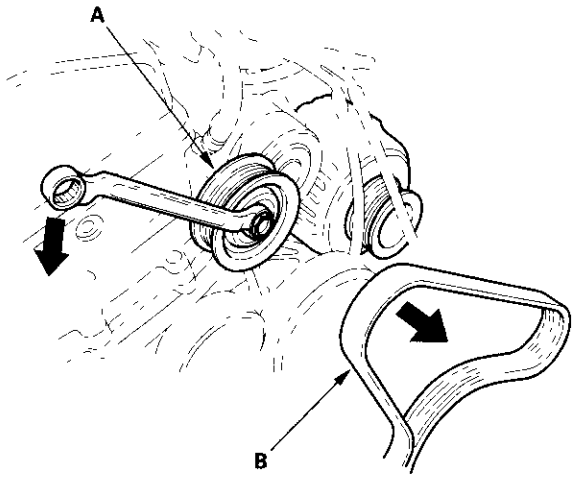


7. Remove the throttle cable (A) by loosening the locknut (B), then slipping the cable end out of the accelerator linkage. Take care not to bend the cable when removing it. Always replace any kinked cable with a new one.

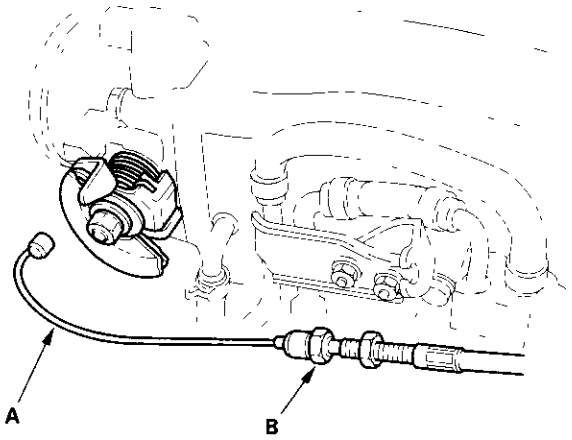


(cont'd)

## Cylinder Head Removal (cont'd)

8. Relieve fuel pressure.

9. Remove the fuel feed hose (A), fuel return hose (B) and brake booster vacuum hose (C).

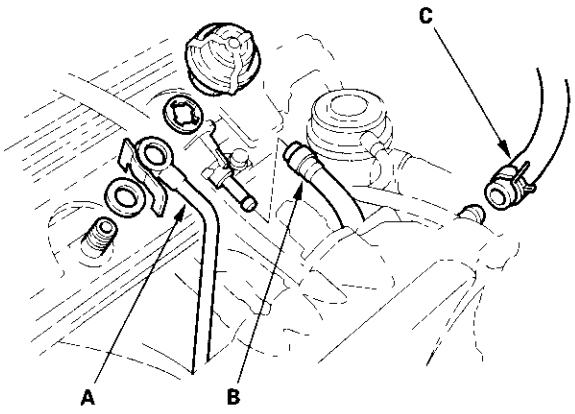


10. Remove the evaporative emission (EVAP) canister hose.

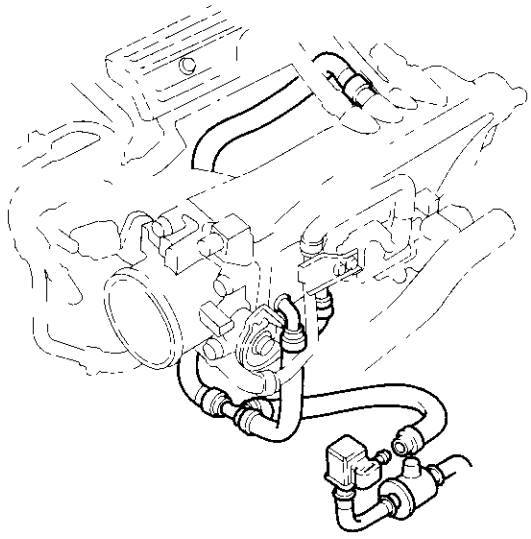

11. Remove the bolt (A) securing the intake manifold bracket, and remove the air hose (B).

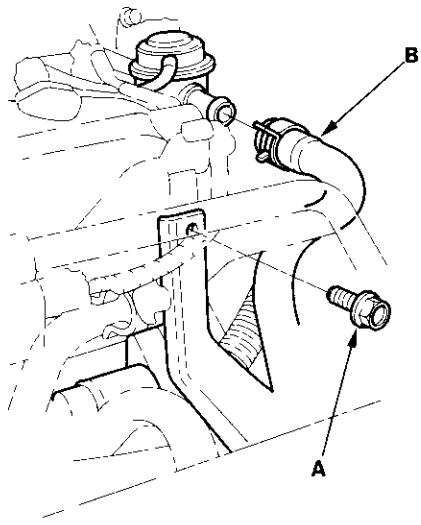


12. Remove the water outlet cover.

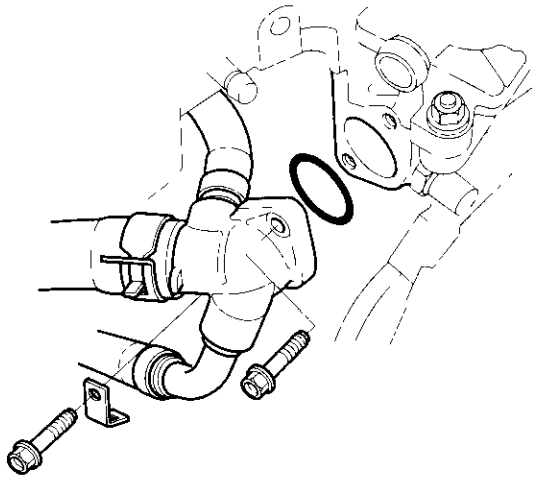

13. Remove two bolts (A) securing the intake manifold bracket, and remove the water bypass hose (B).

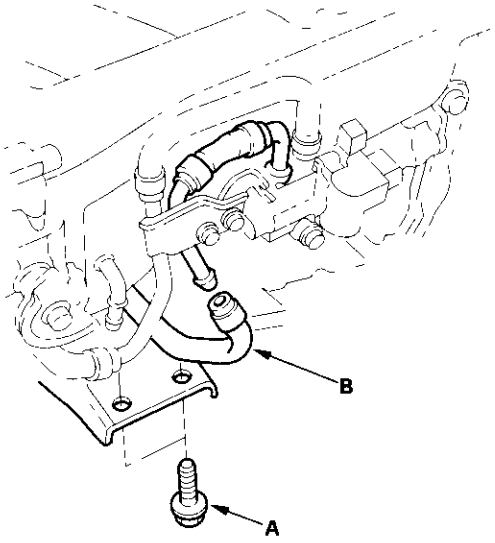


14. Remove the engine wire harness connectors and wire harness clamps from the cylinder head and intake manifold.

- Four fuel injector connectors
- Intake air temperature (IAT) sensor connector
- Idle air control (IAC) valve connector
- Throttle position (TP) sensor connector
- Manifold absolute pressure (MAP) sensor connector
- Engine coolant temperature (ECT) sensor connector
- Primary heated oxygen sensor (primary HO2S) connector
- VTEC solenoid valve connector
- VTEC pressure switch connector
- Crankshaft position (CKP) sensor connector

15. Remove the four bolts securing the exhaust manifold cover.

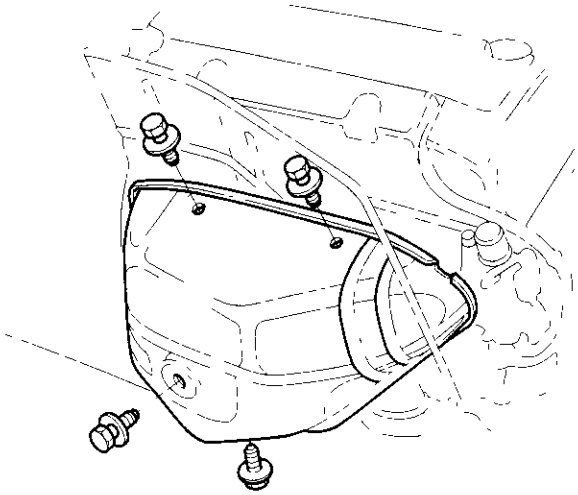

16. Remove the three bolts (A), and loosen the bolt (B), then remove the heat shield (C).

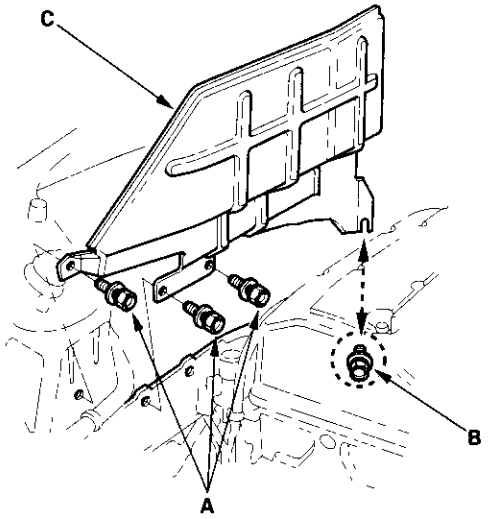


(cont'd)

## Cylinder Head Removal (cont'd)

17. Remove the exhaust manifold cover, then remove the exhaust manifold bracket (A) and the exhaust manifold (B).

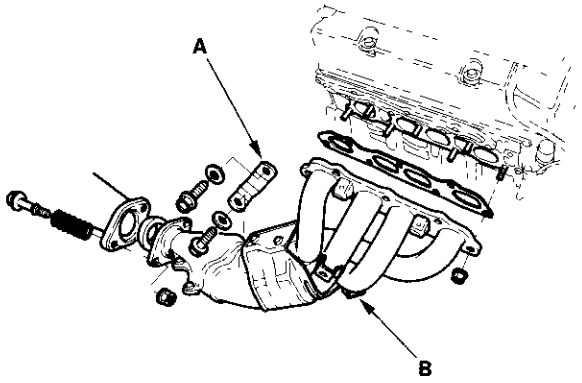


18. Remove the dipstick (A), positive crankcase ventilation (PCV) hose (B) and breather hose (C).

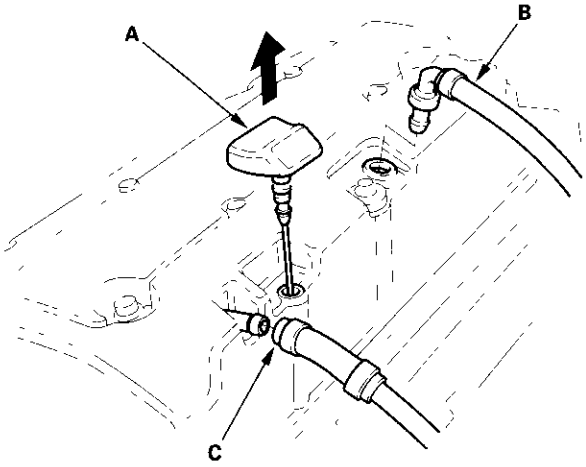


19. Remove the ignition coil cover (A), then remove the ignition coils (B).

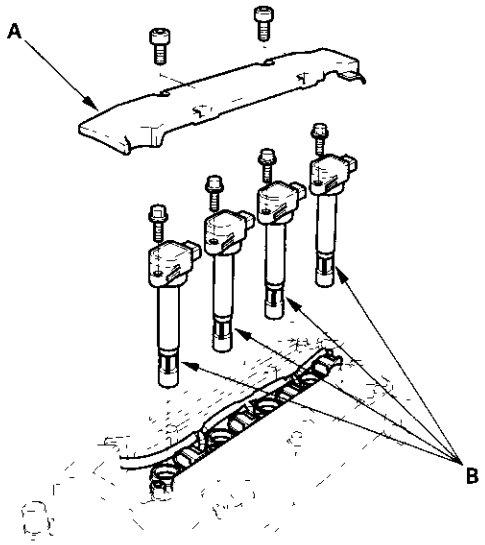


20. Remove the intake manifold bracket (A) and the intake manifold (B).

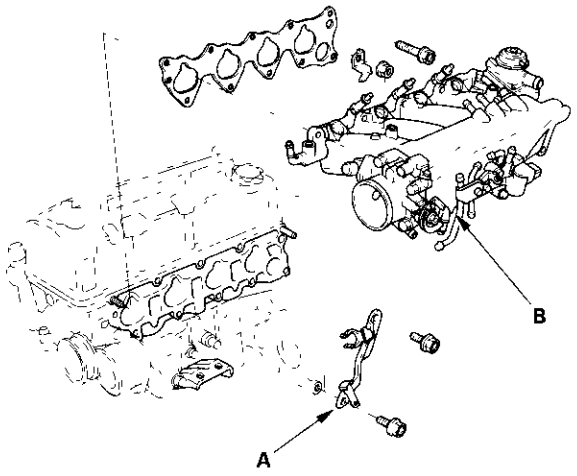

21. Remove the cylinder head cover.

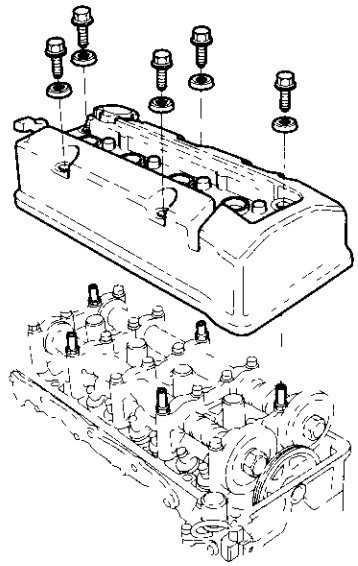

22. Set the No. 1 piston at top dead center (TDC). The TDC marks (A) on the cam chain sprocket should align with the cylinder head surface.

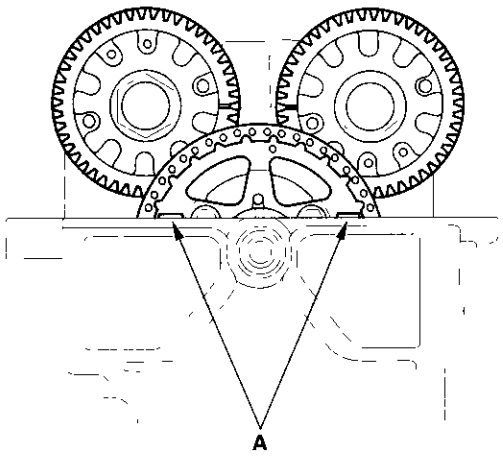


23. Remove the end cover (A) and nozzle (B) from the cam chain auto-tensioner.

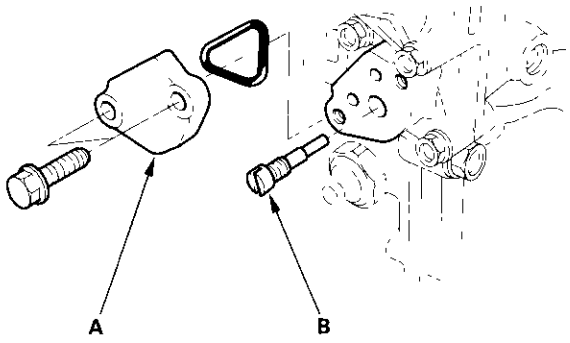


24. Thread a nut (A) onto a 5 x 0.8 mm bolt that is at least 40 mm long (B), then thread the bolt into the maintenance hole in the cam chain auto-tensioner.

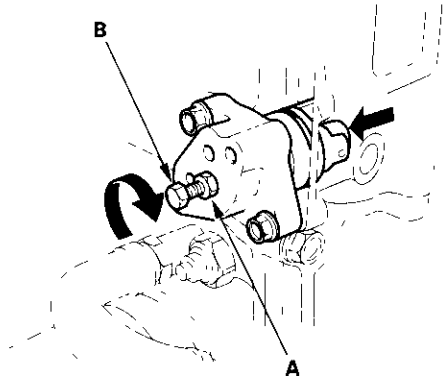


25. Turn the bolt clockwise to compress the cam chain auto-tensioner, and lock the bolt with the nut.

(cont'd)

## Cylinder Head Removal (cont'd)

26. Remove the cam chain auto-tensioner.

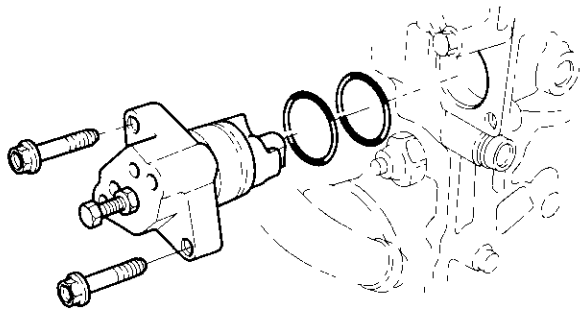

27. Loosen the rocker arm adjusting screws (A).

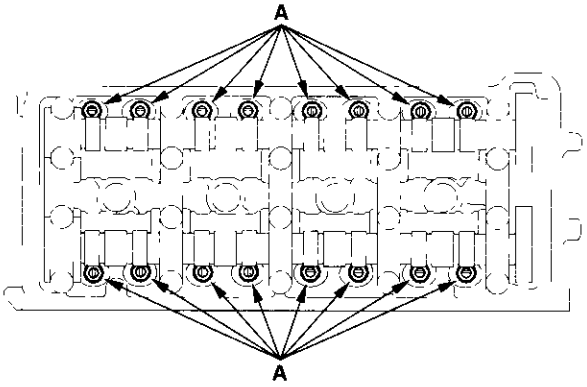


28. Remove the camshaft holders and camshafts.

29. Insert the bolts (A) into the rocker shaft holder, then remove the rocker arm assembly (B).

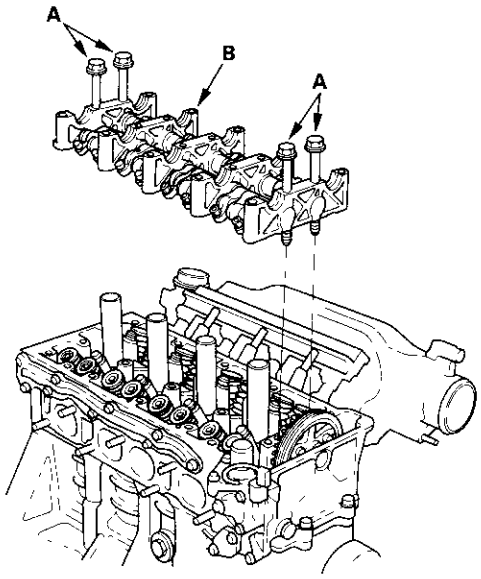


30. Remove the idler gear/cam chain sprocket/washer assembly. Do not drop the washer into the chain case.

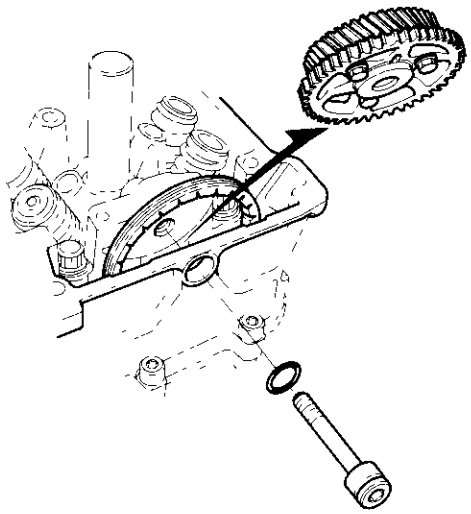

31. Remove the cylinder head bolts. To prevent warpage, unscrew the bolts in sequence 1/3 turn at a time; repeat the sequence until all the bolts are loose.

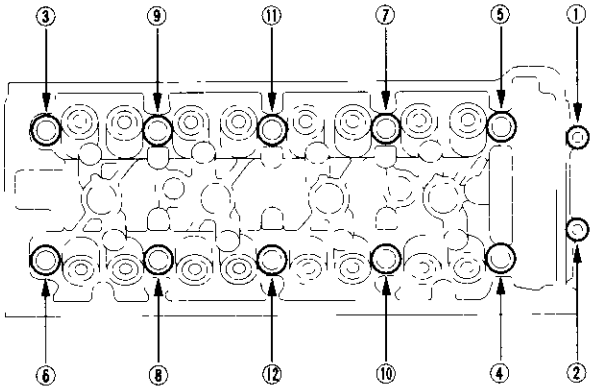


32. Remove the cylinder head.

## Camshaft Gear Removal

1. Remove the dipstick, positive crankcase ventilation (PCV) hose and breather hose (see step 18 on page 6-28).
2. Remove the ignition coil cover, then remove the ignition coils (see step 19 on page 6-28).
3. Remove the cylinder head cover (see step 21 on page 6-29).
4. Loosen the rocker arm adjusting screws (see step 27 on page 6-30).
5. Remove the camshaft holders and camshafts.
6. Hold the camshaft with an open-end wrench, then loosen the camshaft gear mounting nut.

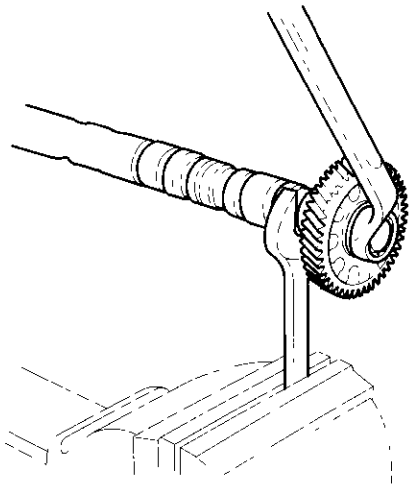

7. Remove the camshaft gear.

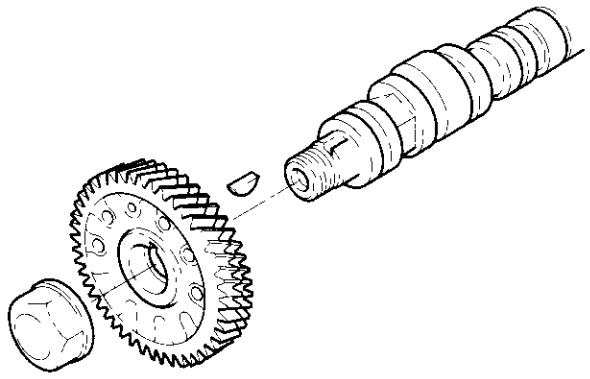

## Cylinder Head Inspection for Warpage

1. Remove the cylinder head (see page 6-25).
2. Inspect the camshaft (see page 6-36).
3. Check the cylinder head for warpage. Measure along the edges, and three ways across the center.
   - If warpage is less than 0.05 mm (0.002 in.) cylinder head resurfacing is not required.
   - If warpage is between 0.05 mm (0.002 in.) and 0.2 mm (0.008 in.), resurface the cylinder head.
   - Maximum resurface limit is 0.2 mm (0.008 in.) based on a height of 105 mm (4.13 in.).

**Cylinder Head Height:**
**Standard (New): 104.95 – 105.05 mm (4.132 – 4.136 in.)**

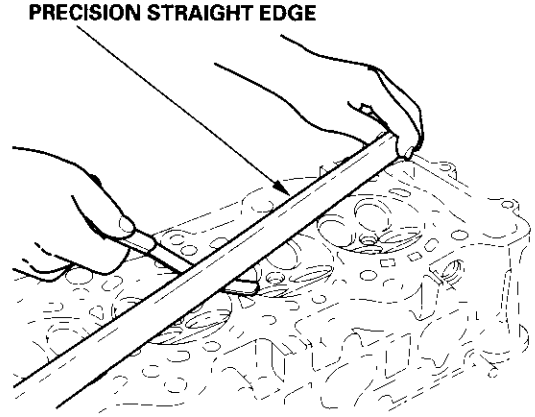


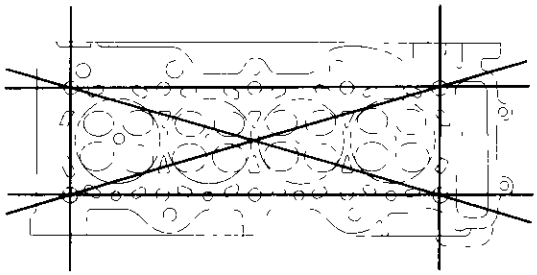

## Rocker Arms and Shafts Disassembly/Reassembly

NOTE:
- Identify parts as they are removed to ensure reinstallation in their original locations.
- Inspect rocker shafts and rocker arms (see page 6-34).
- Rocker arms must be installed in the same position if reused.
- Prior to reassembling, clean all the parts in solvent, dry them, and apply lubricant to any contact points.
- Bundle the rocker arms with rubber bands to keep them together as a set.

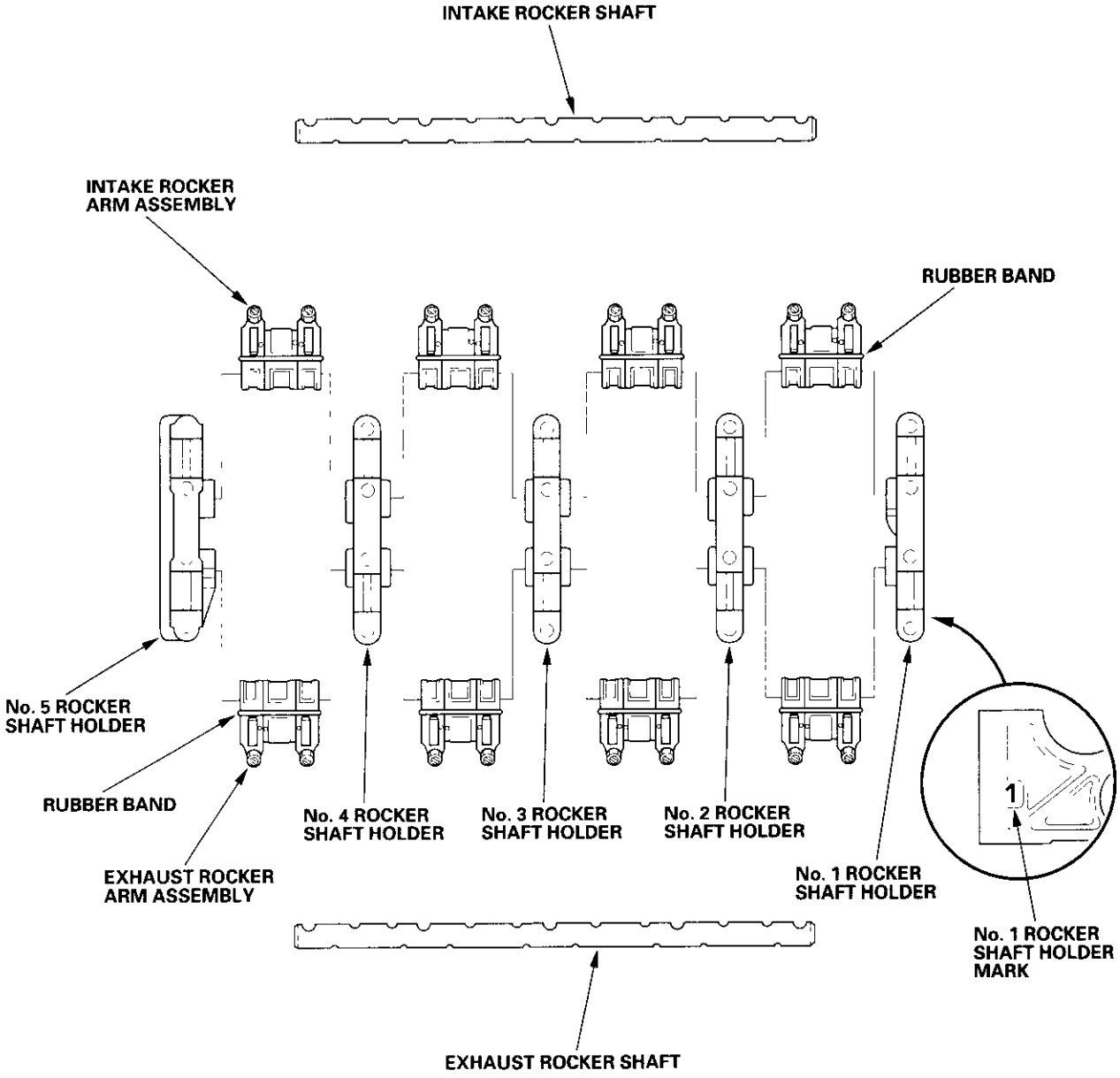

## Rocker Arms and Shafts Inspection

1. Remove the dipstick, positive crankcase ventilation (PCV) hose and breather hose (see step 18 on page 6-28).
2. Remove the ignition coil cover, then remove the ignition coils (see step 19 on page 6-28).
3. Remove the cylinder head cover (see step 21 on page 6-29).
4. Loosen the rocker arm adjusting screws (see step 27 on page 6-30).
5. Remove the camshaft holders and camshafts.
6. Insert the bolts into the rocker shaft holder, then remove the rocker arm assembly (see step 29 on page 6-30).
7. Measure the diameter of the shaft at the first rocker location.

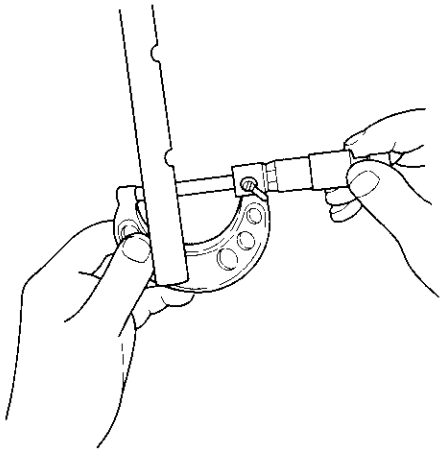

8. Zero the gauge (A) to the shaft diameter.

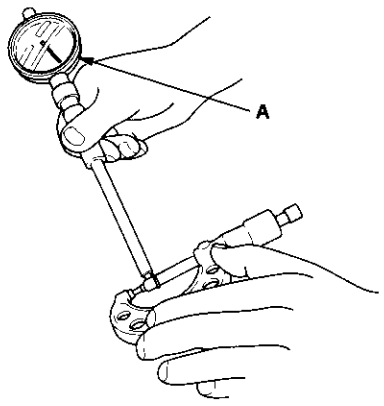


9. Measure the inside diameter of the rocker arm, and check it for an out-of-round condition.

**Rocker Arm-to-Shaft Clearance:**
**Standard (New): 0.021–0.041 mm (0.0008–0.0016 in.)**
**Service Limit: 0.07 mm (0.003 in.)**

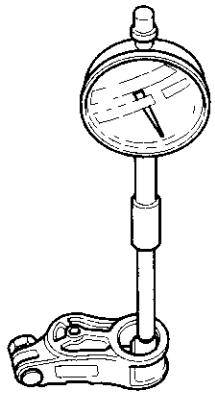

10. Repeat for all rocker arms and both shafts. If the clearance is over the limit, replace the rocker shaft and all overtolerance rocker arms. If any rocker arm needs replacement, replace all three rocker arms in that set (primary, mid, and secondary).

11. Inspect the rocker arm pistons (A). Push each piston manually.
If it does not move smoothly, replace the rocker arm assembly.

NOTE:
- When reassembling the primary rocker arm (B), carefully apply air pressure to its oil passage.
- Apply oil to the pistons when reassembling.

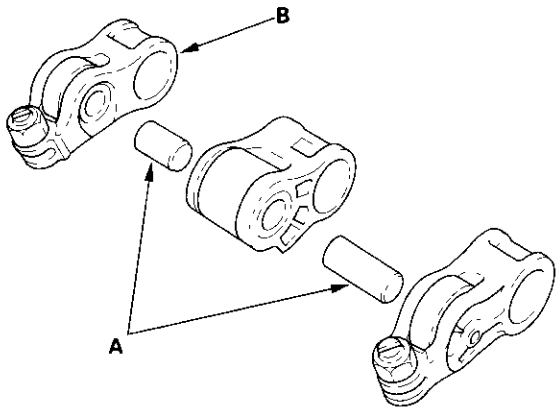

## Camshaft Inspection

NOTE: Do not rotate the camshaft during inspection.

1. Remove the dipstick, positive crankcase ventilation (PCV) hose and breather hose (see step 18 on page 6-28).
2. Remove the ignition coil cover, then remove the ignition coils (see step 19 on page 6-28).
3. Remove the cylinder head cover (see step 21 on page 6-29).
4. Loosen the rocker arm adjusting screws (see step 27 on page 6-30).
5. Remove the camshaft holders and camshafts.
6. Insert the bolts into the rocker shaft holder, then remove the rocker arm assembly (see step 29 on page 6-30).
7. Disassemble the rocker arm assembly.
8. Put the rocker shaft holders, camshafts and the camshaft holders on the cylinder head, then tighten the bolts to the specified torque.

   **Specified torque:**
   **8 x 1.25 mm**
   **22 N·m (2.2 kgf·m, 16 lbf·ft)**
   **Apply engine oil to the bolt threads.**

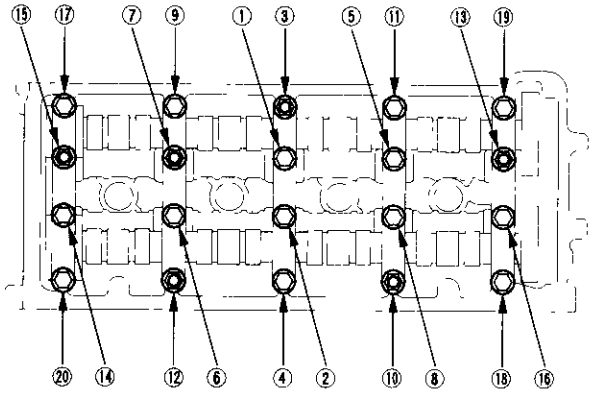


9. Seat the camshafts by pushing them toward the rear end of the cylinder head.
10. Zero the dial indicator against the end of the camshaft, then push the camshaft back and forth and read the end play. If the end play is beyond the service limit, replace the cylinder head and recheck. If it is still beyond the service limit, replace the camshaft.

    **Camshaft End Play:**
    **Standard (New): 0.05 – 0.15 mm (0.002 – 0.006 in.)**
    **Service Limit: 0.30 mm (0.012 in.)**

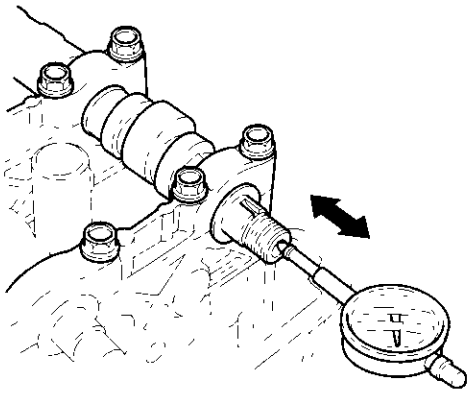

11. Unscrew the camshaft holder bolts two turns at a time, in a crisscross pattern. Then remove the camshaft holders and the rocker shaft holders from the cylinder head.
12. Lift the camshafts out of the cylinder head, wipe them clean, then inspect the lift ramps. Replace the camshaft if any lobes are pitted, scored, or excessively worn.
13. Remove the camshaft mounting bolts (A), dowel pins (B) and camshaft plates (C) on both camshafts. Wipe them clean and lubricate the mounting bolt threads with clean engine oil. Torque the bolts to 39 N·m (4.0 kgf·m, 29 lbf·ft).

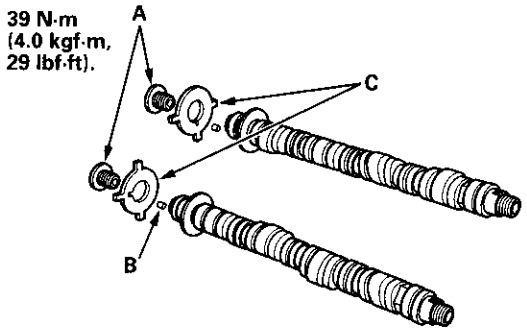


14. Clean the camshaft journal surfaces in the cylinder head, then set the camshafts back in place. Place a plastigage strip across each journal.
15. Install the camshaft holders, then tighten the bolts to the specified torque as shown in step 7.

16. Remove the camshaft holders. Measure the widest portion of plastigage on each journal.

    - If the camshaft-to-holder clearance is within limits, go to step 17.
    - If the camshaft-to-holder clearance is beyond the service limit and the camshaft has been replaced, replace the cylinder head.
    - If the camshaft-to-holder clearance is beyond the service limit and the camshaft has not been replaced, go to step 18.

    **Camshaft-to-Holder Oil Clearance:**
    **Standard (New): 0.060—0.099 mm (0.002—0.004 in.)**
    **Service Limit: 0.15 mm (0.006 in.)**

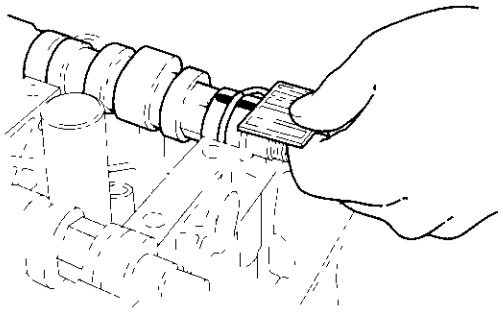

17. Check the total runout with the camshaft supported on V-blocks.

    - If the total runout of the camshaft is within the service limit, replace the cylinder head.
    - If the total runout is beyond the service limit, replace the camshaft and recheck the camshaft-to-holder oil clearance. If the oil clearance is still out of tolerance, replace the cylinder head.

    **Camshaft Total Runout:**
    **Standard (New): 0.03 mm (0.001 in.) max.**
    **Service Limit: 0.04 mm (0.002 in.)**

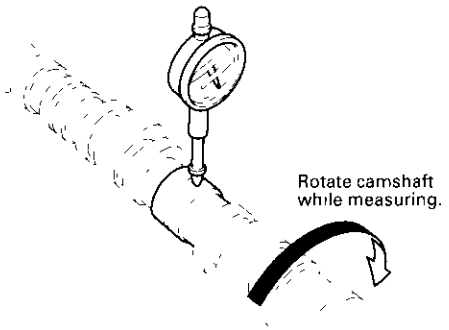


18. Measure cam lobe height.

    **Cam Lobe Height Standard (New):**

| | INTAKE | EXHAUST |
|---|---|---|
| PRIMARY | 33.677 mm (1.326 in.) | 33.716 mm (1.327 in.) |
| MID | 36.533 mm (1.438 in.) | 35.928 mm (1.414 in.) |
| SECONDARY | 33.961 mm (1.337 in.) | 33.994 mm (1.338 in.) |

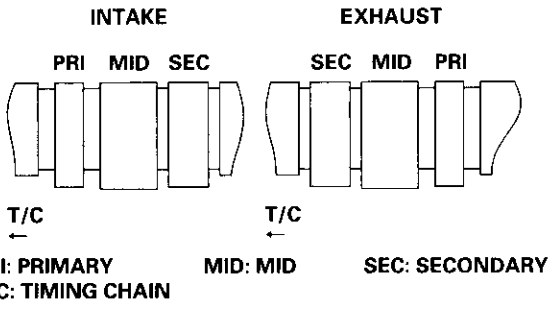


**PRI: PRIMARY MID: MID SEC: SECONDARY**
**T/C: TIMING CHAIN**

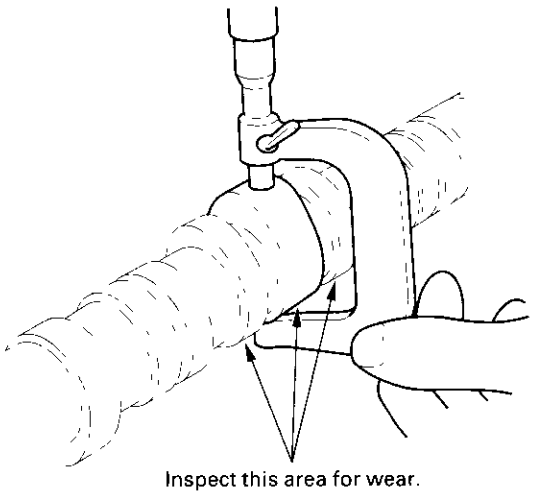

Inspect this area for wear.

## Valves, Springs, and Valve Seals Removal

**Special Tools Required**
Valve spring compressor attachment 07757-PJ1010A

Identify the valves and valve springs as they are removed so that each item can be reinstalled in its original position.

1. Remove the cylinder head (see page 6-25).
2. Using an appropriate-sized socket (A) and plastic mallet (B), lightly tap the valve retainer to loosen the valve keepers.

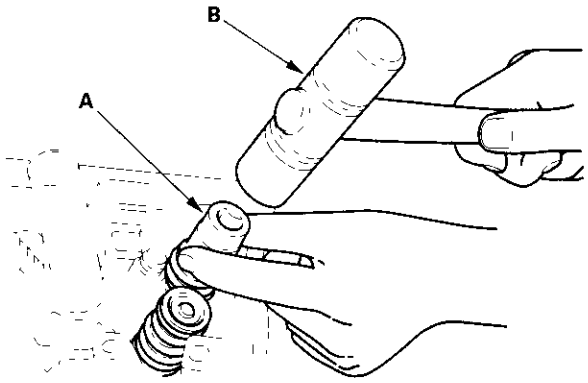


3. Install the spring compressor. Compress the spring and remove the valve keepers.

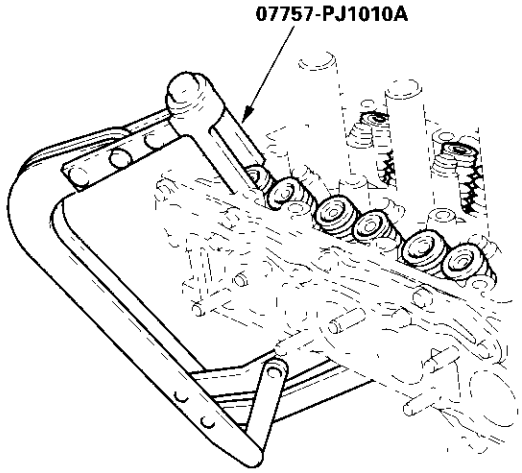


4. Install the valve guide seal remover.

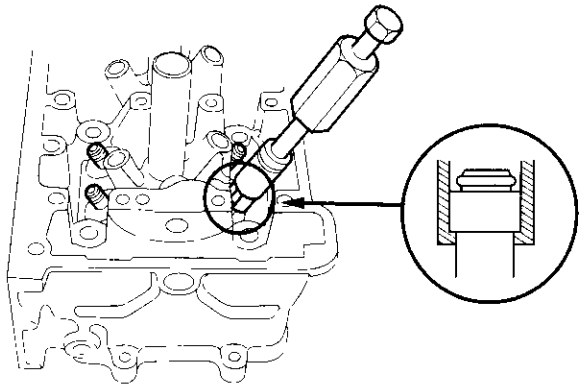

5. Remove the valve seal.

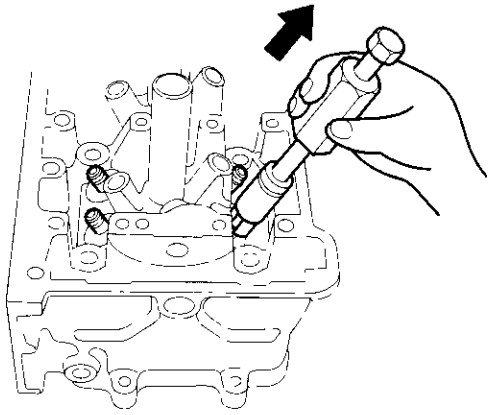

## Valve Inspection

1. Remove the valves (see page 6-38).

2. Measure the valve in these areas.

**Intake Valve Dimensions**
**A Standard (New): 35.90 – 36.10 mm (1.413 – 1.421 in.)**
**B Standard (New): 108.85 – 109.15 mm (4.285 – 4.297 in.)**
**C Standard (New): 5.48 – 5.49 mm (0.2157 – 0.2161 in.)**
**C Service Limit: 5.45 mm (0.215 in.)**
**D Standard (New): 0.55 – 0.85 mm (0.022 – 0.033 in.)**
**D Service Limit: 0.40 mm (0.016 in.)**

**Exhaust Valve Dimensions**
**A Standard (New): 30.90 – 31.10 mm (1.217 – 1.224 in.)**
**B Standard (New): 107.60 – 107.90 mm (4.236 – 4.248 in.)**
**C Standard (New): 5.45 – 5.46 mm (0.2146 – 0.2150 in.)**
**C Service Limit: 5.42 mm (0.213 in.)**
***D Standard (New): 0.85 – 1.15 mm (0.033 – 0.045 in.)***
**D Service Limit: 0.70 mm (0.028 in.)**

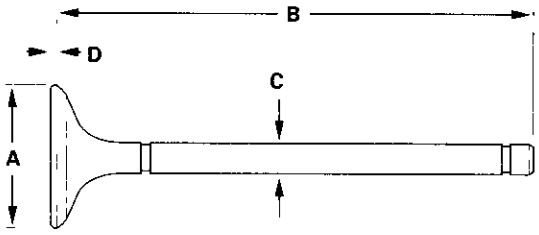


## Valve Stem-to-Guide Clearance Inspection

1. Remove the valves (see page 6-38).

2. Slide the valve out of its guide about 10 mm, then measure the guide-to-stem clearance with a dial indicator while rocking the stem in the direction of normal thrust (wobble method).

   - If the measurement exceeds the service limit, recheck it using a new valve.
   - If the measurement is now within the service limit, reassemble using a new valve.
   - If the measurement with a new valve still exceeds the service limit, go to step 3.

**Intake Valve Stem-to-Guide Clearance:**
**Standard (New): 0.04 – 0.10 mm (0.002 – 0.004 in.)**
**Service Limit: 0.16 mm (0.006 in.)**

**Exhaust Valve Stem-to-Guide Clearance:**
**Standard (New): 0.10 – 0.16 mm (0.004 – 0.006 in.)**
***Service Limit: 0.22 mm (0.009 in.)***

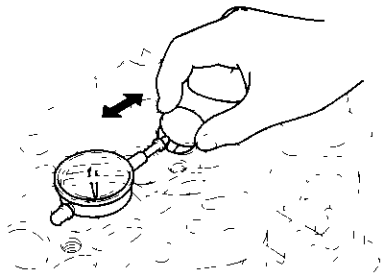

3. Subtract the O.D. of the valve stem, measured with a micrometer, from the I.D. of the valve guide, measured with an inside micrometer or ball gauge. Take the measurements in three places along the valve stem and three places inside the valve guide. The difference between the largest guide measurement and the smallest stem measurement should not exceed the service limit.

**Intake Valve Stem-to-Guide Clearance:**
**Standard (New): 0.02 – 0.05 mm (0.001 – 0.002 in.)**
**Service Limit: 0.08 mm (0.003 in.)**

**Exhaust Valve Stem-to-Guide Clearance:**
**Standard (New): 0.05 – 0.08 mm (0.002 – 0.003 in.)**
**Service Limit: 0.11 mm (0.004 in.)**

## Valve Guide Replacement

**Special Tools Required**
- Valve guide driver, 5.5 mm 07742-0010100
- Valve guide reamer, 5.5 mm 07HAH-PJ7010B

1. Inspect valve stem-to-guide clearance (see page 6-39).

2. As illustrated below, use a commercially available air-impact valve guide driver (A) modified to fit the diameter of the valve guides. In most cases, the same procedure can be done using the special tool and a conventional hammer.

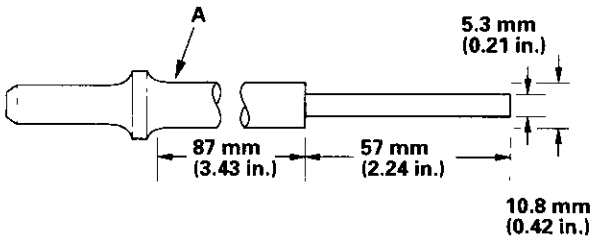


3. Select the proper replacement guides, and chill them in the freezer section of a refrigerator for about an hour.

4. Use a hot plate or oven to evenly heat the cylinder head to 300°F (150°C). Monitor the temperature with a cooking thermometer. Do not get the head hotter than 300°F (150°C); excessive heat may loosen the valve seats.

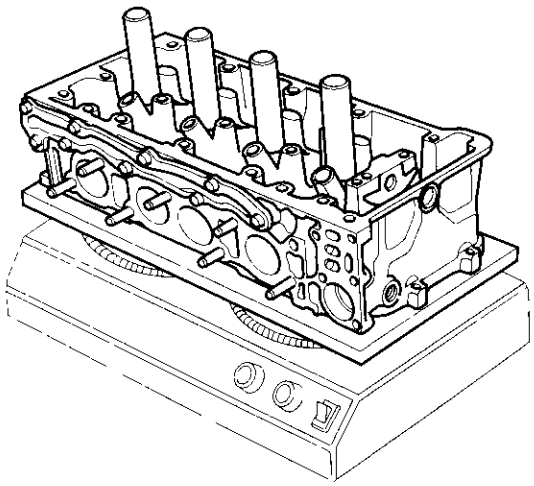

5. Working from the camshaft side, use the driver and an air hammer to drive the guide about 2 mm (0.1 in.) towards the combustion chamber. This will knock off some of the carbon and make removal easier. Hold the air hammer directly in line with the valve guide to prevent damaging the driver.

6. Turn the head over and drive the guide out toward the camshaft side of the head.

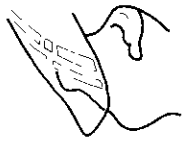

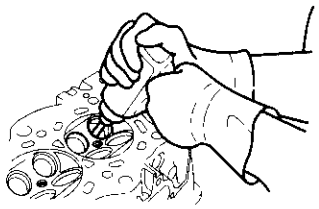



7. If a valve guide won't move, drill it out with a 8 mm (5/16 inch) bit, then try again. Drill guides only in extreme cases; you could damage the cylinder head if the guide breaks.

8. Remove the new guide(s) from the freezer, one at a time, as you need them.

9. Apply a thin coat of clean engine oil to the outside of the new valve guide. Install the guide from the camshaft side of the head; use the special tool to drive the guide in to the specified installed height (A) of the guide (B). If you have all 16 guides to do, you may have to reheat the head.

**Valve Guide Installed Height:**
**Intake: 15.2–16.2 mm (0.598–0.638 in.)**
**Exhaust: 16.0–17.0 mm (0.630 - 0.669 in.)**

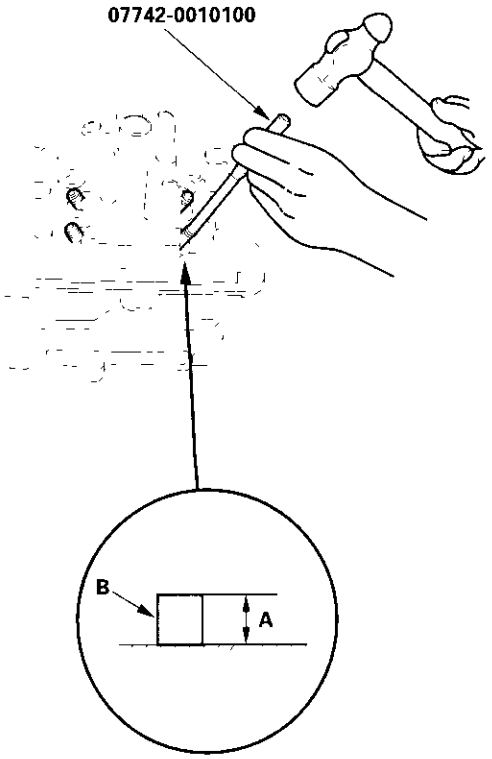


10. Coat both reamer and valve guide with cutting oil.

11. Rotate the reamer clockwise the full length of the valve guide bore.

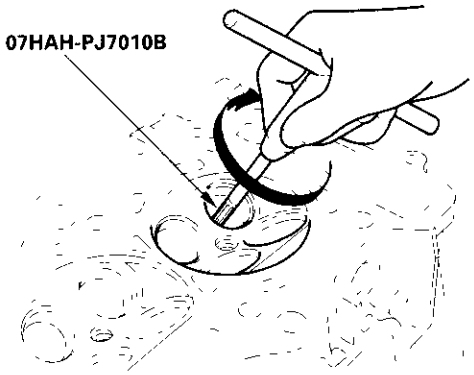


12. Continue to rotate the reamer clockwise while removing it from the bore.

13. Thoroughly wash the guide in detergent and water to remove any cutting residue.

14. Check the clearances with a valve (see page 6-39). Verify that a valve slides in the intake and exhaust valve guides without exerting pressure.

## Valve Seat Reconditioning

1. Inspect valve stem-to-guide clearance (see page 6-39). If the valve guides are worn, replace them (see page 6-40) before cutting the valve seats.

2. Renew the valve seats in the cylinder head using a valve seat cutter.

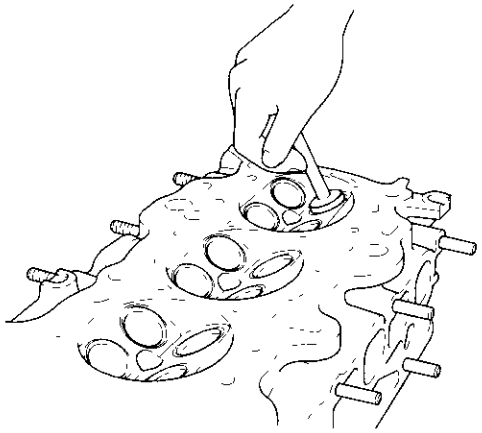

3. Carefully cut a 45° seat, removing only enough material to ensure a smooth and concentric seat.

4. Bevel the upper and lower edges at the angles shown in the illustration.
Check the width of the seat and adjust accordingly.

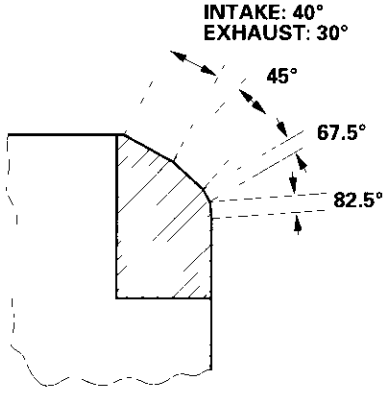


5. Make one more very light pass with the 45° cutter to remove any possible burrs caused by the other cutters.

**Valve Seat Width:**
**Intake:**
**Standard (New): 1.05 – 1.35 mm (0.041 – 0.053 in.)**
**Service Limit: 1.80 mm (0.071 in.)**
**Exhaust:**
**Standard (New): 1.25 – 1.55 mm (0.049 – 0.061 in.)**
**Service Limit: 2.00 mm (0.079 in.)**

6. After resurfacing the seat, inspect for even valve seating: Apply Prussian Blue compound (A) to the valve face. Insert the valve in its original location in the head, then lift it and snap it closed against the seat several times.

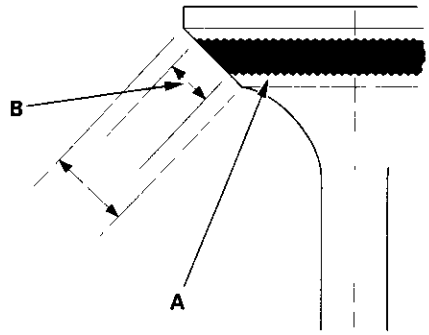


7. The actual valve seating surface (B), as shown by the blue compound, should be centered on the seat.

- If it is too high (closer to the valve stem), you must make a second cut with the 67.5 ° cutter to move it down, then one more cut with the 45 ° cutter to restore seat width.
- If it is too low (close to the valve edge), you must make a second cut with the 40° cutter (intake side) or the 30° cutter (exhaust side) to move it up, then make one more cut with the 45° cutter to restore seat width.

NOTE: The final cut should always be made with the 45° cutter.

8. Insert the intake and exhaust valves in the head and measure valve stem installed height (A).

**Intake Valve Stem Installed Height:**
**Standard (New): 44.1 – 44.4 mm (1.736 – 1.748 in.)**
**Service Limit: 44.7 mm (1.760 in.)**

**Exhaust Valve Stem Installed Height:**
**Standard (New): 44.2 – 44.5 mm (1.740 – 1.752 in.)**
**Service Limit: 44.8 mm (1.764 in.)**

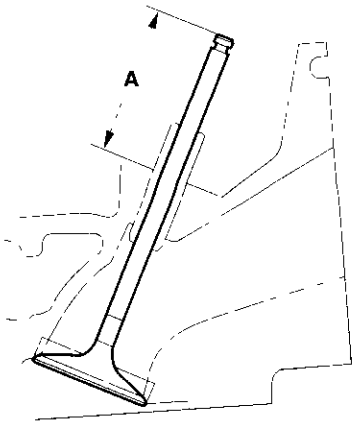


9. If valve stem installed height is over the service limit, replace the valve and recheck. If it is still over the service limit, replace the cylinder head; the valve seat in the head is too deep.

## Valves, Springs, and Valve Seals Installation

**Special Tools Required**
Valve spring compressor attachment 07757-PJ1010A

1. Coat the valve stems with engine oil. Install the valves in the valve guides.
2. Check that the valves move up and down smoothly.
3. Install the spring seats on the cylinder head.
4. Install the new valve seals (A) using the valve guide seal installer (B).

   NOTE: The exhaust valve seal (C) has a black spring (D), and the intake valve seal (E) has a white spring (F). They are not interchangeable.

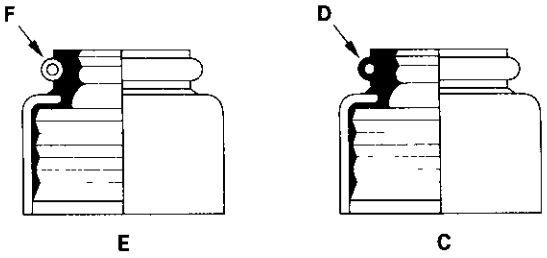


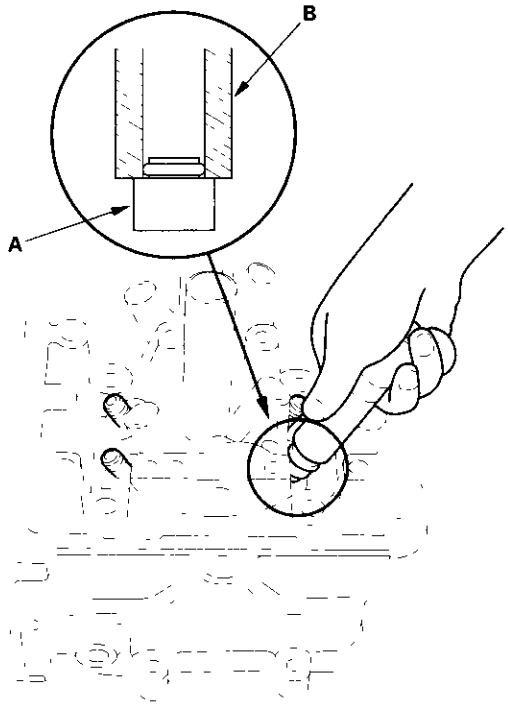


5. Install the valve spring and valve retainer. Place the end of the valve spring with closely wound coils toward the cylinder head.
6. Install the valve spring compressor. Compress the spring and install the valve keepers.

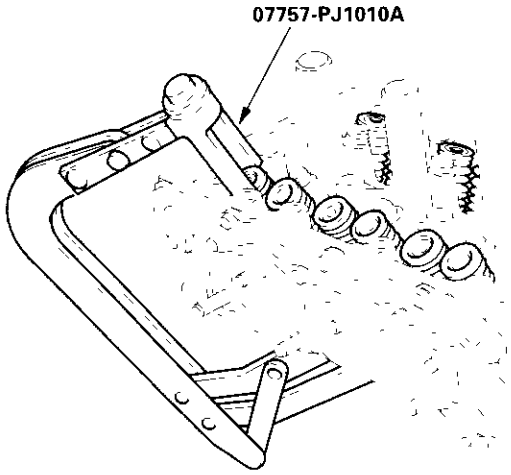


7. Lightly tap the end of each valve stem two or three times with a plastic mallet (A) to ensure proper seating of the valve and valve keepers. Tap the valve stem only along its axis so you do not bend the stem.

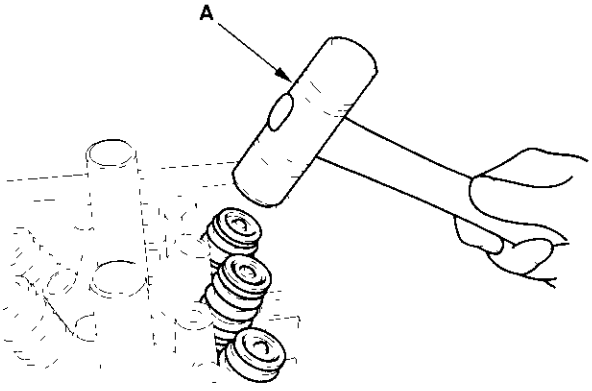

## Camshaft Gear Installation

1. Install the camshaft gear (A).

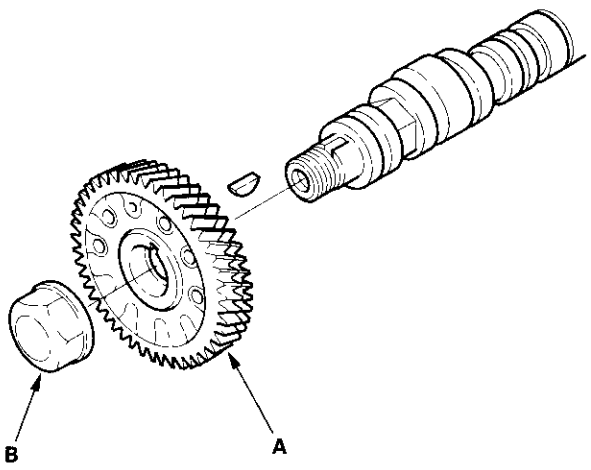


2. Apply engine oil to the threads of the camshaft gear mounting nut (B), then install it.

3. Hold the camshaft with an open-end wrench, then tighten the camshaft gear mounting nut.

**Specified torque:**
**118 N·m (12.0 kgf·m, 86.8 lbf·ft)**

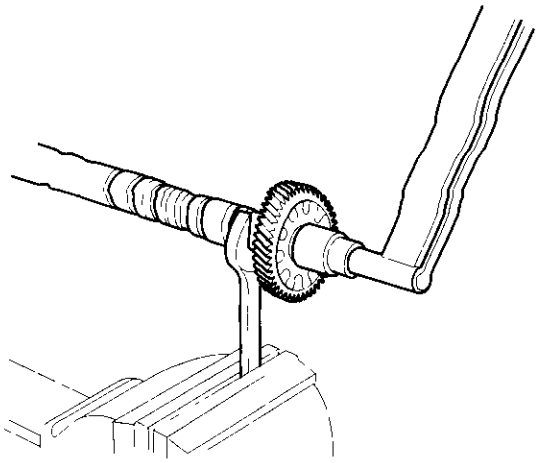

## Cylinder Head Installation

1. Measure the diameter of each cylinder head bolt at point A and point B. If either diameter is less than 11.5 mm (0.45 in.), replace the cylinder head bolt.

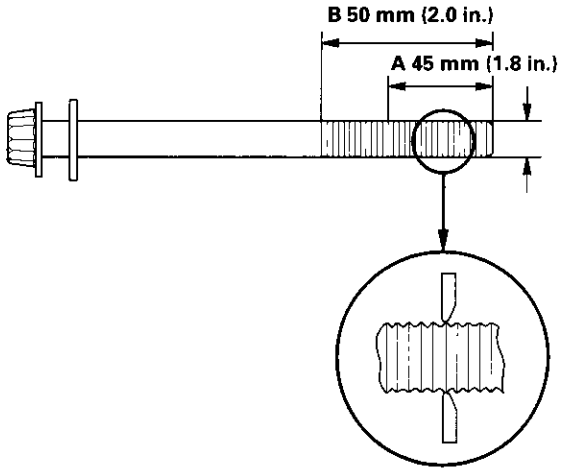


2. Clean the cylinder head and block surfaces.

3. Apply liquid gasket, part No. 08718-0009, to the shaded areas (A) of the cylinder head gasket mating surface of the block and chain case.

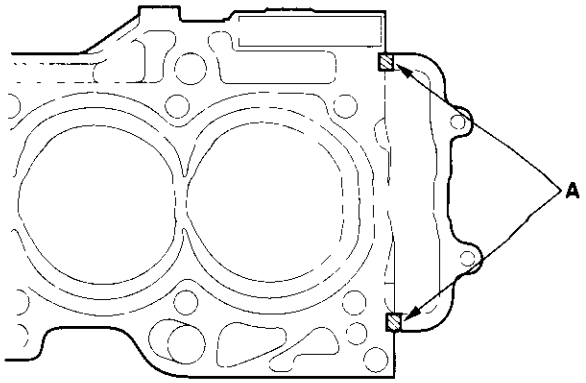


(cont'd)

## Cylinder Head Installation (cont'd)

4. Install the dowel pins (A) and the new cylinder head gasket (B).

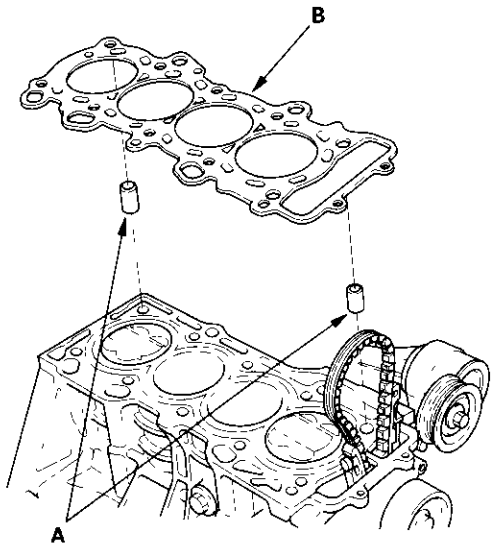


5. Apply liquid gasket, part No. 08718-0009, to the cylinder head mating surface of the block and chain case within 5 mm of the edge of the cylinder head gasket.

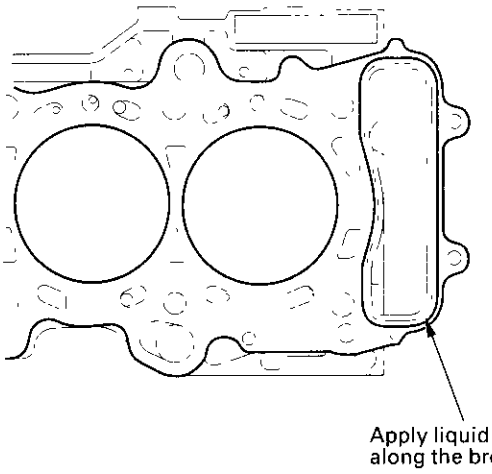


6. Install the cylinder head on the block.

7. Apply engine oil to the threads and under the heads of all the cylinder head bolts.

8. Tighten the cylinder head bolts in sequence to 29 N·m (3.0 kgf·m, 22 lbf·ft). Use a beam-type torque wrench. When using a preset-type torque wrench, be sure to tighten slowly and do not overtighten. If a bolt makes any noise while you are torquing it, loosen the bolt and retighten it.

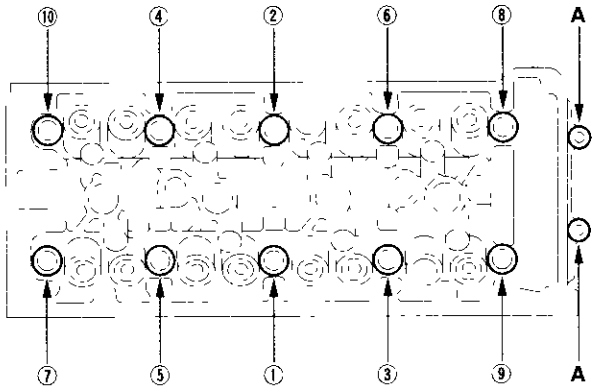


9. Tighten all cylinder head bolts in two steps (90° per step). If you are using a new cylinder head bolt, tighten the bolt an extra 90°.

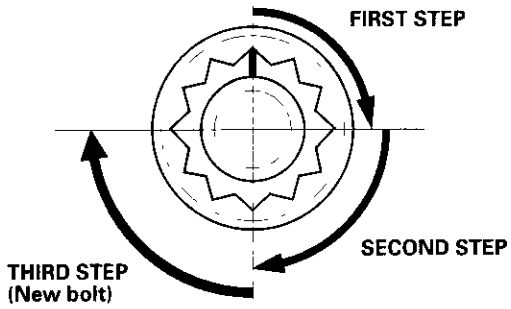


10. Tighten the 8 mm bolts (A) to 22 N·m (2.2 kgf·m, 16 lbf·ft).

11. Make sure the crankshaft pulley is at top dead center (TDC). Align the TDC mark (A) on the crankshaft pulley with the pointer (B) on the chain case.

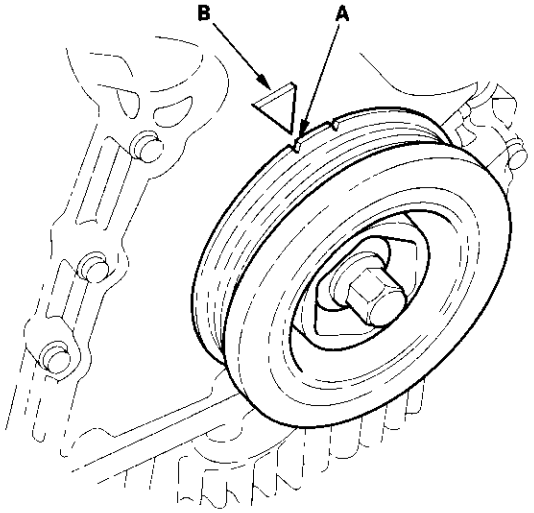


12. Assemble the idler gear (A) and cam chain sprocket (B) with three mounting bolts (C). Torque the bolts to 14 N·m (1.4 kgf·m, 10 lbf·ft).

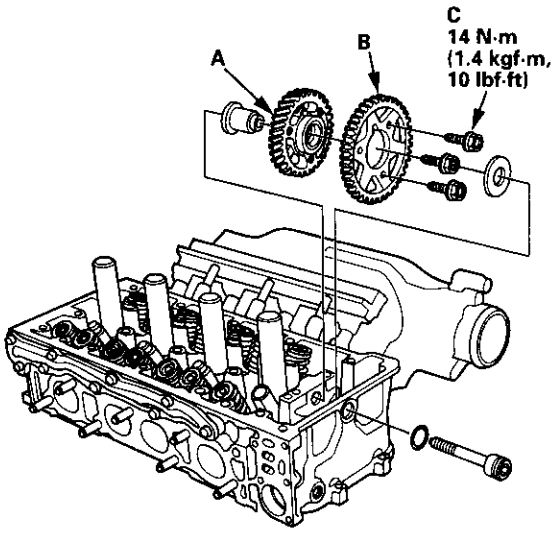


13. Place the assembly into the cylinder head.

14. Install the cam chain on the sprocket, then fit the idler gear collar into the cylinder head.

15. Turn the idler gear counterclockwise to relieve cam chain free play, and check the alignment of the TDC marks (A) on the cam chain sprocket with the cylinder head surface. If the cam chain sprocket is not positioned at TDC, remove the idler gear from the cylinder head and reposition the cam chain to bring the cam chain sprocket to TDC.

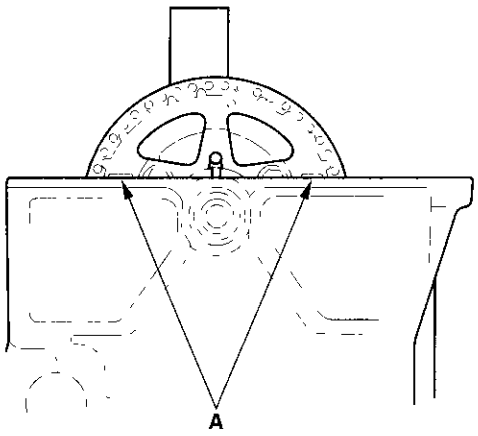


16. Apply engine oil to the idler gear/cam chain sprocket center bolt threads (A). Install a new O-ring (C) on the bolt.

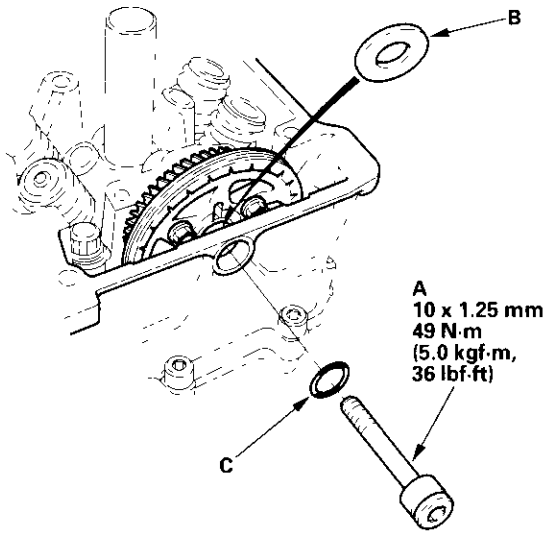


17. Install the washer (B) on the cam chain sprocket, and tighten the center bolt.

(cont'd)

## Cylinder Head Installation (cont'd)

18. Clamp the cam chain auto-tensioner in a soft-jawed vise.

19. Turn the 5 x 0.8 mm bolt (A) clockwise to compress the bottom of the auto-tensioner, then insert the set pin (B), P/N 14511-PCX-005.

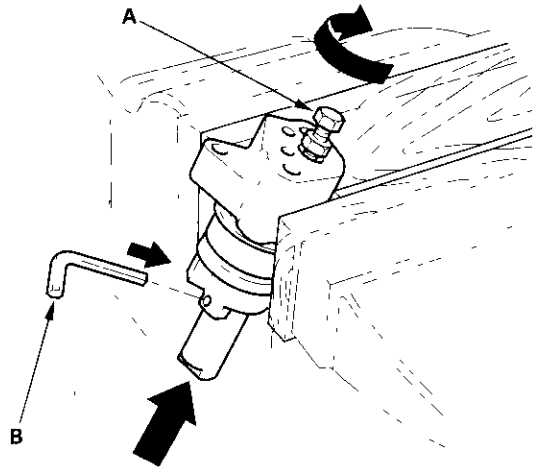


20. Remove the 5 x 0.8 mm bolt from the maintenance hole. Install a new O-ring (A), then install the nozzle (B) and end cover (C).

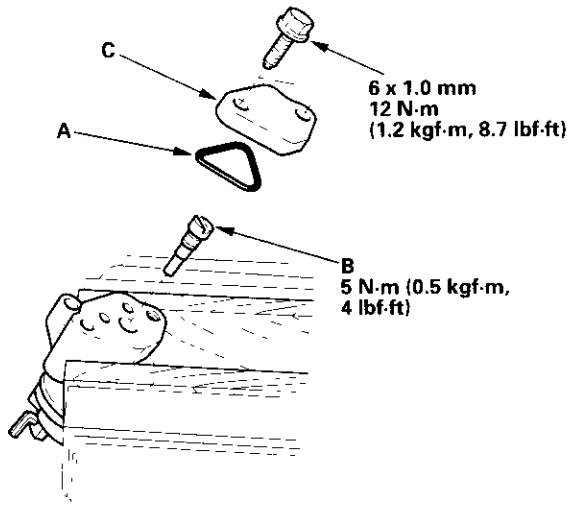


21. Install the cam chain auto-tensioner (A) in the cylinder head with new O-rings (B).

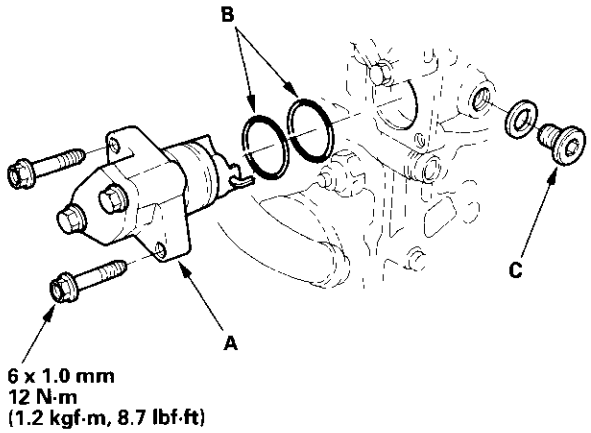


22. Remove the maintenance bolt (C) from the cylinder head.

23. Remove the set pin (A) from the cam chain auto-tensioner. Reinstall the maintenance bolt (B) with new washer (C).

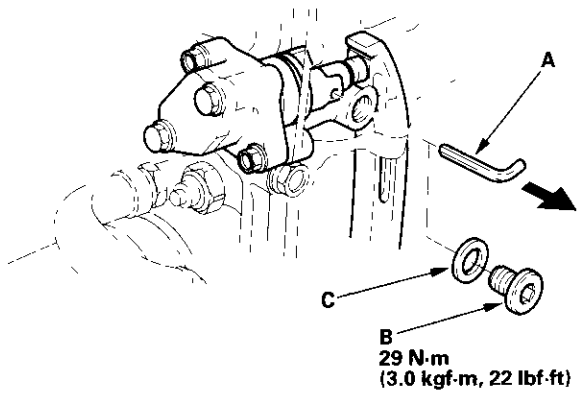

23. Install the rocker arm assembly.

24. Check the alignment of the TDC marks (A) on the cam chain sprocket with the cylinder head surface.

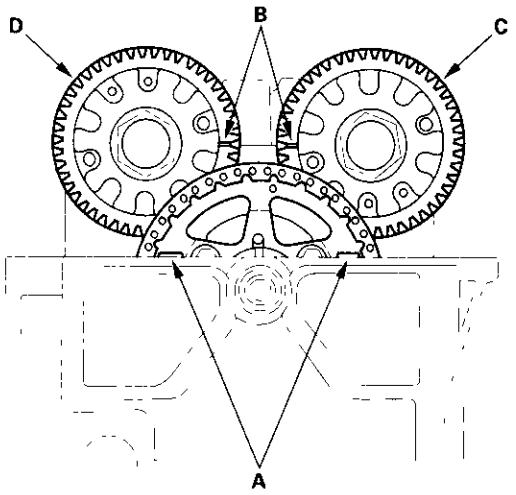


25. Align the TDC marks (B) on the intake camshaft gear (C) and the exhaust camshaft gear (D), and install the camshafts.

26. Apply engine oil to the bolt threads of all the camshaft holder bolts.

27. Put the camshaft holders on the cylinder head, then tighten all bolts to 22 N·m (2.2 kgf·m, 16 lbf·ft).

**Cylinder Head Bolts Torque Sequence:**

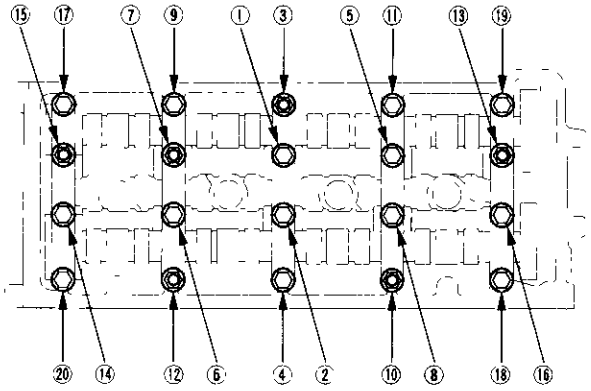


28. Make sure the camshaft gears are at TDC.

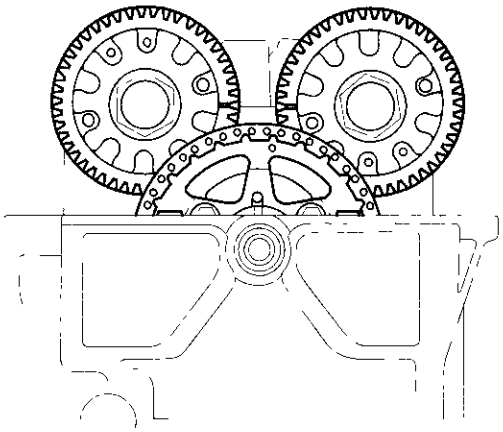

29. Adjust the valve clearance (see page 6-12).

30. Install the cylinder head cover (see page 6-53).

(cont'd)

## Cylinder Head Installation (cont'd)

31. Install the exhaust manifold (A) using new gaskets (B) and new self-locking nuts (C).

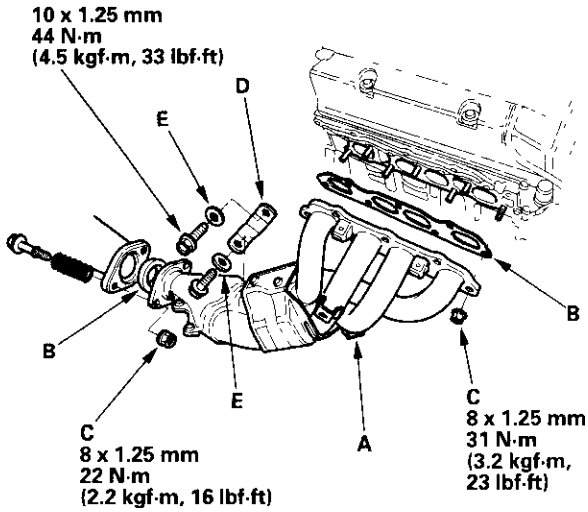


32. Install the exhaust manifold bracket (D). Make sure the smooth sides of the washers (E) face the exhaust manifold bracket.

33. Put the exhaust manifold cover on the exhaust manifold.

34. Install the heat shield.

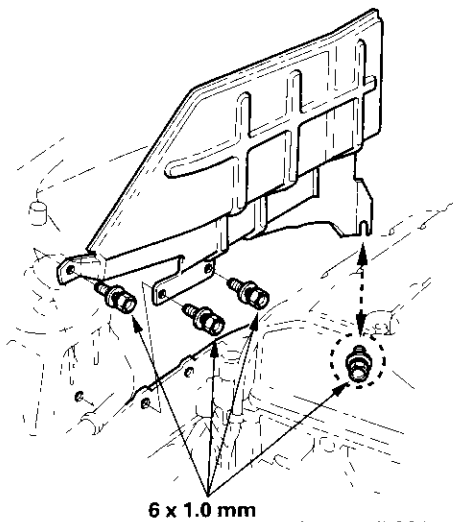


35. Tighten the four bolts securing the exhaust manifold cover.

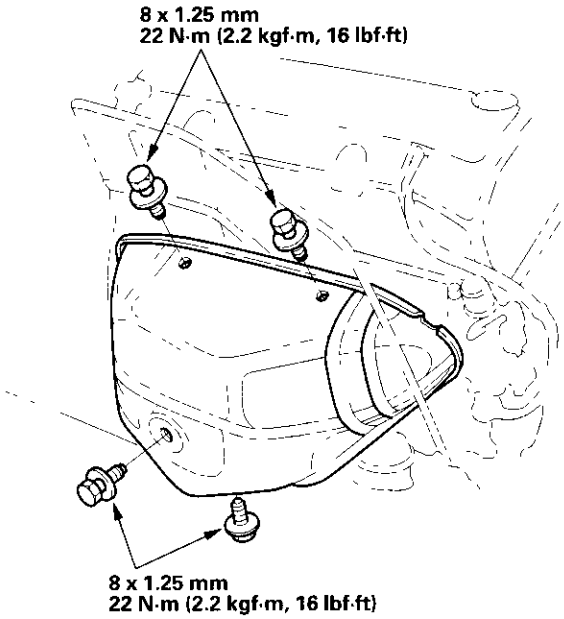

36. Install the intake manifold (A) with a new gasket (B).

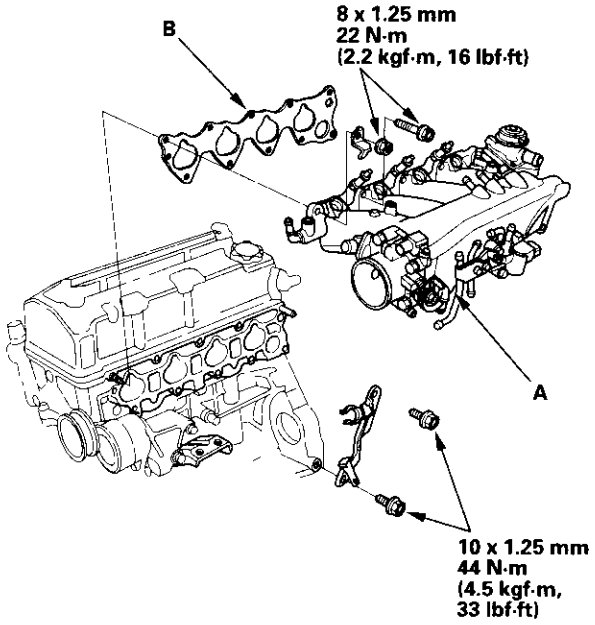


37. Install the water bypass hose (A), and tighten the two bolts (B) securing the intake manifold bracket.

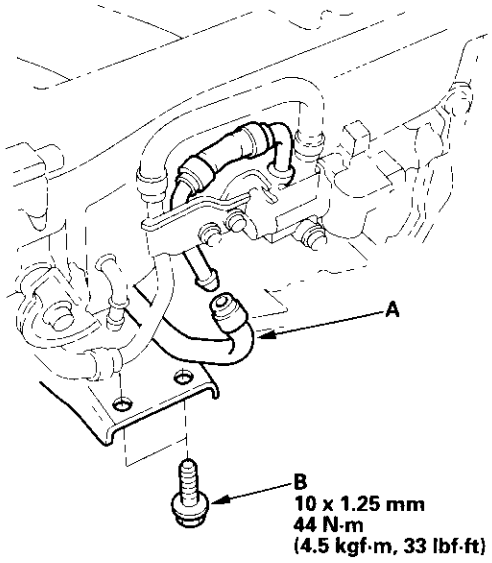


38. Install the water outlet cover (A) with a new O-ring (B).

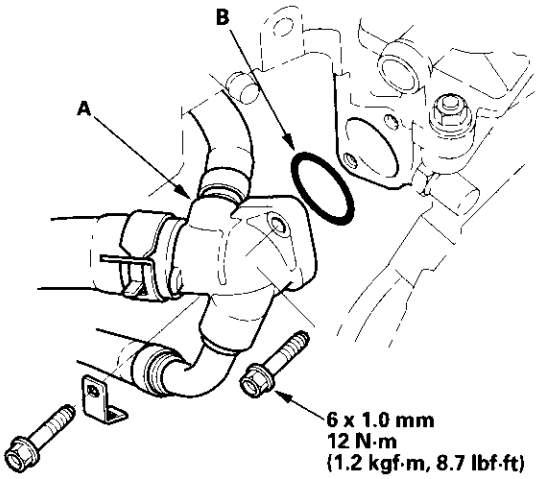


(cont'd)

## Cylinder Head Installation (cont'd)

39. Install the air hose (A), and tighten the bolt (B) securing the intake manifold bracket.

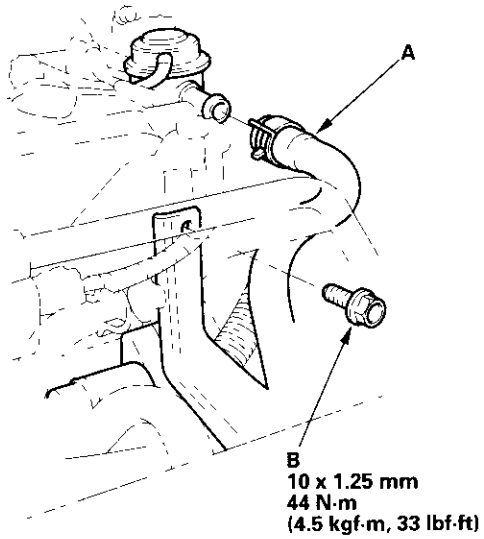


40. Install the evaporative emission (EVAP) control canister hose.

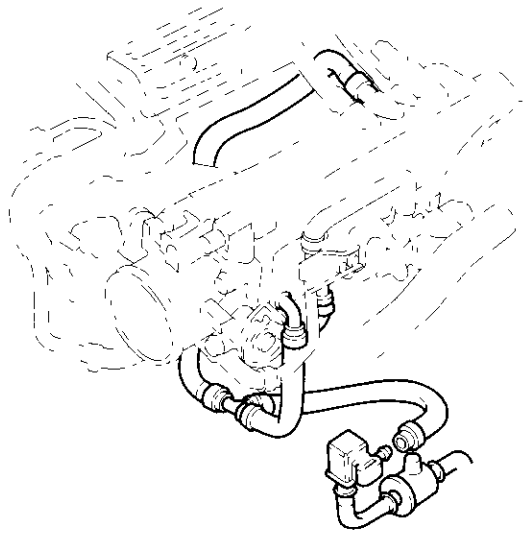

41. Install the brake booster vacuum hose (A), fuel return hose (B) and fuel feed hose (C), using new washers (D).

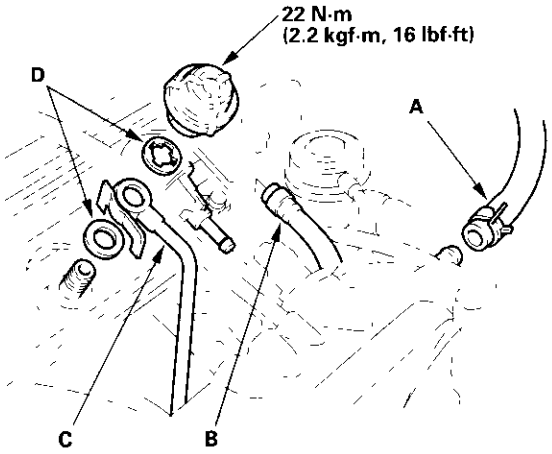


42. Install the alternator-compressor belt.

43. Install the air cleaner housing/intake air duct assembly (A), then install the vacuum hoses (B). Connect the air control solenoid valve connector (C).

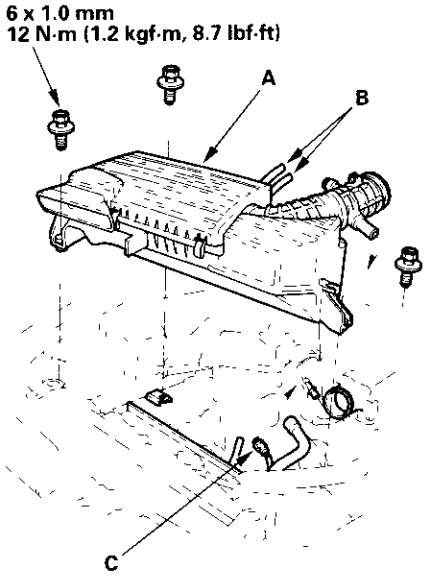

44. Install the throttle cable (see page 11-125), then adjust the cable (see page 11-124).

45. After installation, check that all tubes, hoses and connectors are installed correctly.

46. After assembly, wait at least 30 minutes before filling the engine with oil (see page 8-5).

47. Refill the radiator with engine coolant, and bleed air from the cooling system with the heater valve open (see page 10-8).

48. Connect the negative battery cable first, then connect the positive cable.

49. Inspect for fuel leaks. Turn the ignition switch ON (II) (do not operate the starter) so that the fuel pump runs for about 2 seconds and pressurizes the fuel line. Repeat this operation two or three times, then check for fuel leakage at any point in the fuel line.

50. Perform the engine control module (ECM) idle learn procedure (see page 11-100).

51. Inspect the idle speed (see page 11-100).

52. Inspect the ignition timing (see page 4-18).

53. Enter the anti-theft code for the radio, then enter the customer's radio station presets.

54. Set the clock.

## Cylinder Head Cover Installation

1. Install the head cover gasket in the groove of the cylinder head cover.

2. Set the spark plug seal (A) on the spark plug tube. Install the cylinder head cover (B) on the cylinder head.

   NOTE:
   - Take care not to damage the spark plug seals when installing the cylinder head cover.
   - Visually inspect the spark plug seals for damage.

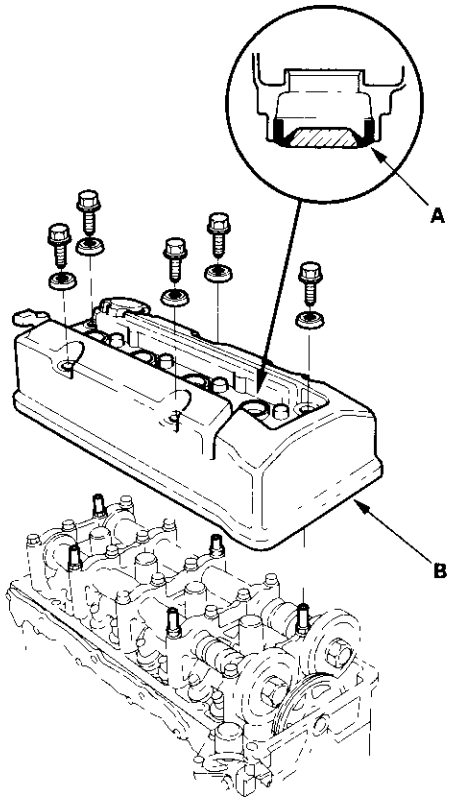


(cont'd)

## Cylinder Head Cover Installation (cont'd)

3. Inspect the cylinder head cover washers. Replace any washers and rubber seals that are damaged or deteriorated.
4. Clean the washer mating surfaces of the cylinder head cover.
5. Install the head cover washers (A).

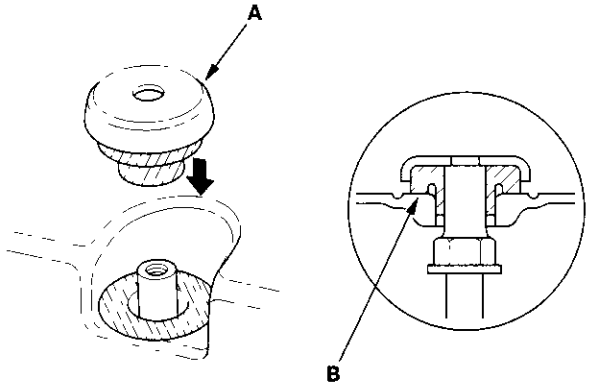


6. Make sure the rubber seals (B) are securely seated on the cylinder head cover.
7. Tighten the bolts in two or three steps. In the final step, tighten all bolts, in sequence, to 12 N·m (1.2 kgf· m, 8.7 lbf·ft).

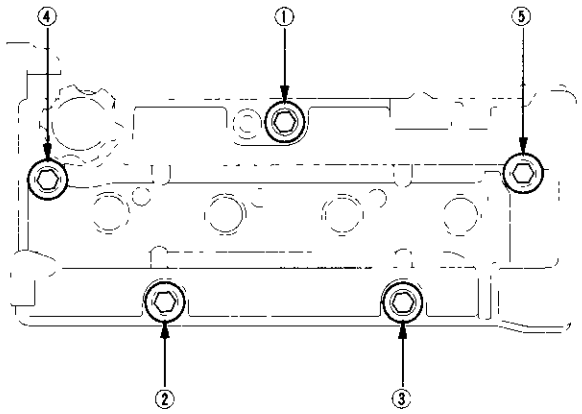


8. Install the ignition coils (A), then install the ignition coil cover (B).

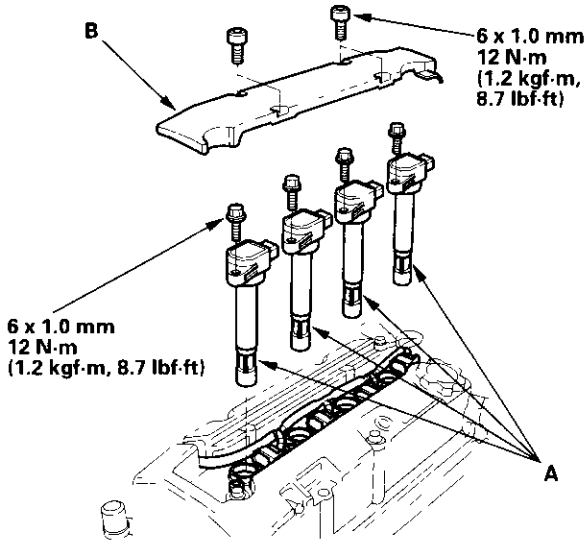


9. Install the positive crankcase ventilation (PCV) hose (A) and breather hose (B), then insert the dipstick (C).

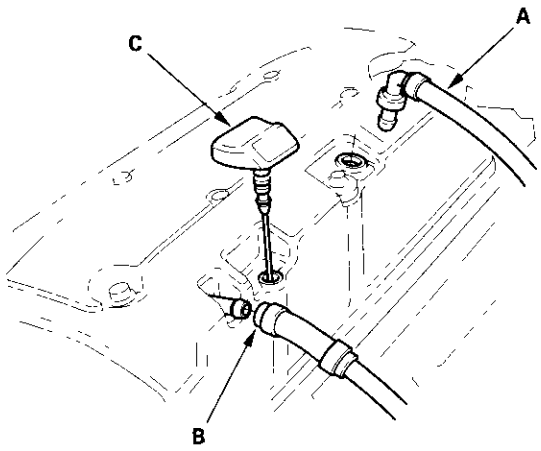


10. After assembly, wait at least 30 minutes before filling the engine with oil (see page 8-5).

# Engine Mechanical



## Engine Block


Special Tools ..... 7-2
Component Location Index ..... 7-3
Flywheel Removal and Installation ..... 7-5
Connecting Rod and Crankshaft End Play Inspection ..... 7-6
Crankshaft Main Bearing Replacement ..... 7-7
Connecting Rod Bearing Replacement ..... 7-9
Crankshaft and Pistons Removal ..... 7-11
Crankshaft Inspection ..... 7-13
Block and Piston Inspection ..... 7-14
Cylinder Honing ..... 7-16
Piston, Pin and Connecting Rod Replacement ..... 7-17
Piston Ring Replacement ..... 7-20
Piston Installation ..... 7-22
Crankshaft Installation ..... 7-24
Pulley End Crankshaft Seal Installation-In Car ..... 7-26
Transmission End Crankshaft Seal Installation-In Car ..... 7-26

## Special Tools

| Ref.No. | Tool Number | Description | Qty |
|---|---|---|---|
| ① | 07LAB-PV00100 | Ring Gear Holder | 1 |
| ② | 07LAD-PT3010A | Seal Driver | 1 |
| ③ | 07749-0010000 | Driver | 1 |
| ④ | 07948-SB00101 | Driver Attachment | 1 |

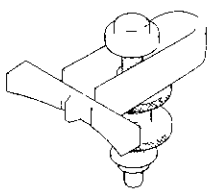

①



②

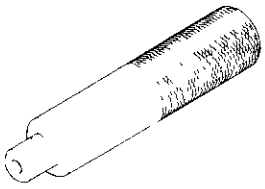

③

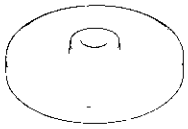

④

## Component Location Index

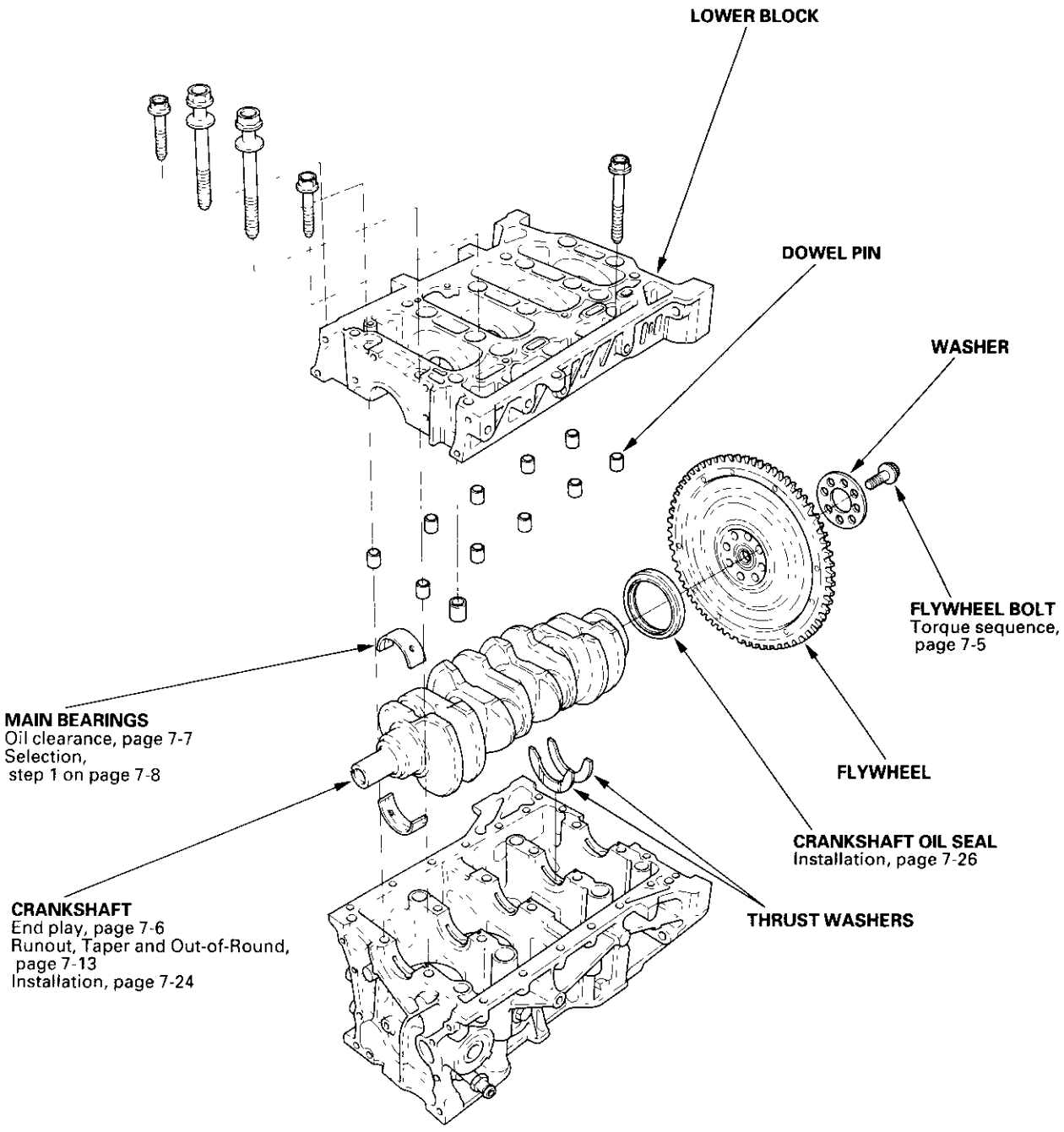


(cont'd)

## Component Location Index (cont'd)

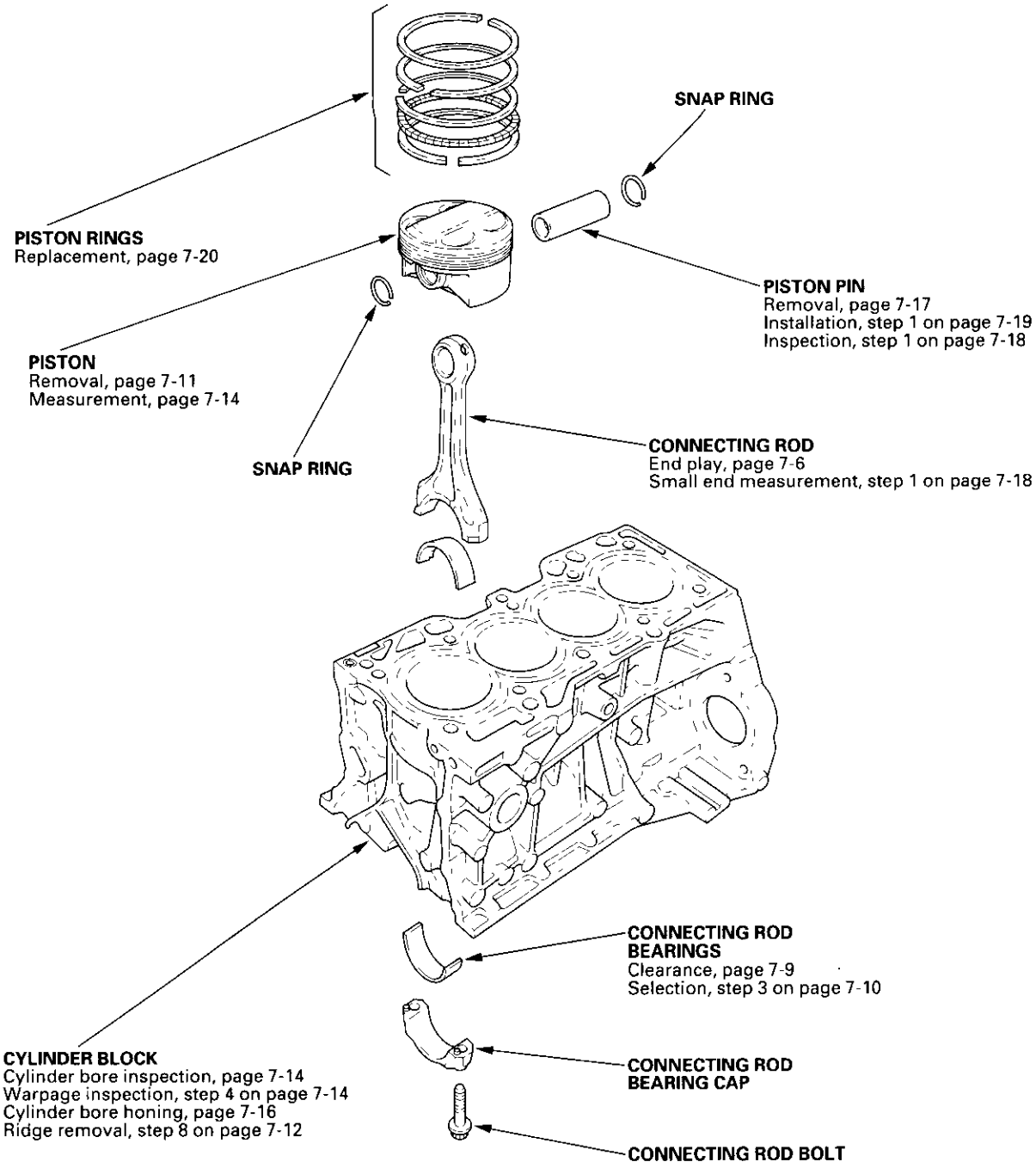

# Flywheel Removal and Installation

**Special Tools Required**
Ring gear holder 07LAB-PV00100

1. Remove the transmission (see page 13-5).
2. Remove the pressure plate and clutch disk (see page 12-7).
3. Remove the eight flywheel bolts, then separate the flywheel from the crankshaft flange. After installation, tighten the bolts in the sequence shown.

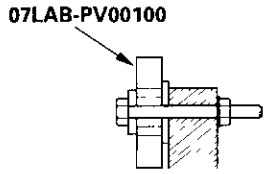


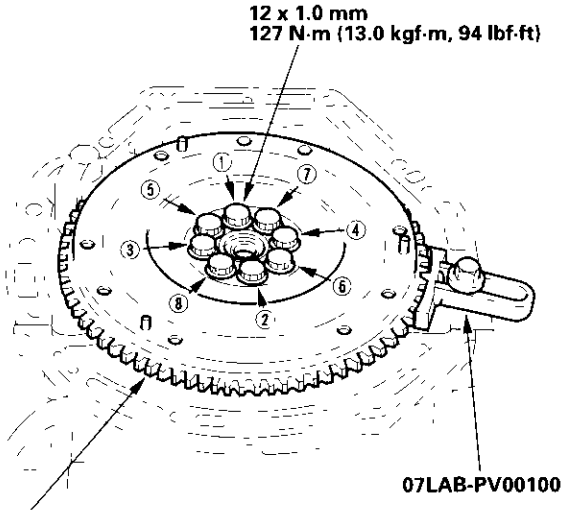


4. Install the clutch disk and pressure plate (see page 12-11).
5. Install the transmission (see page 13-66).

## Connecting Rod and Crankshaft End Play Inspection

1. Remove the oil pump (see page 8-9).

2. Measure the connecting rod end play with a feeler gauge between the connecting rod and crankshaft.

   **Connecting Rod End Play:**
   **Standard (New): 0.15–0.30 mm (0.006–0.012 in.)**
   **Service Limit: 0.40 mm (0.016 in.)**

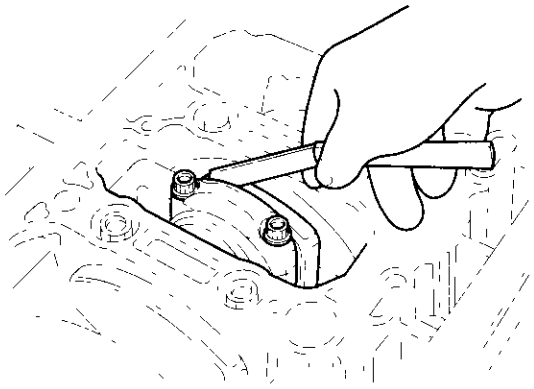

3. If the connecting rod end play is out-of-tolerance, install a new connecting rod, and recheck. If it is still out-of-tolerance; replace the crankshaft (see page 7-11).

4. Push the crankshaft firmly away from the dial indicator, and zero the dial against the end of the crankshaft. Then pull the crankshaft firmly back toward the indicator; the dial reading should not exceed the service limit.

   **Crankshaft End Play:**
   **Standard (New): 0.10–0.35 mm (0.004–0.014 in.)**
   **Service Limit: 0.45 mm (0.018 in.)**

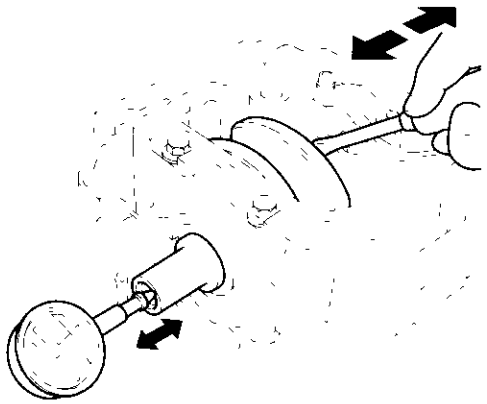

5. If the end play is excessive, replace the thrust washers and recheck. If it is still out-of-tolerance, replace the crankshaft.

# Crankshaft Main Bearing Replacement

## Main Bearing Clearance Inspection

1. To check main bearing-to-journal oil clearance, remove the lower block and bearing halves. (see page 7-11).

2. Clean each main journal and bearing half with a clean shop towel.

3. Place one strip of plastigage across each main journal.

   NOTE: If the engine is still in the vehicle when you bolt the lower block down to check clearance, the weight of the crankshaft and flywheel will flatten the plastigage further than just the torque on the cap bolt and give you an incorrect reading. For an accurate reading, support the crank with a jack under the counterweights, and check only one bearing at a time.

4. Reinstall the bearings and lower block, then torque the bolts to 29 N·m (3.0 kgf·m, 22 lbf·ft) + 60°.

   NOTE: Do not rotate the crankshaft during inspection.

5. Remove the lower block and bearings again, and measure the widest part of the plastigage.

   **Main Bearing-to-Journal Oil Clearance:**
   **Standard (New): 0.017 – 0.041 mm**
   **(0.0007 – 0.0016 in.)**
   **Service Limit: 0.050 mm (0.0020 in.)**

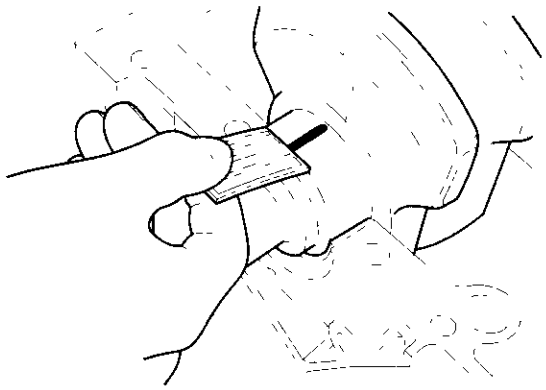

6. If the plastigage measures too wide or too narrow, (remove the engine if it's still in the vehicle), remove the crankshaft, and remove the upper half of the bearing. Install a new, complete bearing with the same color code(s), and recheck the clearance. Do not file, shim, or scrape the bearings or the caps to adjust clearance.

7. If the plastigage shows the clearance is still incorrect, try the next larger or smaller bearing (the color listed above or below that one), and check again. If the proper clearance cannot be obtained by using the appropriate larger or smaller bearings, replace the crankshaft and start over.

(cont'd)

## Crankshaft Main Bearing Replacement (cont'd)

### Main Bearing Selection

#### Crankshaft Bore Code Location

1. Numbers or letters or bars have been stamped on the end of the block as a code for the size of each of the 5 main journal bores. Write down the crank bore codes.
   If you can't read the codes because of accumulated dirt and dust, do not scrub them with a wire brush or scraper. Clean them only with solvent or detergent.

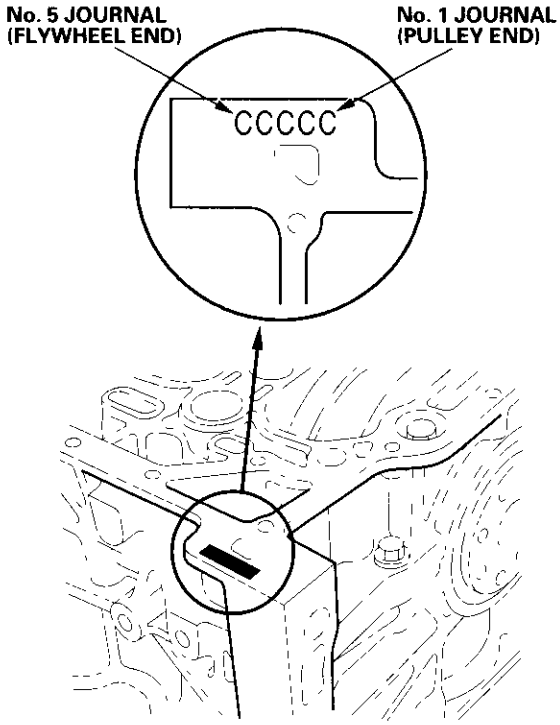


#### Main Journal Code Location

2. The main journal codes are stamped on the No. 1 web.

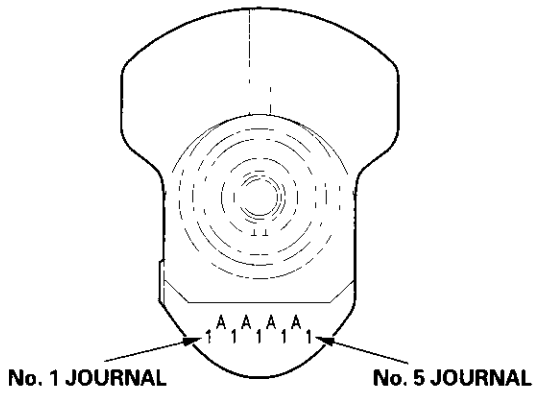


3. Use the crank bore codes and crank journal codes to select the appropriate replacement bearings from the following table.

   NOTE:
   - Color code is on the edge of the bearing.
   - When using bearing halves of different colors, it does not matter which color is used in the top or bottom.

| Main journal code (Smaller main journal ↓) | Crank bore code: 1 or A or I (Larger crank bore →) | 2 or B or II | 3 or C or III | 4 or D or IIII (Smaller bearing (Thicker) →) |
|---|---|---|---|---|
| 1 or I | Pink/ Yellow | Yellow | Yellow/ Green | Green |
| 2 or II | Yellow | Yellow/ Green | Green | Green/ Brown |
| 3 or III | Yellow/ Green | Green | Green/ Brown | Brown |
| 4 or IIII | Green | Green/ Brown | Brown | Brown/ Black |
| 5 or IIIII | Green/ Brown | Brown | Brown/ Black | Black |
| 6 or IIIIII (Smaller bearing (Thicker) ↓) | Brown | Brown/ Black | Black | Black/ Blue |

# Connecting Rod Bearing Replacement

## Rod Bearing Clearance Inspection

1. Remove the connecting rod cap and bearing half (see page 7-11).
2. Clean the crankshaft rod journal and bearing half with a clean shop towel.
3. Place plastigage across the rod journal.
4. Reinstall the bearing half and cap, and torque the bolt to 25 N·m (2.5 kgf·m, 18 lbf·ft) + 90°.

   NOTE: Do not rotate the crankshaft during inspection.
5. Remove the rod cap and bearing half, and measure the widest part of the plastigage.

   **Connecting Rod Bearing-to-Journal Oil Clearance:**

   | | |
   |---|---|
   | **Standard (New):** | **0.030–0.054 mm (0.0012–0.0021 in.)** |
   | **Service Limit:** | **0.060 mm (0.0024 in.)** |

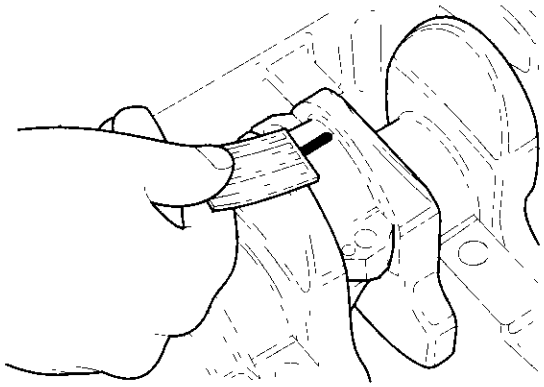

6. If the plastigage measures too wide or too narrow, remove the upper half of the bearing, install a new, complete bearing with the same color code(s), and recheck the clearance. Do not file, shim, or scrape the bearings or the caps to adjust clearance.
7. If the plastigage shows the clearance is still incorrect, try the next larger or smaller bearing (the color listed above or below that one), and check clearance again. If the proper clearance cannot be obtained by using the appropriate larger or smaller bearing, replace the crankshaft and start over.

## Rod Bearing Selection

1. Inspect each connecting rod for cracks and heat damage.

**Connecting Rod Big End Bore Code Locations**

2. Each rod has a tolerance range from 0 to 0.024 mm (0.0009 in.), in 0.006 mm (0.0002 in.) increments, depending on the size of its big end bore. It's then stamped with a number or bar (1, 2, 3 or 4/I, II, III, or IIII) indicating the range. You may find any combination of numbers and bars in any engine, (Half the number or bar is stamped on the bearing cap, the other half on the rod.).

   If you can't read the code because of an accumulation of oil and varnish, do not scrub it with a wire brush or scraper. Clean it only with solvent or detergent.

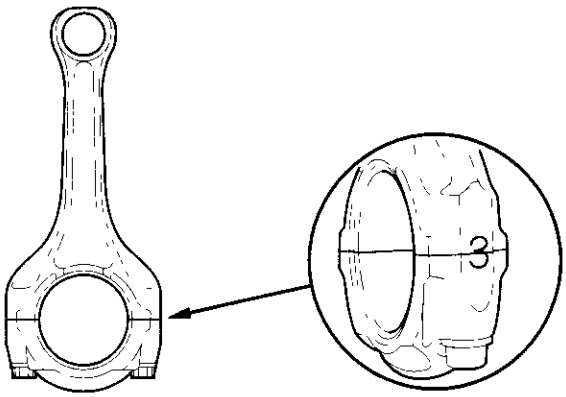


(cont'd)

## Connecting Rod Bearing Replacement (cont'd)

**Connecting Rod Journal Code Location**

3. The connecting rod journal codes are stamped on the No. 1 web.

**Connecting Rod Journal Code Location (Letters or Bars)**

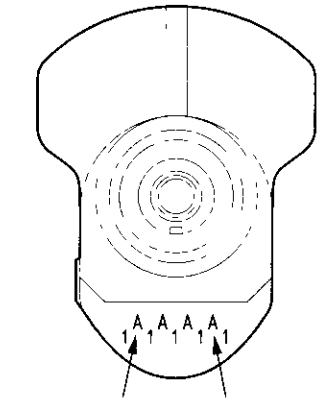


4. Use the big end bore codes and rod journal codes to select appropriate replacement bearings from the following table.

NOTE: Color code is on the edge of the bearing.

Big end bore code → Larger big end bore

Rod Journal code → Smaller bearing (Thicker)

| Rod Journal code | 1 or I | 2 or II | 3 or III | 4 or IIII |
|---|---|---|---|---|
| A or I | Red | Pink | Yellow | Green |
| B or II | Pink | Yellow | Green | Brown |
| C or III | Yellow | Green | Brown | Black |
| D or IIII | Green | Brown | Black | Blue |

Smaller rod journal

Smaller bearing (Thicker)

## Crankshaft and Piston Removal

1. Remove the cam chain (see page 6-15).
2. Remove the oil pump (see step 1 on page 8-9).
3. Remove the 8 mm bolts.

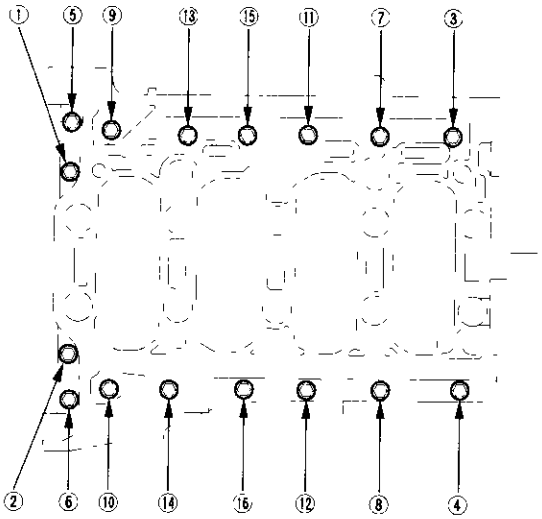


4. Remove the bearing cap bolts. To prevent warpage, unscrew the bolts in sequence 1/3 turn at a time; repeat the sequence until all bolts are loosened.

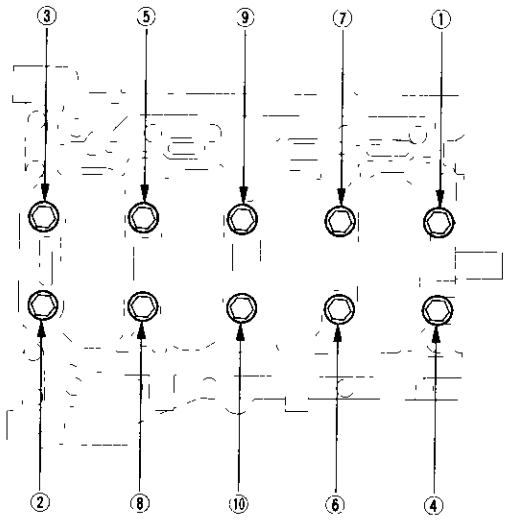


5. Remove the lower block and bearings. Keep all bearings in order.

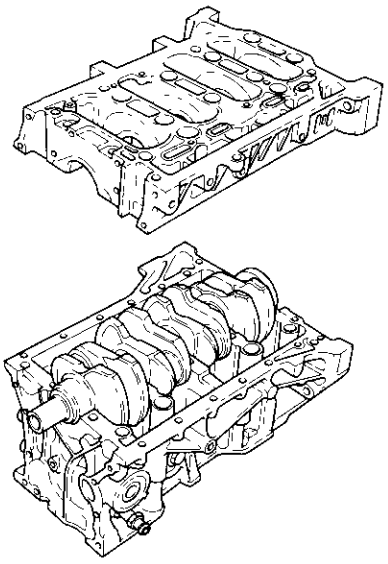

6. Remove the rod caps and bearings. Keep all caps and bearings in order.
7. Lift the crankshaft out of the engine, being careful not to damage the journals.

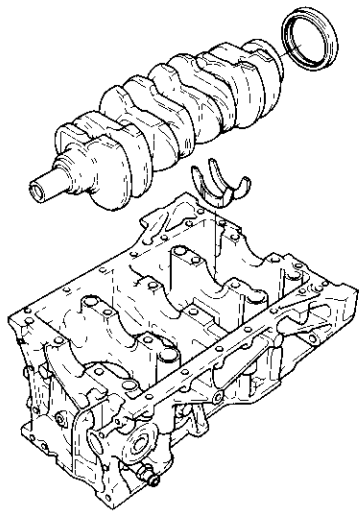

(cont'd)

## Crankshaft and Piston Removal (cont'd)

8. If you can feel a ridge of metal or hard carbon around the top of each cylinder, remove it with a ridge reamer (A). Follow the reamer manufacturer's instructions. If the ridge is not removed, it may damage the piston as it is pushed out.

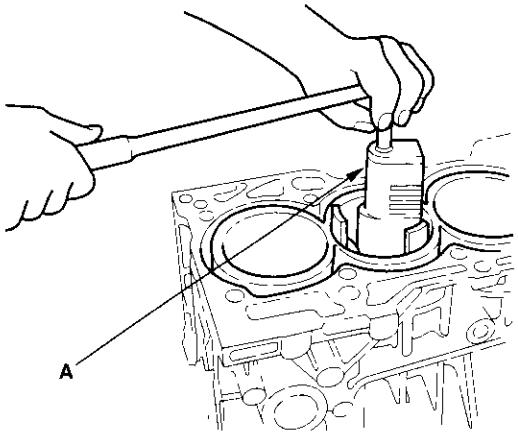


9. Use the wooden handle of a hammer (A) to drive out the pistons (B).

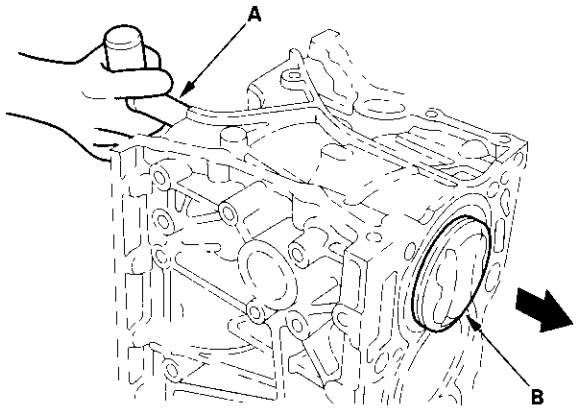


10. Reinstall the connecting rod bearings and caps after removing each piston and connecting rod assembly.

11. To avoid mixup on reassembly, mark each piston and connecting rod assembly with its cylinder number.

    NOTE: The existing number on the connecting rod does not indicate its position in the engine, it indicates the rod bore size.

## Crankshaft Inspection

### Out-of-Round and Taper

1. Remove the crankshaft from the cylinder block (see page 7-11).
2. Clean the crankshaft oil passages with pipe cleaners or a suitable brush.
3. Check the keyway and threads.
4. Measure out-of-round at the middle of each rod and main journal in two places. The difference between measurements on each journal must not be more than the service limit.

   **Journal Out-of-Round:**
   **Standard (New): 0.004 mm (0.0002 in.) max.**
   **Service Limit: 0.006 mm (0.0002 in.)**

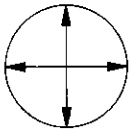

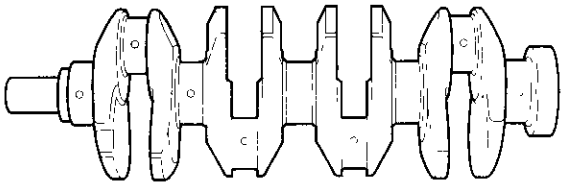

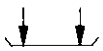



5. Measure taper at the edge of each rod and main journal. The difference between measurements on each journal must not be more than the service limit.

   **Journal Taper:**
   **Standard (New): 0.005 mm (0.0002 in.) max.**
   **Service Limit: 0.006 mm (0.0002 in.)**

### Straightness

6. Place the cylinder block on the surface plate.
7. Clean and install the bearings on the No. 1 and No. 5 journals of the cylinder block.
8. Lower the crankshaft into the block.
9. Measure runout on all main journals. Rotate the crankshaft two complete revolutions. The difference between measurements on each journal must not be more than the service limit.

   **Crankshaft Total Indicator Runout:**
   **Standard (New): 0.03 mm (0.001 in.) max.**
   **Service Limit: 0.04 mm (0.002 in.)**

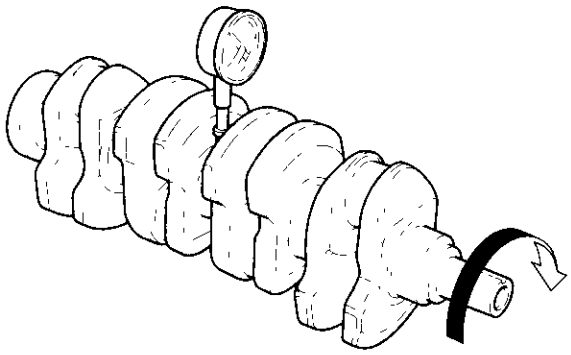

## Block and Piston Inspection

1. Remove the crankshaft and pistons (see page 7-11).
2. Check the piston for distortion or cracks.
3. Measure the piston diameter at a point 16 mm (0.6 in.) from the bottom of the skirt. There are two standard-size pistons (No Letter or A, and B). The letter is stamped on the top of the piston. Letters are also stamped on the block as cylinder bore sizes.

**Piston Diameter:**
**Standard (New):**
**No Letter (or A): 86.993–87.006 mm (3.4249–3.4254 in.)**
**B: 86.983–86.996 mm (3.4245–3.4250 in.)**

**Service Limit:**
**No Letter (or A): 86.980 mm (3.4244 in.)**
**B: 86.970 mm (3.4240 in.)**

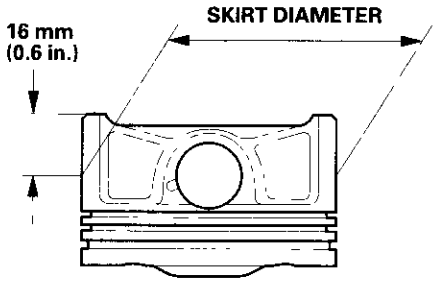


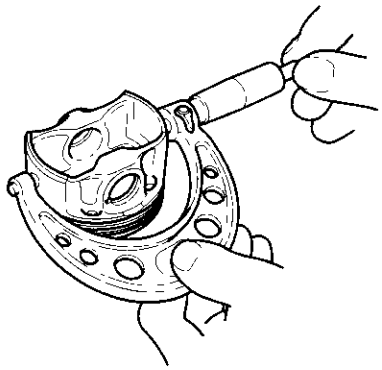

**Oversize Piston Diameter:**
**0.25: 87.233–87.246 mm (3.4344–3.4349 in.)**

4. Measure wear and taper in direction X and Y at three levels in each cylinder as shown. If measurements in any cylinder are beyond the Oversize Bore Service Limit, replace the block. If the block is to be rebored, refer to step 7 after reboring.

**Cylinder Bore Size:**
**Standard (New):**
**A or I: 87.010–87.020 mm (3.4256–3.4260 in.)**
**B or II: 87.000–87.010 mm (3.4252–3.4256 in.)**
**Service Limit: 87.070 mm (3.4279 in.)**

**Oversize:**
**0.25: 87.250–87.260 mm (3.4350–3.4354 in.)**

**Reboring limit: 0.25 mm (0.01 in.) max.**

**Bore Taper:**
**Limit: (Difference between first and third measurement) 0.05 mm (0.002 in.)**

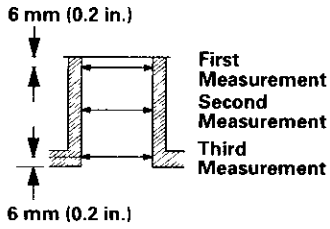


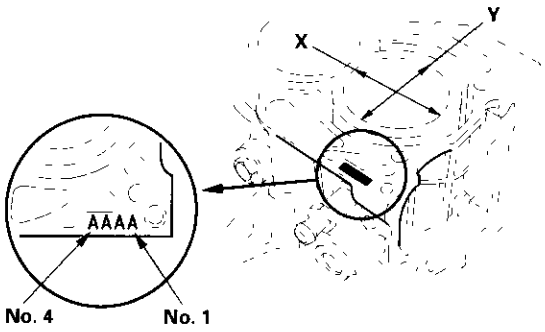


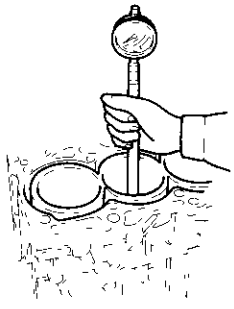

5. Scored or scratched cylinder bores must be honed.

6. Check the top of the block for warpage. Measure along the edges and across the center as shown.

**Engine Block Warpage:**
**Standard (New): 0.07 mm (0.003 in.) max.**
**Service Limit: 0.10 mm (0.004 in.)**

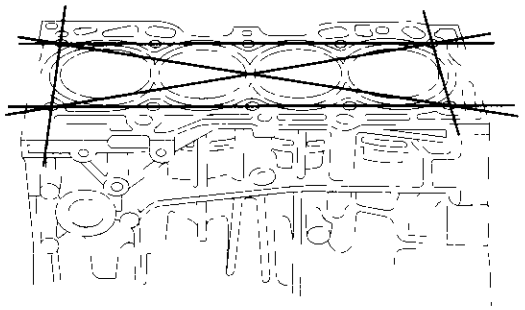

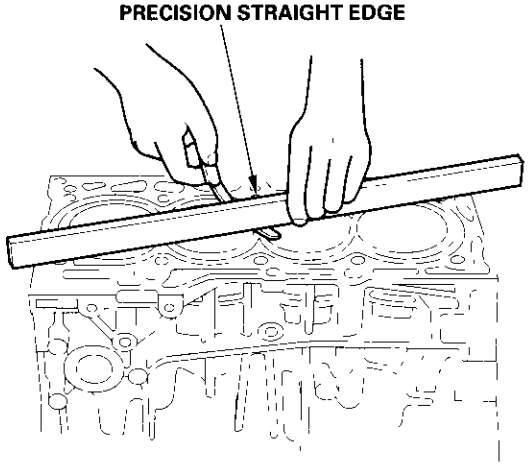


7. Calculate the difference between the cylinder bore diameter and the piston diameter. If the clearance is near or exceeds the service limit, inspect the piston and cylinder block for excessive wear.

**Piston-to-Cylinder Clearance:**
**Standard (New): 0.004 – 0.027 mm**
**(0.0002 – 0.0011 in.)**
**Service Limit: 0.04 mm (0.002 in.)**

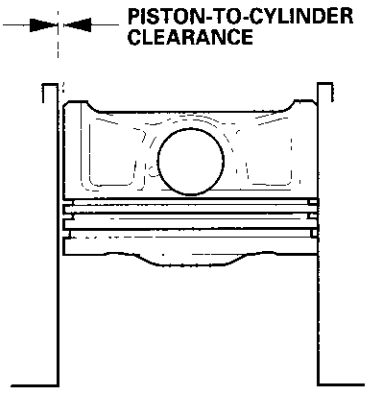

## Cylinder Honing

The cylinder liners are made with FRM (fiber reinforced metal). Hone the cylinders only as described here.

1. Measure the cylinder bores (see step 3 on page 7-14). If the engine block is to be reused, hone the cylinders and remeasure the bores. Scored or scratched cylinder bores must be honed.

2. Hone the cylinders using the following equipment, materials and methods:
   - Use only a rigid hone.
   - Honing stones: GC-600-J or finer stones for nonferrous metals
   - Pressure: 200 – 300 kPa (2 – 3 kgf/cm², 28 – 43 psi)
   - Honing rpm: 45 – 50
   - Honing thickness: Less than 0.02 mm (0.0008 in.) Do not hone more than 20 cycles.
   - Honing lubricant: Oil type
   - Honing pattern: 60 degree cross-hatch (A)
   - Hone cleaning: Clean the stones every five cycles.

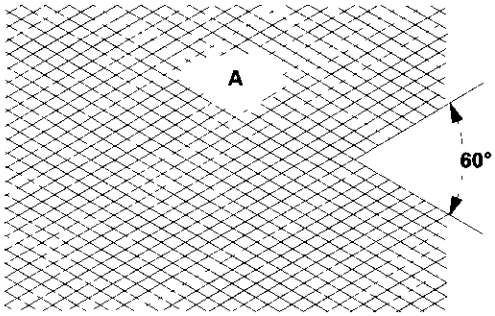


3. When honing is complete, thoroughly clean the engine block of all metal particles. Wash the cylinder bores with hot soapy water, then dry and oil them immediately to prevent rusting. Never use solvent, it will only redistribute the grit on the cylinder walls.

4. If scoring or scratches are still present in the cylinder bores after honing to the service limit, rebore the cylinders. Some light vertical scoring and scratching is acceptable if it is not deep enough to catch your fingernail and if it does not run the full length of the bore.

## Piston, Pin, and Connecting Rod Replacement

### Disassembly

1. Remove the piston from the cylinder block (see page 7-11).

2. Apply engine oil to the piston pin snap rings (A), and turn them in the ring grooves until the end gaps are lined up with the cutouts in the piston pin bores (B).

   NOTE: Take care not to damage the ring grooves.

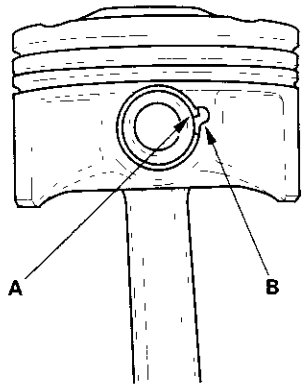


3. Remove both snap rings (A). Start at the cutout in the piston pin bore. Remove the snap rings carefully so they do not go flying or get lost. Wear eye protection.

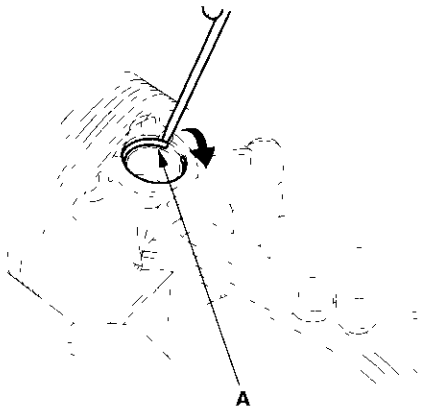


4. Heat the piston and connecting rod assembly to approximately 158°F (70°C), then remove the piston pin.

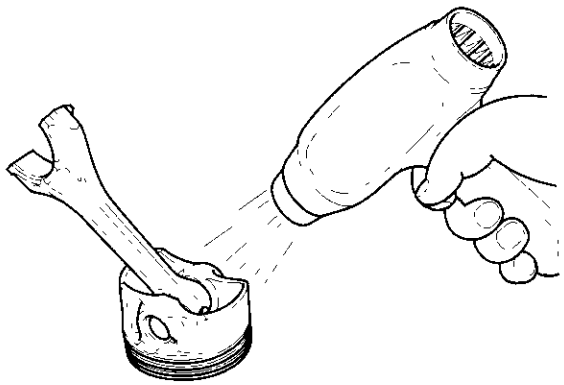

(cont'd)

## Piston, Pin, and Connecting Rod Replacement (cont'd)

### Inspection

NOTE: Inspect the piston, piston pin and connecting rod when they are at room temperature.

1. Measure the diameter of the piston pin.

**Piston Pin Diameter:**
**Standard (New): 22.961 – 22.965 mm (0.9040 – 0.9041 in.)**
**Service Limit: 22.953 mm (0.9037 in.)**

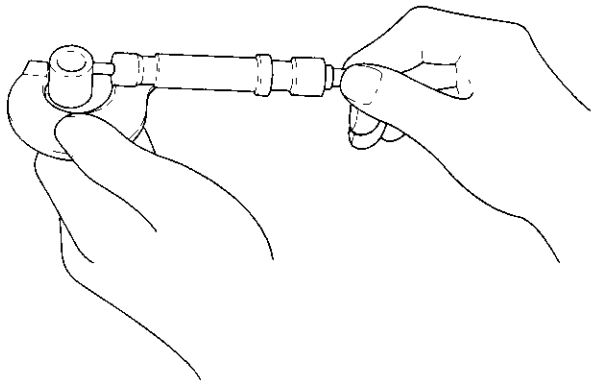

2. Zero the dial indicator to the piston pin diameter.

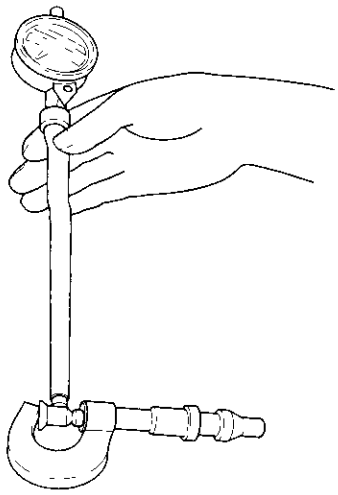

3. Check the difference between the piston pin diameter and piston pin hole diameter in the piston.

**Piston Pin-to-Piston Clearance:**
**Standard (New): – 0.0030 to + 0.0060 mm (– 0.00012 to + 0.00024 in.)**
**Service Limit: 0.010 mm (0.0004 in.)**

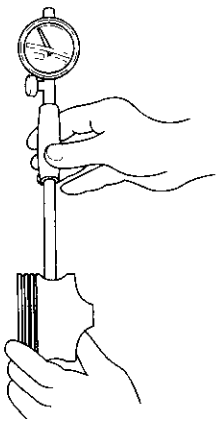

4. Measure the piston pin-to-connecting rod clearance.

NOTE: When replacing the connecting rod, also replace the piston pin as a set.

**Piston Pin-to-Connecting Rod Clearance:**
**Standard (New): 0.018 – 0.035 mm (0.0007 – 0.0014 in.)**
**Service Limit: 0.04 mm (0.0016 in.)**

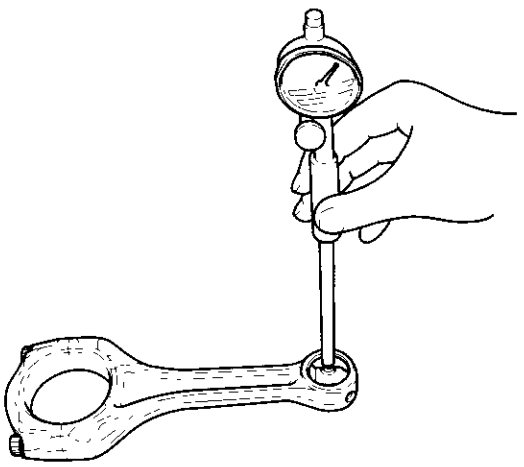

## Reassembly

1. Install a new piston pin snap ring (A).




2. Coat the piston pin bore in the piston and the connecting rod, and the piston pin with engine oil.

3. Heat the piston to about 158°F (70°C).

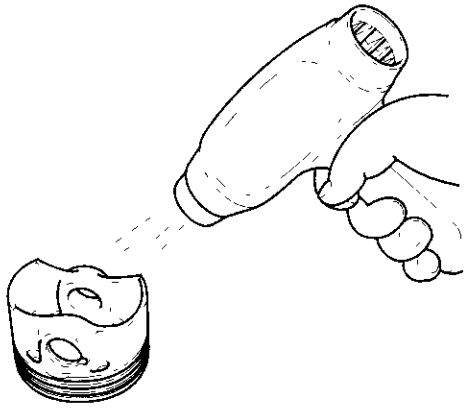

4. Install the piston pin (A). Assemble the piston (B) and connecting rod (C) with the "IN" mark (D) and the reference mark (E) on the same side.

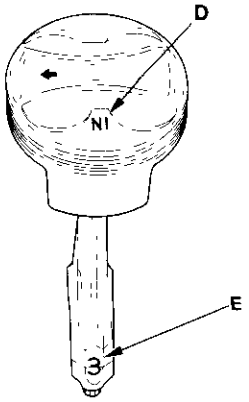


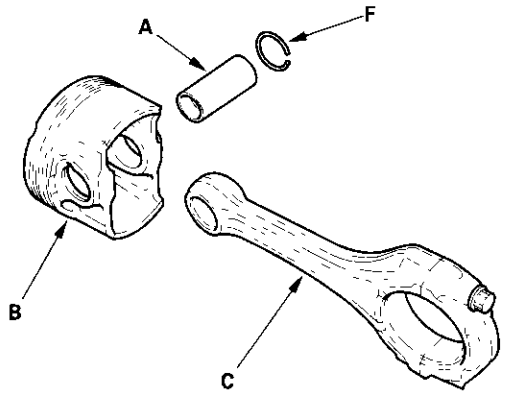


5. Install the remaining new snap ring (F).

6. Turn the snap rings in the ring grooves until the end gaps are positioned at the bottom of the piston.

## Piston Ring Replacement

1. Remove the piston from the cylinder block (see page 7-11).

2. Using a ring expander (A), remove the old piston rings (B).

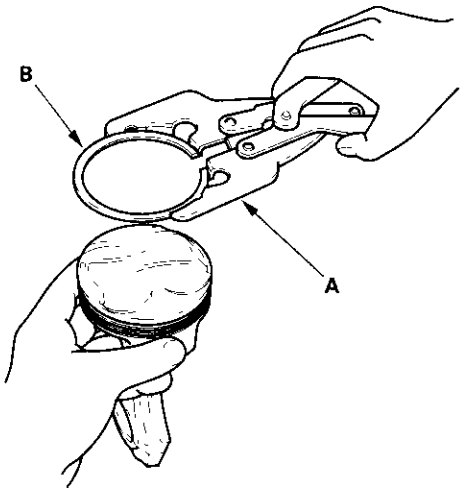


3. Clean all ring grooves thoroughly with a squared-off broken ring or ring groove cleaner with a blade to fit the piston grooves.
The top and second ring grooves are 1.2 mm (0.05 in.) wide. The oil ring groove is 2.0 mm (0.08 in.) wide. File down a blade if necessary. Do not use a wire brush to clean the ring grooves, or cut the ring grooves deeper with the cleaning tools.

   NOTE: If the piston is to be separated from the connecting rod, do not install new rings yet.

4. Using a piston, push a new ring (A) into the cylinder bore 15—20 mm (0.6—0.8 in.) from the bottom.

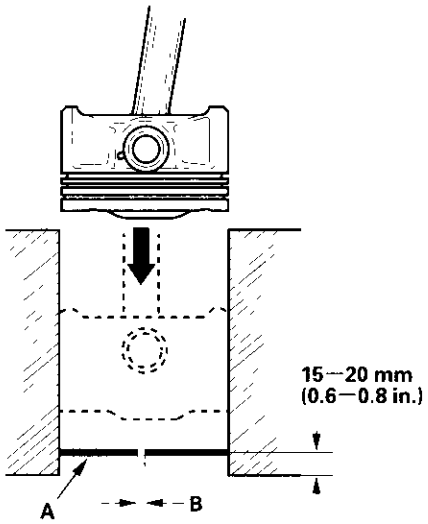


5. Measure the piston ring end-gap (B) with a feeler gauge:

   - If the gap is too small, check to see if you have the proper rings for your engine.
   - If the gap is too large, recheck the cylinder bore diameter against the wear limits (see page 7-14). If the bore is over the service limit, the cylinder block must be rebored.

**Piston Ring End-Gap:**
**Top Ring**
**Standard (New): 0.25 – 0.35 mm (0.010—0.014 in.)**
**Service Limit: 0.60 mm (0.024 in.)**

**Second Ring**
**Standard (New): 0.60—0.75 mm (0.024 – 0.030 in.)**
**Service Limit: 0.90 mm (0.035 in.)**

**Oil Ring**
**Standard (New): 0.20 – 0.70 mm (0.008 · 0.028 in.)**
**Service Limit: 0.80 mm (0.031 in.)**

6. Install the rings as shown. The top ring (A) has a R1 mark and the second ring (B) has a R2 mark. The manufacturing marks (C) must be facing upward.

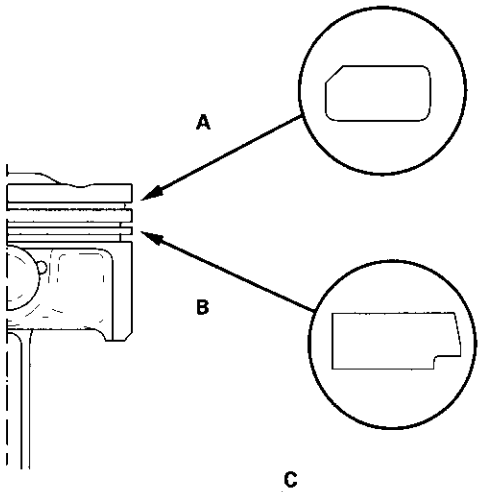


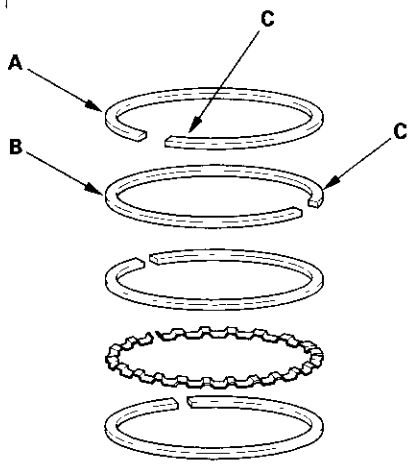


**Piston Ring Dimensions:**

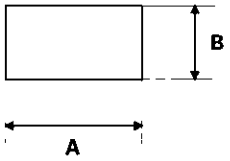


**Top Ring (Standard):**
**A: 2.8 mm (0.11 in.)**
**B: 1.2 mm (0.05 in.)**

**Second Ring (Standard):**
**A: 3.2 mm (0.13 in.)**
**B: 1.2 mm (0.05 in.)**

7. Rotate the rings in their grooves to make sure they do not bind.

8. Position the ring end gaps as shown:

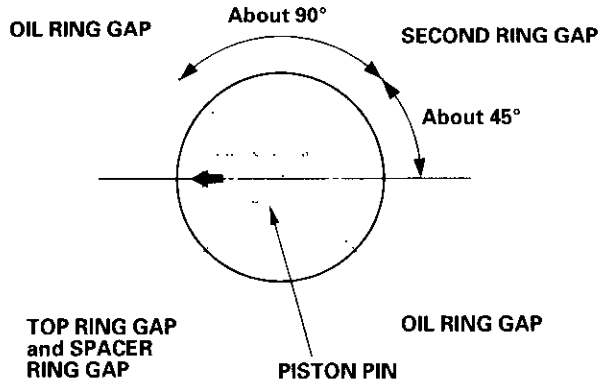


9. After installing a new set of rings, measure the ring-to-groove clearances:

**Top Ring Clearance**
**Standard (New): 0.045 – 0.090 mm (0.0018 – 0.0035 in.)**
**Service Limit: 0.135 mm (0.005 in.)**

**Second Ring Clearance**
**Standard (New): 0.040 – 0.070 mm (0.0016 – 0.0028 in.)**
**Service Limit: 0.13 mm (0.005 in.)**

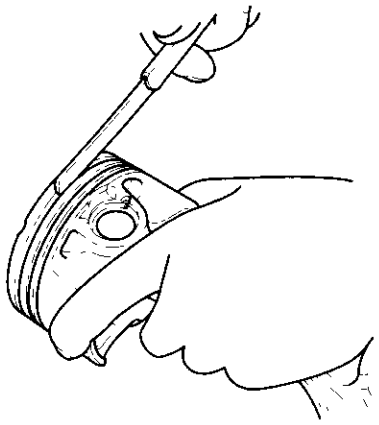

## Piston Installation

### If the crankshaft is already installed

1. Set the crankshaft to bottom dead center (BDC) for each cylinder.
2. Remove the connecting rod caps, then install the ring compressor, and check that the bearing is securely in place.
3. Position the arrow (A) facing the timing chain side of the engine.

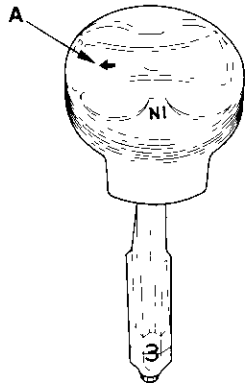


4. Position the piston in the cylinder, and tap it in using the wooden handle of a hammer (A). Maintain downward force on the ring compressor (B) to prevent the rings from expanding before entering the cylinder bore.

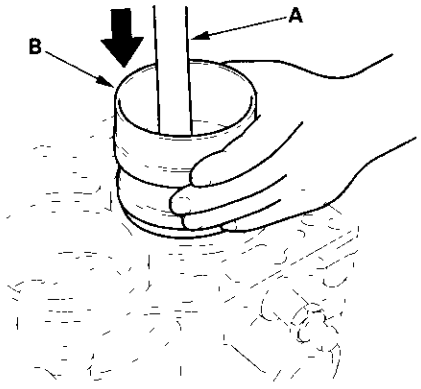


5. Stop after the ring compressor pops free, and check the connecting rod-to-crank journal alignment before pushing the piston into place.
6. Check the connecting rod bearing clearance with plastigage (see page 7-9).
7. Apply engine oil to the threads of the connecting rod bolts.
8. Install the rod caps with bearings, then tighten the connecting rod bolts is sequence to 25 N·m (2.5 kgf·m, 18 lbf·ft).
9. Tighten the connecting rod bolts an additional 90°.

### If the crankshaft is not installed

1. Remove the connecting rod caps, then install the ring compressor, and check that the bearing is securely in place.

2. Position the arrow (A) facing the timing chain side of the engine.

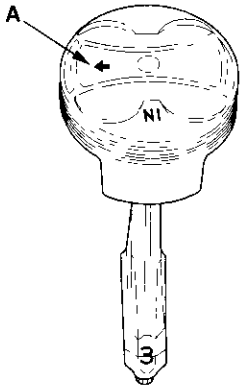


3. Position the piston in the cylinder, and tap it in using the wooden handle of a hammer (A). Maintain downward force on the ring compressor (B) to prevent the rings from expanding before entering the cylinder bore.

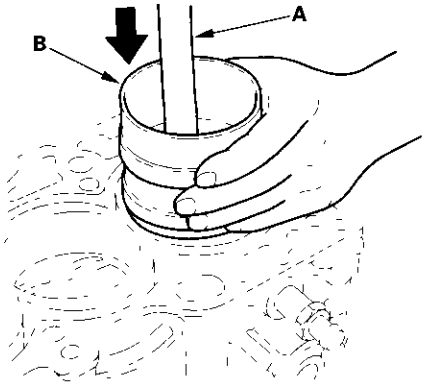


4. Position all pistons at top dead center.

## Crankshaft Installation

**Special Tools Required**
- Driver 07749-0010000
- Driver attachment 07948-SB00101

1. Check the connecting rod bearing clearance with plastigage (see page 7-9).
2. Check the main bearing clearance with plastigage (see page 7-6).
3. Apply engine oil to the main bearings and rod bearings.
4. Install the bearing halves in the cylinder block and connecting rods.
5. Hold the crankshaft so rod journal No. 2 and rod journal No. 3 are straight up, and lower the crankshaft into the block.
6. Install the thrust washers (A) on both edges of the No. 4 main bearing recess.

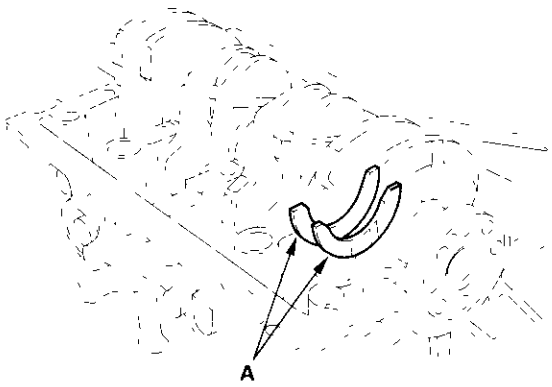


7. Apply engine oil to the threads of the connecting rod bolts.
8. Seat the rod journals into connecting rod No. 1 and connecting rod No. 4. Install the connecting rod caps and bolts finger-tight. Install the caps so the bearing recess is on the same side as the recess in the rod.
9. Rotate the crankshaft clockwise, and seat the journals into connecting rod No. 2 and connecting rod No. 3. Install the connecting rod caps and bolts finger-tight.
10. Tighten the connecting rod bolts in sequence to 25 N·m (2.5 kgf·m, 18 lbf·ft).
11. Tighten the connecting rod bolts an additional 90°.
12. Apply liquid gasket, part No. 08718-0009, evenly to the cylinder block mating surface of the lower block and to the inner threads of the bolt holes.

    NOTE: Do not install the parts if 5 minutes or more have elapsed since applying liquid gasket. Instead, reapply liquid gasket after removing old residue.

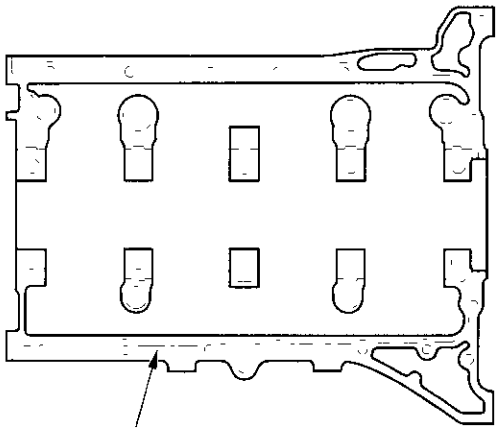

13. Put the lower block on the cylinder block.

14. Tighten the bearing cap bolts is sequence to 29 N·m (3.0 kgf·m, 22 lbf·ft).

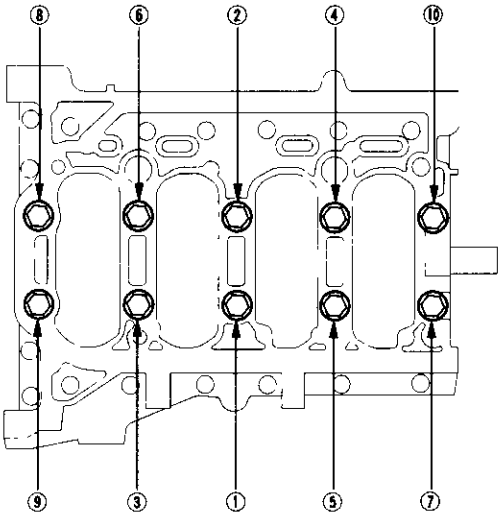


15. Tighten the bearing cap bolts an additional 60°.

16. Tighten the 8 mm bolts in sequence to 22 N·m (2.2 kgf·m, 16 lbf·ft).

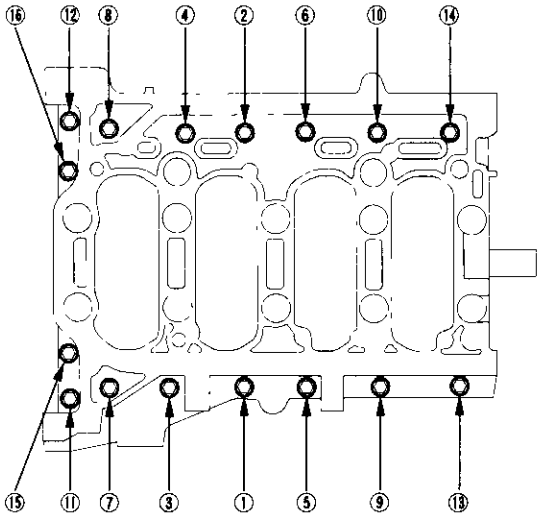


17. Use the special tools to drive a new oil seal squarely into the block to the specified installed height.

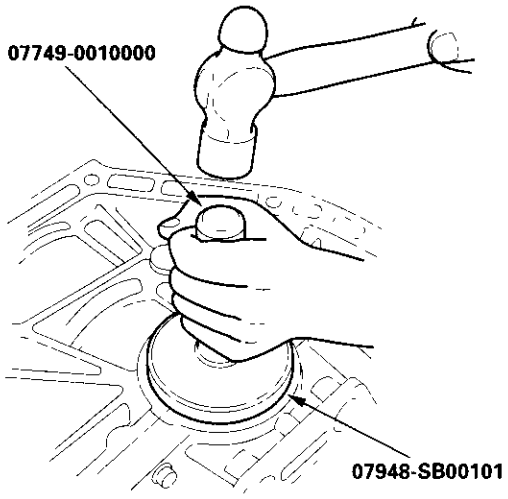


18. Measure the distance between the crankshaft (A) and oil seal (B).

**Oil Seal Installed Height:**
**5.5 – 6.5 mm (0.22 – 0.26 in.)**

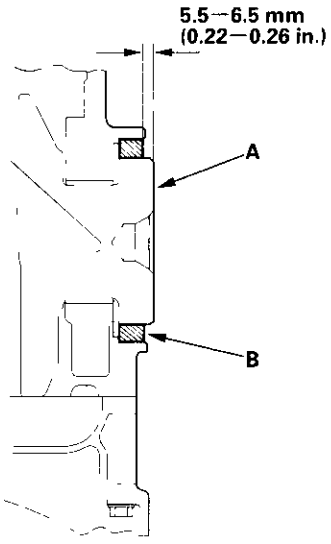


19. Install the oil pump (see step 11 on page 8-11).

20. Install the cam chain (see page 6-19).

## Pulley End Crankshaft Seal Installation - In Car

**Special Tools Required**
- Seal driver 07LAD-PT3010A

1. Dry the crankshaft oil seal housing.
2. Using the seal driver, drive in the crankshaft oil seal until the driver bottoms against the chain case.

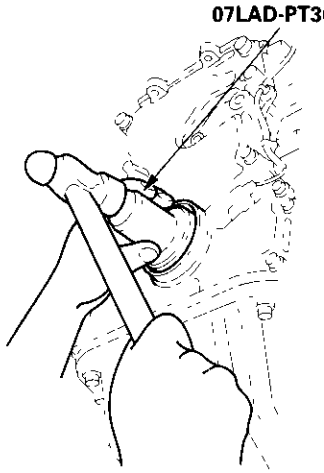


## Transmission End Crankshaft Seal Installation - In Car

**Special Tools Required**
- Driver 07749-0010000
- Driver attachment 07948-SB00101

1. Dry the crankshaft oil seal housing.
2. Use the special tools to drive a new oil seal squarely into the block to the specified installed height.

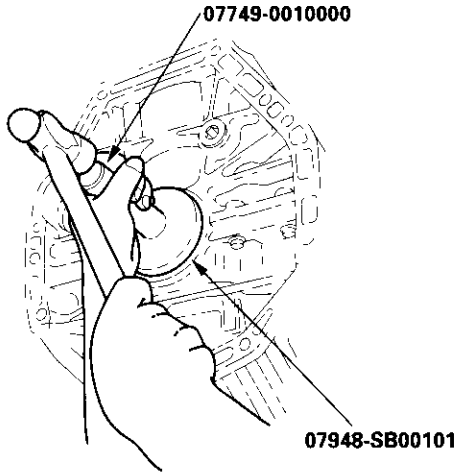


3. Measure the distance between the crankshaft (A) and oil seal (B).

**Oil Seal Installed Height:**
**5.5 – 6.5 mm (0.22 – 0.26 in.)**

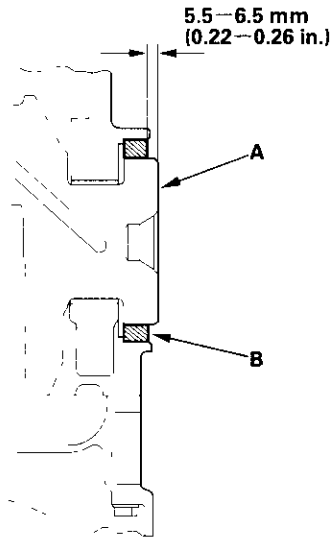

# Engine Mechanical



## Engine Lubrication


Special Tools ..... 8-2
Component Location Index ..... 8-3
Oil Pressure Switch Test ..... 8-4
Oil Pressure Test ..... 8-4
Engine Oil Replacement ..... 8-5
Engine Oil Filter Replacement ..... 8-6
Oil Jet Inspection ..... 8-7
Oil Pump Overhaul ..... 8-8

## Special Tools

| Number | Tool Number | Description | Qty |
|---|---|---|---|
| ① | 07912-6110001 | Oil Filter Wrench | 1 |

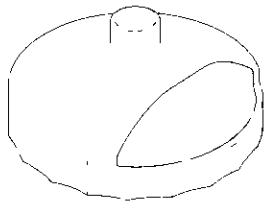

①

## Component Location Index

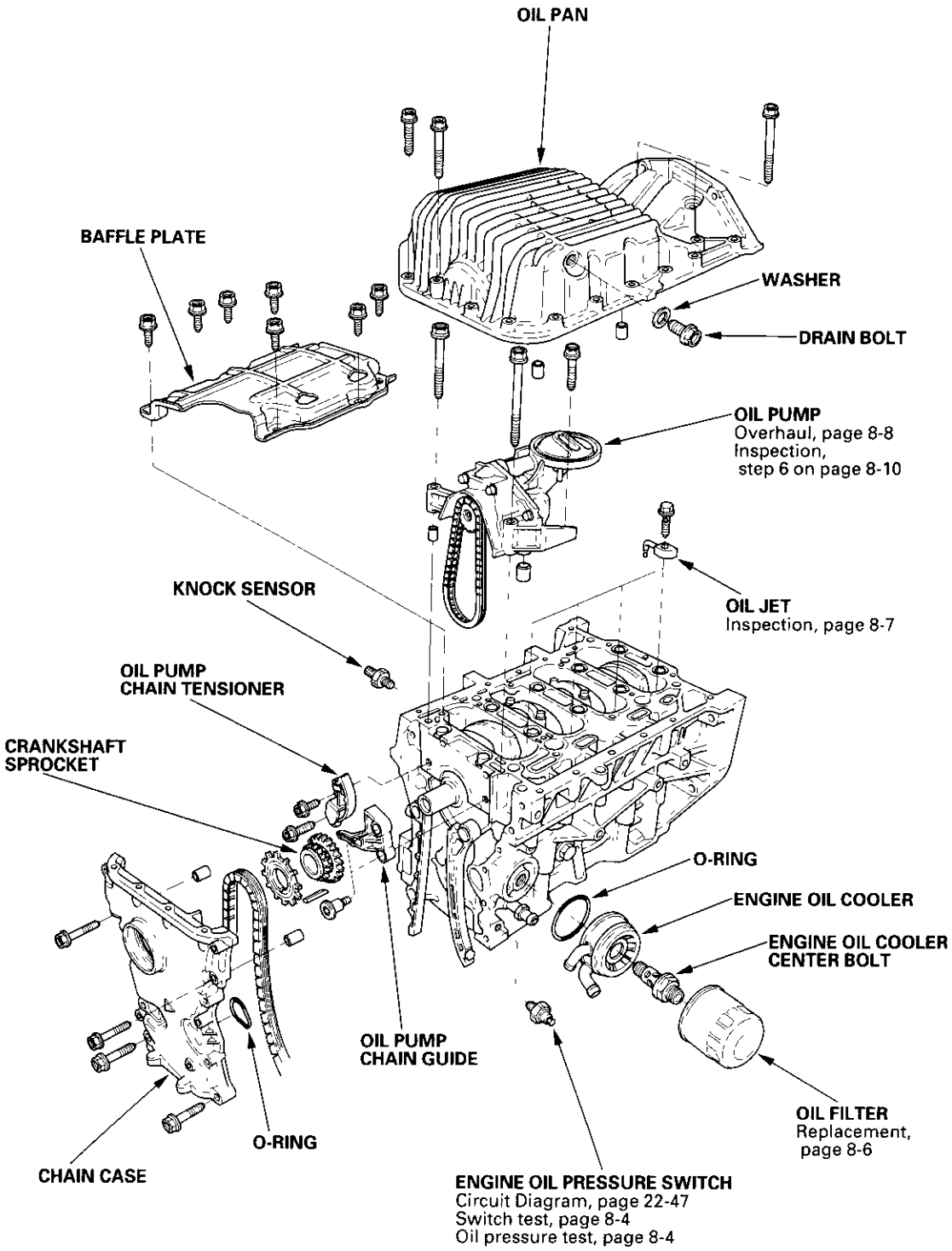

## Oil Pressure Switch Test

1. Remove the YEL/RED wire (A) from the engine oil pressure switch (B).

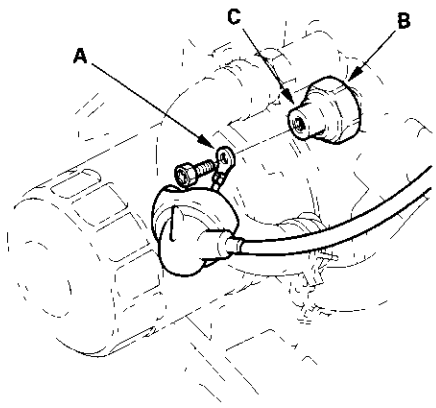


2. Check for continuity between the positive terminal (C) and the engine (ground). There should be continuity with the engine stopped. There should be no continuity with the engine running.

3. If the switch fails to operate, check the engine oil level. If the engine oil level is OK, check the engine oil pressure.

## Oil Pressure Test

If the oil pressure indicator light stays on with the engine running, check the engine oil level. If the oil level is correct:

1. Connect a tachometer or a Honda PGM Tester.

2. Remove the engine oil pressure switch, and install an oil pressure gauge (A).

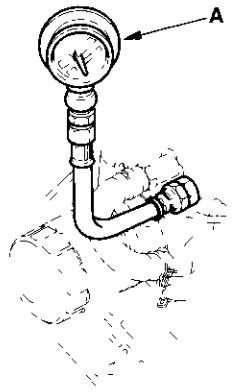


3. Start the engine. Shut it off immediately if the gauge registers no oil pressure. Repair the problem before continuing.

4. Allow the engine to reach operating temperature (fan comes on at least twice). The pressure should be:

**Engine Oil Temperature: 176°F (80°C)**
**Engine Oil Pressure:**
**At Idle: 250 kPa (2.5 kgf/cm², 36 psi) minimum**
**At 3,000 rpm: 590 kPa (6.0 kgf/cm², 85 psi) minimum**

5. If oil pressure is NOT within specifications, inspect these item:
   - Check the oil filter for clogging.
   - Check the oil pump (see page 8-8).

## Engine Oil Replacement

NOTE: Under normal conditions, the oil filter should be replaced at every other oil change. Under severe conditions, the oil filter should be replaced at each oil change.

**Change interval**
**Every 7,500 miles (12,000 km) or 12 months (Normal conditions)**
**Every 3,750 miles (6,000 km) or 6 months (Severe conditions).**

1. Warm up the engine.
2. Remove the drain bolt (A), and drain the engine oil.

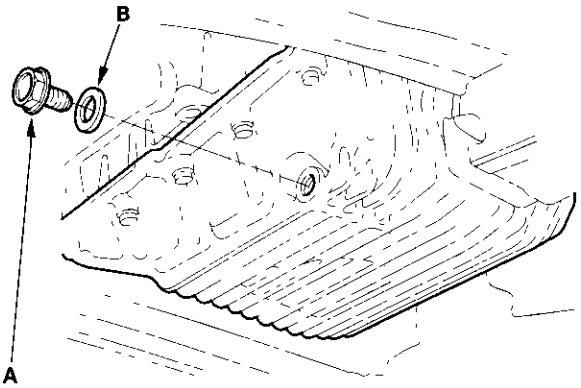


**39 N·m (4.0 kgf·m, 29 lbf·ft)**
Do not overtighten.

3. Reinstall the drain bolt with a new washer (B).
4. Refill with the recommended oil (see page 3-2).

**Capacity**
**4.5 ℓ (4.8 US qt) at oil change.**
**4.8 ℓ (5.1 US qt) at oil change including filter.**
**5.6 ℓ (5.9 US qt) after engine overhaul.**

5. Run the engine for more than 3 minutes, then check for oil leakage.

## Engine Oil Filter Replacement

**Special Tools Required**
Oil Filter Wrench 07912-6110001

1. Remove the oil filter with the special oil filter wrench.

2. Inspect the threads (A) and rubber seal (B) on the new filter. Wipe off the seat on the engine block, then apply a light coat of oil to the filter rubber seal. Use only filters with a built-in bypass system.

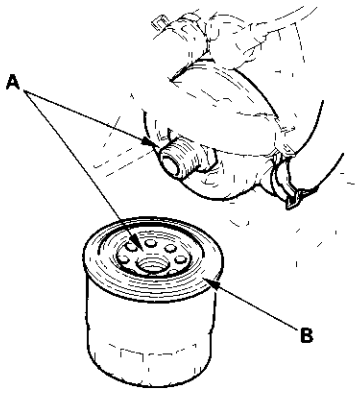


3. Install the oil filter by hand.

4. After the rubber seal seats, tighten the oil filter clockwise with the special tool.

**Tighten:** **7/8 turn clockwise.**
**Tightening torque:** **22 N·m (2.2 kgf·m, 16 lbf·ft)**

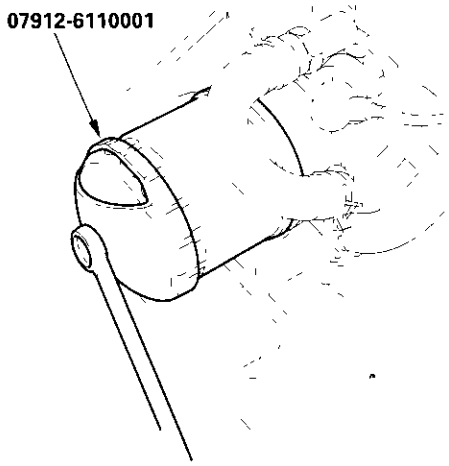


5. If eight numbers (1 to 8) are printed around the outside of the filter, use the following procedure to tighten the filter.
   - Spin the filter on until its seal lightly seats against the engine oil cooler, and note which number is at the bottom.
   - Tighten the filter by turing it clockwise seven numbers from the one you noted. For example, if number 2 is at the bottom when the seal is seated, tighten the filter until the number 1 comes around the bottom.

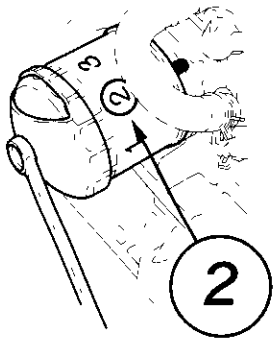


**Number when rubber seal is seated.**

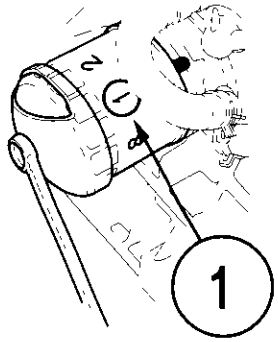


**Number after tightening.**

| Number when rubber seal is seated | 1 | 2 | 3 | 4 | 5 | 6 | 7 | 8 |
|---|---|---|---|---|---|---|---|---|
| Number after tightening | 8 | 1 | 2 | 3 | 4 | 5 | 6 | 7 |

6. After installation, fill the engine with oil up to the specified level, run the engine for more than 3 minutes, then check for oil leakage.

## Oil Jet Inspection

1. Remove the oil jet, and inspect it as follows.

   - Make sure that a 1.5 mm (0.06 in.) diameter drill will go through the nozzle hole (A) (1.6 mm (0.06 in.) diameter).
   - Insert the end of a 1.1 mm (0.04 in.) drill into the oil intake (1.2 mm (0.05 in.) diameter). Make sure the check ball (B) moves smoothly and has a stroke of approximately 4.0 mm (0.16 in.).
   - Check the oil jet operation with an air nozzle. It should take at least 200 kPa (2.0 kgf/cm², 28 psi) to unseat the check ball.

   NOTE: Replace the oil jet assembly if the nozzle is damaged or bent.

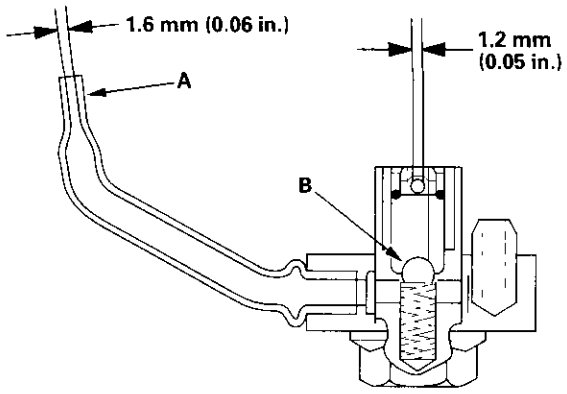


2. Mounting torque is critical. Be very precise when installing.

   **Torque: 16 N·m (1.6 kgf·m, 12 lbf·ft)**

## Oil Pump Overhaul

### Exploded View

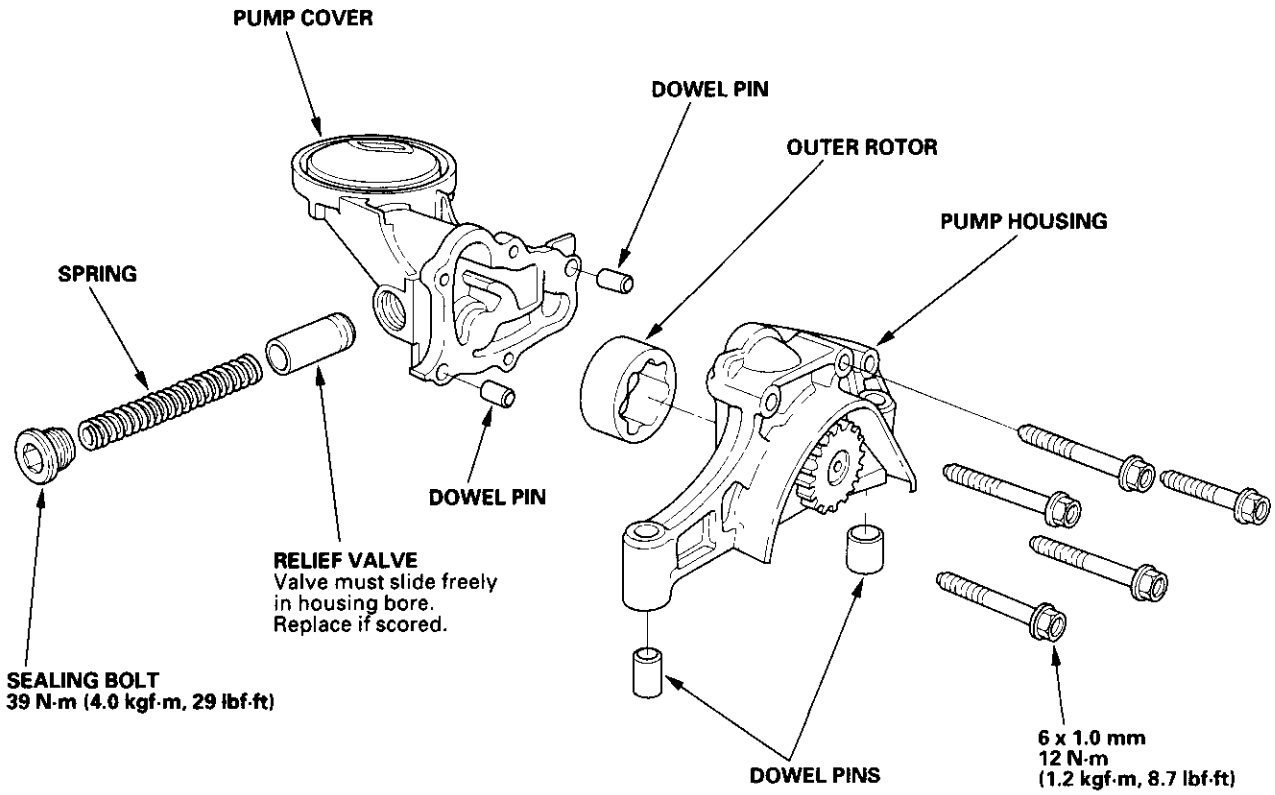

**Removal**

1. Remove the cam chain (see page 6-15).
2. Remove the oil pump chain tensioner.

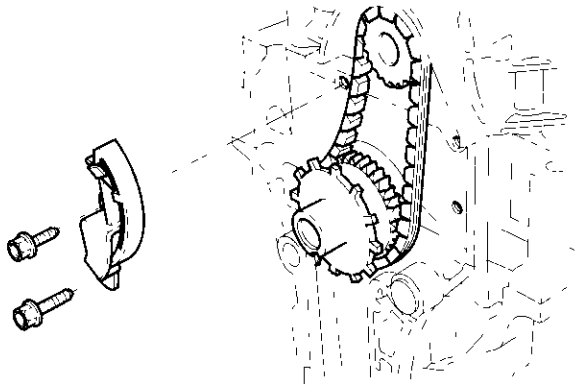

3. Remove the baffle plate.

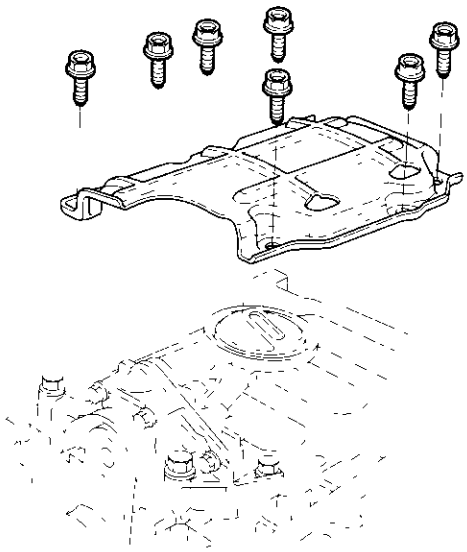

4. Remove the three bolts securing the oil pump.

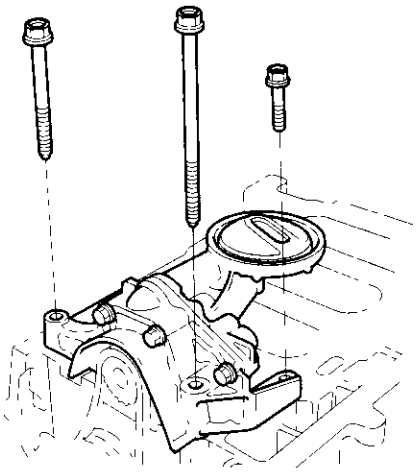

5. Remove the oil pump (A), oil pump chain (B) and crankshaft sprocket (C).

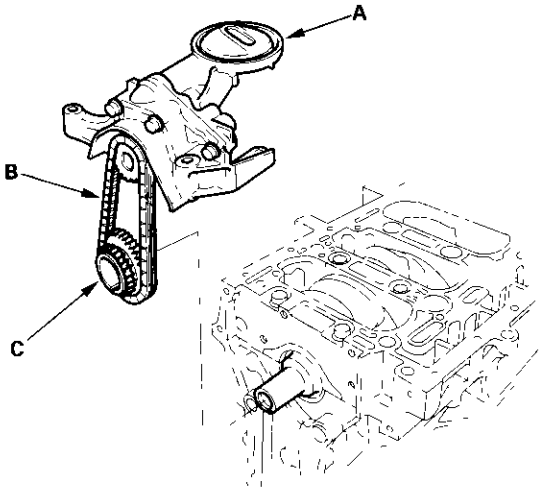


(cont'd)

## Oil Pump Overhaul (cont'd)

**Inspection**

6. Remove the pump cover.

7. Check the inner-to-outer rotor radial clearance between the inner rotor (A) and outer rotor (B). If the inner-to-outer rotor radial clearance exceeds the service limit, replace the outer rotor and oil pump housing.

**Inner Rotor-to-Outer Rotor Radial Clearance**
**Standard (New): 0.02–0.15 mm (0.001–0.006 in.)**
**Service Limit: 0.20 mm (0.008 in.)**

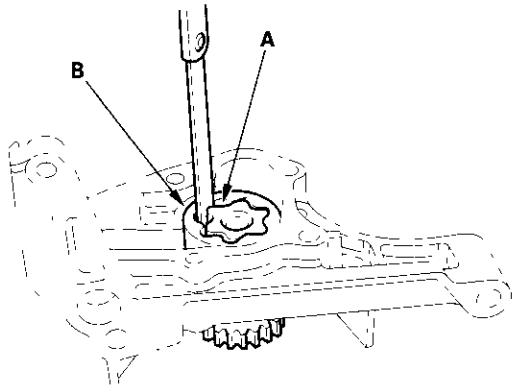


8. Check the housing-to-rotor axial clearance between the rotor (A) and pump housing (B). If the housing-to-rotor axial clearance exceeds the service limit, replace the outer rotor and oil pump housing.

**Housing-to-Rotor Axial Clearance**
**Standard (New): 0.02–0.07 mm (0.001–0.003 in.)**
**Service Limit: 0.12 mm (0.005 in.)**

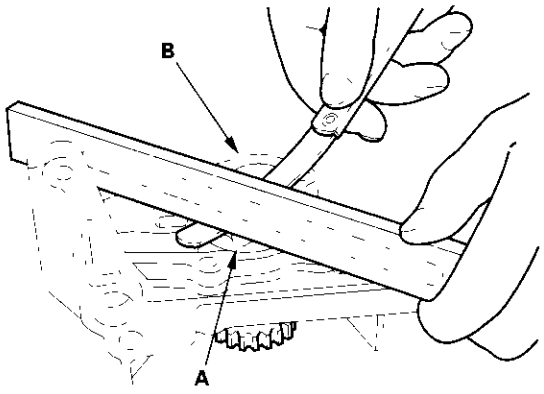


9. Check the housing-to-outer rotor radial clearance between the outer rotor (A) and pump housing (B). If the housing-to-outer rotor radial clearance exceeds the service limit, replace the outer rotor and oil pump housing.

**Housing-to-Outer Rotor Radial Clearance**
**Standard (New): 0.15–0.21 mm (0.006–0.008 in.)**
**Service Limit: 0.23 mm (0.009 in.)**

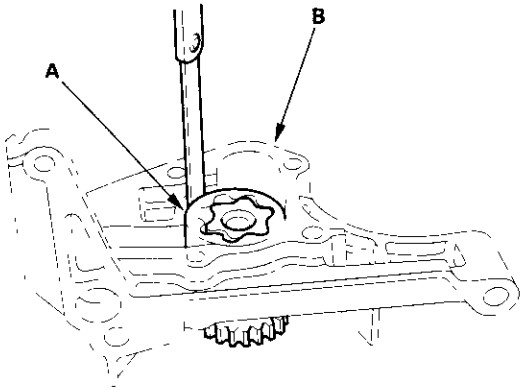


10. Inspect both rotors and the pump housing for scoring or other damage. Replace parts if necessary.

**Installation**

11. Squeeze the new oil pump chain tensioner (A), then install the set clip (B) on it as shown.

    NOTE: The set clip is supplied with the oil pump chain tensioner.

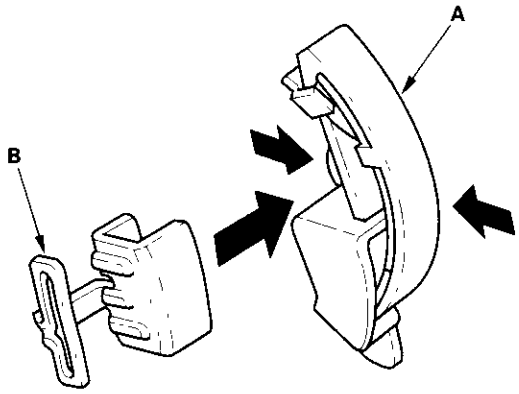


12. Install the crankshaft sprocket (A), oil pump chain (B) and oil pump (C).

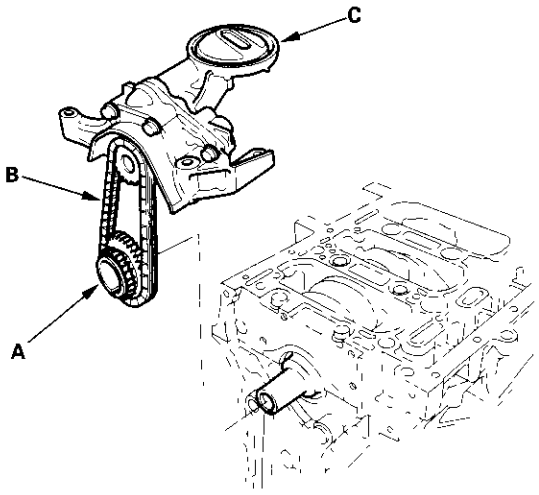


13. Tighten the bolts on the oil pump.

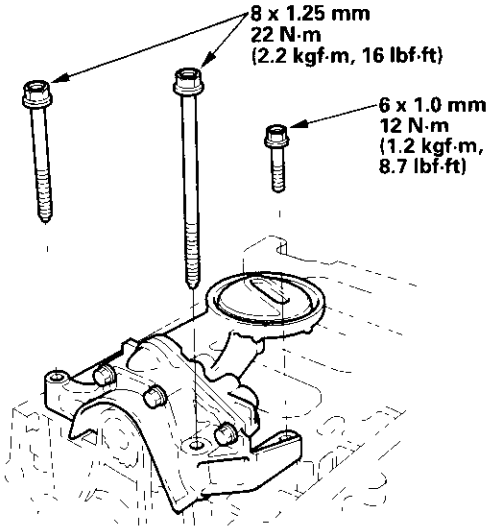


14. Install the baffle plate.

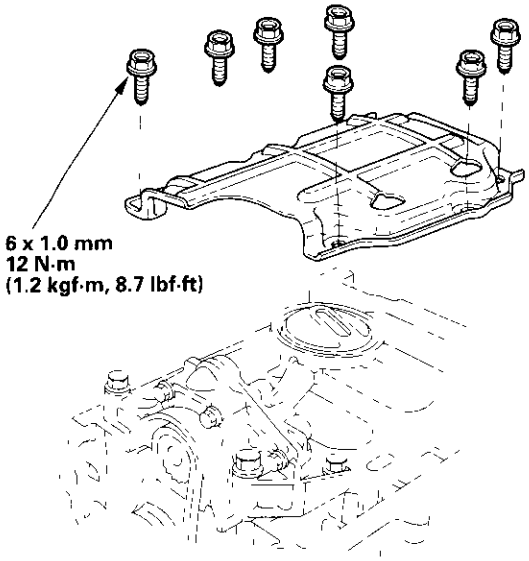


(cont'd)

## Oil Pump Overhaul (cont'd)

15. Set the crankshaft sprocket so that the No. 1 piston is at top dead center (TDC). Align the key (A) on the sprocket and crankshaft with the pointer (B) on the cylinder block.

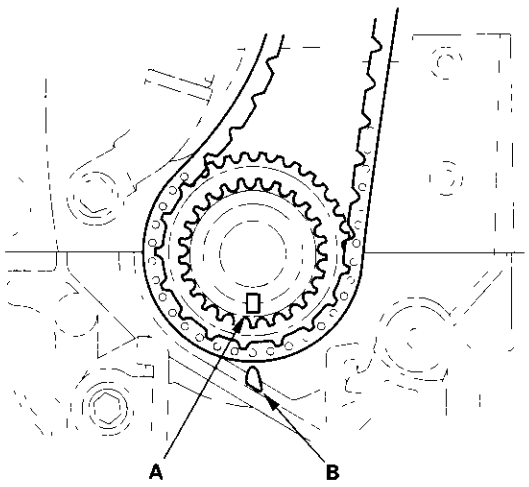


16. Move the cam chain so that the colored piece (A) aligns with the punched mark (B) on the crankshaft sprocket.

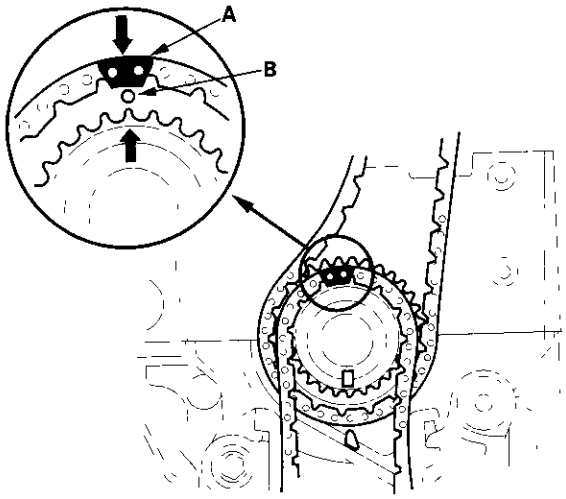


17. Install the oil pump chain guide (A) and oil pump chain tensioner (B).

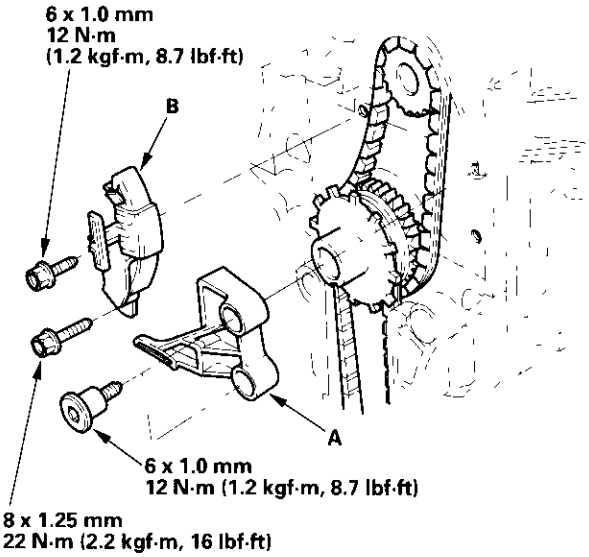


18. Remove the set clip from the oil pump chain tensioner.

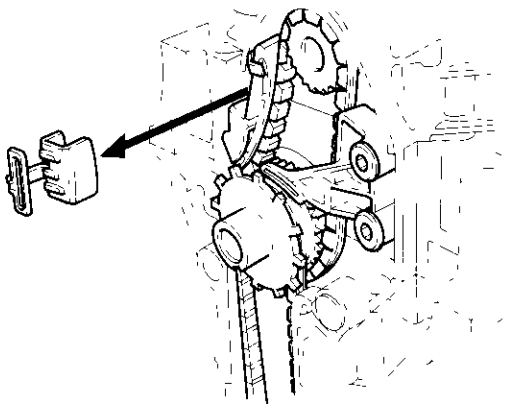

19. Install the cam chain (see page 6-19).

# Engine Mechanical



## Intake Manifold and Exhaust System


Intake Manifold Removal/Installation ..... 9-2
Exhaust Manifold Removal/Installation ..... 9-3
Exhaust Pipe and Muffler Replacement ..... 9-4

# Intake Manifold and Exhaust System

## Intake Manifold Removal/Installation

NOTE: Use new O-rings and gaskets when reassembling.

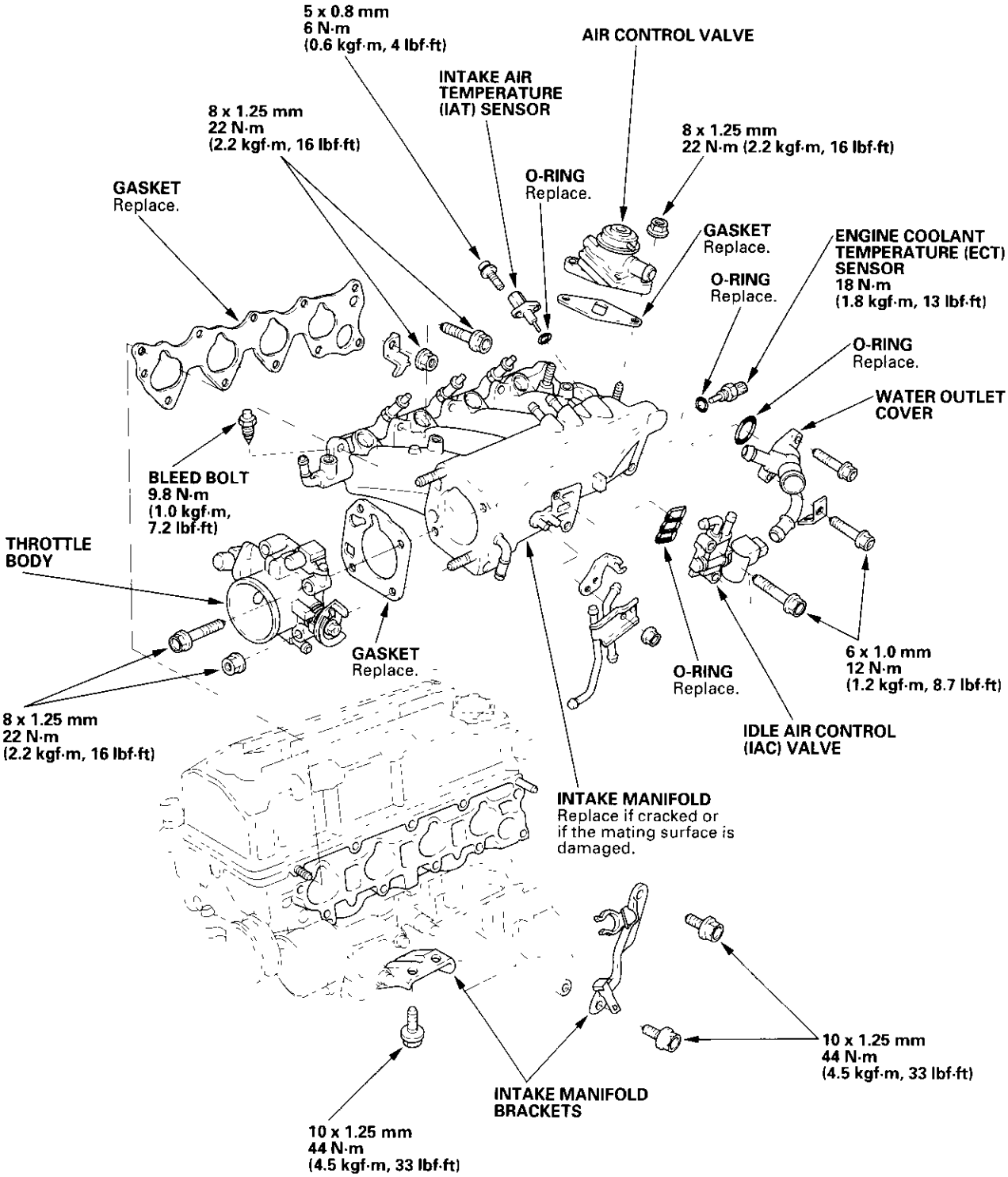

## Exhaust Manifold Removal/Installation

NOTE: Use new gaskets and self-locking nuts when reassembling.

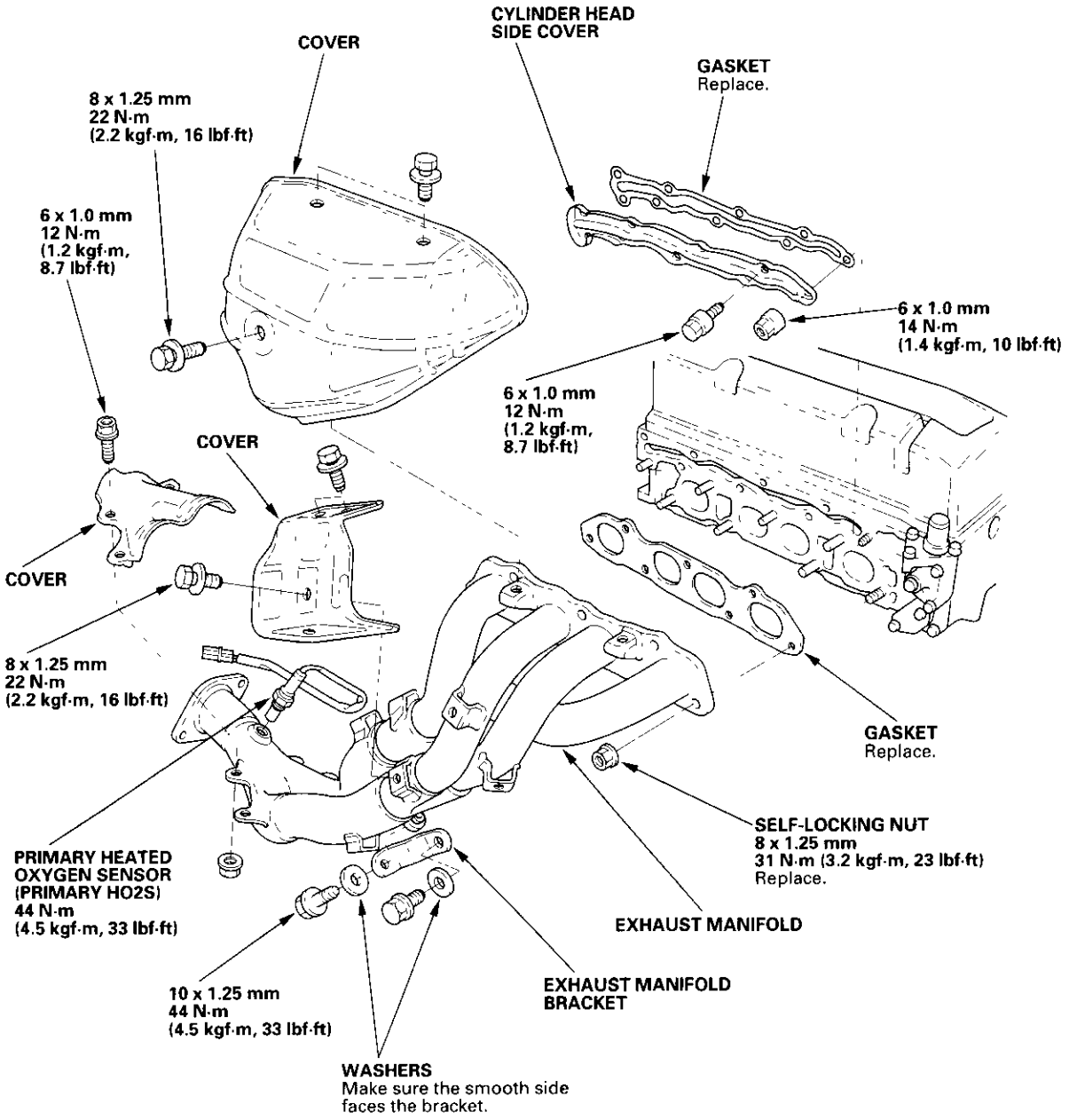

## Exhaust Pipe and Muffler Replacement

NOTE: Use new gaskets and self-locking nuts when reassembling.

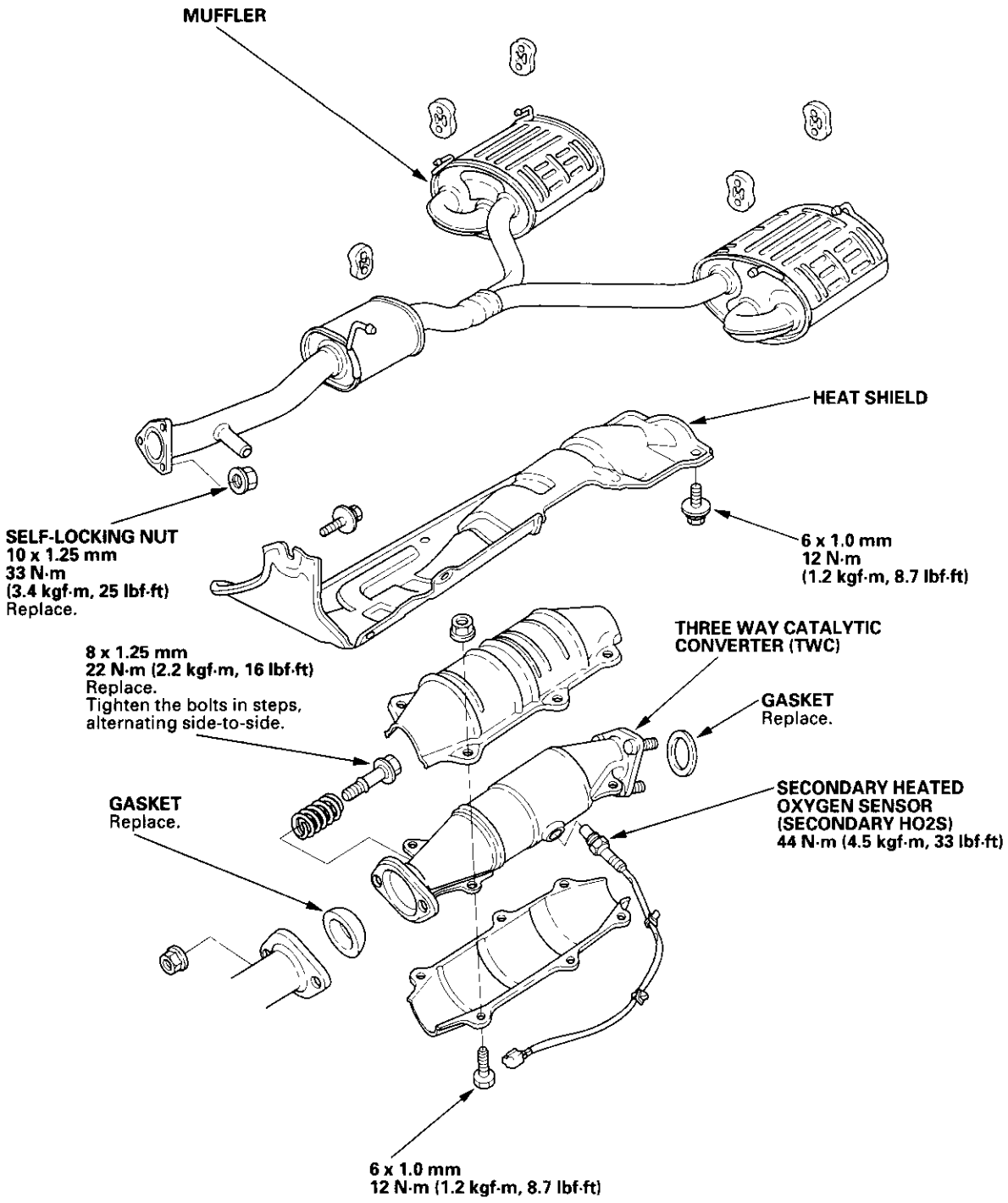

# Engine Cooling

## Cooling System


Component Location Index ..... 10-2
Radiator Cap Test ..... 10-5
Radiator Test ..... 10-5
Fan Motor Test ..... 10-6
Thermostat Test ..... 10-6
Water Pump Inspection ..... 10-7
Water Pump Replacement ..... 10-7
Coolant Replacement ..... 10-8
Thermostat Replacement ..... 10-10
*Radiator and Fan Replacement* ..... 10-11


## Fan Controls


Component Location Index ..... 10-12
Symptom Troubleshooting Index ..... 10-13
Circuit Diagram ..... 10-14
Radiator Fan Circuit Troubleshooting ..... 10-15
Radiator Fan Switch Circuit Troubleshooting (Open) ..... 10-17
Radiator Fan Switch Circuit Troubleshooting (Short) ..... 10-17
Radiator Fan Switch Test ..... 10-18

## Component Location Index

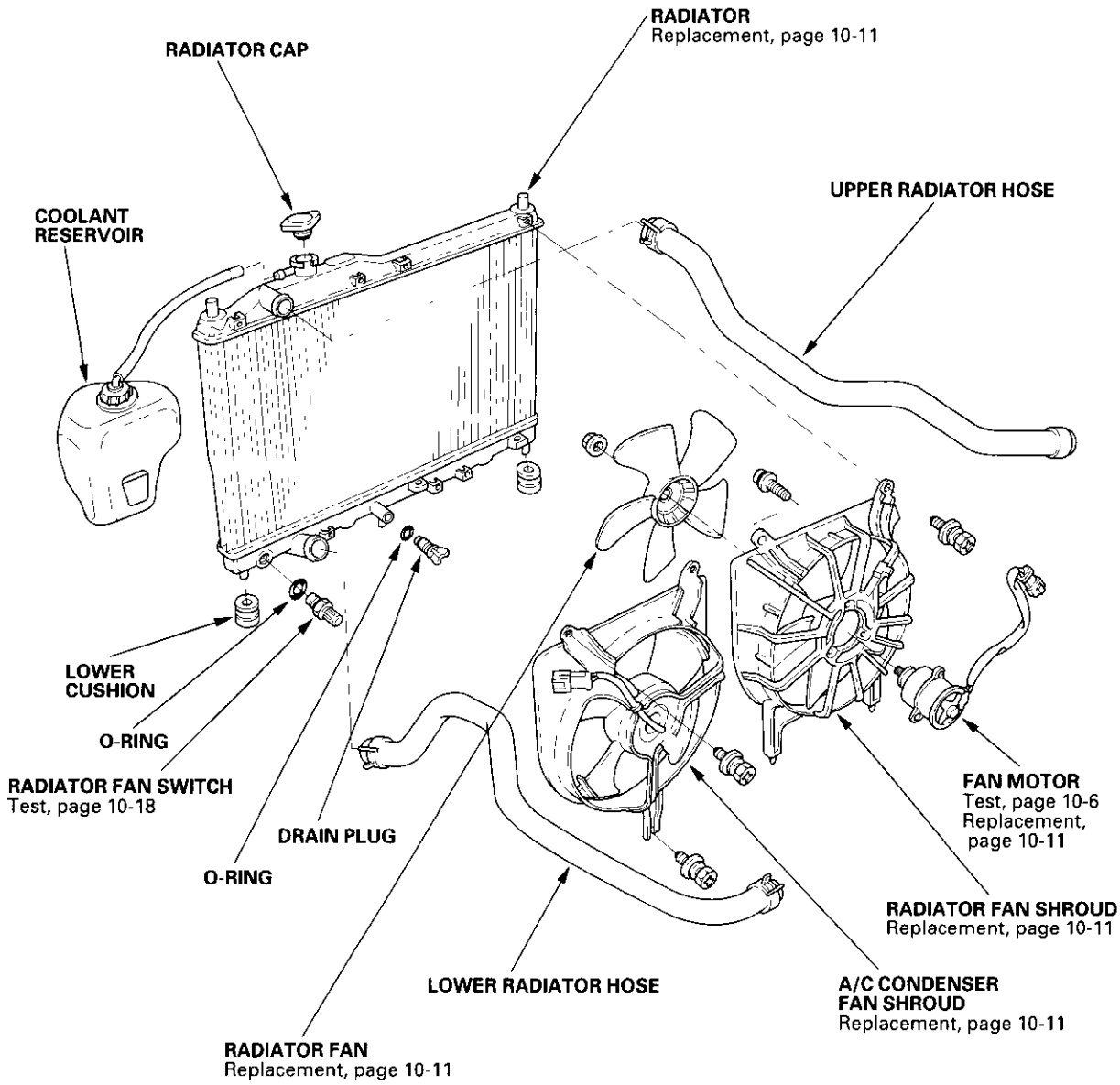

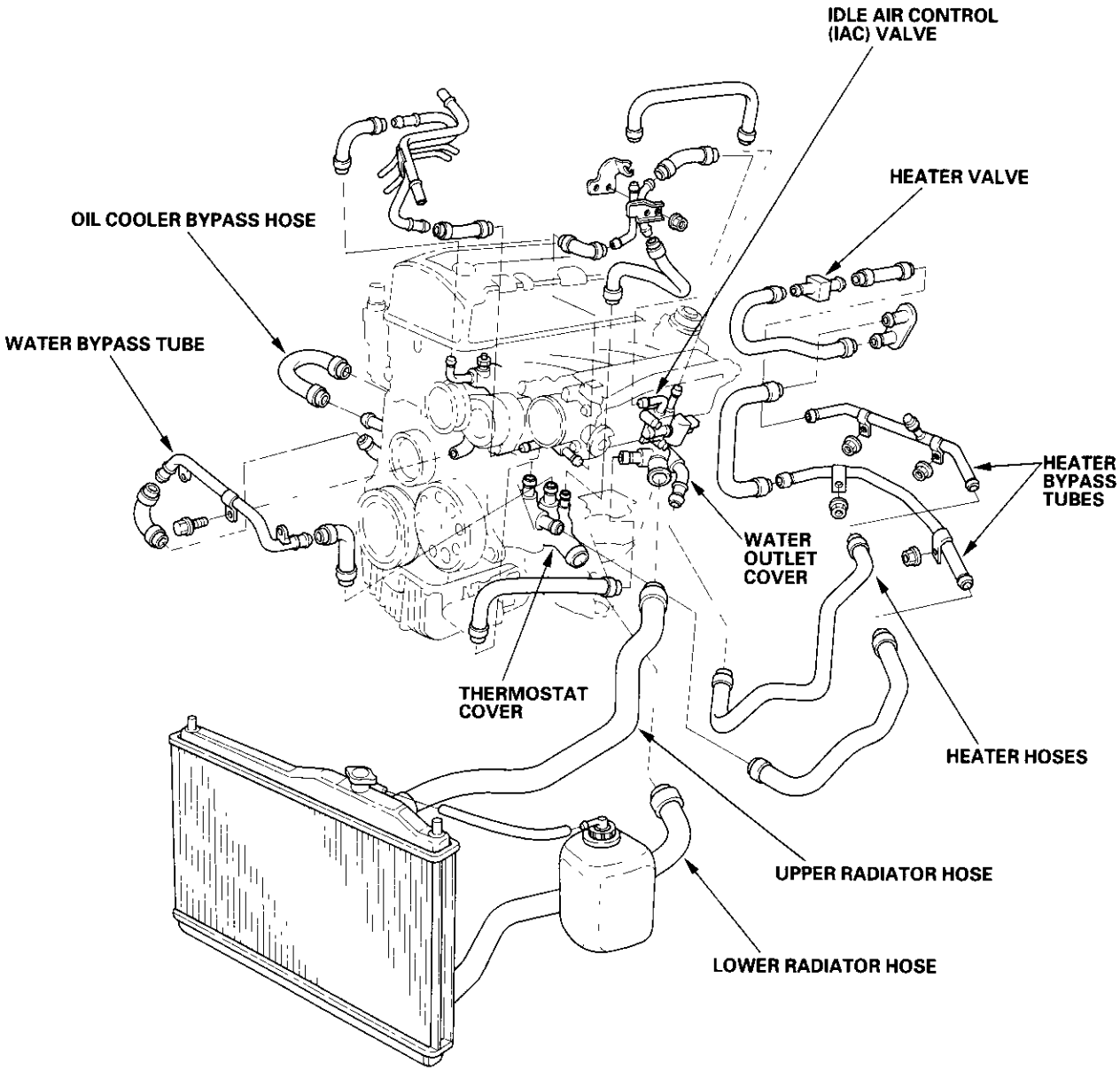
IDLE AIR CONTROL
(IAC) VALVE
HEATER VALVE
OIL COOLER BYPASS HOSE
WATER BYPASS TUBE
HEATER
BYPASS
TUBES
WATER
OUTLET
COVER
THERMOSTAT
COVER
HEATER HOSES
UPPER RADIATOR HOSE
LOWER RADIATOR HOSE

(cont'd)

## Component Location Index (cont'd)

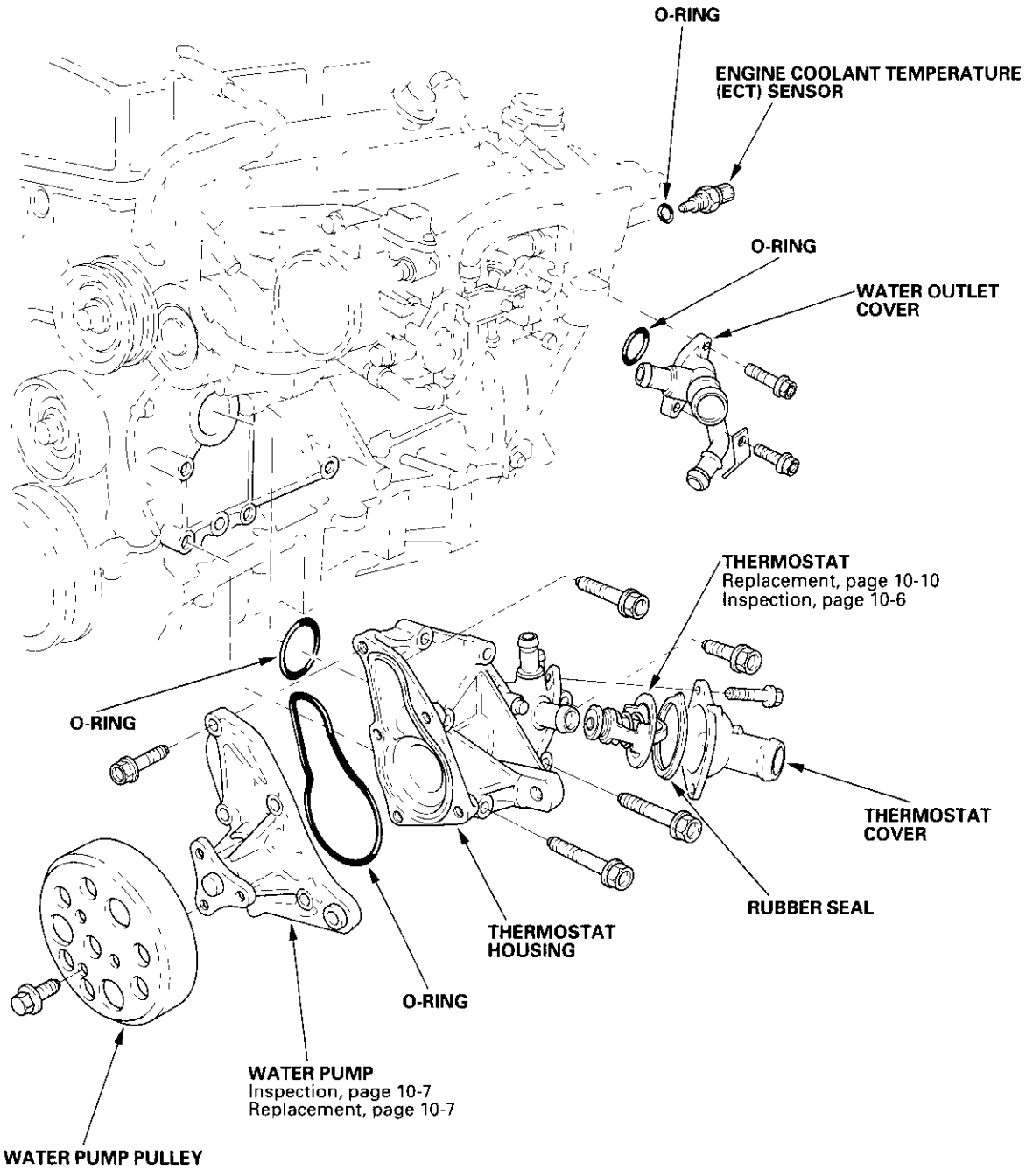

## Radiator Cap Test

1. Remove the radiator cap (A), wet its seal with engine coolant, then install it on the pressure tester (B) (commercially available).

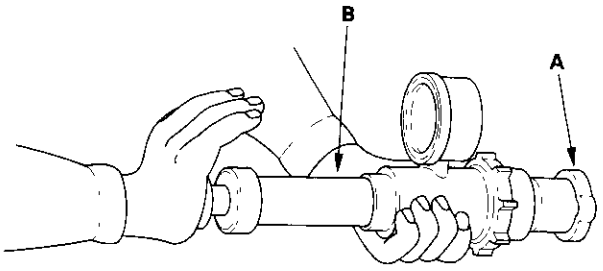


2. Apply a pressure of 93 – 123 kPa (0.95 – 1.25 kgf/cm², 14 – 18 psi).
3. Check for a drop in pressure.
4. If the pressure drops, replace the cap.

## Radiator Test

1. Wait until the engine is cool, then carefully remove the radiator cap and fill the radiator with engine coolant to the top of the filler neck.
2. Attach the pressure tester (A)(commercially available) to the radiator and apply a pressure of 93 – 123 kPa (0.95 – 1.25 kgf/cm², 14 – 18 psi).

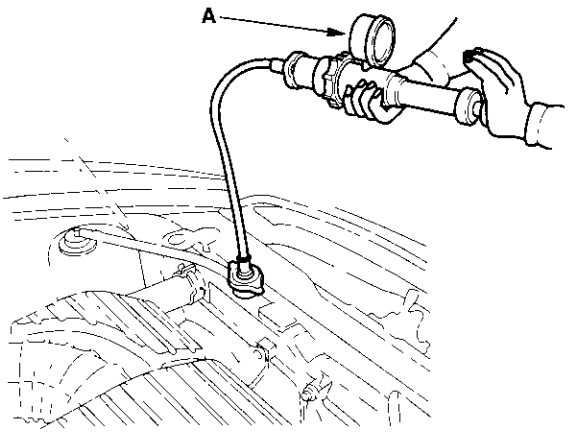


3. Inspect for engine coolant leaks and a drop in pressure.
4. Remove the tester and reinstall the radiator cap.
5. Check for engine oil in the coolant and/or coolant in the engine oil.

## Fan Motor Test

1. Disconnect the 2P connectors from the radiator fan motor (A) and condenser fan motor (B).

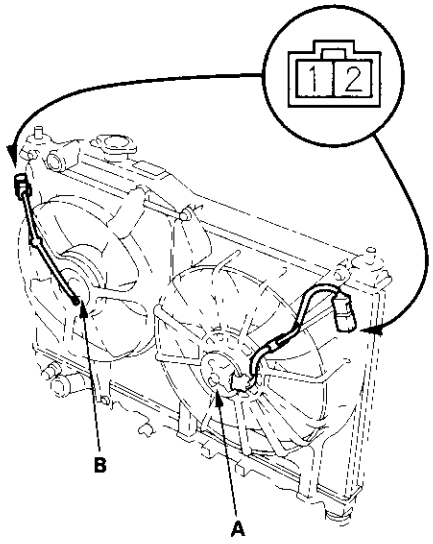


2. Test the motor by connecting battery power to the No. 2 terminal and ground to the No. 1 terminal.

3. If the motor fails to run or does not run smoothly, replace it.

## Thermostat Test

Replace the thermostat if it is open at room temperature.

To test a closed thermostat:

1. Suspend the thermostat (A) in a container of water. Do not let the thermometer (B) touch the bottom of the hot container.

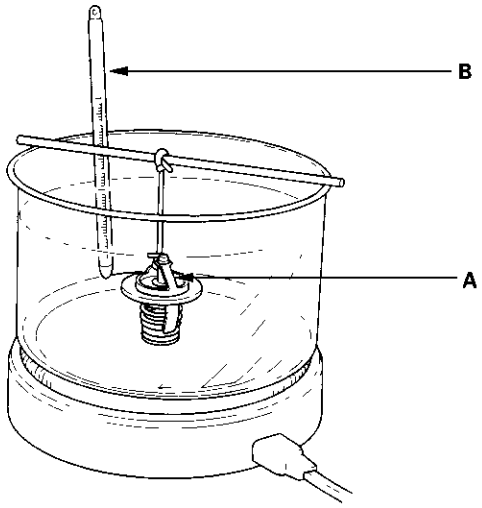


2. Heat the water and check the temperature with the thermometer. Check the temperature at which the thermostat first opens, and at which it is fully open.

3. Measure the lift height of the thermostat when it is fully open.

**STANDARD THERMOSTAT**

| | |
|---|---|
| **Lift height:** | **above 10.0 mm (0.39 in.)** |
| **Starts opening:** | **169 – 176°F (76 – 80°C)** |
| **Fully open:** | **194°F (90°C)** |

## Water Pump Inspection

1. Loosen the water pump pulley bolts.
2. Move the auto-tensioner to remove tension from the alternator-compressor belt, then remove the alternator-compressor belt (see step 8 on page 6-15).
3. Remove the water pump pulley.

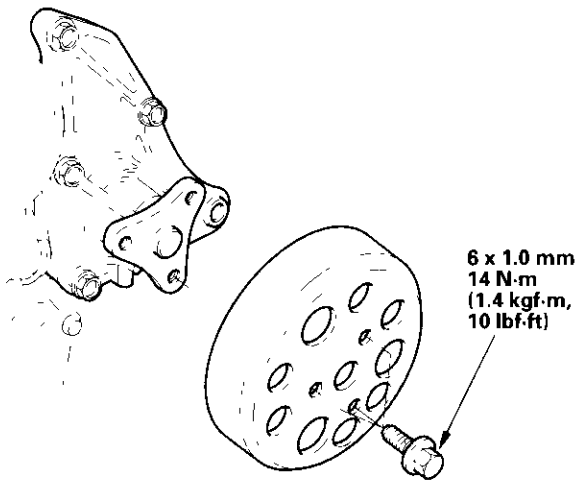


4. Turn the water pump counterclockwise. Check that it turns freely.
5. Check for signs of seal leakage. A small amount of "weeping" from the bleed hole (A) is normal.

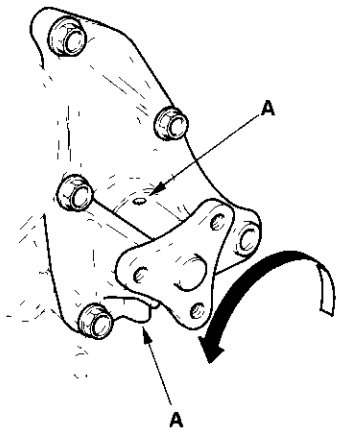


## Water Pump Replacement

1. Loosen the water pump pulley bolts.
2. Move the auto-tensioner to remove tension from the alternator-compressor belt, then remove the alternator-compressor belt (see step 8 on page 6-15).
3. Remove the water pump pulley.
4. Remove the water pump (A) by removing the six bolts.

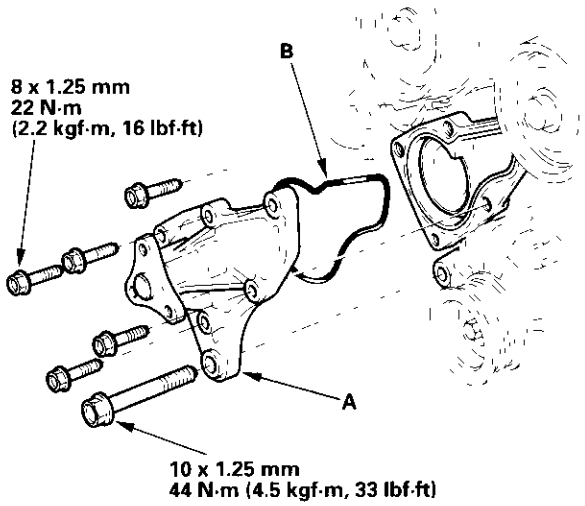


5. Clean and inspect the O-ring groove and the mating surface with the thermostat housing.
6. Install the water pump, with a new O-ring (B), in the reverse order of removal.
7. Clean up the spilled engine coolant.

## Coolant Replacement

1. Set the heater temperature control dial to maximum heat.
2. Remove the radiator cap.
3. Loosen the drain plug (A), and drain the coolant.

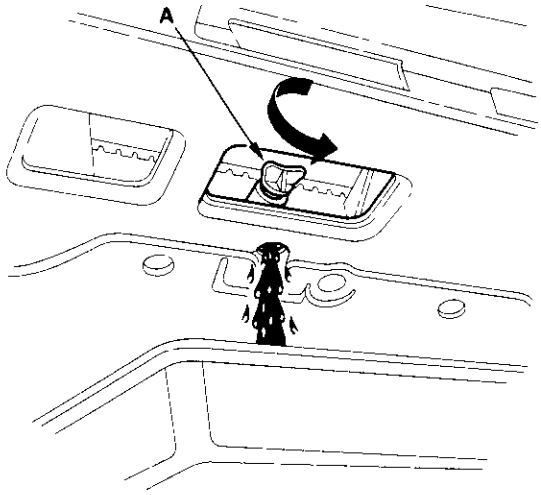


4. Remove the drain bolt (A) from the right side of the cylinder block.

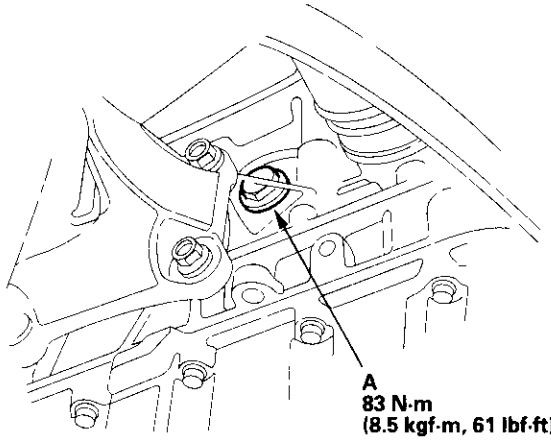


5. After the coolant has drained, apply liquid gasket, P/N 08718-0009, to the drain bolt threads, then reinstall the bolt with a new washer and tighten it securely.
6. Tighten the radiator drain plug securely.
7. Remove, drain, and reinstall the reservoir. Fill the tank to the MAX mark with Honda All Season Antifreeze/Coolant Type 2 (P/N OL999-9001).
8. Remove the bleed cap (A) from the heater bypass tube.

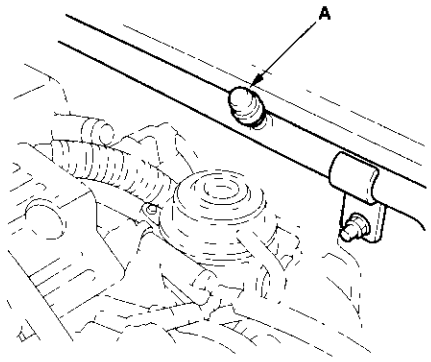


9. Loosen the air bleed bolt (A) in the intake manifold, then pour Honda All Season Antifreeze/Coolant Type 2 into the radiator to the bottom of the filler neck. Do not let coolant spill on any electrical parts or the paint. If any coolant spills, rinse it off immedeately.

NOTE:
- Always use Honda All Season Antifreeze/Coolant Type 2 (P/N OL999-9001). Using a non-Honda coolant can result in corrosion, causing the cooling system to malfunction or fail.
- Honda All Season Antifreeze/Coolant Type 2 is a mixture of 50% antifreeze and 50% water. Premixing is not required.

**Engine Coolant Refill Capacity [including reservoir capacity of 0.6 ℓ (0.6 US qt)]: 6.5 ℓ (6.9 US qt)**

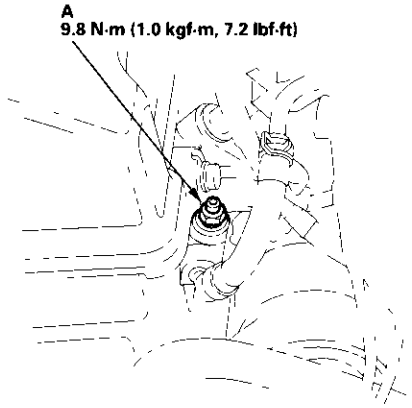

10. Tighten the bleed bolt as soon as coolant starts to run out in a steady stream.

11. Install the bleed cap on the heater bypass tube as soon as coolant starts to run out in a steady stream.

12. With the radiator cap off, start the engine and let it run until warmed up (radiator fan comes on at least twice). Then, if necessary, add more Honda All Season Antifreeze/Coolant Type 2 to bring the level back up to the bottom of the filler neck.

13. Put the radiator cap on tightly, then run the engine again and check for leaks.

## Thermostat Replacement

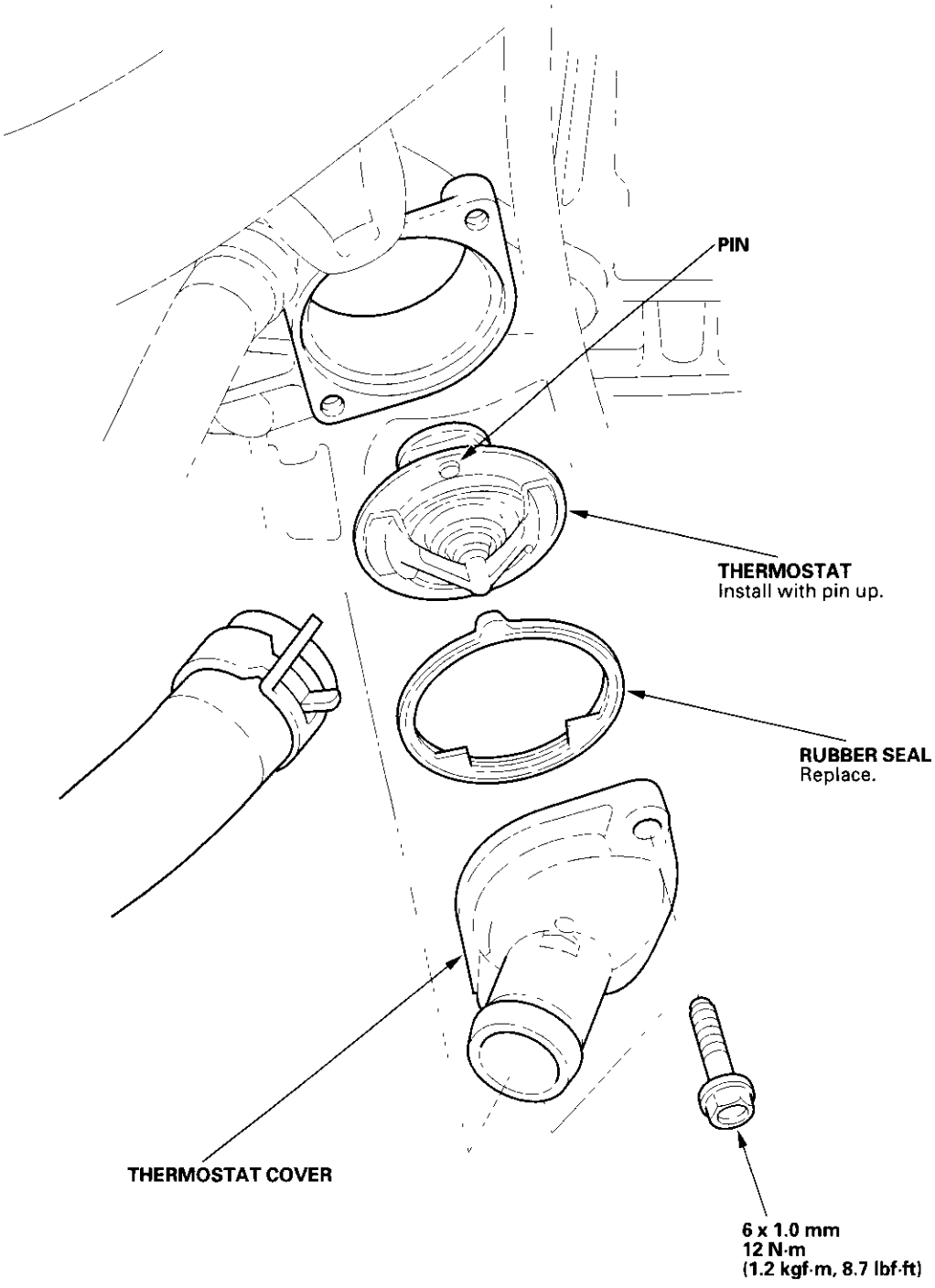

## Radiator and Fans Replacement

1. Drain engine coolant.
2. Remove the upper and lower radiator hoses.

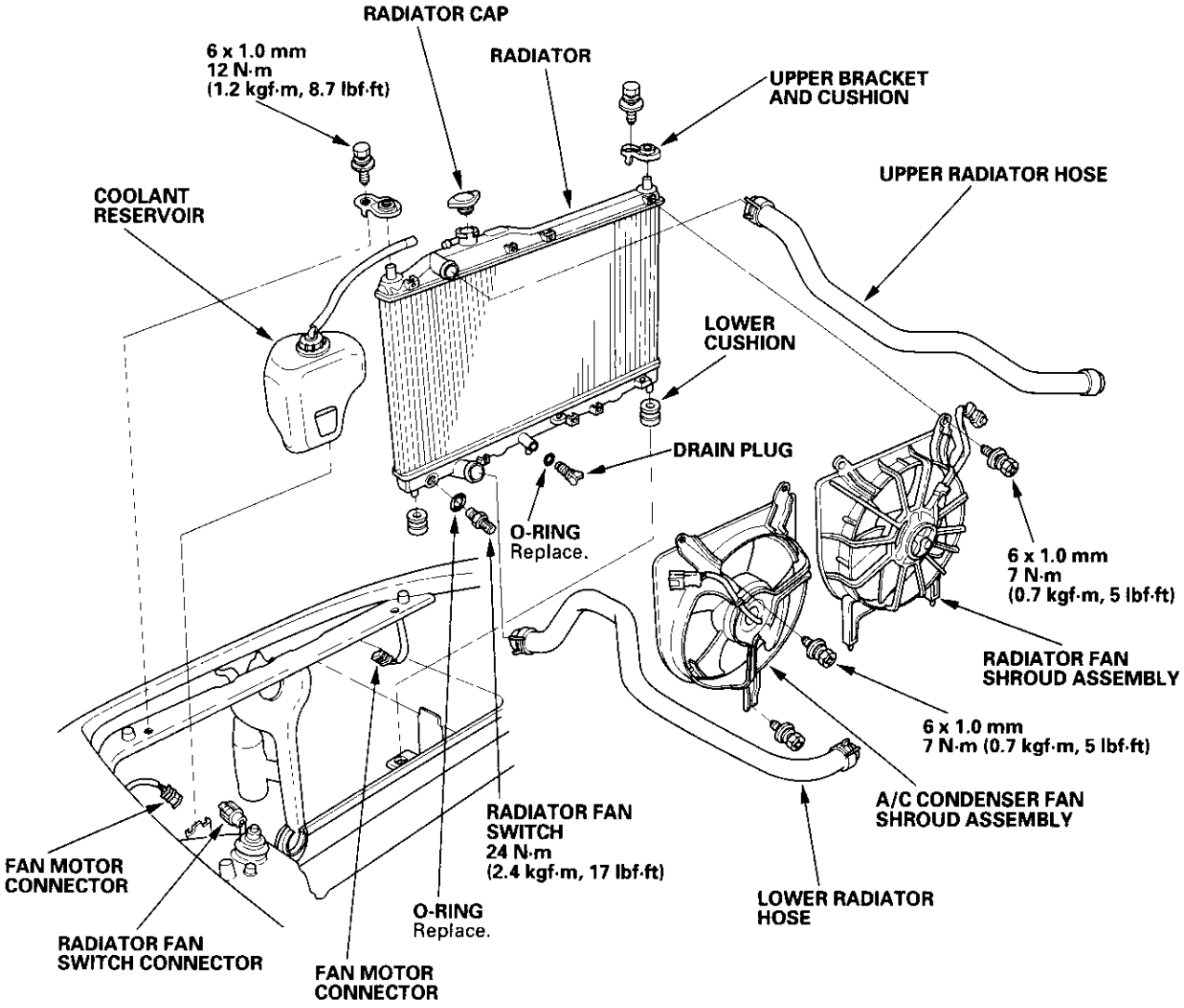


3. Disconnect the fan motor connectors and radiator fan switch connector.
4. Remove the radiator upper brackets and cushions, then pull up the radiator.
5. Remove both fan shroud assemblies and other parts from the radiator.
6. Install the radiator in the reverse order of removal. Make sure the upper and lower cushions are set securely.
7. Fill the radiator with engine coolant and bleed the air.

## Component Location Index

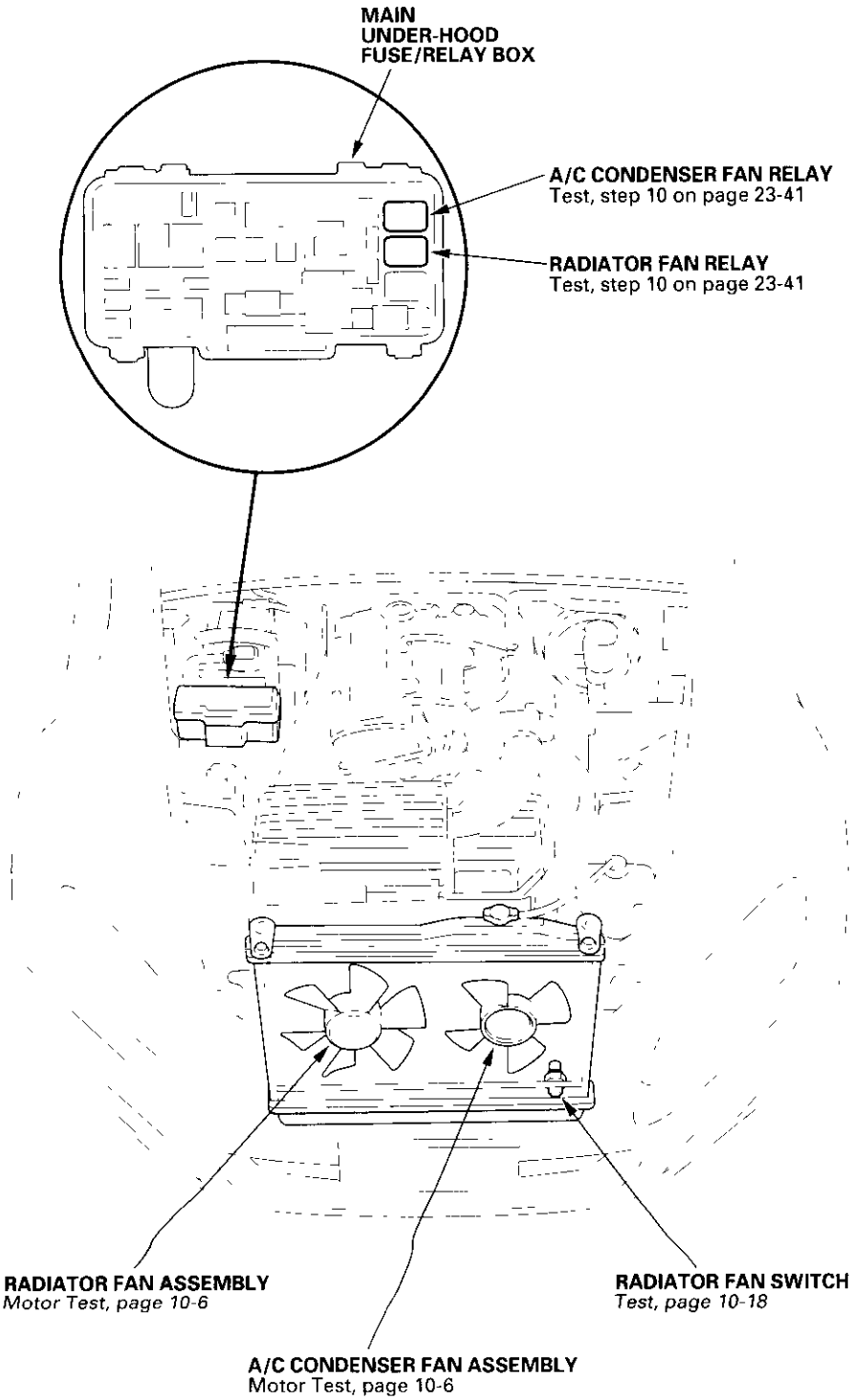

## Symptom Troubleshooting Index

Before performing any troubleshooting procedures check:
- Fuses
- Grounds
- Cleanliness and tightness of all connectors

| SYMPTOM | PROCEDURE |
|---|---|
| Radiator fan does not run at all | Radiator Fan Circuit Troubleshooting (see page 10-15). |
| Radiator fan does not run for engine cooling, but it runs with A/C ON | Radiator Fan Switch Circuit Troubleshooting (Open) (see page 10-17). |
| Radiator fan runs with ignition switch ON (II), A/C OFF, and engine temperature below 199°F (93°C) | Radiator Fan Switch Circuit Troubleshooting (Short) (see page 10-17). |

# Fan Controls

## Circuit Diagram

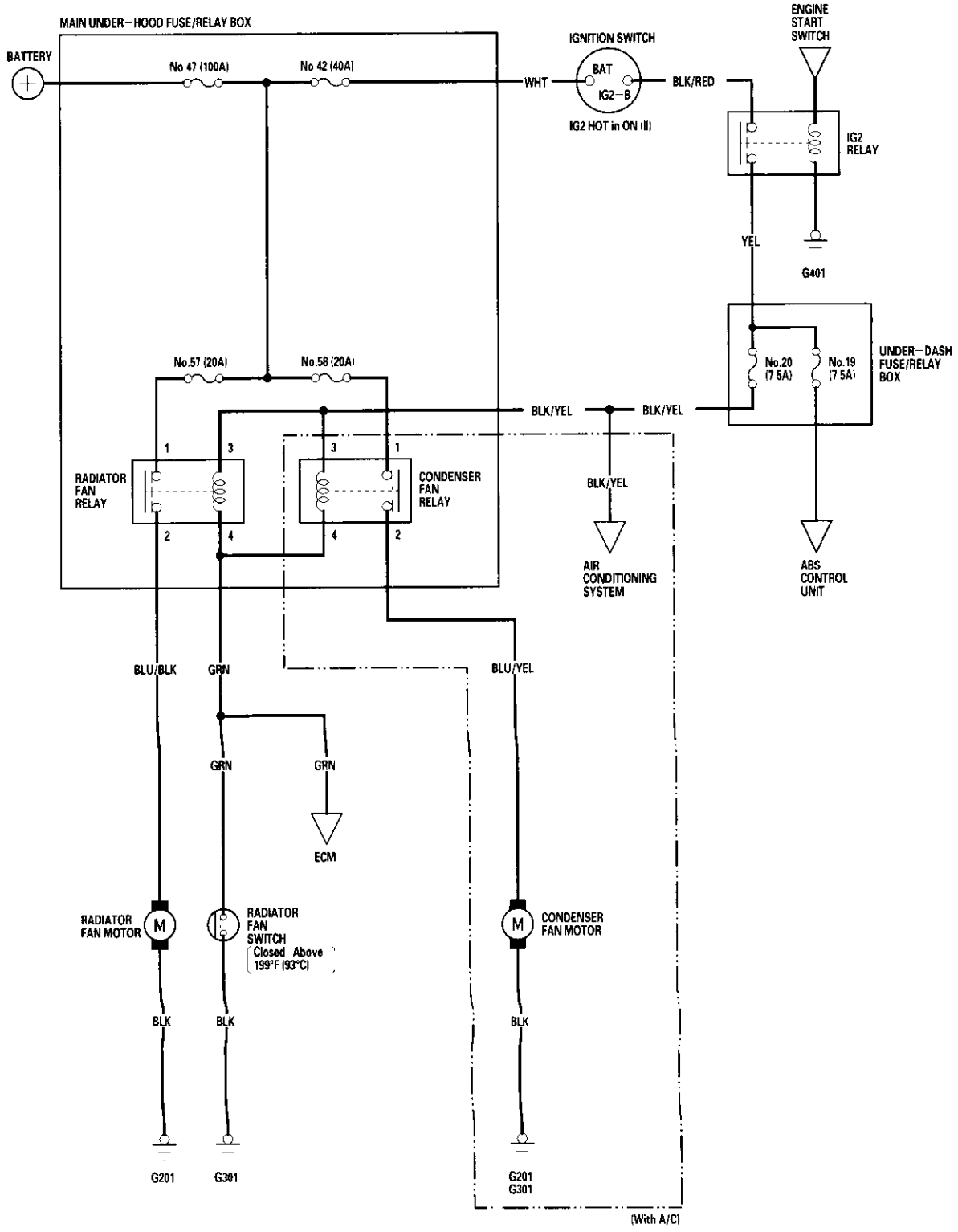

## Radiator Fan Circuit Troubleshooting

1. Check the No. 57 (20A) fuse in the main under-hood fuse/relay box, and the No. 20 (7.5A) fuse in the under-dash fuse/relay box.

   *Is the fuse (s) OK?*

   **YES** – Go to step 2.

   **NO** – Replace the fuse (s) and recheck. ■

2. Remove the radiator fan relay from the main under-hood fuse/relay box, and test it (see page 22-40).

   *Is the relay OK?*

   **YES** – Go to step 3.

   **NO** – Replace the radiator fan relay. ■

3. Measure the voltage between the No. 1 terminal of the radiator fan relay 4P socket and body ground.

**RADIATOR FAN RELAY 4P SOCKET**

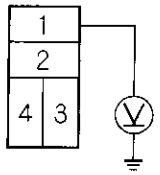


Terminal side of female terminals

*Is there battery voltage?*

**YES** – Go to step 4.

**NO** – Replace the under-hood fuse/relay box. ■

4. Connect the No. 1 and No. 2 terminals of the radiator fan relay 4P socket with a jumper wire.

**RADIATOR FAN RELAY 4P SOCKET**

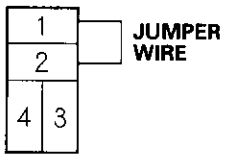


Terminal side of female terminals

*Does the radiator fan run?*

**YES** – Go to step 5.

**NO** – Go to step 6.

5. Disconnect the jumper, and turn the ignition switch ON (II). Check for voltage between the No. 3 terminal of the radiator fan relay 4P socket and body ground.

**RADIATOR FAN RELAY 4P SOCKET**

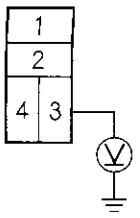


Terminal side of female terminals

*Is there battery voltage?*

**YES** – Go to step 9.

**NO** – Check for an open in the wire between the under-hood fuse/relay box and under-dash fuse/relay box. ■

(cont'd)

## Radiator Fan Circuit Troubleshooting (cont'd)

6. Disconnect the radiator fan motor 2P connector.
7. Check for continuity between the No. 2 terminal of the radiator fan relay 4P socket and the No. 2 terminal of the radiator fan motor 2P connector.

RADIATOR FAN RELAY 4P SOCKET

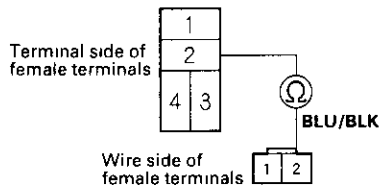


RADIATOR FAN MOTOR 2P CONNECTOR

*Is there continuity?*

**YES** – Go to step 8.

**NO** – Repair open in the wire between the under-hood fuse/relay box and the radiator fan motor 2P connector terminal No. 2. ■

8. Check for continuity between the No. 1 terminal of the radiator fan motor 2P connector and body ground.

RADIATOR FAN MOTOR 2P CONNECTOR

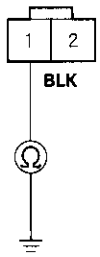


Wire side of female terminals

*Is there continuity?*

**YES** – Replace the radiator fan motor. ■

**NO** – Check for an open in the wire between radiator fan motor 2P connector terminal No. 1 and body ground. If the wire is OK, check for a poor ground at G201. ■

9. Reinstall the radiator fan relay.
10. Disconnect the radiator fan switch 2P connector.
11. Connect the No. 1 and No. 2 terminals, of the radiater fan switch 2P connector with a jumper wire.

RADIATOR FAN SWITCH 2P CONNECTOR

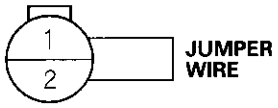


Wire side of female terminals

*Does the radiator fan run?*

**YES** – Replace the radiator fan switch. ■

**NO** – Go to step 12.

12. Remove the jumper wire, and measure the voltage between the No. 2 terminal of the radiator fan switch connector and body ground.

RADIATOR FAN SWITCH 2P CONNECTOR

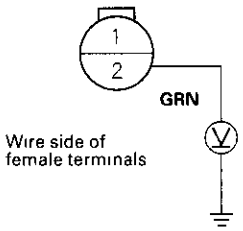


*Is there battery voltage?*

**YES** – Check for an open in the wire between radiator fan switch 2P connector terminal No. 1 and body ground. If the wire is OK, check for a poor ground at G301. ■

**NO** – Repair open in the wire between the radiator fan switch terminal No. 2 and the under-hood fuse/relay box. ■

## Radiator Fan Switch Circuit Troubleshooting (Open)

1. Disconnect the radiator fan switch 2P connector.
2. Turn the ignition switch ON (II).
3. Measure voltage between the No. 2 terminal of the radiator fan switch 2P connector and body ground.

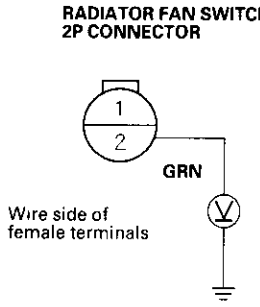


*Is there battery voltage?*

**YES** – Go to step 4.

**NO** – Repair open in the wire between the radiator fan switch 2P connector terminal No. 2 and under-hood fuse/relay box. ■

4. Turn the ignition switch OFF, and check for continuity between the No. 1 terminal of the radiator fan switch 2P connector and body ground.

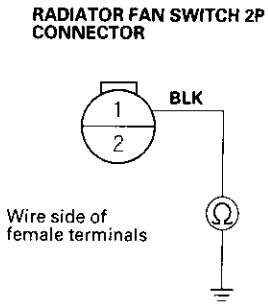


*Is there continuity?*

**YES** – Replace the radiator fan switch. ■

**NO** – Check for an open in the wire between the radiator fan switch 2P connector terminal No. 1 and body ground. If the wire is OK, check for a poor ground at G301. ■

## Radiator Fan Switch Circuit Troubleshooting (Short)

1. Remove the radiator fan relay from the main under-hood fuse/relay box, and test it (see page 22-40).

*Is the relay OK?*

**YES** – Go to step 2.

**NO** – Replace the radiator fan relay. ■

2. Remove the radiator fan switch, and test it (see page 10-18).

*Is the radiator fan switch OK?*

**YES** – Go to step 3.

**NO** – Replace the radiator fan switch. ■

3. Disconnect the negative cable from the battery.
4. Disconnect Engine Control Module (ECM) connector A (25P) and the under-hood fuse/relay box 16P connector.
5. Check for continuity between the No. 2 terminal of the radiator fan switch 2P connector and body ground.

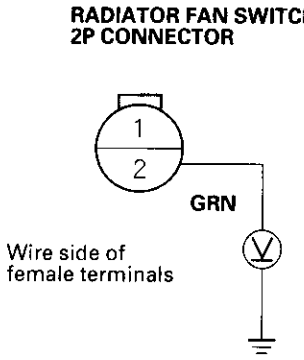


*Is there continuity?*

**YES** – Repair short in the wire between the radiator fan switch 2P connector terminal No. 2 and main under-hood fuse/relay box. ■

**NO** – Replace the main under-hood fuse/relay box. ■

## Radiator Fan Switch Test

NOTE: Bleed air from the cooling system after installing the radiator fan switch (see page 10-8).

1. Remove the radiator fan switch from the radiator (see page 10-11).
2. Suspend the radiator fan switch (A) in a container of water as shown.

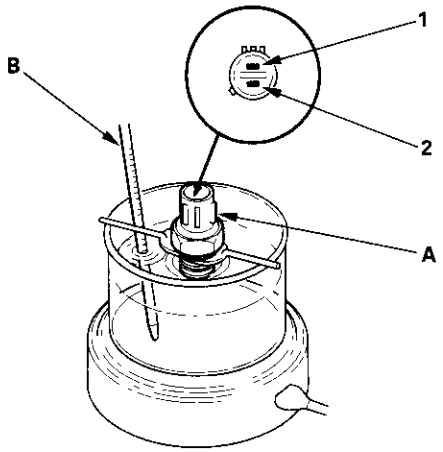


3. Heat the water and check the temperature with a thermometer. Do not let the thermometer (B) touch the bottom of the hot container.
4. Measure the continuity between terminal No. 1 and terminal No. 2 according to the table.

| Operation | | Temperature | Terminal 1 | 2 |
|---|---|---|---|---|
| SWITCH | ON | 196°—203°F (91°—95°C) | ○—○ | |
| | OFF | 5°—15°F (3°—8°C) lower than the temperature when it goes on | | |

# Fuel and Emissions


## Fuel and Emissions Systems
Special Tools ..... 11-2
General Troubleshooting Information ..... 11-3
DTC Troubleshooting Index .... 11-6
Symptom Troubleshooting Index ..... 11-9
System Descriptions ..... 11-10

## PGM-FI System
Component Location Index .... 11-41
DTC Troubleshooting ..... 11-43
MIL Circuit Troubleshooting ... 11-81
DLC Circuit Troubleshooting .. 11-85
Injectors Replacement ..... 11-85
Primary HO2S Replacement ... 11-87
Secondary HO2S Replacement ..... 11-87

## Idle Control System
Component Location Index .... 11-90
DTC Troubleshooting ..... 11-91
A/C Signal Circuit Troubleshooting ..... 11-94
Alternator FR Signal Circuit Troubleshooting ..... 11-96
Starter Switch Signal Circuit Troubleshooting ..... 11-97
Electrical Power Steering (EPS) Signal Circuit Troubleshooting ..... 11-98
Brake Pedal Position Switch Signal Circuit Troubleshooting ..... 11-99
Idle Speed Inspection ..... 11-100
ECM Idle Learn Procedure ..... 11-100

## Fuel Supply System
Component Location Index .... 11-101
PGM-FI Main Relay Circuit Troubleshooting ..... 11-102
Fuel Pressure Relieving ..... 11-105
Fuel Pressure Test ..... 11-105
Fuel Pump Test ..... 11-107
Fuel Lines Inspection ..... 11-108
Fuel Tube/Quick-Connect Fitting Precautions ..... 11-110
Fuel Tube/Quick-Connect Fittings Removal ..... 11-110
Fuel Tube/Quick-Connect Fittings Installation ..... 11-111
Fuel Pressure Regulator Replacement ..... 11-113
Fuel Filter Replacement ..... 11-113
Fuel Pump/Fuel Gauge Sending Unit Replacement ..... 11-114
Fuel Tank Replacement ..... 11-115
Fuel Gauge Sending Unit Test ..... 11-119
Low Fuel Indicator Light Test ..... 11-120

## Intake Air System
Component Location Index .... 11-121
Throttle Body Test ..... 11-122
Air Cleaner Element Replacement ..... 11-123
Throttle Cable Adjustment ..... 11-124
Throttle Cable Removal/ Installation ..... 11-125
Throttle Body Removal/ Installation ..... 11-126
Throttle Body Disassembly/ Reassembly ..... 11-127

## Catalytic Converter System
DTC Troubleshooting ..... 11-128

## PCV System
PCV Valve Inspection and Test ..... 11-129

## EVAP System
Component Location Index .... 11-130
DTC Troubleshooting ..... 11-131
EVAP Two Way Valve Test ..... 11-145
Fuel Tank Vapor Control Valve Test ..... 11-146
Fuel Tank Vapor Control Valve Replacement ..... 11-147

## Pulsed Secondary Air Injection System
Component Location Index .... 11-148
DTC Troubleshooting ..... 11-149
Air Pump/Air Pump Relay Removal/Installation ..... 11-159
Air Pump Relay Test ..... 11-160
Air Pump/Electric Current Sensor Removal/ Installation ..... 11-160




## Special Tools

| Ref. No. | Tool Number | Description | Qty |
|---|---|---|---|
| ① | A973X-041-XXXXX | Vacuum Pump/Gauge, 0 – 30 in.Hg | 1 |
| ② | 07JAZ-001000B | Vacuum/Pressure Gauge, 0 – 4 in.Hg | 1 |
| ③ | 07SAZ-001000A | Backprobe Set | 2 |
| ④ | 07VAJ-0040100 | Fuel Pressure Gauge Adapter | 1 |
| ⑤ | 07406-004000A | Fuel Pressure Gauge | 1 |



①

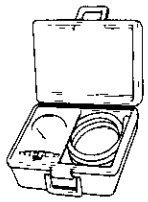

②

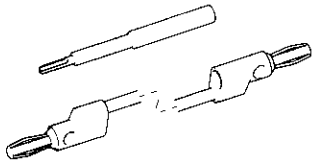

③

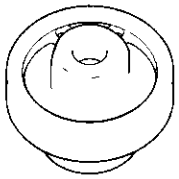

④



⑤

# General Troubleshooting Information

## Intermittent Failures

The term "intermittent failure" means a system may have had a failure, but it checks OK now. If the Malfunction Indicator Lamp (MIL) on the dash does not come on, check for poor connections or loose wires at all connectors related to the circuit that you are troubleshooting.

## Opens and Shorts

"Open" and "Short" are common electrical terms. An open is a break in a wire or at a connection. A short is an accidental connection of a wire to ground or to another wire. In simple electronics, this usually means something won't work at all. With complex electronics (such as ECM's) this can sometimes mean something works, but not the way it's supposed to.

## How to Use the PGM Tester or a Scan Tool

**If the MIL (Malfunction Indicator Lamp) has come on**

1. Start the engine and check the MIL.

2. If the MIL stays on, connect the Honda PGM Tester (A) or an OBDII scan tool to the data link connector (DLC) (B).
   For '00-01 models, the DLC is located under the passenger's side of the dashboard.
   For '02-03 models, the DLC is located behind the driver's side of the front console.

**'00-01 models:**

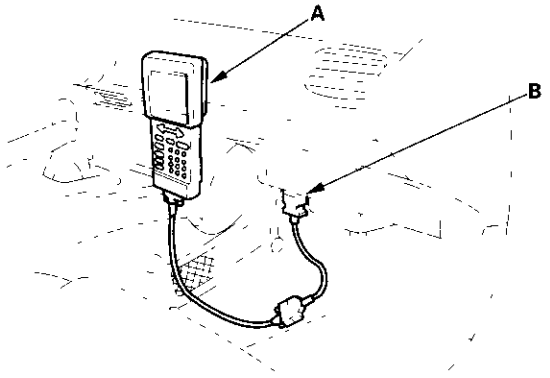


**'02-03 models:**

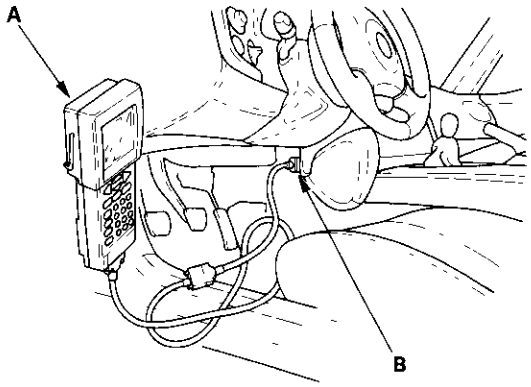


3. Turn the ignition switch ON (II).

4. Check the diagnostic trouble codes (DTC) and note it. Then also check the freeze frame data. Refer to the DTC Troubleshooting Index and begin the appropriate troubleshooting procedure.

   NOTE:
   - Freeze data indicates the engine conditions when the first malfunction, misfire or fuel trim malfunction was detected.
   - The scan tool and the Honda PGM Tester can read the DTC, freeze frame data, current data, and other engine control module (ECM) data.
   - For specific operations, refer to the user's manual that came with the scan tool or Honda PGM Tester.

**If the MIL did not come on**
If the MIL did not come on but there is a driveablility problem, refer to the Symptom Troubleshooting Index in this section.

**If you can't duplicate the DTC**
Some of the troubleshooting in this section requires you to reset the ECM and try to duplicate the DTC. If the problem is intermittent and you can't duplicate the code, do not continue through the procedure. To do so will only result in confusion and, possibly, a needlessly replaced ECM.

(cont'd)

## General Troubleshooting Information (cont'd)

### How to Reset the ECM

You can reset the ECM in either of two ways:

NOTE: after resetting the ECM, do the ECM idle learn procedure (see page 11-100).

### Reset the ECM with the OBD II scan tool or Honda PGM Tester

1. Turn the ignition switch ON (II). Do not start the engine.
2. Use the OBD II scan tool or Honda PGM Tester to clear the DTC.

NOTE: For the specific operations, refer to the use's manual that came with the scan tool or Honda PGM Tester.

### Reset the ECM by removing the fuse

1. Turn the ignition switch OFF.
2. Remove the No. 25 BACK UP (7.5 A) fuse (A) from the under-dash fuse/relay box (B) for 60 seconds.

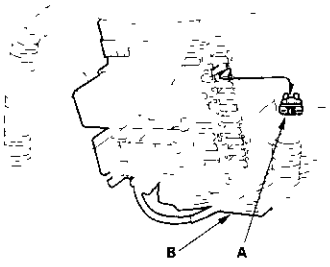


### How to End a Troubleshooting Session (required after any troubleshooting)

1. Reset the ECM as described above.
2. Turn the ignition switch OFF.
3. Disconnect the OBDII scan tool or Honda PGM Tester from the data link connector (DLC).

   NOTE:
   - The ECM is part of the immobilizer system. If you replace the ECM, it will have a different immobilizer code. In order for the engine to start, you must rewrite the immobilizer code with the Honda PGM Tester.
   - Do the idle learn procedure (see page 11-100).

### How to Remove the ECM for Testing

NOTE:
- Make sure you have the anti theft code for the radio, then write down the frequencies for the radio's preset buttons before you disconnect the negative cable from the battery.
- Enter the anti theft code, then enter the customer's radio station presets, and set the clock after you reconnect the negative cable to the battery.

If the inspection for a trouble code requires voltage or resistance checks at the ECM connectors, remove the ECM and test it:

1. Disconnect the negative cable from the battery.
2. Remove the left side kick panel (A) to expose the ECM (B).

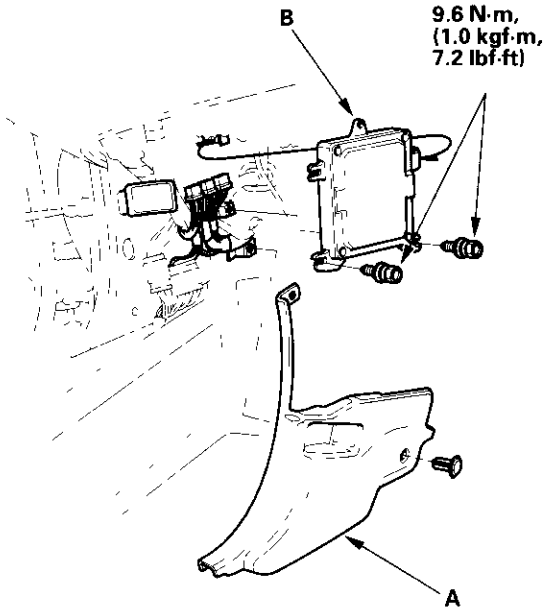


3. Remove the two bolts from the ECM (B).
4. Disconnect the ECM connectors.
5. Install the ECM in the reverse order of removal.
6. Reconnect the negative cable to the battery.
7. Do the idle learn procedure (see page 11-100).

## How to Troubleshoot Circuits at the ECM

### Special Tools Required

- Digital multimeter KS-AHM-32-003 (1) or a commercially available digital multimeter
- Backprobe Set 07SAZ-001000A (2)

1. Connect the backprobe adapters (A) to the stacking patch cords (B), and connect the cords to a multimeter (C).

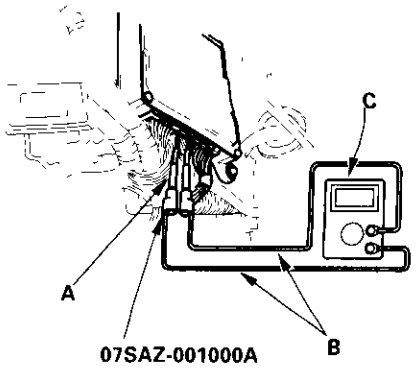


2. Using the wire insulation as a guide for the contoured tip of the backprobe adapter, gently slide the tip into the connector from the wire side until it touches the end of the wire terminal.

3. If you cannot get to the wire side of the connector or the wire side is sealed (A), disconnect the connector and touch the tester probe (B) to terminals (C) from the terminal side. Do not force the probe into the connector.

**NOTICE**

Do not puncture the insulation on a wire. Punctures can cause poor or intermittent electrical connections.

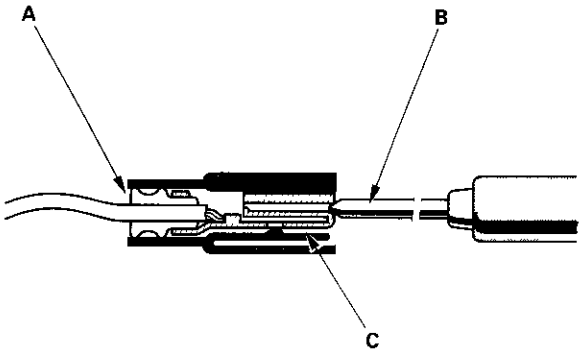


## How to Substitute the ECM for Testing Purposes

Use this procedure if you need a known-good ECM to test a vehicle. It allows you to swap a ECM from a "donor" vehicle without having to program it to the test vehicle's ignition key.

1. Disconnect the negative cable from the battery on the test vehicle.
2. Cut a temporary ignition key for the test vehicle with a non-immobilizer key blank.
3. Remove the ECM from the test vehicle.
4. Write the test vehicle's VIN on the ECM you just *removed to avoid confusing it with the donor* vehicle's ECM.
5. Disconnect the negative cable from the battery on the donor vehicle.
6. Remove the known-good ECM from the donor vehicle, and install it in the test vehicle.
7. Tape the donor vehicle's ignition key head-to-head to the test vehicle's temporary key (A). The ECM will recognize the code from the donor vehicle's key (B) and allow you to start the engine with the temporary key.

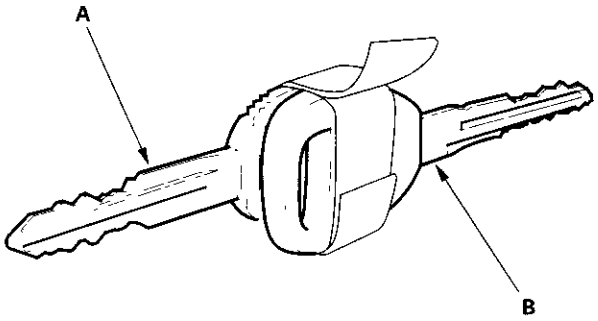


8. After completing your tests, reinstall both ECMs, and destroy the temporary key.
9. Reconnect the negative cable to the battery.

## DTC Troubleshooting Index

| DTC (MIL indication *) | Temporary DTC | Detection Item | Note |
|---|---|---|---|
| P0107 (3) | ——— | Manifold Absolute Pressure (MAP) Sensor Circuit Low Voltage | (see page 11-43) |
| P0108 (3) | ——— | Manifold Absolute Pressure (MAP) Sensor Circuit High Voltage | (see page 11-44) |
| P0112 (10) | ——— | Intake Air Temperature (IAT) Sensor Circuit Low Voltage | (see page 11-46) |
| P0113 (10) | ——— | Intake Air Temperature (IAT) Sensor Circuit High Voltage | (see page 11-47) |
| P0116 (86) | P0116 | Engine Coolant Temperature (ECT) Sensor Range /Performance Problem | (see page 11-48) |
| P0117 (6) | ——— | Engine Coolant Temperature (ECT) Sensor Circuit Low Input | (see page 11-48) |
| P0118 (6) | ——— | Engine Coolant Temperature (ECT) Sensor Circuit High Input | (see page 11-49) |
| P0122 (7) | ——— | Throttle Position (TP) Sensor Circuit Low Input | (see page 11-50) |
| P0123 (7) | ——— | Throttle Position (TP) Sensor Circuit High Input | (see page 11-53) |
| P0128 (87)** | P0128 | Cooling System Malfunction | (see page 11-54) |
| P0131 (1) | ——— | Primary Heated Oxygen Sensor (Primary HO2S) (Sensor 1) Circuit Low Voltage | (see page 11-55) |
| P0132 (1) | ——— | Primary Heated Oxygen Sensor (Primary HO2S) (Sensor 1) Circuit High Voltage | (see page 11-56) |
| P0133 (61) | P0133 | Primary Heated Oxygen Sensor (Primary HO2S) (Sensor 1) Slow Response | (see page 11-57) |
| P0135 (41) | ——— | Primary Heated Oxygen Sensor (Primary HO2S) (Sensor 1) Heater Circuit Malfunction | (see page 11-61) |
| P0137 (63) | P0136 | Secondary Heated Oxygen Sensor (Secondary HO2S) (Sensor 2) Circuit Low Voltage | (see page 11-58) |
| P0138 (63) | P0136 | Secondary Heated Oxygen Sensor (Secondary HO2S) (Sensor 2) Circuit High Voltage | (see page 11-59) |
| P0139 (63) | P0136 | Secondary Heated Oxygen Sensor (Secondary HO2S) (Sensor 2) Slow Response | (see page 11-60) |
| P0141 (65) | ——— | Secondary Heated Oxygen Sensor (Secondary HO2S) (Sensor 2) Heater Circuit Malfunction | (see page 11-61) |
| P0171 (45) | P0170 | Fuel System Too Lean | (see page 11-63) |
| P0172 (45) | P0170 | Fuel System Too Rich | (see page 11-63) |
| P0300 and some of P0301 (71) P0302 (72) P0303 (73) P0304 (74) | P1399 | Random Misfire | (see page 11-64) |
| P0301 (71) | P1399 | No. 1 Cylinder Misfire | (see page 11-65) |
| P0302 (72) | P1399 | No. 2 Cylinder Misfire | (see page 11-65) |
| P0303 (73) | P1399 | No. 3 Cylinder Misfire | (see page 11-65) |
| P0304 (74) | P1399 | No. 4 Cylinder Misfire | (see page 11-65) |

*: These DTCs are indicated by a blinking Malfunction Indicator Lamp (MIL) when the SCS service signal line is jumped with the Honda PGM Tester.
**: '02-03 models

| DTC (MIL indication *) | Temporary DTC | Detection Item | Note |
|---|---|---|---|
| P0325 (23) | —— | Knock Sensor Circuit Malfunction | (see page 11-70) |
| P0335 (4) | —— | Crankshaft Position (CKP) Sensor Circuit No Signal | (see page 11-73) |
| P0336 (4) | —— | Crankshaft Position (CKP) Sensor Intermittent Interruption | (see page 11-73) |
| P0410 (60) | P0410 | Air Pump Circuit Malfunction | (see page 11-149) |
| P0411 (60) | P0411 | Secondary Air Injection System Incorrect Flow | (see page 11-153) |
| P0420 (67) | —— | Catalyst System Efficiency Below Threshold | (see page 11-128) |
| P0451 (91) | P0451 | Fuel Tank Pressure (FTP) Sensor Range/ Performance Problem | (see page 11-131) |
| P0452 (91) | P0450 | Fuel Tank Pressure (FTP) Sensor Circuit Low Voltage | (see page 11-132) |
| P0453 (91) | P0450 | Fuel Tank Pressure (FTP) Sensor Circuit High Voltage | (see page 11-133) |
| P0500 (17) | —— | Vehicle Speed Sensor (VSS) Circuit Malfunction | (see page 11-75) |
| P0505 (14) | P0505 | Idle Control System Malfunction | (see page 11-91) |
| P1106 (13) | P1106 | Barometric Pressure (BARO) Sensor Range/ Performance Problem | (see page 11-77) |
| P1107 (13) | —— | Barometric Pressure (BARO) Sensor Circuit Low Voltage | (see page 11-77) |
| P1108 (13) | —— | Barometric Pressure (BARO) Sensor Circuit High Voltage | (see page 11-77) |
| P1121 (7) | P1121 | Throttle Position (TP) Sensor Lower Than Expected | (see page 11-51) |
| P1122 (7) | P1122 | Throttle Position (TP) Sensor Higher Than Expected | (see page 11-52) |
| P1128 (5) | P1128 | Manifold Absolute Pressure (MAP) Sensor Signal Lower Than Expected | (see page 11-45) |
| P1129 (5) | P1129 | Manifold Absolute Pressure (MAP) Sensor Signal Higher Than Expected | (see page 11-45) |

*: These DTCs are indicated by a blinking MIL when the SCS service signal line is jumped with the Honda PGM Tester.

(cont'd)

## DTC Troubleshooting Index (cont'd)

| DTC (MIL indication *) | Temporary DTC | Detection Item | Note |
|---|---|---|---|
| P1259 (22) | P1257 | VTEC System Malfunction | (see page 6-6) |
| P1297 (20) | —— | Electrical Load Detector (ELD) Circuit Low Voltage | (see page 11-78) |
| P1298 (20) | —— | Electrical Load Detector (ELD) Circuit High Voltage | (see page 11-79) |
| P1361 (8) | —— | Camshaft Position (CMP) Sensor A (Top Dead Center (TDC) Sensor) Intermittent Interruption | (see page 11-71) |
| P1362 (8) | —— | Camshaft Position (CMP) Sensor A (Top Dead Center (TDC) Sensor) No Signal | (see page 11-71) |
| P1366 (58) | —— | Camshaft Position (CMP) Sensor B (Top Dead Center (TDC) Sensor) Intermittent Interruption | (see page 11-71) |
| P1367 (58) | —— | Camshaft Position (CMP) Sensor B (Top Dead Center (TDC) Sensor) No Signal | (see page 11-71) |
| P1410 (60) | P1410 | Air Pump Malfunction | (see page 11-155) |
| P1415 (83) | —— | Air Pump Electric Current Sensor Circuit Low Voltage | (see page 11-156) |
| P1416 (83) | —— | Air Pump Electric Current Sensor Circuit High Voltage | (see page 11-158) |
| P1456 (90) | P1456 | Evaporative Emissions (EVAP) Control System Leakage (Fuel Tank System) | (see page 11-135) |
| P1457 (90) | P1457 | Evaporative Emissions (EVAP) Control System Leakage (EVAP Canister System) | (see page 11-140) |
| P1519 (14) | —— | Idle Air Control (IAC) Valve Circuit Malfunction | (see page 11-92) |
| P1607 (—) | —— | Engine Control Module (ECM) Internal Circuit Malfunction | (see page 11-80) |

*: These DTCs are indicated by a blinking MIL when the SCS service signal line is jumped with the Honda PGM Tester.

## Symptom Troubleshooting Index

These symptoms DO NOT trigger Diagnostic Trouble Codes (DTCs) or cause the Malfunction Indicator Lamp (MIL) to come on. If the MIL is reported on, check for DTCs. If the vehicle has one of these symptoms, do the diagnostic procedure for it, in the sequence listed, until you find the cause.

| Symptom | Diagnostic procedure | Also check for |
|---|---|---|
| Engine will not start (MIL works OK, no DTCs set) | 1. Test the battery (see page 22-39)<br>2. Test the starter (see page 4-7)<br>3. Test the fuel pump (see page 11-107)<br>4. Troubleshoot the PGM-FI main relay circuit (see page 11-102) | • Low compression<br>• Intake air leaks<br>• Locked up engine<br>• Broken timing chain<br>• Contaminated fuel |
| Engine will not start (MIL comes on and stays on, or never comes on at all, no DTCs set) | Troubleshoot the MIL circuit (see page 11-81) | |
| Engine will not start (immobilizer indicator comes on) | Troubleshoot the immobilizer system (see page 22-120) | |
| Hard starting (MIL works OK, no DTCs set) | 1. Test the battery (see page 22-39)<br>2. Check the fuel pressure (see page 11-105) | • Low compression<br>• Intake air leaks<br>• Contaminated fuel |
| Cold fast idle too low (MIL works OK, no DTCs set) | 1. Do the idle learn procedure (see page 11-100).<br>2. Check the idle speed (see page 11-100) | |
| Cold fast idle too high (MIL works OK, no DTCs set) | 1. Do the idle learn procedure (see page 11-100).<br>2. Check the idle speed (see page 11-100)<br>3. Inspect/adjust the throttle cable (see page 11-124)<br>4. Inspect and test the throttle body (see page 11-122) | |
| Idle speed fluctuates (MIL works OK, no DTCs set) | 1. Do the idle learn procedure (see page 11-100).<br>2. Check the idle speed (see page 11-100)<br>3. Inspect/adjust the throttle cable (see page 11-124)<br>4. Inspect and test the throttle body (see page 11-122) | Intake air leaks |
| Low power (MIL works OK, no DTCs set) | 1. Check the fuel pressure (see page 11-105)<br>2. Inspect and test the throttle body (see page 11-122)<br>3. Inspect/adjust the throttle cable (see page 11-124) | Low compression |
| Engine stalls (MIL works OK, no DTCs set) | 1. Do the idle learn procedure (see page 11-100).<br>2. Check the fuel pressure (see page 11-105)<br>3. Check the idle speed (see page 11-100)<br>4. Troubleshoot the brake pedal position switch signal circuit (see page 11-99) | • Intake air leaks<br>• Faulty harness and sensor connections |
| Difficult to refuel (MIL works OK, no DTCs set) | 1. Test the fuel tank vapor control valve (see page 11-146)<br>2. Inspect the fuel tank signal tube between the fuel pipe and the fuel tank vapor control valve<br>3. Inspect the fuel tank vent tube between the EVAP canister and the fuel tank vapor control valve<br>4. Check the EVAP canister | |
| Fuel overflows during refueling (No DTCs set) | Replace the fuel tank vapor control valve (see page 11-147) | |

## System Descriptions

### Electronic Control System

The functions of the fuel and emissions control systems are managed by the engine control module (ECM).

**Fail-safe Function**
When an abnormality occurs in the signal from a sensor, the ECM ignores the signal and assumes a pre-programmed value for the sensor that allows the engine to continue to run.

**Back-up Function**
When an abnormality occurs in the ECM, the injectors are controlled by a back-up circuit independent of the system to permit minimal driving.

**Self-diagnosis**
When an abnormality occurs in the signal from a sensor, the ECM supplies ground for the MIL and stores the DTC in erasable memory. When the ignition is first turned ON (II), the ECM supplies ground for the MIL for 2 seconds to check the MIL bulb condition.

**Two Driving Cycle Detection Method**
To prevent false indications, the "two driving cycle detection method" is used for some self-diagnostic functions. When an abnormality occurs, the ECM stores it in its memory. When the same abnormality recurs after the ignition switch is turned OFF and ON (II) again, the ECM turns on the MIL.

## ECM Data

You can retrieve data from the ECM by connecting the OBD II scan tool or the Honda PGM Tester to the Data Link Connector (DLC). The items listed in the table below conform to SAE recommended practice. The Honda PGM Tester also reads data beyond that recommended by SAE to help you find the causes of intermittent problems.

NOTE:
The "operating values" listed are approximate and may vary depending on the environment and the individual vehicle. Unless noted otherwise, "at idle speed" means idling with the engine completely warmed up, in neutral position, and the A/C and all accessories turned off.

| Data | Description | Operating Value | Freeze Data |
|---|---|---|---|
| Diagnostic Trouble Code (DTC) | If the ECM detects a problem, it will store it as a code consisting of one letter and four numbers. Depending on the problem, an SAE-defined code (P0xxx) or a Honda-defined code (P1xxx) will be output to the tester. | If no problem is detected, there is no output. | YES |
| Engine Speed | The ECM computes engine speed from the signals sent from the Crankshaft Position (CKP) sensor. This data is used for determining the time and amount of injected fuel. | Nearly the same as tachometer indication<br>At idle speed: 800±50 rpm | YES |
| Vehicle Speed | The ECM converts pulse signals from the Vehicle Speed Sensor (VSS) into speed data. | Nearly the same as speedometer indication | YES |
| Manifold Absolute Pressure (MAP) | The absolute pressure caused in the intake manifold by engine load and speed. | With engine stopped: Nearly the same as atmospheric pressure<br>At idle speed: 28−48 kPa (210−360 mmHg, 8.3−14.2 inHg) | YES |
| Engine Coolant Temperature (ECT) | The ECT sensor converts coolant temperature into voltage, and sends a voltage signal to the ECM. The sensor is a thermistor whose internal resistance changes with coolant temperature. The ECM uses the voltage signals from the ECT sensor to determine the amount of injected fuel. | With cold engine: Same as ambient temperature and IAT<br>With engine warmed up: approx. 176−212°F (80−100°C) | YES |
| Primary Heated Oxygen Sensor (Primary HO2S) (Sensor 1), Secondary Heated Oxygen Sensor (Secondary HO2S) (Sensor 2) | The HO2S detects the oxygen content in the exhaust gas and sends voltage signals to the ECM. Based on these signals, the ECM controls the air/fuel ratio. When the oxygen content is high (that is, when the ratio is leaner than the stoichiometric ratio), the voltage signal is lower. When the oxygen content is low (that is, when the ratio is richer than the stoichiometric ratio), the voltage signal is higher. | 0.0−1.25 V<br>At idle speed: about 0.1−0.9 V | NO |

(cont'd)

## System Descriptions (cont'd)

### ECM Data (cont'd)

| Data | Description | Operating Value | Freeze Data |
|---|---|---|---|
| Fuel System Status | Fuel system status is indicated as "open" or "closed". Closed: Based on the HO2S output, the ECM determines the air/fuel ratio and controls the amount of injected fuel. Open: Ignoring HO2S output, the ECM refers to signals from the throttle position (TP), manifold absolute pressure (MAP), intake air temperature (IAT), barometric pressure (BARO) and engine coolant temperature (ECT) sensors to control the amount of injected fuel. | At idle speed: closed | YES |
| Short Term Fuel Trim | The air fuel ratio correction coefficient for correcting the amount of injected fuel when the Fuel System Status is "closed". When the ratio is leaner than the stoichiometric ratio, the ECM increase short term fuel trim gradually, and the amount of injected fuel increases. The air fuel ratio gradually gets richer, causing a lower oxygen content in the exhaust gas. Consequently, the short term fuel trim is lowered, and the ECM reduces the amount of injected fuel. This cycle keeps the air/fuel ratio close to the stoichiometric ratio when in closed loop status. | 0.73 – 1.47 | YES |
| Long Term Fuel Trim | Long term fuel trim is computed from short term fuel trim and indicates changes occuring in the fuel supply system over a long period. If long term fuel trim is higher than 1.00, the amount of injected fuel must be increased. If it is lower than 1.00, the amount of injected fuel must be reduced. | 0.80 1.20 | YES |
| Intake Air Temperature (IAT) | The IAT sensor converts intake air temperature into voltage and signals the ECM. When intake air temperature is low, the internal resistance of the sensor increases, and the voltage signal is higher. | With cold engine: Same as ambient temperature and ECT | YES |
| Throttle Position | Based on the accelerator pedal position, the opening angle of the throttle valve is indicated. | At idle speed: about 6% | YES |
| Ignition Timing | Ignition timing is the ignition advance angle set by the ECM. The ECM matches ignition timing to the driving conditions. | At idle speed: 5° ±5° BTDC with the SCS service signal line jumped with the Honda PGM tester | NO |
| Calculated Load Value (CLV) | CLV is the engine load calculated from the MAP data. | At idle speed: 22 – 42% At 2,500 rpm with no load: 27 48% | YES |

## ECM Electrical Connections

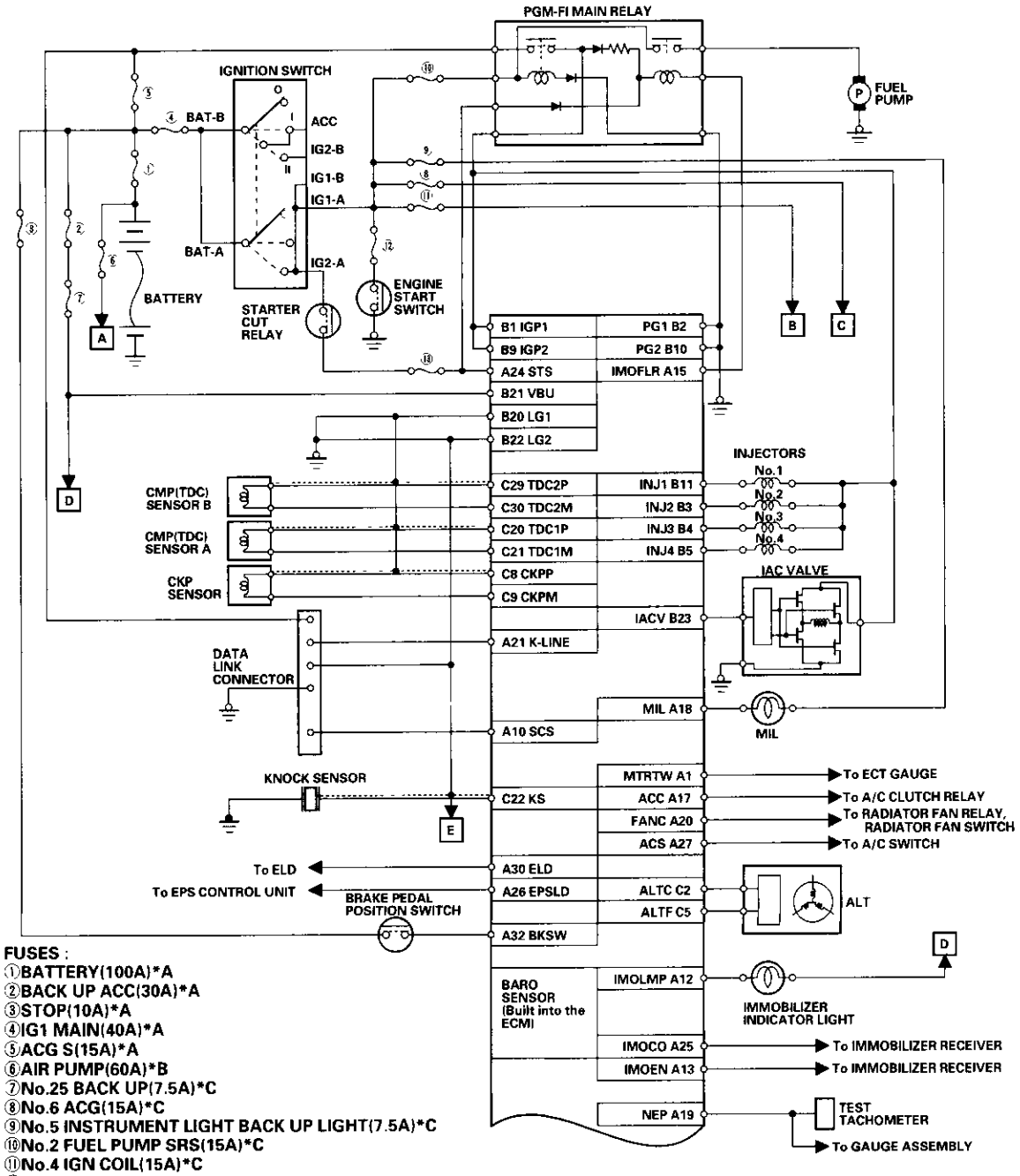


**FUSES :**
**①BATTERY(100A)*A**
**②BACK UP ACC(30A)*A**
**③STOP(10A)*A**
**④IG1 MAIN(40A)*A**
**⑤ACG S(15A)*A**
**⑥AIR PUMP(60A)*B**
**⑦No.25 BACK UP(7.5A)*C**
**⑧No.6 ACG(15A)*C**
**⑨No.5 INSTRUMENT LIGHT BACK UP LIGHT(7.5A)*C**
**⑩No.2 FUEL PUMP SRS(15A)*C**
**⑪No.4 IGN COIL(15A)*C**
**⑫No.3 ENGINE START(7.5A)*C**
**⑬No.21 STARTER SIGNAL(7.5A)*C**
***A:in the main under-hood fuse/relay box**
***B:in the auxiliary under-hood fuse box**
***C:in the under-dash fuse/relay box**

(cont'd)

## System Descriptions (cont'd)

### ECM Electrical Connections (cont'd)

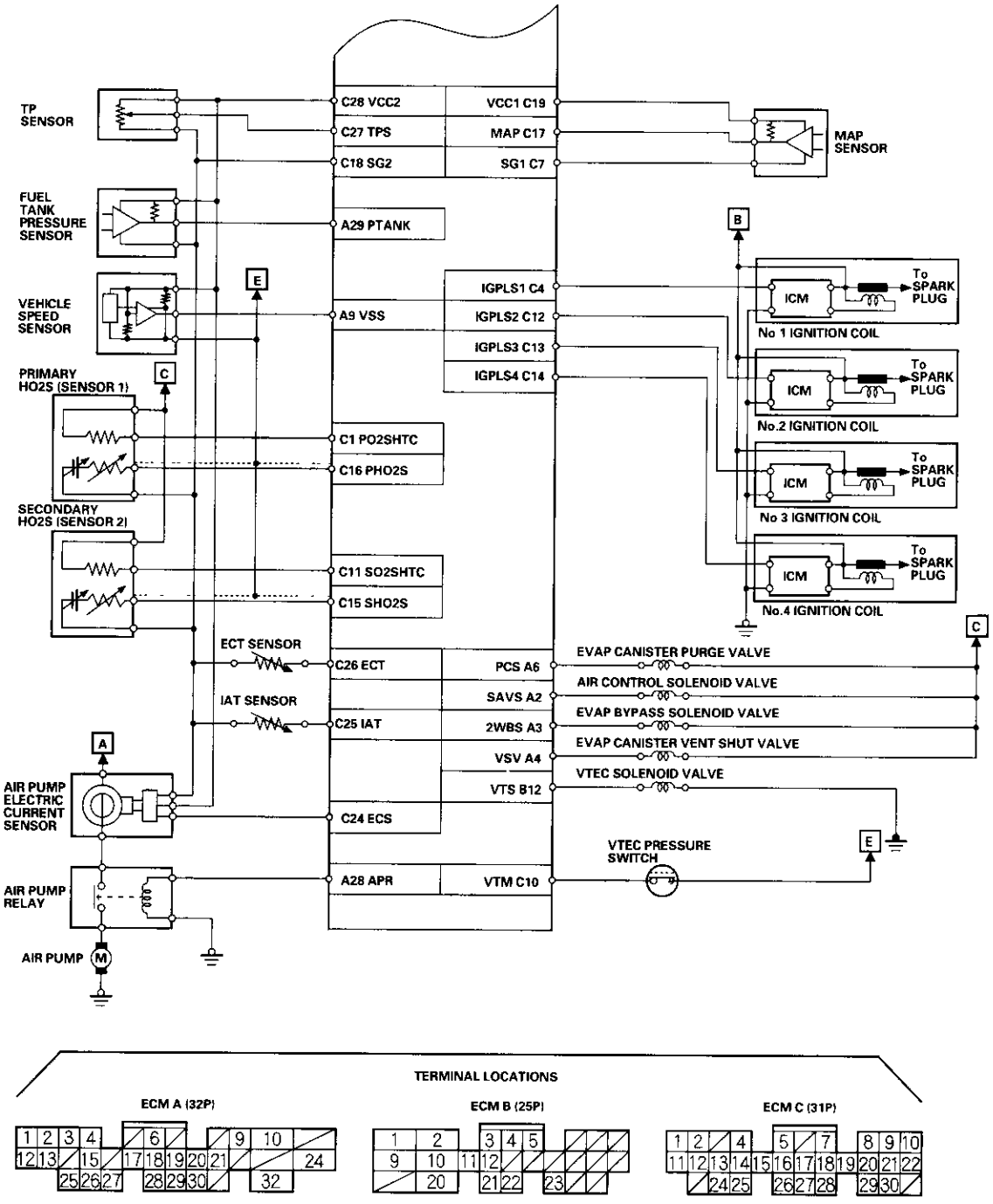

## ECM Inputs and Outputs at Connector A (32P)

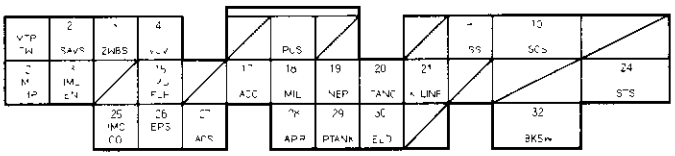


Wire side of female terminals

NOTE: Standard battery voltage is 12 V.

| Terminal number | Wire color | Terminal name | Description | Signal |
|---|---|---|---|---|
| 1 | YEL/GRN | MTRTW | Sends ECT signal to ECT gauge. | With ignition switch ON (II): duty controlled |
| 2 | RED | SAVS (AIR CONTROL VALVE VACUUM CONTROL SOLENOID VALVE) | Drives air control valve vacuum control solenoid valve. | With ignition switch ON (II): battery voltage<br>With air pump working: about 0 V |
| 3 | ORN | 2WBS (EVAP BYPASS SOLENOID VALVE) | Drives EVAP bypass solenoid valve. | With ignition switch ON (II): battery voltage |
| 4 | LT GRN/ WHT | VSV (EVAP CANISTER VENT SHUT VALVE) | Drives EVAP canister vent shut valve. | With ignition switch ON (II): battery voltage |
| 6 | RED/YEL | PCS (EVAP CANISTER PURGE VALVE) | Drives EVAP canister purge valve. | With engine running, engine coolant, below 149°F (65°C): battery voltage<br>With engine running, engine coolant, above 149°F (65°C): duty controlled |
| 9 | BLU/WHT | VSS (VEHICLE SPEED SENSOR (VSS) INPUT SIGNAL) | Sends vehicle speed sensor (VSS) signal. | Depending on vehicle speed: pulses |
| 10 | BRN | SCS (SERVICE CHECK SIGNAL) | Detects service check connector signal (the signal causing a DTC indication) | With the service check signal shorted with the PGM Tester: about 0 V<br>With the service check signal opened: about 5 V or battery voltage |
| 12 | PNK | IMOLMP (IMMOBILIZER INDICATOR LIGHT) | Drives immobilizer indicator light. | With immobilizer indicator light turned ON: about 0 V<br>With immobilizer indicator light turned OFF: battery voltage |
| 13 | PNK/BLU | IMOEN (IMMOBILIZER ENABLE SIGNAL) | Sends immobilizer enable signal. | |
| 15 | GRN/YEL | IMOFLR (IMMOBILIZER FUEL PUMP RELAY) | Drives fuel pump relay. | 0 V for 2 seconds after turning ignition switch ON (II), then battery voltage |
| 17 | RED | ACC (A/C CLUTCH RELAY) | Drives A/C clutch relay. | With compressor ON: about 0 V<br>With compressor OFF: battery voltage |
| 18 | GRN/ORN | MIL (MALFUNCTION INDICATOR LAMP) | Drives MIL. | With MIL turned ON: about 0 V<br>With MIL turned OFF: battery voltage |
| 19 | BLU | NEP (ENGINE SPEED PULSE) | Outputs engine speed pulse. | With engine running: pulses |
| 20 | GRN | FANC (RADIATOR FAN CONTROL) | Drives radiator fan relay. | With radiator fan running: about 0 V<br>With radiator fan stopped: battery voltage |

(cont'd)

## System Descriptions (cont'd)

### ECM Inputs and Outputs at Connector A (32P)

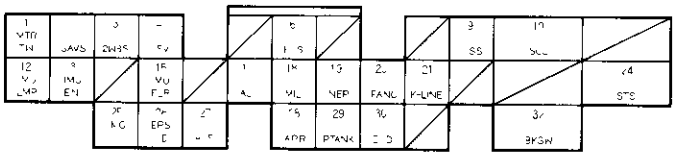


Wire side of female terminals

NOTE: Standard battery voltage is 12 V.

| Terminal number | Wire color | Terminal name | Description | Signal |
|---|---|---|---|---|
| 21 | GRY | K-LINE | Sends and receives scan tool signal. | With ignition switch ON (II): battery voltage |
| 24 | BLU/ORN | STS (STARTER SWITCH SIGNAL) | Detects starter switch signal. | With starter switch ON (III): battery voltage<br>With starter switch OFF: about 0 V |
| 25 | RED/BLU | IMOCO (IMMOBILIZER CODE) | Detects immobilizer signal. | |
| 26 | BLU/BLK | EPSLD (ELECTRICAL P/S LOAD DETECT) | Detects P/S load signal | With steering wheel at full lock: battery voltage momentarily<br>With steering wheel stationary: about 0 V |
| 27 | BLU/RED | ACS (A/C SWITCH SIGNAL) | Detects A/C switch signal. | With A/C switch ON: about 0 V<br>With A/C switch OFF: about 5 V |
| 28 | BLU | APR (AIR PUMP RELAY) | Drives air pump relay. | With ignition switch ON (II): about 0 V<br>With air pump working: battery voltage |
| 29 | LT GRN | PTANK (FUEL TANK PRESSURE (FTP) SENSOR) | Detects fuel tank pressure (FTP) sensor signal. | With ignition switch ON (II) and fuel fill cap: opened: about 2.5 V |
| 30 | GRN/RED | ELD | Detects ELD signal. | With parking lights turned on at idle: about 2.5 – 3.5 V<br>With high beam headlights turned on at idle: about 1.5 – 2.5 V |
| 32 | WHT/BLK | BKSW (BRAKE PEDAL POSITION SWITCH) | Detects brake pedal position switch signal. | With brake pedal released: about 0 V<br>With brake pedal pressed: battery voltage |

## ECM Inputs and Outputs at Connector B (25P)

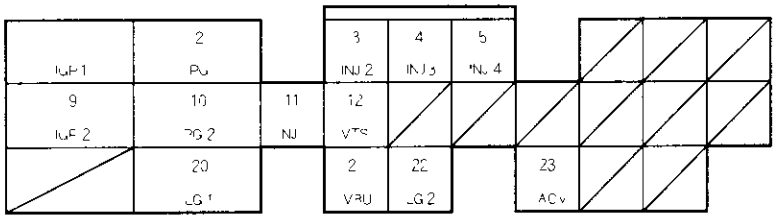


Wire side of female terminals

NOTE: Standard battery voltage is 12 V.

| Terminal number | Wire color | Terminal name | Description | Signal |
|---|---|---|---|---|
| 1 | YEL/BLK | IGP1 (POWER SOURCE) | Power source for ECM control circuit. | With ignition switch ON (II): battery voltage<br>With ignition switch OFF: about 0 V |
| 2 | BLK | PG1 (POWER GROUND) | Ground for ECM control circuit. | Less than 1.0 V at all times |
| 3 | RED | INJ2 (No. 2 INJECTOR) | Drives No. 2 injector. | With ignition switch ON (II): battery voltage<br>With engine running: duty controlled |
| 4 | BLU | INJ3 (No. 3 INJECTOR) | Drives No. 3 injector. | |
| 5 | YEL | INJ4 (No. 4 INJECTOR) | Drives No. 4 injector. | |
| 9 | YEL/BLK | IGP2 (POWER SOURCE) | Power source for ECM control circuit. | With ignition switch ON (II): battery voltage<br>With ignition switch OFF: about 0 V |
| 10 | BLK | PG2 (POWER GROUND) | Ground for ECM control circuit. | Less than 1.0 V at all times |
| 11 | BRN | INJ1 (No.1 INJECTOR) | Drives No.1 injector. | With ignition switch ON (II): battery voltage<br>With engine running: duty controlled |
| 12 | GRN/YEL | VTS (VTEC SOLENOID VALVE) | Drives VTEC solenoid valve. | With engine at low rpm: about 0 V<br>With engine at high rpm: battery voltage |
| 20 | BRN/YEL | LG1 (LOGIC GROUND) | Ground for ECM control circuit. | Less than 1.0 V at all times |
| 21 | WHT/RED | VBU (VOLTAGE BACK UP) | Power source for ECM control circuit.<br>Power source for DTC memory. | Battery voltage at all times |
| 22 | BRN/YEL | LG2 (LOGIC GROUND) | Ground for ECM control circuit. | Less than 1.0 V at all times |
| 23 | BLK/RED | IACV (IDLE AIR CONTROL VALVE) | Drives IAC valve. | With engine running: duty controlled |

(cont'd)

## System Descriptions (cont'd)

### ECM Inputs and Outputs at Connector C (31P)

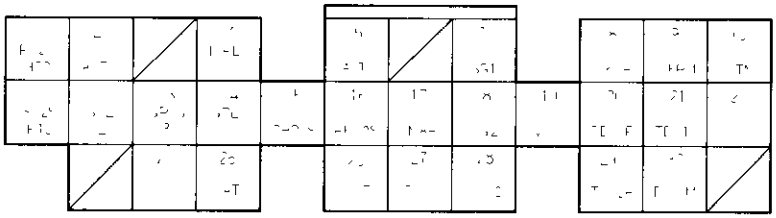

Wire side of female terminals

NOTE: Standard battery voltage is 12 V.

| Terminal number | Wire color | Terminal name | Description | Signal |
|---|---|---|---|---|
| 1 | BLK/WHT | PO2SHTC (PRIMARY HEATED OXYGEN SENSOR HEATER CONTROL) | Drives primary heated oxygen sensor heater. | With ignition switch ON (II): battery voltage<br>With fully warmed up engine running: duty controlled |
| 2 | WHT/GRN | ALTC (ALTERNATOR CONTROL) | Sends alternator control signal. | With fully warmed up engine running: about 8 V<br>With engine running at low electrical load: about 0 V |
| 4 | WHT | IGPLS1 (No. 1 IGNITION COIL PULSE) | Drives No. 1 ignition coil. | With ignition switch ON (II): 0 V<br>With engine running: pulses |
| 5 | WHT/RED | ALTF (ALTERNATOR FR SIGNAL) | Detects alternator FR signal. | With fully warmed up engine running: 0 V-battery voltage (depending on electrical load) |
| 7 | GRN/WHT | SG1 (SENSOR GROUND) | Ground for MAP sensor. | Less than 1.0 V at all times |
| 8 | BLU | CKPP (CKP SENSOR P SIDE) | Detects CKP sensor. | With engine running: pulses |
| 9 | WHT | CKPM (CKP SENSOR M SIDE) | Ground for CKP sensor. | |
| 10 | BLU/BLK | VTM (VTEC OIL PRESSURE SWITCH SIGNAL) | Detects VTEC oil pressure switch signal. | With engine at low engine speed: about 0 V<br>With engine at high engine speed (vehicle running): battery voltage |
| 11 | BLK/WHT | SO2SHTC (SECONDARY HEATED OXYGEN SENSOR HEATER CONTROL) | Drives secondary heated oxygen sensor heater. | With ignition switch ON (II): battery voltage<br>With fully warmed up engine running: duty controlled |
| 12 | WHT/GRN | IGPLS2 (No. 2 IGNITION COIL PULSE) | Drives No. 2 ignition coil. | With ignition switch ON (II): 0 V<br>With engine running: pulses |
| 13 | WHT/BLK | IGPLS3 (No. 3 IGNITION COIL PULSE) | Drives No. 3 ignition coil. | |
| 14 | WHT/BLU | IGPLS4 (No. 4 IGNITION COIL PULSE) | Drives No. 4 ignition coil. | |
| 15 | WHT/RED | SHO2S (SECONDARY HEATED OXYGEN SENSOR, SENSOR 2) | Detects secondary heated oxygen sensor (sensor 2) signal. | With throttle fully opened from idle with fully, warmed up engine: above 0.6 V<br>With throttle quickly closed: below 0.4 V |
| 16 | WHT | PHO2S (PRIMARY HEATED OXYGEN SENSOR, SENSOR 1) | Detects primary heated oxygen sensor (sensor 1) signal. | With throttle fully opened from idle with fully, warmed up engine: above 0.6 V<br>With throttle quickly closed: below 0.4 V |
| 17 | GRN/RED | MAP (MANIFOLD ABSOLUTE PRESSURE SENSOR) | Detects MAP sensor signal. | With ignition switch ON (II): about 3 V<br>At idle: about 1.0 V (depending on engine speed) |
| 18 | GRN/YEL | SG2 (SENSOR GROUND) | Sensor ground. | Less than 1.0 V at all times. |
| 19 | YEL/RED | VCC1 (SENSOR VOLTAGE) | Power source to MAP sensor. | With ignition switch ON (II): about 5 V<br>With ignition switch OFF: about 0 V |

NOTE: Standard battery voltage is 12 V.

| Terminal number | Wire color | Terminal name | Description | Signal |
|---|---|---|---|---|
| 20 | GRN | TDC1P (CAMSHAFT POSITION (CMP) SENSOR (TOP DEAD CENTER (TDC) SENSOR) A P SIDE) | Detects CMP (TDC) sensor A. | With engine running: pulses |
| 21 | RED | TDC1M (CAMSHAFT POSITION (CMP) SENSOR (TOP DEAD CENTER (TDC) SENSOR) A M SIDE) | Ground for CMP (TDC) sensor A. | |
| 22 | RED/BLU | KS (KNOCK SENSOR) | Detects knock sensor signal. | With engine knocking: pulses |
| 24 | WHT/BLK | ECS (AIR PUMP ELECTRIC CURRENT SENSOR) | Detects air pump electric current sensor signal. | With ignition switch ON (II): 0.5 V<br>With air pump working: about 2 – 5 V |
| 25 | RED/YEL | IAT (INTAKE AIR TEMPERATURE SENSOR) | Detects IAT sensor signal. | With ignition switch ON (II): about 0.1 – 4.8 V (depending on intake air temperature) |
| 26 | RED/WHT | ECT (ENGINE COOLANT TEMPERATURE SENSOR) | Detects ECT sensor signal. | With ignition switch ON (II): about 0.1 – 4.8 V (depending on engine coolant temperature) |
| 27 | RED/BLK | TPS (THROTTLE POSITION SENSOR) | Detects TP sensor signal. | With throttle fully open: about 4.8 V<br>With throttle fully closed: about 0.3 V |
| 28 | YEL/BLU | VCC2 (SENSOR VOLTAGE) | Provides sensor voltage. | With ignition switch ON (II): about 5 V<br>With ignition switch OFF: about 0 V |
| 29 | YEL | TDC2P (CAMSHAFT POSITION (CMP) SENSOR (TOP DEAD CENTER (TDC) SENSOR) B P SIDE) | Detects CMP (TDC) sensor B. | With engine running: pulses |
| 30 | BLK | TDC2M (CAMSHAFT POSITION (CMP) SENSOR (TOP DEAD CENTER (TDC) SENSOR) B M SIDE) | Ground for CMP (TDC) sensor B. | |

(cont'd)

## System Descriptions (cont'd)

### Vacuum Hose Routing

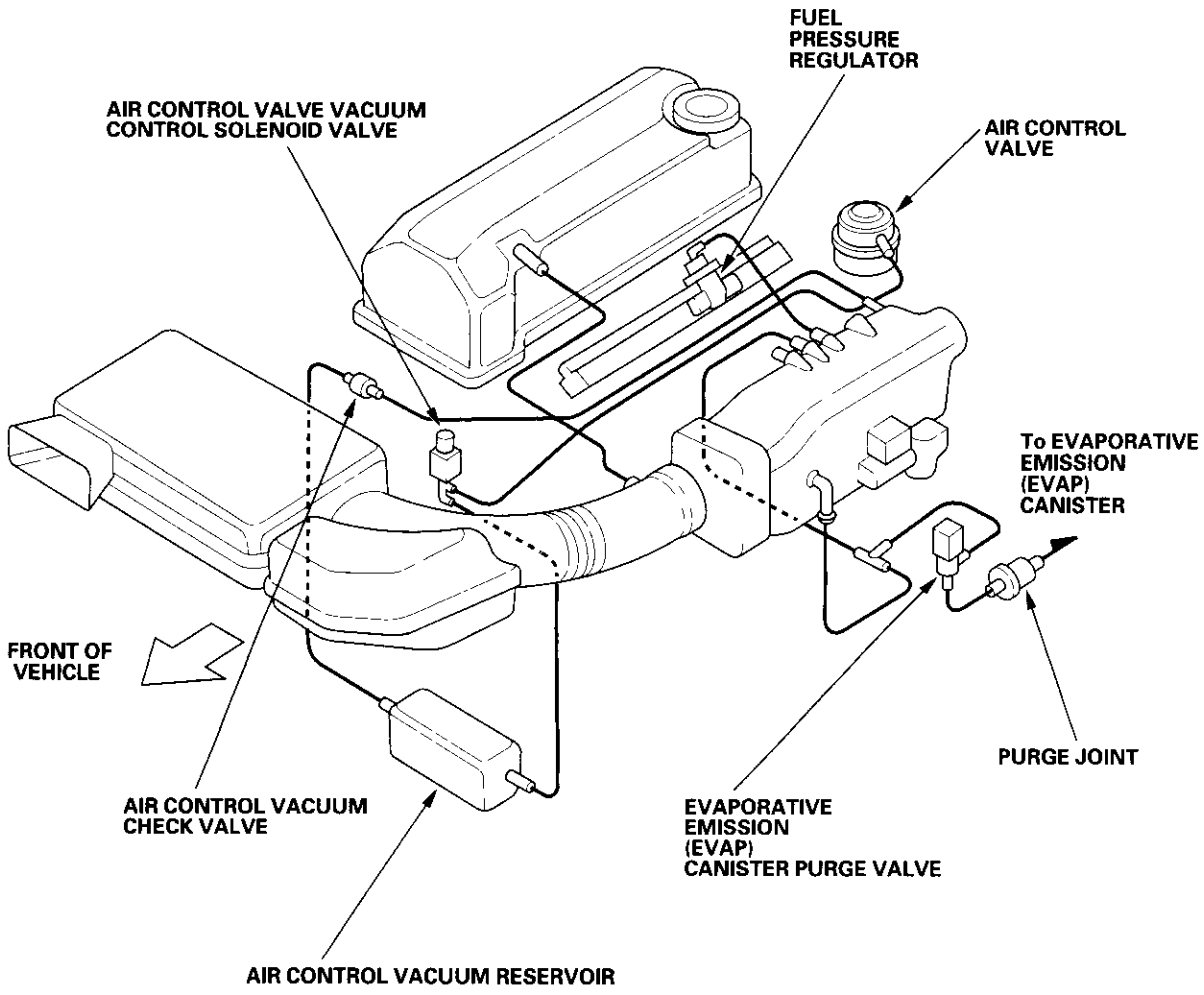

## Vacuum Distribution

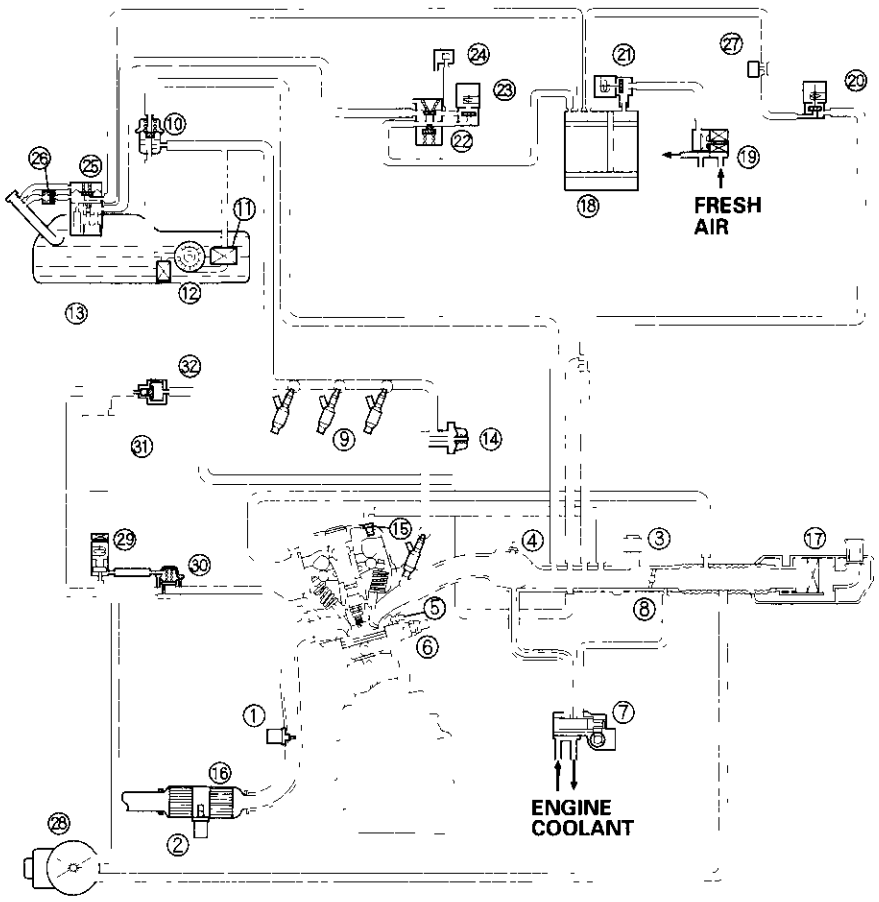


1. PRIMARY HEATED OXYGEN SENSOR (PRIMARY HO2S) (SENSOR 1)
2. SECONDARY HEATED OXYGEN SENSOR (SECONDARY HO2S) (SENSOR 2)
3. MANIFOLD ABSOLUTE PRESSURE (MAP) SENSOR
4. INTAKE AIR TEMPERATURE (IAT) SENSOR
5. ENGINE COOLANT TEMPERATURE (ECT) SENSOR
6. KNOCK SENSOR
7. IDLE AIR CONTROL (IAC) VALVE
8. THROTTLE BODY
9. INJECTOR
10. FUEL PRESSURE REGULATOR
11. FUEL FILTER
12. FUEL PUMP
13. FUEL TANK
14. FUEL PULSATION DAMPER
15. POSITIVE CRANKCASE VENTILATION (PCV) VALVE
16. THREE WAY CATALYTIC CONVERTER
17. AIR CLEANER
18. EVAPORATIVE EMISSION (EVAP) CANISTER
19. EVAPORATIVE EMISSION (EVAP) CANISTER FILTER
20. EVAPORATIVE EMISSION (EVAP) CANISTER PURGE VALVE
21. EVAPORATIVE EMISSION (EVAP) CANISTER VENT SHUT VALVE
22. EVAPORATIVE EMISSION (EVAP) TWO WAY VALVE
23. EVAPORATIVE EMISSION (EVAP) BYPASS SOLENOID VALVE
24. FUEL TANK PRESSURE (FTP) SENSOR
25. FUEL TANK VAPOR CONTROL VALVE
26. FUEL TANK VAPOR RECIRCULATION VALVE
27. PURGE JOINT
28. AIR PUMP
29. AIR CONTROL VALVE VACUUM CONTROL SOLENOID VALVE
30. AIR CONTROL VALVE
31. AIR CONTROL VACUUM RESERVOIR
32. AIR CONTROL VACUUM CHECK VALVE

(cont'd)

## System Descriptions (cont'd)

### PGM-FI System

The Programmed Fuel Injection (PGM-FI) system is a sequential multiport fuel injection system.

**Alternator Control**
The alternator signals the ECM during charging. The ECM then controls the voltage generated at the alternator according to the electrical load determined by the ELD (Electrical Load Detector) and driving mode. This reduces engine load to improve fuel economy.

**A/C Switch**
The A/C (air conditioning) switch signals the ECM whenever there is a demand for cooling.

**A/C Compressor Clutch Relay**
When the ECM receives a demand for cooling from the A/C system, it delays the compressor from being energized, and enriches the mixture to assure smooth transition to the A/C mode.

**Barometric Pressure (BARO) Sensor**
The BARO sensor is inside the ECM. It converts atmospheric pressure into a voltage signal that modifies the basic duration of the fuel injection discharge.

**Crankshaft Position (CKP) Sensor**
The CKP sensor determines timing for injection of each cylinder and also detects engine speed.
The ECM detects misfiring by using the CKP sensor to monitor fluctuations in crankshaft speed. It will then set DTCs depending on how much misfiring occurs.

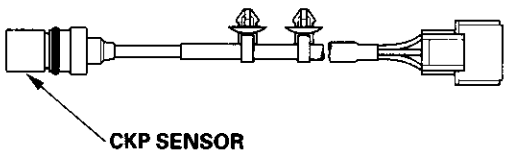


**Engine Coolant Temperature (ECT) Sensor**
The ECT sensor is a temperature dependent resistor (thermistor). The resistance of the thermistor decreases as the engine coolant temperature increases.

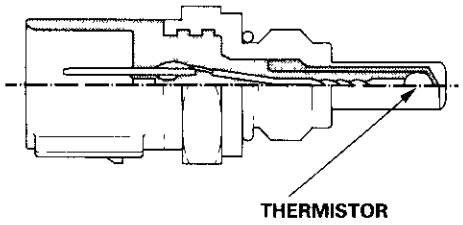


**Intake Air Temperature (IAT) Sensor**
The IAT sensor is a temperature dependent resistor (thermistor). The resistance of the thermistor decreases as the intake air temperature increases.

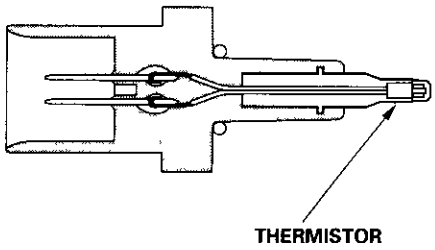

**Injector Timing and Duration**
The ECM contains the memory for basic discharge duration at various engine speeds and manifold pressures. The basic discharge duration, after being read out from the memory, is further modified by signals sent from various sensors to obtain the final discharge duration.
By monitoring long term fuel trim, the ECM detects long term malfunctions in the fuel system, and will set a DTC if the malfunction occurs during two consecutive trips.

**Ignition Timing Control**
The ECM contains the memory for basic ignition timing at various engine speeds and manifold air flow rates. It also adjusts the timing according to engine coolant temperature.

**Knock Sensor**
The knock control system adjusts the ignition timing to minimize knock.

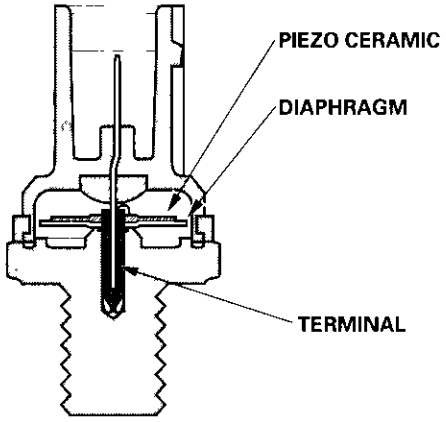


**Manifold Absolute Pressure (MAP) Sensor**
The MAP sensor converts manifold absolute pressure into electrical signals to the ECM.

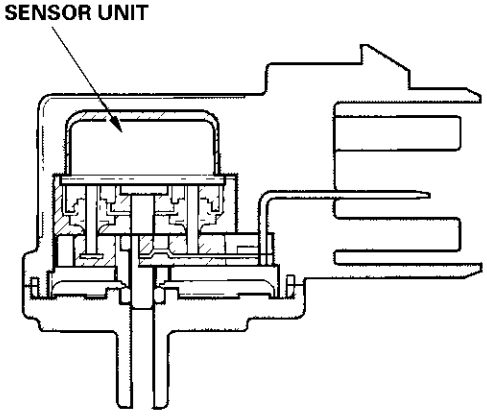


**Primary and Secondary Heated Oxygen Sensors (HO2S)**
The heated oxygen sensors detect the oxygen content in the exhaust gas, then sends a signal to the ECM which varies the duration of injection accordingly. To stabilize its output, the sensors have an internal heater. The primary sensor is installed in the exhaust pipe. The secondary sensor is installed in the TWC.

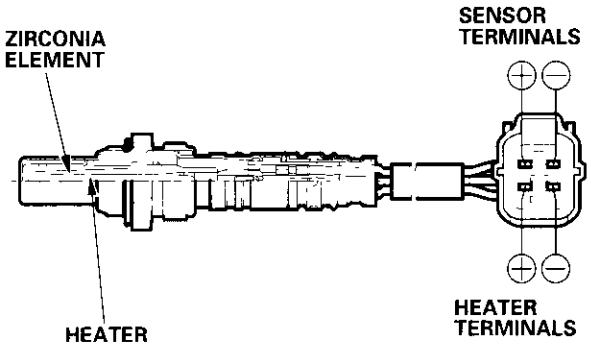


By controlling the air/fuel ratio with sensors, the deterioration of the primary sensor can be evaluated by its feedback period. When the feedback period exceeds a certain value during stable driving conditions, the sensor is considered deteriorated and the ECM sets a DTC.

**Starting Control**
When the engine is started, the ECM provides a rich mixture by increasing injector duration.

(cont'd)

## System Descriptions (cont'd)

**Throttle Position (TP) Sensor**
The TP sensor is a potentiometer connected to the throttle valve shaft. As the throttle position changes, the sensor varies the signal voltage to the ECM. The TP sensor is not replaceable apart from the throttle body.

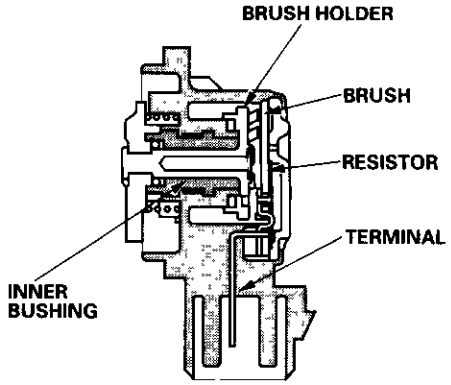


**Comshaft Position (CMP Sensor (Top Dead Center (TDC) sensors)**
The CMP A/B (TDC 1/2) sensor determines ignition timing at start up (cranking) and when crank angle is abnormal.

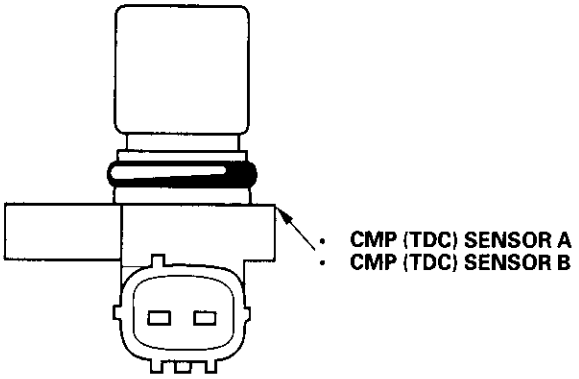


### Idle Control System

When the engine is cold, the A/C compressor is on, the transmission is in gear, the brake pedal is pressed, the P/S load is high, or the alternator is charging, the ECM controls current to the IAC valve to maintain the correct idle speed. Refer to the System Diagram to see the functional layout of the system.

**Brake Pedal Position Switch**
The brake pedal position switch signals the ECM when the brake pedal is pressed.

**Electrical Power Steering (EPS) Signal**
The EPS signals the ECM when the power steering load is high.

**Engine Start Switch**
The engine start switch signals the ECM when the engine is cranking.

**Idle Air Control (IAC) Valve**
To maintain the proper idle speed, the IAC valve changes the amount of air bypassing the throttle body in response to an electrical signal from the ECM.

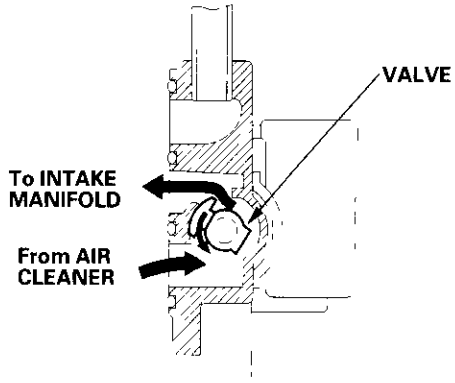

## Fuel Supply System

**Fuel Cut-off Control**
During deceleration with the throttle valve closed, current to the injectors is cut off to improve fuel economy at speeds over 1,050 rpm.
Fuel cut-off action also occurs when engine speed exceeds 9,000 rpm, regardless of the position of the throttle valve, to protect the engine from over-revving.

**Fuel Pump Control**
When the ignition is turned ON (II), the ECM grounds the PGM-FI main relay which feeds current to the fuel pump for 2 seconds to pressurize the fuel system. With the engine running, the ECM grounds the PGM-FI main relay and feeds current to the fuel pump. When the engine is not running and the ignition is ON (II), the ECM cuts ground to the PGM-FI main relay which cuts current to the fuel pump.

**PGM-FI Main Relay**
The PGM-FI relay contains two separate relays. One is energized whenever the ignition is on which supplies battery voltage to the ECM, power to the injectors, and power for the second relay. The second relay is energized to supply power to the fuel pump for 2 seconds when the ignition switch is ON (II), and when the engine is running.

## Intake Air System

Refer to the System Diagram to see the functional layout of the system.

**Throttle Body**
The throttle body is a single-barrel side draft type. The lower portion of the throttle valve is heated by engine coolant from the cylinder head.

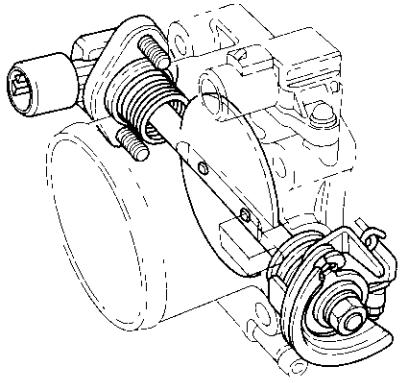

## Catalytic Converter System

**TWC (Three-Way Catalytic Converter)**
The TWC converts hydrocarbons (HC), carbon monoxide (CO), and oxides of nitrogen (NOx) in the exhaust gas to carbon dioxide (CO2), nitrogen (N2), and water vapor.

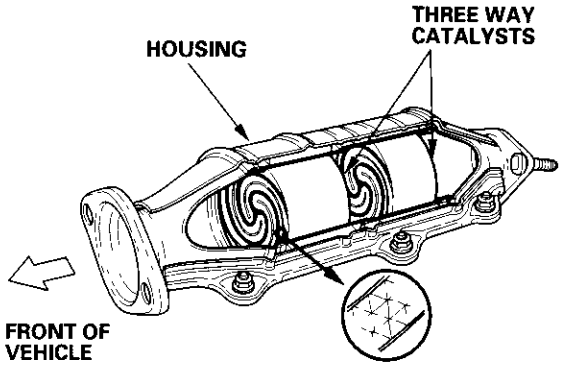


(cont'd)

## System Descriptions (cont'd)

### Positive Crankcase Ventilation (PCV) System

The PCV valve prevents blow-by gases from escaping into the atmosphere by venting them into the intake manifold.

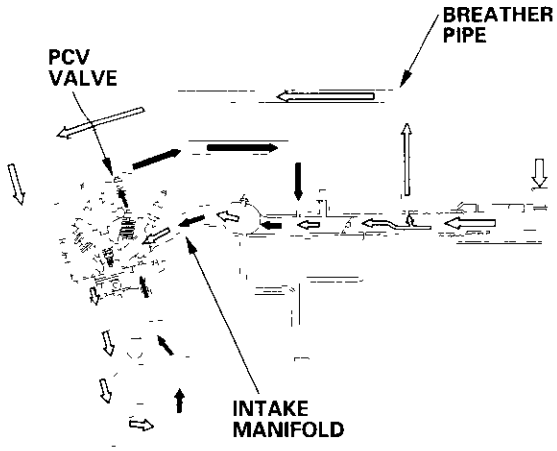


### Evaporative Emission (EVAP) Control System

Refer to the System Diagram to see the functional layout of the system.

**EVAP Canister**
The EVAP canister temporarily stores fuel vapor from the fuel tank until it can be purged back into the engine and burned (refer to the System Diagram to see the functional layout of the system).

**EVAP Canister Purge Valve**
When the engine coolant temperature is below 149°F (65°C), the ECM turns off the EVAP canister purge valve which cuts vacuum to the EVAP canister.

**Fuel Tank Pressure (FTP) Sensor**
The FTP sensor converts fuel tank absolute pressure into an electrical input to the ECM.

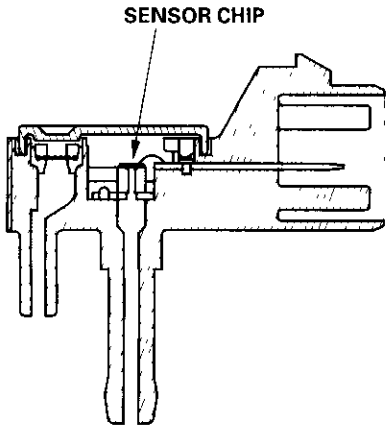

## Idle Control System

The idle speed of the engine is controlled by the Idle Air Control (IAC) valve:

- After the engine starts, the IAC valve opens for a certain amount of time. The amount of air is increased to raise the idle speed.
- When the engine coolant temperature is low, the IAC valve is opened to obtain the proper fast idle speed. The amount of bypassed air is thus controlled in relation to engine coolant temperature.

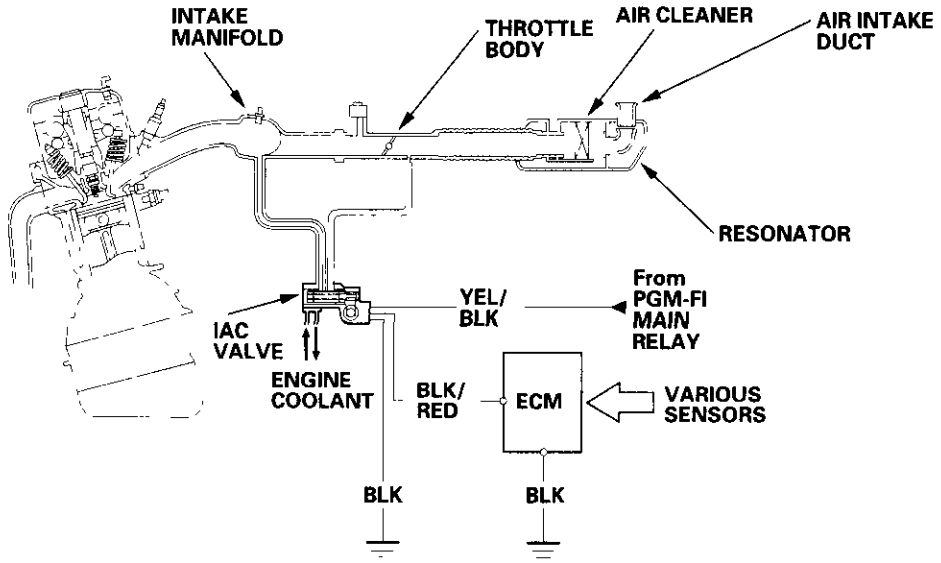


## Intake Air System

This system supplies air for engine needs. A resonator in the air intake duct provides additional silencing as air is drawn into the system.

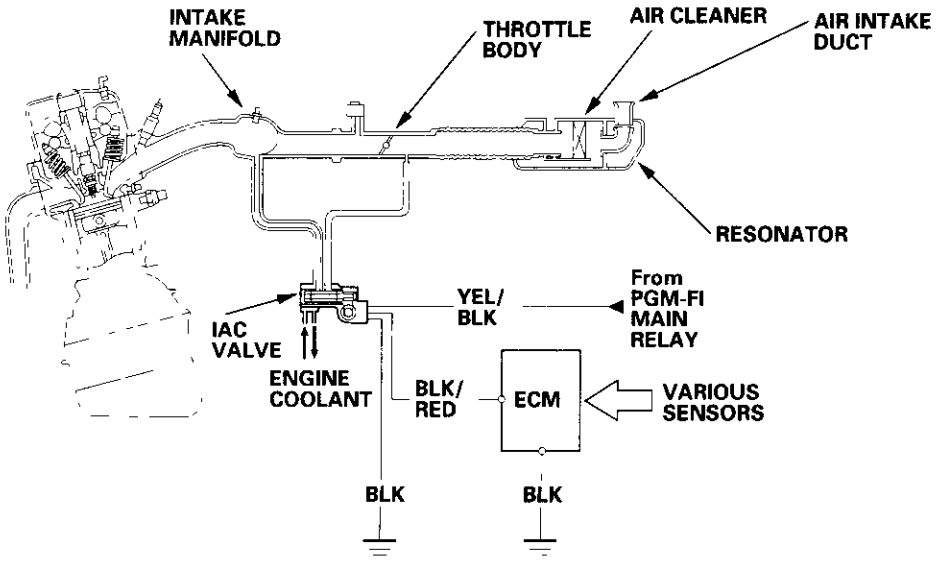


(cont'd)

## System Descriptions (cont'd)

### Pulsed Secondary Air Injection

The Pulsed Secondary Air Injection advances the activation of the catalytic converter and reduces the hydrocarbons (HC), carbon monoxide (CO), and oxides of nitrogen (NOx) in the exhaust gas.

The system operates after the engine starts under the followig conditions:
- The engine coolant temperature is between 32°F and 158°F (0°C and 70°C)
- The difference is more than 36°F (20°C) between the engine coolant temperature when the engine is started and when the engine was stopped in the previous driving cycle.

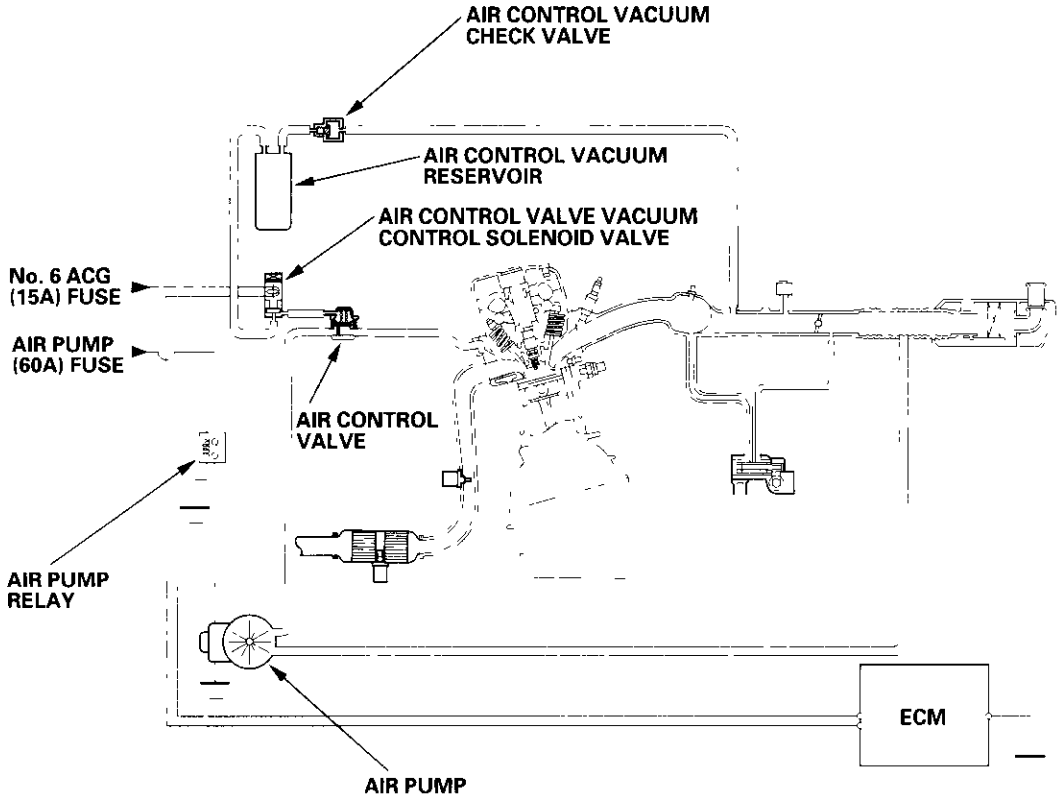


When the engine is cold and first started, the air pump pumps fresh air into the exhaust ports. The amount of air entering the exhaust is regulated by an air control valve which is controlled by the ECM. The system does not work for more than 60 seconds at a time. Actual operating time will very depending on the difference between engine coolant temperature and intake air temperature.

When fresh air reacts with any unburned exhaust gases, the exhaust gas temperatures rise. This rise in temperature promotes faster warm-up of the catalytic converter, resulting in cleaner emissions during cold start-up.

When the air induction system is not operating, the air control solenoid closes the air control valve to prevent any exhaust gases from flowing back into the sytem.

## Evaporative Emission (EVAP) Control Diagram

The EVAP controls minimize the amount of fuel vapor escaping to the atmosphere. Vapor from the fuel tank is temporarily stored in the EVAP canister until it can be purged from the canister into the engine and burned.

- The EVAP canister is purged by drawing fresh air through it and a port on the intake manifold. The purging vacuum is controlled by the EVAP canister purge valve, which is open whenever engine coolant temperature is above 149°F (65°C).
- When vapor pressure in the fuel tank is higher than the set value of the EVAP two way valve, the valve opens and regulates the flow of fuel vapor to the EVAP canister.
- During refueling, the fuel tank vapor control valve opens with the pressure in the fuel tank, and feeds the fuel vapor to the EVAP canister.

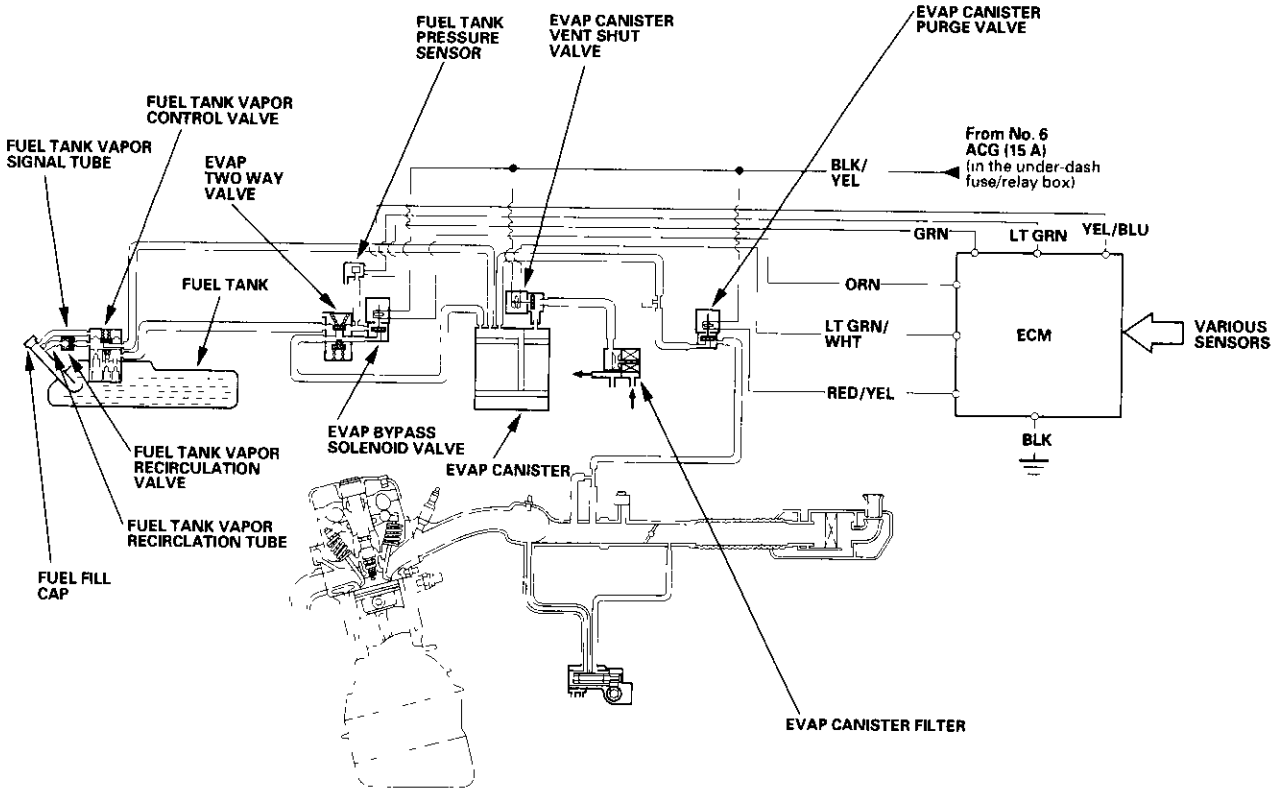


(cont'd)

## System Descriptions (cont'd)

### ECM Circuit Diagram

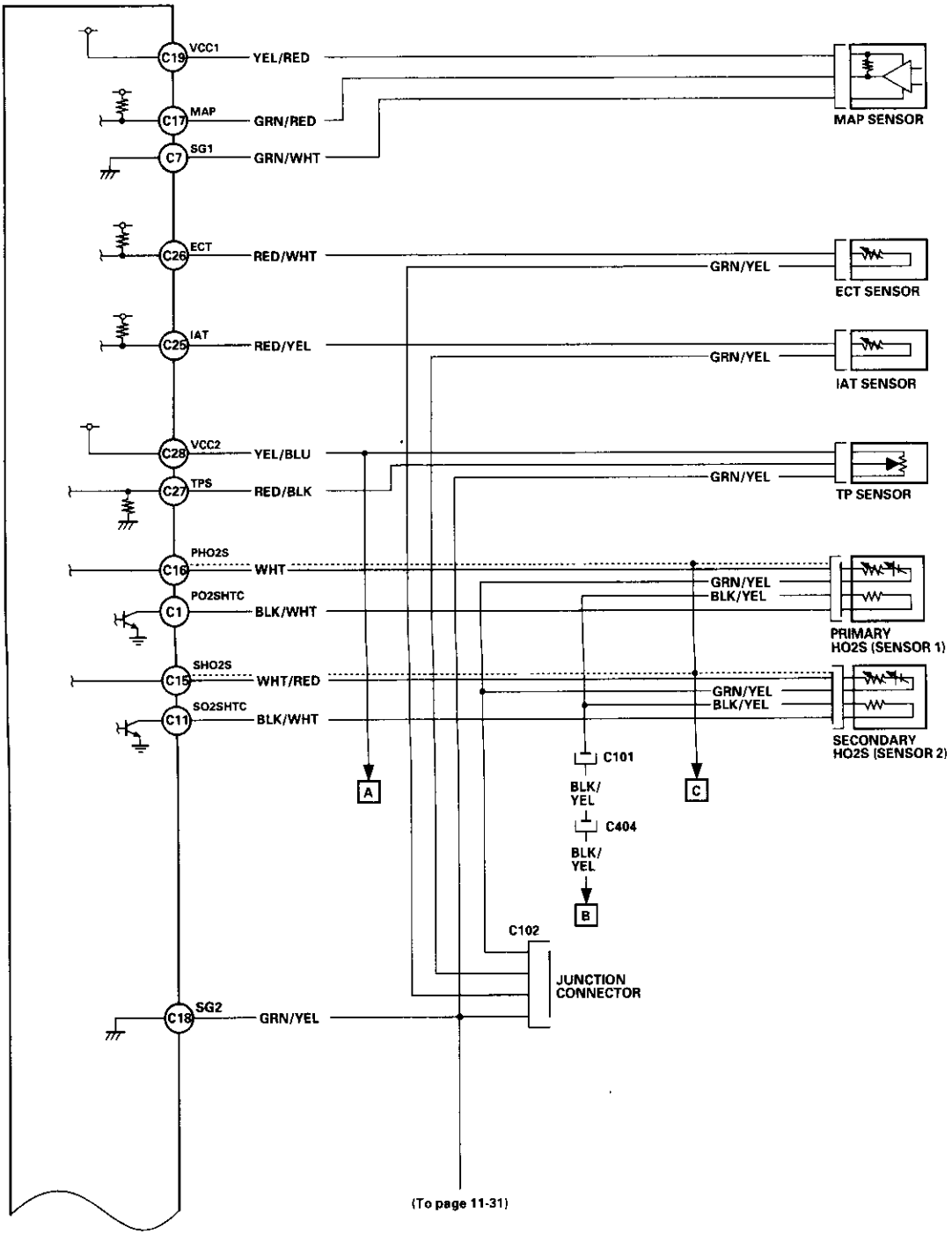

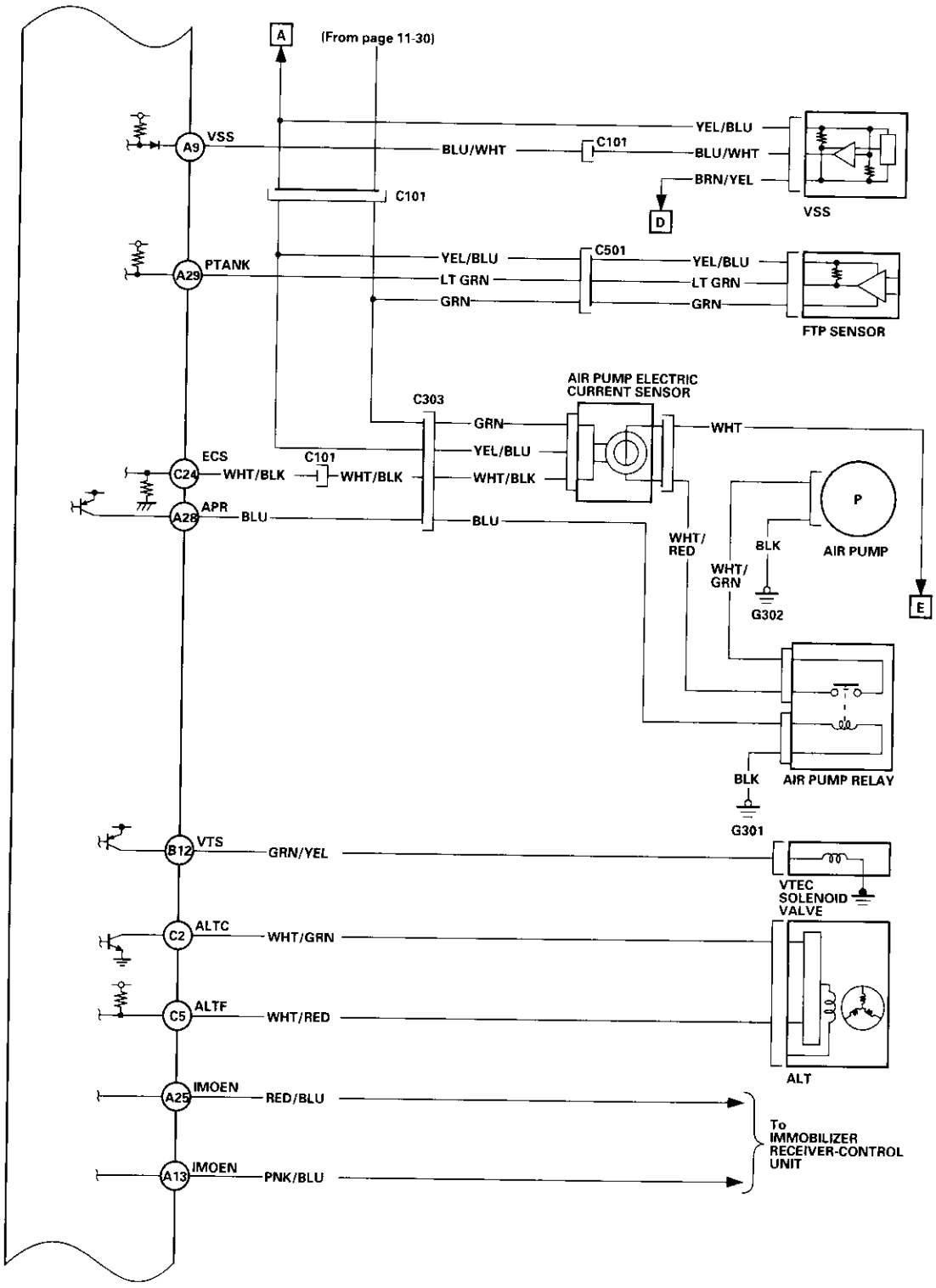
A
(From page 11-30)
A9
VSS
BLU/WHT
C101
YEL/BLU
BLU/WHT
BRN/YEL
D
VSS
C101
A29
PTANK
YEL/BLU
LT GRN
GRN
C501
YEL/BLU
LT GRN
GRN
FTP SENSOR
AIR PUMP ELECTRIC CURRENT SENSOR
C303
GRN
YEL/BLU
WHT/BLK
WHT
C24
ECS
C101
WHT/BLK
WHT/BLK
A28
APR
BLU
BLU
P
AIR PUMP
WHT/ RED
BLK
WHT/ GRN
G302
E
BLK
AIR PUMP RELAY
G301
B12
VTS
GRN/YEL
VTEC SOLENOID VALVE
C2
ALTC
WHT/GRN
C5
ALTF
WHT/RED
ALT
A25
IMOEN
RED/BLU
A13
IMOEN
PNK/BLU
To IMMOBILIZER RECEIVER-CONTROL UNIT

(cont'd)

## System Descriptions (cont'd)

### ECM Circuit Diagram (cont'd)

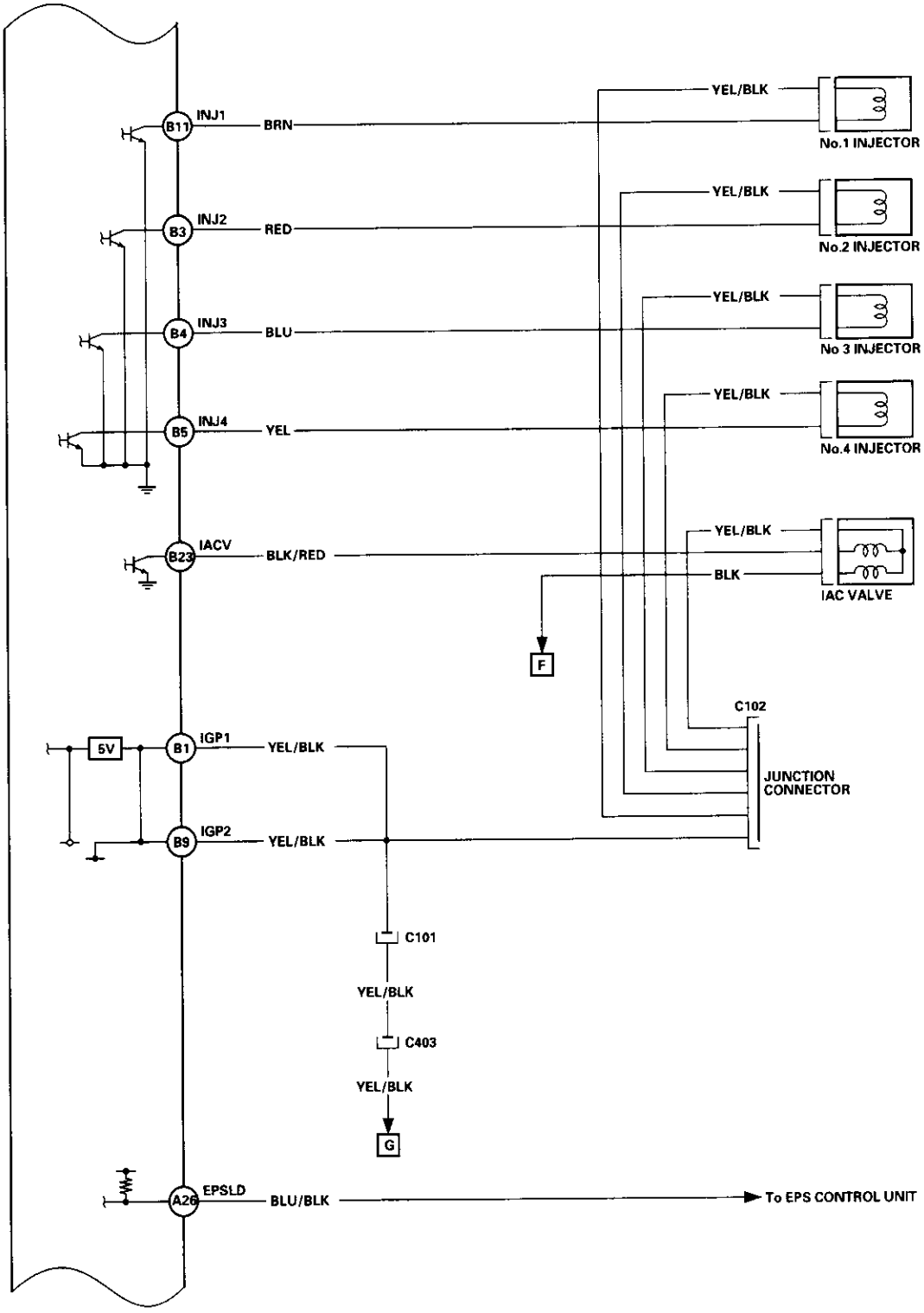

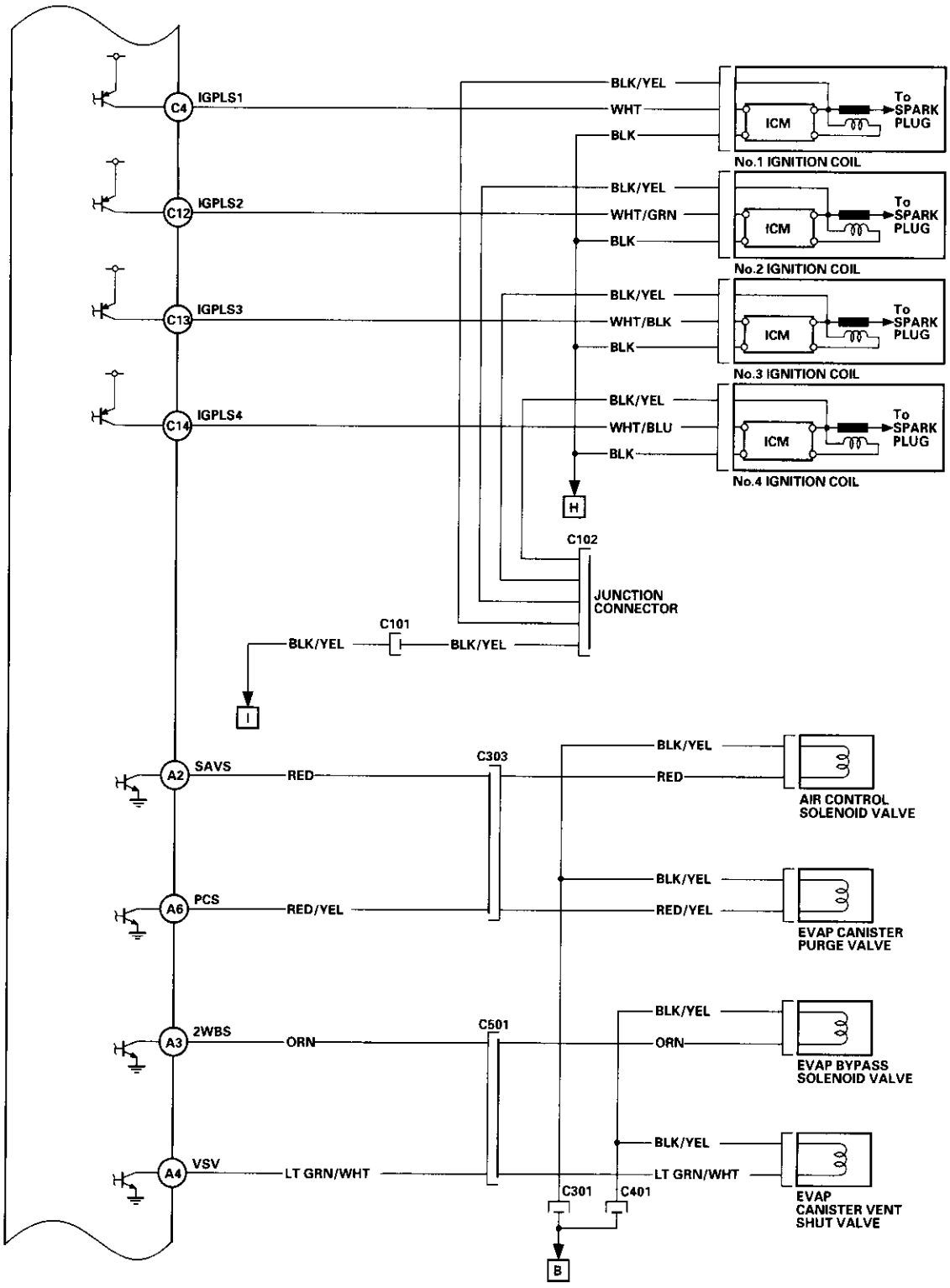
C4
IGPLS1
BLK/YEL
WHT
BLK
ICM
To SPARK PLUG
No.1 IGNITION COIL
C12
IGPLS2
BLK/YEL
WHT/GRN
BLK
ICM
To SPARK PLUG
No.2 IGNITION COIL
C13
IGPLS3
BLK/YEL
WHT/BLK
BLK
ICM
To SPARK PLUG
No.3 IGNITION COIL
C14
IGPLS4
BLK/YEL
WHT/BLU
BLK
ICM
To SPARK PLUG
No.4 IGNITION COIL
H
C102
JUNCTION CONNECTOR
C101
BLK/YEL
BLK/YEL
I
A2
SAVS
RED
C303
BLK/YEL
RED
AIR CONTROL SOLENOID VALVE
A6
PCS
RED/YEL
BLK/YEL
RED/YEL
EVAP CANISTER PURGE VALVE
A3
2WBS
ORN
C501
BLK/YEL
ORN
EVAP BYPASS SOLENOID VALVE
A4
VSV
LT GRN/WHT
BLK/YEL
LT GRN/WHT
C301
C401
EVAP CANISTER VENT SHUT VALVE
B

(cont'd)

## System Descriptions (cont'd)

### ECM Circuit Diagram (cont'd)

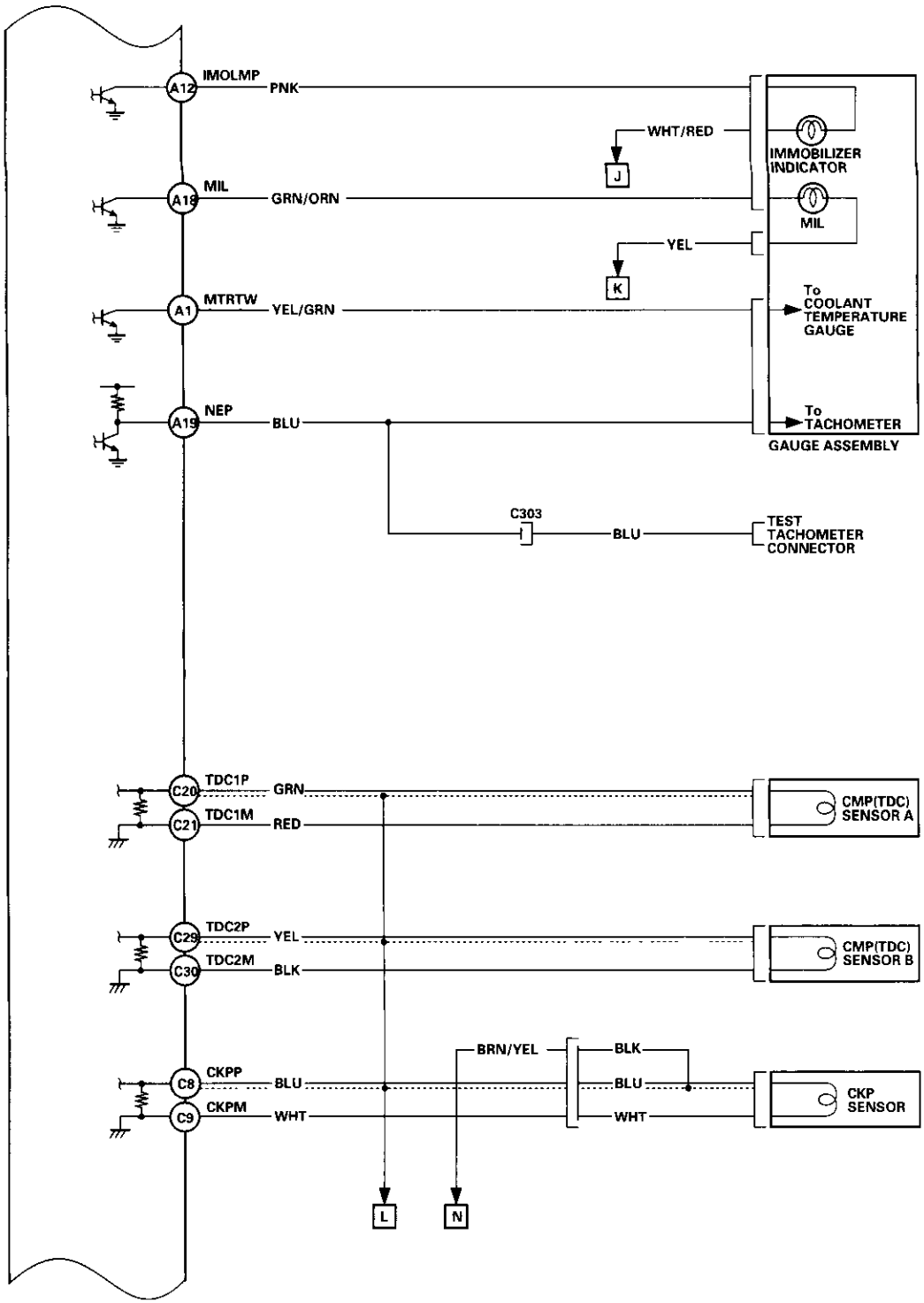

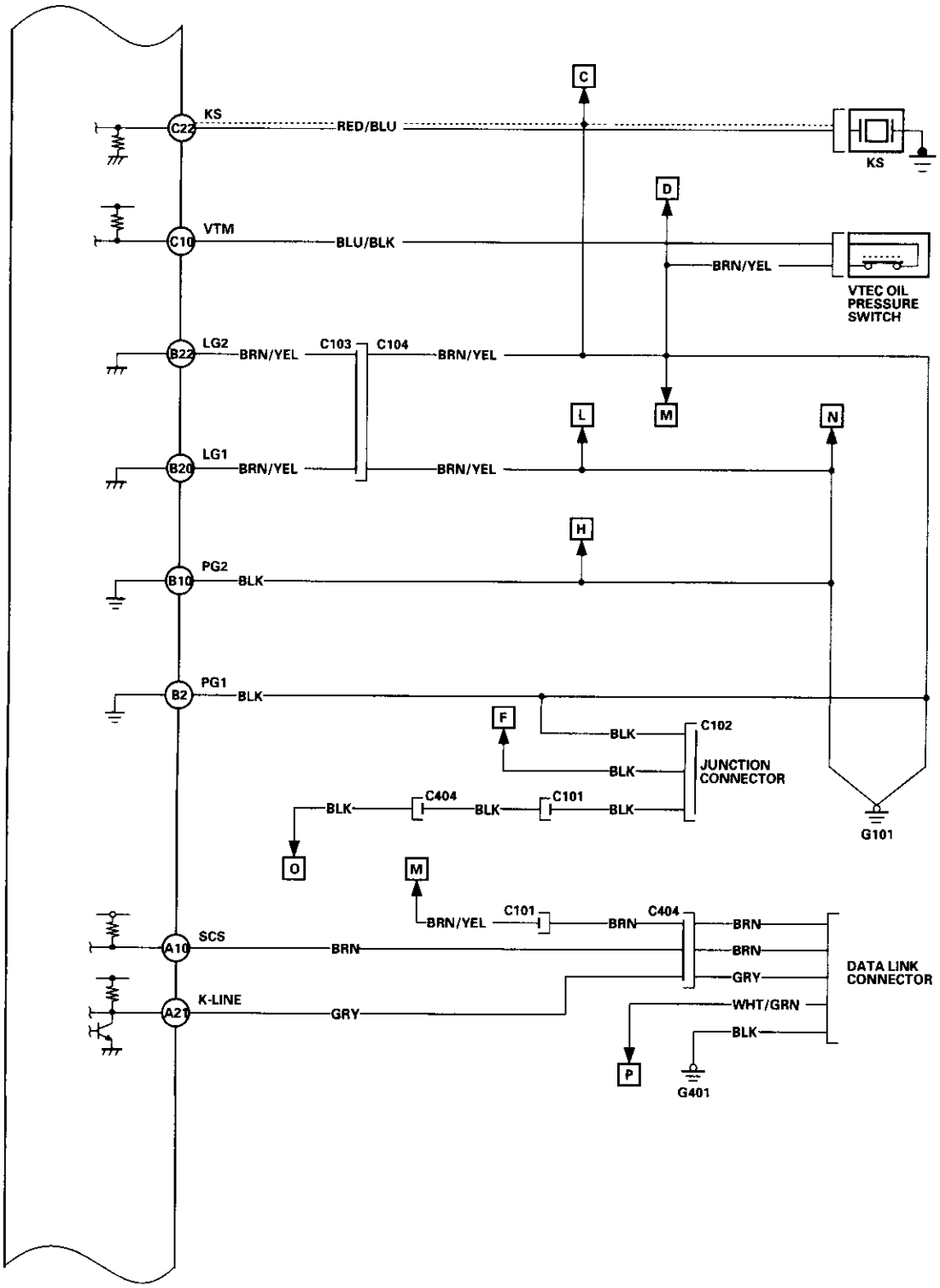
KS
C22
RED/BLU
C
KS
D
VTM
C10
BLU/BLK
BRN/YEL
VTEC OIL PRESSURE SWITCH
LG2
B22
BRN/YEL
C103
C104
BRN/YEL
L
M
N
LG1
B20
BRN/YEL
BRN/YEL
H
PG2
B10
BLK
PG1
B2
BLK
F
BLK
C102
JUNCTION CONNECTOR
BLK
C404
BLK
C101
BLK
G101
O
M
BRN/YEL
C101
C404
BRN
BRN
BRN
SCS
A10
BRN
GRY
DATA LINK CONNECTOR
K-LINE
A21
GRY
WHT/GRN
BLK
P
G401

(cont'd)

## System Descriptions (cont'd)

### ECM Circuit Diagram (cont'd)

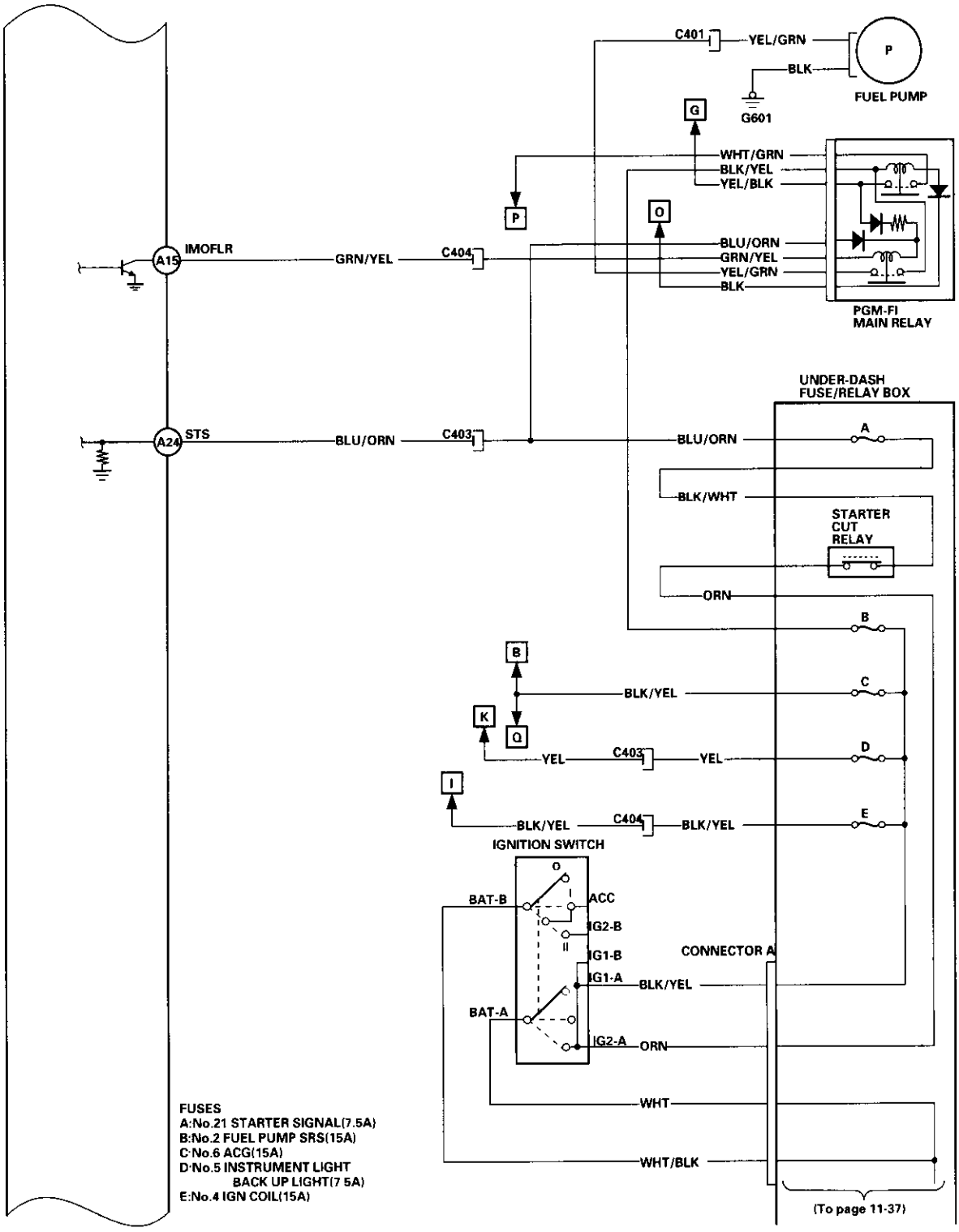

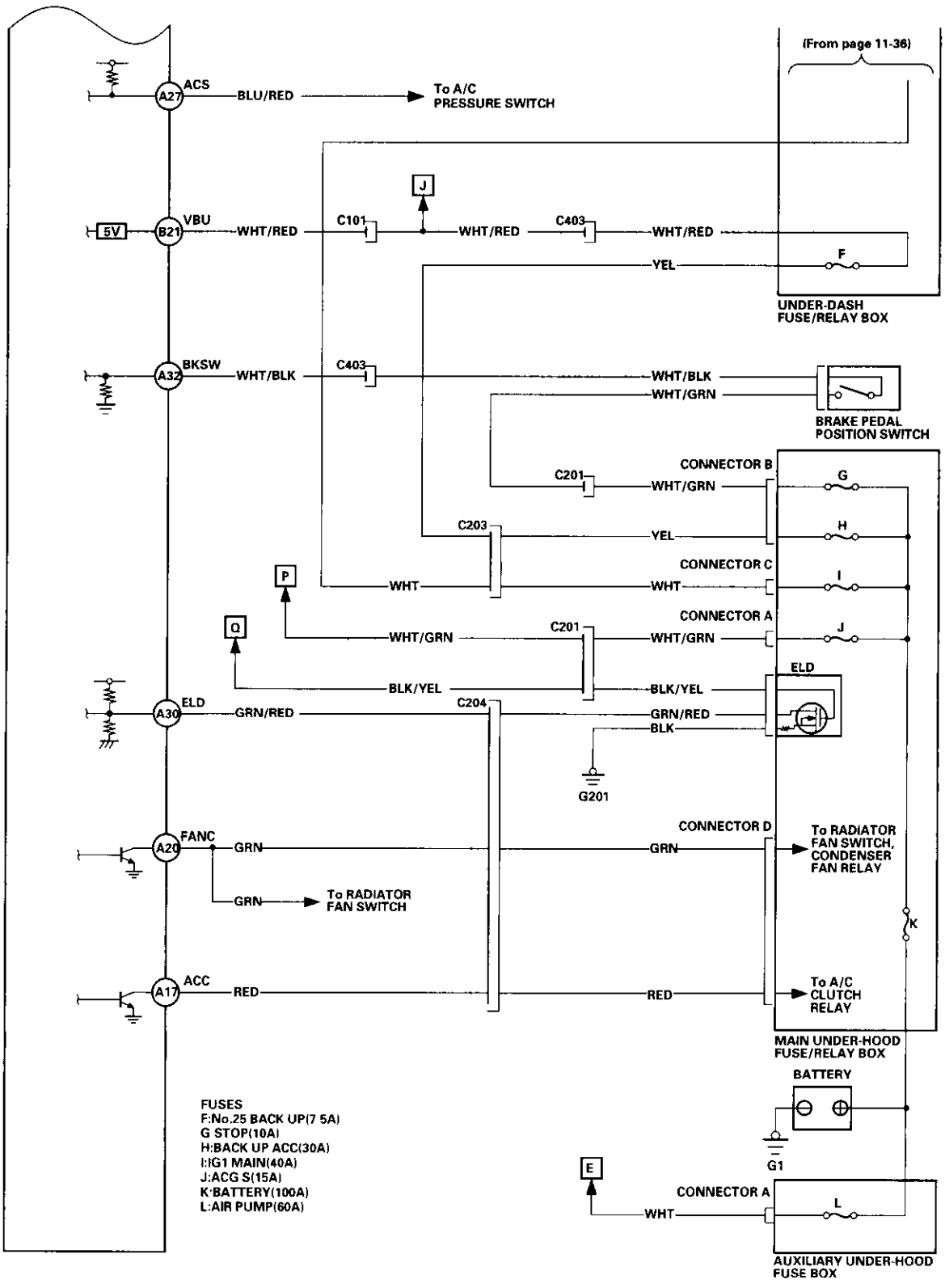
(From page 11-36)
ACS
A27
BLU/RED
To A/C PRESSURE SWITCH
J
5V
VBU
B21
WHT/RED
C101
WHT/RED
C403
WHT/RED
YEL
F
UNDER-DASH FUSE/RELAY BOX
BKSW
A32
WHT/BLK
C403
WHT/BLK
WHT/GRN
BRAKE PEDAL POSITION SWITCH
CONNECTOR B
C201
WHT/GRN
G
C203
YEL
H
CONNECTOR C
P
WHT
WHT
I
CONNECTOR A
Q
WHT/GRN
C201
WHT/GRN
J
ELD
BLK/YEL
BLK/YEL
ELD
A30
GRN/RED
C204
GRN/RED
BLK
G201
CONNECTOR D
FANC
A20
GRN
GRN
To RADIATOR FAN SWITCH, CONDENSER FAN RELAY
GRN
To RADIATOR FAN SWITCH
K
ACC
A17
RED
RED
To A/C CLUTCH RELAY
MAIN UNDER-HOOD FUSE/RELAY BOX
BATTERY
G1
FUSES
F:No.25 BACK UP(7 5A)
G STOP(10A)
H:BACK UP ACC(30A)
I:IG1 MAIN(40A)
J:ACG S(15A)
K:BATTERY(100A)
L:AIR PUMP(60A)
E
CONNECTOR A
WHT
L
AUXILIARY UNDER-HOOD FUSE BOX

## How to Set Readiness Codes

### Malfunction Indicator Lamp (MIL) Indication (In relation to Readiness Codes)

The vehicle has certain "readiness codes" that are part of the on-board diagnostics for the emissions systems. If the vehicle's battery has been disconnected or gone dead, if the DTCs have been cleared, or if the ECM has been reset, these codes are reset. In some states, part of the emissions testing is to make sure these codes are set to complete. If all of them are not set to complete, the vehicle may fail the emission test, or the test cannot be finished.

To check if the readiness codes are complete, turn the ignition switch ON (II), but do not start the engine. The MIL will come on for 15-20 seconds. If it then goes off, the readiness codes are complete. If it blinks several times, one or more readiness codes are not complete. To set readiness codes from incomplete to complete, do the procedure for the appropriate code.

### Catalytic Converter Monitor and Readiness Code

NOTE:
- Do not turn the ignition switch off during the procedure.
- All readiness codes are cleared when the battery is disconnected or when the ECM is cleared with the OBD II scan tool or Honda PGM Tester.
- Low ambient temperatures or excessive stop-and-go traffic may increase the drive time needed to switch the readiness code from incomplete to complete.
- The readiness code will not switch to complete until all the enable criteria are met.
- If a fault in the secondary HO2S system caused the MIL to come on, the readiness code cannot be set to complete until you correct the fault.

#### Enable Criteria
- ECT at 158°F (70°C) or higher.
- Intake air temperature (IAT) at 20°F (−7°C) or higher.
- Vehicle speed is steady, and vehicle speed sensor (VSS) reads more then 25 mph (40 km/h).

#### Procedure
1. Connect the scan tool to the vehicle's data link connector (DLC), and bring up the tool's generic OBD II mode.
2. Start the engine.
3. Test-drive the vehicle under stop-and-go conditions with short periods of steady cruise. After about 5 miles (8 km), the readiness code should switch from incomplete to complete.
4. If the readiness code is still set to incomplete, check for a temporary DTC. If there is no DTC, one or more of the enable criteria were probably not met; repeat the procedure.

## Evaporative Emissions (EVAP) Control System Monitor and Readiness code

NOTE:
- All readiness code are cleared when the battery is disconnected or when the ECM is cleared with the OBD II scan tool or Honda PGM Tester.
- The enable criteria must be repeated if the intake air temperature (IAT) drops lower then 36°F (20°C) from its value at engine start up.

### Enable Criteria
- At engine start up, ECT and IAT are higher then 32°F (0°C) , but lower then 95°F (35°C).
- At engine start up, the ECT and IAT are within 12°F (7°C) of each other.

### Procedure
1. Connect the scan tool to the vehicle's data link connector (DLC), and bring up the tool's generic OBD II mode.
2. Start the engine.
3. Test-drive the vehicle under stop-and-go conditions with short periods of steady cruise. After about 2.5 miles (4.0 km), the readiness code should switch from incomplete to complete.
4. If the readiness code is still set to incomplete, check for a temporary DTC. If there is no DTC, one or more of the enable criteria were probably not met; repeat the procedure.

## Air Fuel Ratio (A/F) Sensor Monitor and Readiness Code

NOTE:
- Do not turn the ignition switch off during the procedure.
- All readiness codes are cleared when the battery is disconnected or when the ECM is cleared with the OBD II scan tool or Honda PGM Tester.

### Enable Criteria
ECT at 140°F (60°C) or higher.

### Procedure
1. Connect the scan tool to the vehicle's data link connector (DLC), and bring up the tool's generic OBD II mode.
2. Start the engine.
3. Test-drive the vehicle under stop-and-go conditions with short periods of steady cruise. During the drive, decelerate (wirh the throttle fully closed) for 5 seconds. After about 3.5 miles (5.6 km), the readiness code should switch from incomplete to complete.
4. If the readiness code is still set to incomplete, check for a temporary DTC. If there is no DTC, the enable criteria was probably not met; repeat the procedure.

## Air/Fuel Ratio (A/F) Sensor Heater Monitor Readiness Code

NOTE: All readiness codes are cleared when the battery is disconnected or when the ECM is cleared with the OBD II scan tool or Honda PGM Tester.

### Procedure
1. Connect the scan tool to the vehicle's data link connector (DLC), and bring up the tool's generic OBD II mode.
2. Start the engine, and let it idle for 1 minute. The readiness code should switch from incomplete to complete.
3. If the readiness code is still set to incomplete, check for a temporary DTC. If there is no DTC, repeat the procedure.

(cont'd)

## How to Set Readiness Codes (cont'd)

### Misfire Monitor and Readiness Code

- This readiness code is always set to available because misfiring is continuously monitored.
- Monitoring pauses, and the misfire counter resets, if the vehicle is driven over a rough road.
- Monitoring also pauses, and the misfire counter holds at its current value, if the throttle position changes more than a predetermined value, or if driving conditions fall outside the range of any related enable criteria.

### Fuel System Monitor and Readiness Code

- This readiness code is always set to available because the fuel system is continuously monitored during closed loop operation.
- Monitoring pauses when the catalytic converter, EVAP control system, and HO2S monitors are active.
- Monitoring also pauses when any related enable criteria are not being met. Monitoring resumes when the enable criteria is again being met.

### Comprehensive Component Monitor and Readiness Code

This readiness code is always set to available because the comprehensive component monitor is continuously running whenever the engine is cranking or running.

## Component Location Index

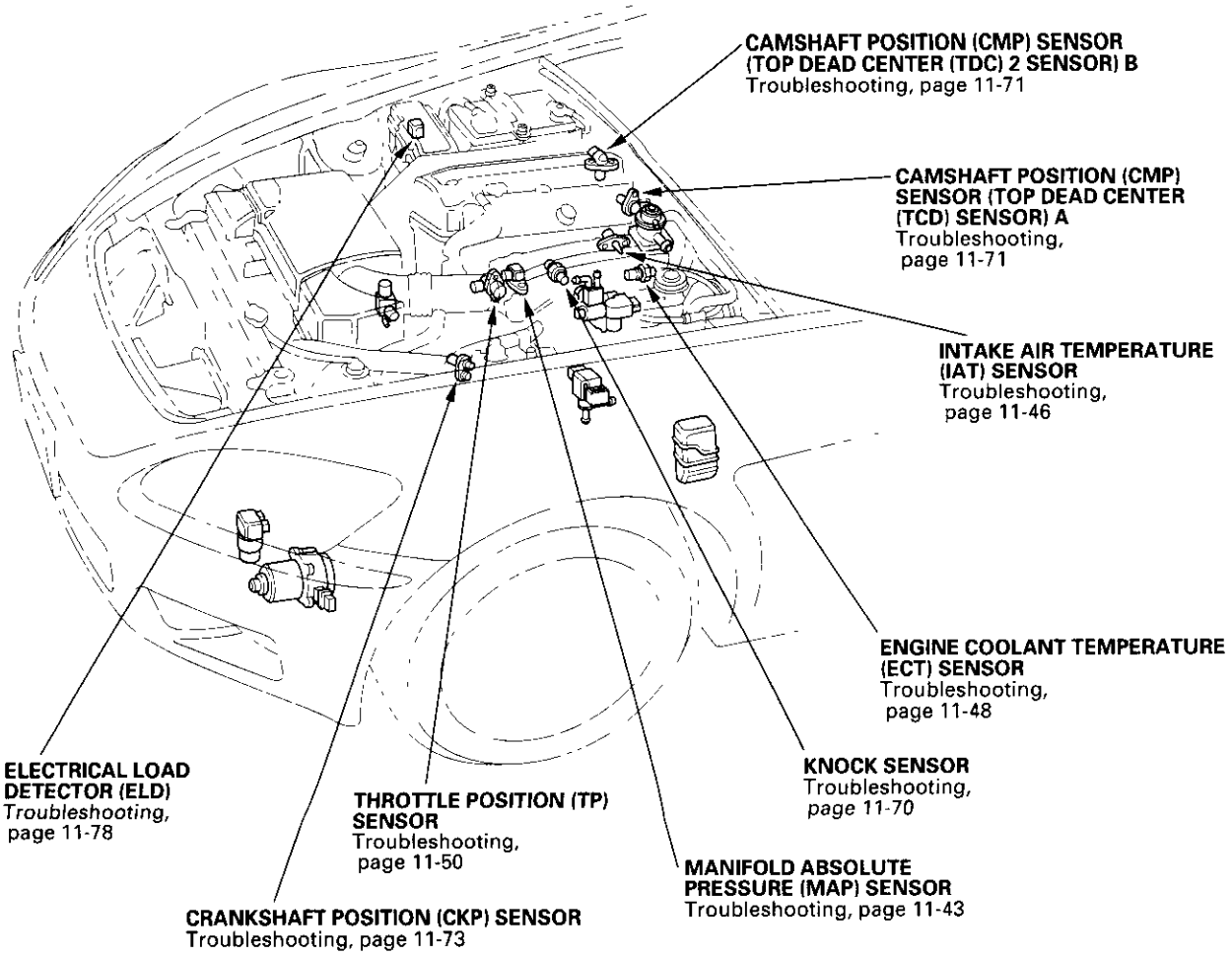


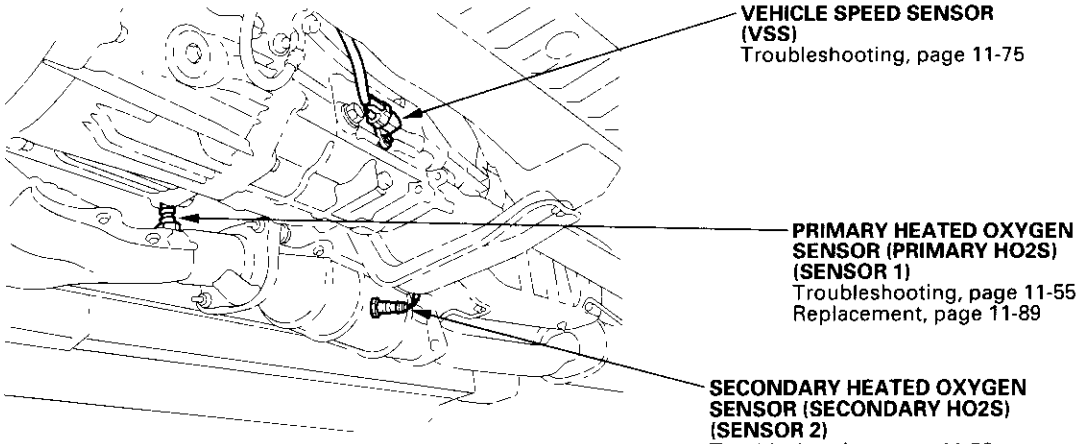


(cont'd)

## Component Location Index (cont'd)

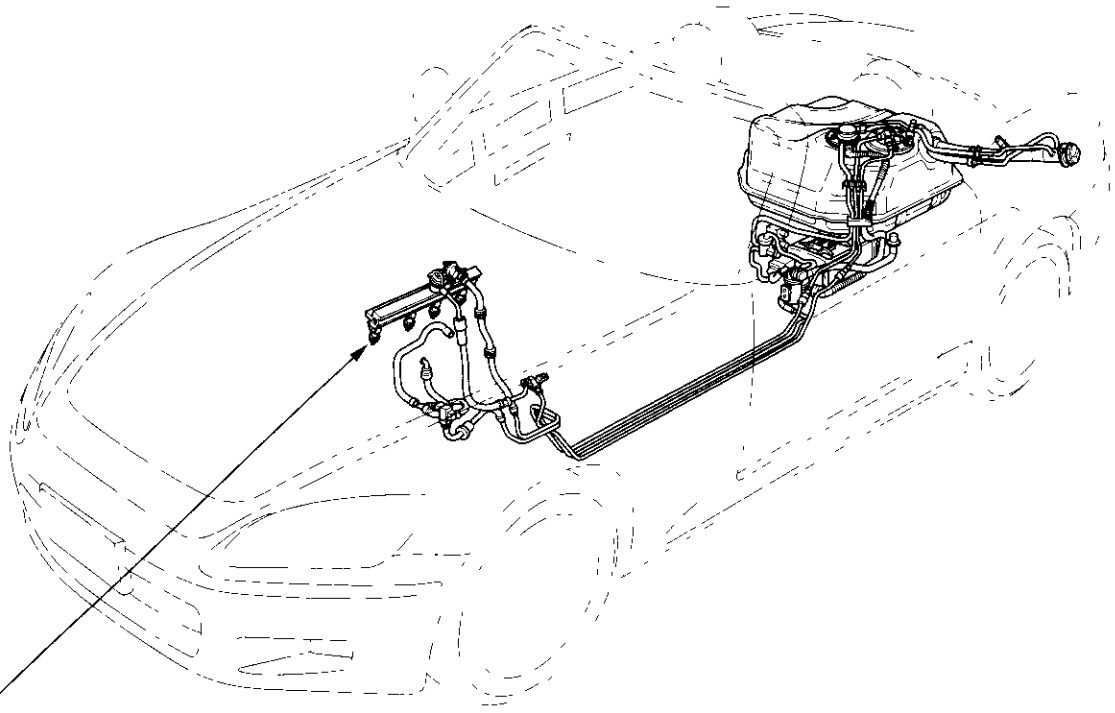

**INJECTORS**
Replacement, page 11-87

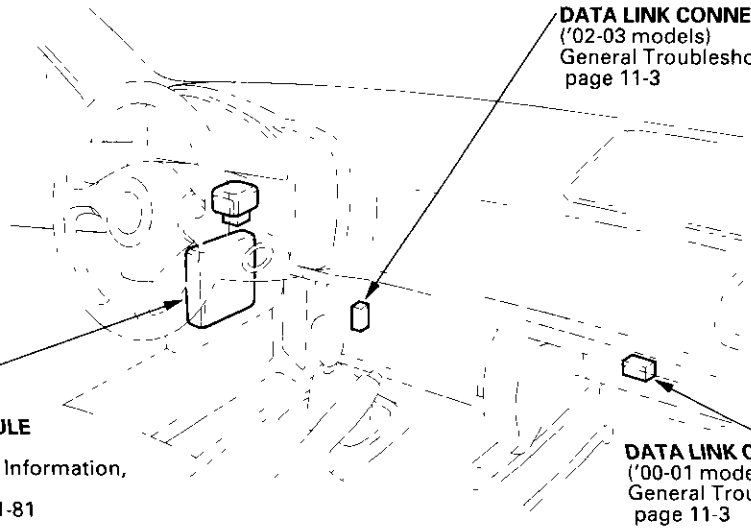

**DATA LINK CONNECTOR (DLC)**
('02-03 models)
General Troubleshooting Information, page 11-3

**ENGINE CONTROL MODULE (ECM)**
General Troubleshooting Information, page 11-3
Troubleshooting, page 11-81

**DATA LINK CONNECTOR (DLC)**
('00-01 models)
General Troubleshooting Information, page 11-3

## DTC Troubleshooting

### DTC P0107: MAP Sensor Circuit Low Voltage

1. Turn the ignition switch ON (II).
2. Check the MAP with the scan tool.

   *Is approx. 101 kPa (760 mmHg, 30 in.Hg), 2.9 V indicated?*

   **YES** – Intermittent failure, system is OK at this time. Check for poor connections or loose terminals at the MAP sensor and at the ECM. ■

   **NO** – Go to step 3.
3. Turn the ignition switch OFF.
4. Disconnect the MAP sensor 3P connector.
5. Turn the ignition switch ON (II).
6. Measure voltage between MAP sensor 3P connector terminals No. 1 and No. 2.

   **MAP SENSOR 3P CONNECTOR**

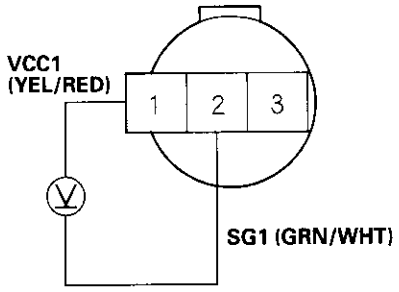


   Wire side of female terminals

   *Is there about 5 V?*

   **YES** – Go to step 7.

   **NO** – Repair open in the wire between the ECM (C 19) and the MAP sensor. ■
7. Check the MAP with the scan tool.

   *Is approx. 2 kPa (15 mmHg, 0.6 in.Hg), 0.5 V or less indicated?*

   **YES** – Go to step 8.

   **NO** – Replace the MAP sensor. ■
8. Turn the ignition switch OFF.
9. Disconnect the ECM connector C (31P).
10. Check for continuity between MAP sensor connector terminal No. 3 and body ground.

    **MAP SENSOR 3P CONNECTOR**

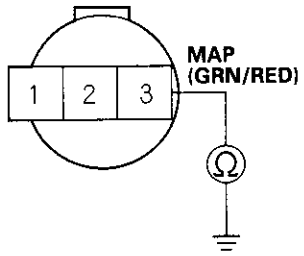


    Wire side of female terminals

    *Is there continuity?*

    **YES** – Repair short in the wire between the ECM (C17) and the MAP sensor. ■

    **NO** – Substitute a known-good ECM and recheck (see page 11-5). If normal MAP is indicated, replace the original ECM. ■

## DTC Troubleshooting (cont'd)

### DTC P0108: MAP Sensor Circuit High Voltage

1. Start the engine. Hold the engine at 3,000 rpm with no load (in neutral) until the radiator fan comes on, then let it idle.
2. Check the MAP with the scan tool.

   *Is approx. 101 kPa (760 mmHg, 30 in.Hg), 2.9 V or higher indicated?*

   **YES** – Go to step 3.

   **NO** – Intermittent failure, system is OK at this time. Check for poor connections or loose terminals at the MAP sensor and at the ECM. ■
3. Turn the ignition switch OFF.
4. Disconnect the MAP sensor 3P connector.
5. Install a jumper wire between MAP sensor 3P connector terminals No. 2 and No. 3.

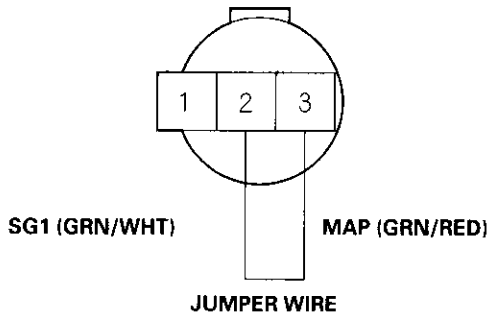

Wire side of female terminals

6. Turn the ignition switch ON (II).
7. Check the MAP with the scan tool.

   *Is about 101 kPa (760 mmHg, 30 in.Hg), 2.9 V or higher indicated?*

   **YES** – Go to step 8.

   **NO** – Replace the MAP sensor. ■
8. Remove the jumper wire.
9. Measure voltage between MAP sensor connector terminals No. 1 and No. 2.

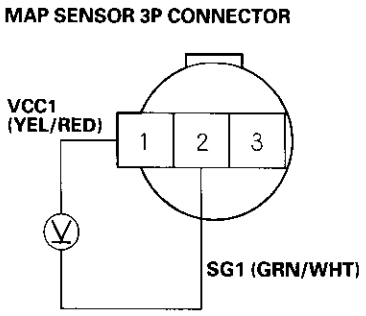

Wire side of female terminals

   *Is there about 5 V?*

   **YES** – Go to step 10.

   **NO** – Repair open in the wire between the ECM (C7) and the MAP sensor. ■
10. Turn the ignition switch OFF.
11. Install a jumper wire on the ECM connector terminals between C7 and C17.

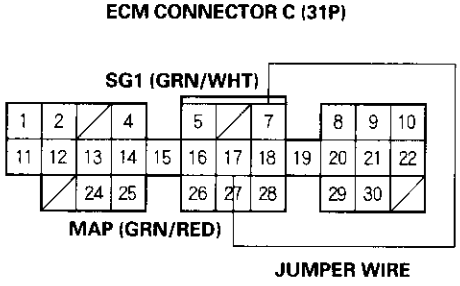

Wire side of female terminals

12. Turn the ignition switch ON (II).
13. Check the MAP with the scan tool.

    *Is about 101 kPa (760 mmHg, 30 in.Hg), or 2.9 V or higher indicated?*

    **YES** – Substitute a known-good ECM and recheck (see page 11-5). If normal MAP is indicated, replace the original ECM. ■

    **NO** – Repair open in the wire between the ECM (C17) and the MAP sensor. ■

## **DTC P1128:** MAP Sensor Signal Lower Than Expected

1. Turn the ignition switch ON (II).
2. Check the MAP with the scan tool.

   *Is 54.1 kPa (406 mmHg, 16.0 in.Hg, 1.6 V) or higher indicated?*

   **YES** – Intermittent failure, system is OK at this time. ■

   **NO** – Replace the MAP sensor. ■

## **DTC P1129:** MAP Sensor Signal Higher Than Expected

1. Start the engine. Hold the engine at 3,000 rpm with no load (in neutral) until the radiator fan comes on, then let it idle.
2. Check the MAP with the scan tool.

   *Is 36.9 kPa (277 mmHg, 10.9 in.Hg, 1.1 V) or less indicated?*

   **YES** – Intermittent failure, system is OK at this time. ■

   **NO** – Replace the MAP sensor. ■

## DTC Troubleshooting (cont'd)

### DTC P0112: IAT Sensor Circuit Low Voltage

1. Turn the ignition switch ON (II).
2. Check the IAT with the scan tool.

   *Is 302°F (150°C) or higher (or H-Limit in Honda mode of PGM Tester) or 0 V indicated?*

   **YES** – Go to step 3.

   **NO** – Go to step 8.
3. Disconnect the IAT sensor 2P connector.
4. Check the IAT with the scan tool.

   *Is 302°F (150°C) or higher (or H-Limit in Honda mode of PGM Tester) or 0 V indicated?*

   **YES** – Go to step 5.

   **NO** – Replace the IAT sensor. ■
5. Turn the ignition switch OFF.
6. Disconnect the ECM connector C (31P).
7. Check the continuity between IAT sensor 2P connector terminal No. 2 and body ground.

**IAT SENSOR 2P CONNECTOR**

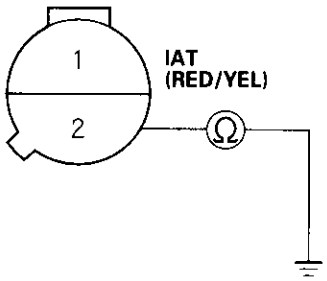


Wire side of female terminals

*Is there continuity?*

**YES** – Repair short in the wire between the ECM (C25) and the IAT sensor. ■

**NO** – Substitute a known-good ECM and recheck (see page 11-5). If normal IAT is indicated, replace the original ECM. ■

8. Check the temperature reading on the scan tool. Be aware that if the engine is warm, the reading will be higher than ambient temperature. If the engine is cold, the IAT and ECT will have the same value.

   *Is the correct ambient temperature indicated?*

   **YES** – Intermittent failure, system is OK at this time. Check for poor connections or loose terminals at the IAT sensor and at the ECM. ■

   **NO** – Replace the IAT sensor. ■

## DTC P0113: IAT Sensor Circuit High Voltage

1. Turn the ignition switch ON (II).
2. Check the IAT with the scan tool.

   *Is −4°F (−20°C) or less (or L-Limit in Honda mode of PGM Tester) or 5 V indicated?*

   **YES** – Go to step 3.

   **NO** – Intermitent failure, system is OK at this time. Check for poor connections or loose terminals at the IAT sensor and the ECM. ■
3. Disconnect the IAT sensor 2P connector.
4. Connect IAT sensor 2P connector terminals No. 1 and No. 2 with a jumper wire.

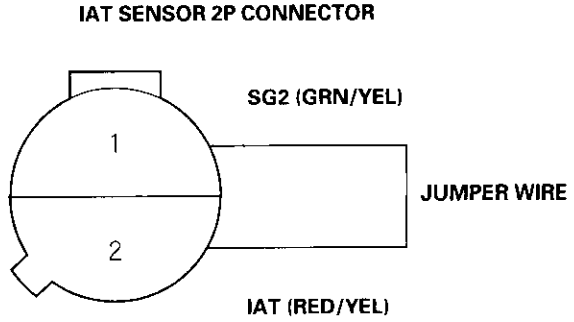


Wire side of female terminals

5. Check the IAT with the scan tool.

   *Is −4°F (−20°C) or less (or L-Limit in Honda mode of PGM Tester) or 5 V indicated?*

   **YES** – Go to step 6.

   **NO** – Replace the IAT sensor. ■
6. Turn the ignition switch OFF.
7. Connect ECM connector terminals C18 and C25 with a jumper wire.

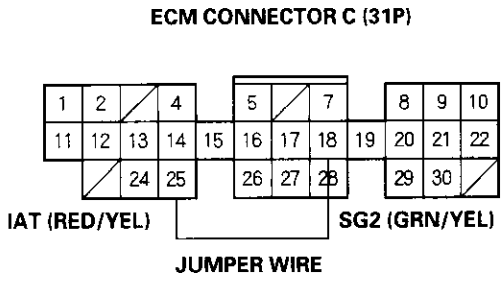


Wire side of female terminals

8. Turn the ignition switch ON (II).
9. Check the IAT with the scan tool.

   *Is −4°F (−20°C) or less (or L-Limit in Honda mode of PGM Tester) or 5 V indicated?*

   **YES** – Substitute a known-good ECM and recheck (see page 11-5). If normal IAT is indicated, replace the original ECM. ■

   **NO** – Repair open in the wire between the ECM (C18, C25) and the IAT sensor. ■

## DTC Troubleshooting (cont'd)

### **DTC P0116:** ECT Sensor Range/Performance Problem

NOTE: If DTC P0117 and/or P0118 are stored at the same time as DTC P0116, troubleshoot those DTCs first, then reckeck for DTC P0116.

1. Start the engine. Hold the engine at 3,000 rpm with no load (in neutral) until the radiator fan comes on, then let it idle.
2. Check the ECT with the scan tool.

   *Is 176–212°F (80–100°C) or 0.47–0.78 V indicated?*

   **YES** – Intermittent failure, system is OK at this time. Check the thermostat and the cooling system. ■

   **NO** – Check the thermostat and the cooling system. If they are OK, replace the ECT sensor. ■

### **DTC P0117:** ECT Sensor Circuit Low Voltage

1. Turn the ignition switch ON (II).
2. Check the ECT with the scan tool.

   *Is 302°F (150°C) or higher (or H-Limit in Honda mode of PGM Tester) or 0 V indicated?*

   **YES** – Go to step 3.

   **NO** – Intermittent failure, system is OK at this time. Check for poor connections or loose wires at the ECT sensor and at the ECM. ■
3. Disconnect the ECT sensor 2P connector.
4. Check the ECT with the scan tool.

   *Is 302°F (150°C) or higher (or H-Limit in Honda mode of PGM Tester) or 0 V indicated?*

   **YES** – Go to step 5.

   **NO** – Replace the ECT sensor. ■
5. Turn the ignition switch OFF.
6. Disconnect the ECM connector C (31P).
7. Check for continuity between ECT sensor 2P connector terminal No. 2 and body ground.

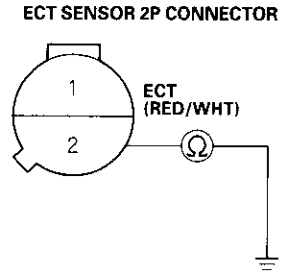


Wire side of female terminals

*Is there continuity?*

**YES** – Repair short in the wire between the ECM (C26) and the ECT sensor. ■

**NO** – Substitute a known-good ECM and recheck (see page 11-5). If normal ECT is indicated, replace the original ECM. ■

## DTC P0118: ECT Sensor Circuit High Voltage

1. Turn the ignition switch ON (II).
2. Check the ECT with the scan tool.

   *Is −4°F (−20°C) or less (or L-Limit in Honda mode of PGM Tester) or 5 V indicated?*

   **YES** − Go to step 3.

   **NO** − Intermittent failure, system is OK at this time. Check for poor connections or loose terminals at the ECT sensor and at the ECM.■
3. Turn the ignition switch OFF.
4. Disconnect the ECT sensor 2P connector.
5. Connect ECT sensor 2P connector terminals No. 1 and No. 2 with a jumper wire.

**ECT SENSOR 2P CONNECTOR**

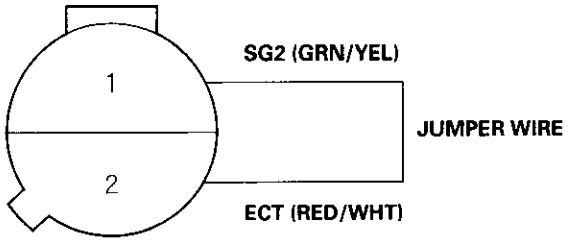


Wire side of female terminals

6. Turn the ignition switch ON (II).
7. Check the ECT with the scan tool.

   *Is −4°F (−20°C) or less (or L-Limit in Honda mode of PGM Tester) or 5 V indicated?*

   **YES** − Go to step 8.

   **NO** − Replace the ECT sensor.■
8. Turn the ignition switch OFF.
9. Connect ECM connector terminals C18 and C26 with a jumper wire.

**ECM CONNECTOR C (31P)**

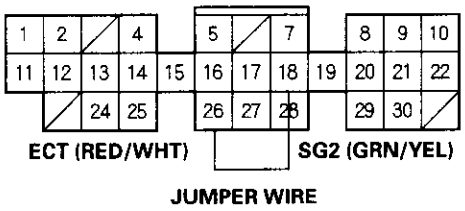


Wire side of female terminals

10. Turn the ignition switch ON (II).
11. Check the ECT with the scan tool.

    *Is −4°F (−20°C) or less (or L-Limit in Honda mode of PGM Tester) or 5 V indicated?*

    **YES** − Substitute a known-good ECM and recheck (see page 11-5). If normal ECT is indicated, replace the original ECM.■

    **NO** − Repair open in the wire between the ECM (C 18, C26) and the ECT sensor.■

## DTC Troubleshooting (cont'd)

### DTC P0122: TP Sensor Circuit Low Voltage

1. Turn the ignition switch ON(II).
2. Check the throttle position with the scan tool.

   *Is there about 6% when the throttle is fully closed and about 90% when the throttle is fully opened?*

   **YES** – Intermittent failure, system is OK at this time. Check for poor connections or loose wires at the TP sensor and at the ECM. ■

   **NO** – Go to step 3.
3. Turn the ignition switch OFF.
4. Disconnect the TP sensor 3P connector.
5. Turn the ignition switch ON (II).
6. Measure voltage between TP sensor 3P connector terminals No. 1 and No. 3.

**TP SENSOR 3P CONNECTOR**

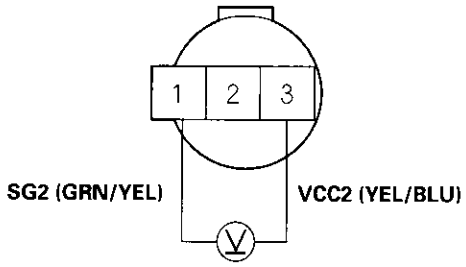


Wire side of female terminals

*Is there about 5 V?*

**YES** – Go to step 7.

**NO** – Go to step 13.

7. Turn the ignition switch OFF.
8. At the sensor side, measure resistance between TP sensor 3P connector terminals No. 1 and No. 2 with the throttle fully closed.

**TP SENSOR 3P CONNECTOR**

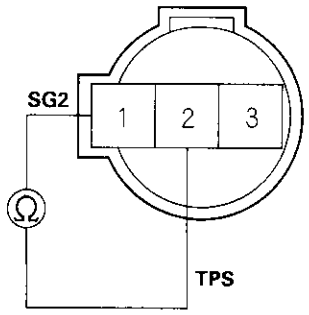


Terminal side of male terminals

*Is there about 0.5 – 0.9 kΩ ?*

**YES** – Go to step 9.

**NO** – Replace the throttle body. ■

9. Measure resistance between TP sensor 3P connector terminals No. 2 and No. 3 with the throttle fully closed.

**TP SENSOR 3P CONNECTOR**

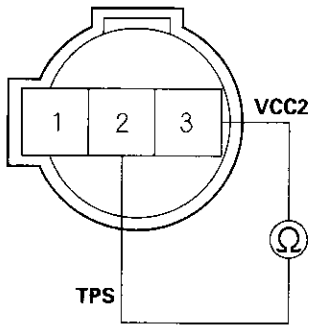


Terminal side of male terminals

*Is there about 4.5 kΩ ?*

**YES** Go to step 10.

**NO** – Replace the throttle body. ■

10. Reconnect the TP sensor 3P connector.

11. Turn the ignition switch ON (II).

12. Measure voltage between ECM connector terminals C18 and C27.

**ECM CONNECTOR C (31P)**

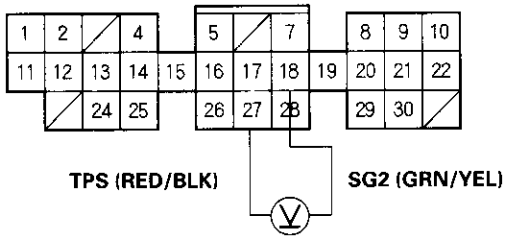


Wire side of female terminals

*Is there about 0.3 V when the throttle is fully closed and about 4.5 V when the throttle is fully opened?*

**YES**—Substitute a known-good ECM and recheck (see page 11-5). If the TP sensor voltage is now normal, replace the ECM.■

**NO**—Repair short in the wire between the ECM (C27) and the TP sensor.■

13. Measure voltage between ECM connector terminals C18 and C28.

**ECM CONNECTOR C (31P)**

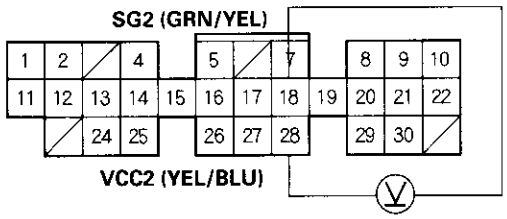


Wire side of female terminals

*Is there about 5 V?*

**YES**—Repair open in the wire between the ECM (C28) and the TP sensor.■

**NO**—Substitute a known-good ECM and recheck (see page 11-5). If prescribed voltage is now available, replace the original ECM.■

## **DTC P1121:** TP Sensor Signal Lower Than Expected

1. Turn the ignition switch ON (II).

2. Check the throttle position with the scan tool.

*Is 9.4% or higher indicated when the throttle is fully opened?*

**YES**—Intermittent failure, system is OK at this time.■

**NO**—Replace the TP sensor (throttle body).■

## DTC Troubleshooting (cont'd)

### **DTC P1122:** TP Sensor Signal Higher Than Expected

1. Turn the ignition switch ON (II).
2. Check the throttle position with the scan tool.

   *Is 14.1% or less indicated when the throttle is fully closed?*

   **YES** – Intermittent failure, system is OK at this time. ■

   **NO** – Replace the TP sensor (throttle body). ■

## **DTC P0123:** TP Sensor Circuit High Voltage

1. Turn the ignition switch ON (II).
2. Check the throttle position with the scan tool.

   *Is there approx. 6% when the throttle is fully closed and approx. 90% when the throttle is fully opened?*

   **YES** – Intermittent failure, system is OK at this time. Check for poor connections or loose terminals at the TP sensor and at the ECM. ■

   **NO** – Go to step 3.
3. Turn the ignition switch OFF.
4. Disconnect the TP sensor 3P connector.
5. Turn the ignition switch ON (II).
6. At the wire harness side, measure voltage between TP sensor 3P connector terminals No. 1 and No. 3.

**TP SENSOR 3P CONNECTOR**

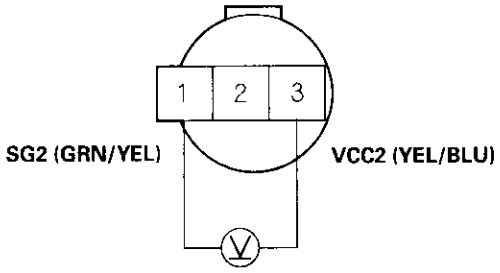


Wire side of female terminals

*Is there about 5 V?*

**YES** – Replace the throttle body. ■

**NO** – Go to step 7.

7. Measure voltage between ECM connector terminals C18 and C28.

**ECM CONNECTOR C (31P)**

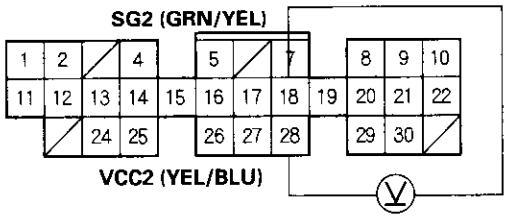


Wire side of female terminals

*Is there about 5 V?*

**YES** – Repair open in the wire between the ECM (C18) and the TP sensor. ■

**NO** – Substitute a known-good ECM and recheck (see page 11-5). If prescribed voltage is now available replace the original ECM. ■

## DTC Troubleshooting (cont'd)

### DTC P0128: Cooling System Malfunction ('02-03 models)

NOTE: If the DTCs listed below are stored at the same time as DTC P0128, troubleshoot those DTCs first, then recheck for P0128.

P0107, P0108, P1128, P1129: Manifold Absolute Pressure (MAP) Sensor
P1106, P1107, P1108: Barometric Pressure (BARO) Sensor
P1259: VTEC System
P0116, P0117, P0118: Engine Coolant Temperature (ECT) Sensor
P0112, P0113: Intake Air Temperature (IAT) Sensor
P0335, P0336: Crankshaft Position (CKP) Sensor
P0300: Random Misfire
P0301, P0302, P0303, P0304: No. 1, No. 2, No. 3 or No. 4 Cylinder Misfire
P0505: Idle control System
P1519: Idle Air Control (IAC) Valve

DTC P0128 can occasionally set when the hood is opened while the engine is running.

1. Check the engine coolant level.

   *Is the engine coolant level low?*

   **YES** – Refill the engine coolant. If necessary, repair the cooling leakage. ■

   **NO** – Go to step 2.

2. Turn the ignition switch ON (II), and make sure the A/C is off.

3. Check the radiator fan.

   *Does the radiator fan keep running?*

   **YES** – Check the radiator fan circuit (see page 10-15), radiator fan switch circuit (see page 10-17), and the radiator fan switch (see page 10-18). If they are OK, substitute a known-good ECM and recheck (see page 11-5). If the symptom/indicator goes away, replace the original ECM. ■

   **NO** – Replace the thermostat (see page 10-10). ■

## **DTC P0131:** Primary HO2S (Sensor 1) Circuit Low Voltage

1. Reset the ECM (see page 11-4).
2. Start the engine. Hold the engine at 3,000 rpm with no load (in neutral) until the radiator fan comes on.
3. Check the primary HO2S (Sensor 1) output voltage with the scan tool during acceleration using wide open throttle.

   *Does the voltage stay at 0.5 V or less?*

   **YES** - Go to step 4.

   **NO** – Intermittent failure, system is OK at this time. Check for poor connections or loose terminals at the primary HO2S (Sensor 1) and at the ECM. ■
4. Check the fuel pressure (see page 11-105).

   *Is it normal?*

   **YES** – Go to step 5.

   **NO** – Repair the fuel supply system. ■
5. Turn the ignition switch OFF.
6. Disconnect the primary HO2S (Sensor 1) 4P connector.
7. Start the engine and let it idle.
8. Check the primary HO2S (Sensor 1) output voltage with the scan tool.

   *Does it stay at 0.5 V or less?*

   **YES** Go to step 9.

   **NO** – Replace the primary HO2S (Sensor 1). ■
9. Turn the ignition switch OFF.
10. Disconnect the ECM connector C (31P).
11. Check for continuity between primary HO2S (Sensor 1) 4P connector terminal No. 1 and body ground.

**PRIMARY HO2S (Sensor 1) 4P CONNECTOR**

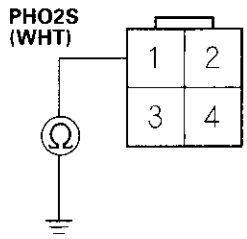


Wire side of female terminals

*Is there continuity?*

**YES** Repair short in the wire between the ECM (C16) and the primary HO2S (Sensor 1). ■

**NO** Substitute a known-good ECM and recheck (see page 11-5). If the symptom/indication goes away, replace the original ECM. ■

## DTC Troubleshooting (cont'd)

### DTC P0132: Primary HO2S (Sensor 1) Circuit High Voltage

1. Reset the ECM (see page 11-4).
2. Start the engine. Hold the engine at 3,000 rpm with no load (in neutral) until the radiator fan comes on.
3. Check the primary HO2S (Sensor 1) output voltage with the scan tool.

   *Does the voltage stay at 0.9 V or more?*

   **YES** – Go to step 4.

   **NO** – Intermittent failure, system is OK at this time. Check for poor connections or loose terminals at the Primary HO2S (Sensor 1) and at the ECM. ■
4. Turn the ignition switch OFF.
5. Disconnect the primary HO2S (Sensor 1) 4P connector.
6. Connect primary HO2S (Sensor 1) 4P connector terminals No. 1 and No. 2 with a jumper wire.

**PRIMARY HO2S (Sensor 1) 4P CONNECTOR**

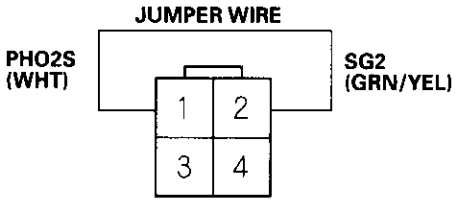


Wire side of female terminals

7. Turn the ignition switch ON (II).
8. Check the primary HO2S (Sensor 1) output voltage with the scan tool.

   *Is there 0.9 V or more?*

   **YES** – Go to step 9.

   **NO** – Replace the primary HO2S (Sensor 1). ■
9. Turn the ignition switch OFF.
10. Connect ECM connector terminals C16 and C18 with a jumper wire.

**ECM CONNECTOR C (31P)**

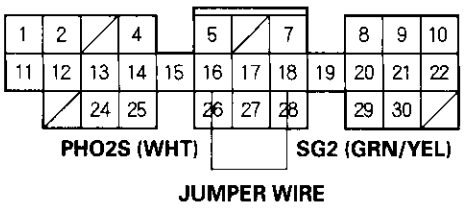


Wire side of female terminals

11. Turn the ignition switch ON (II).
12. Check the primary HO2S (Sensor 1) output voltage with the scan tool.

    *Is there 0.9 V or more?*

    **YES** – Substitute a known-good ECM and recheck (see page 11-5). If the symptom/indication goes away replace the original ECM. ■

    **NO** – Repair open in the wire between the ECM (C16, C18) and the primary HO2S (Sensor 1). ■

## **DTC P0133:** Primary HO2S (Sensor 1) Circuit Slow Response

NOTE: If DTC P0131, P0132 and/or P0135 are stored at the same time as DTC P0133, troubleshoot those DTCs first, then recheck for DTC P0133.

1. Reset the ECM (see page 11-4).
2. Start the engine. Hold the engine at 3,000 rpm with no load (in neutral) until the radiator fan comes on.
3. Test-drive under the following conditions.
   - 55 mph (89km/n) steady speed
   - M/T in 6th gear
   - Until readiness code or Temporary DTC P0133 comes on
4. Check for a Temporary DTC with the scan tool.

   *Is Temporary DTC P0133 indicated?*

   **YES** – Replace the primary HO2S (Sensor 1). ■

   **NO** – Intermittent failure, system is OK at this time. Check for poor connections or loose terminals at the primary HO2S (Sensor 1) and at the ECM. ■

## DTC Troubleshooting (cont'd)

### **DTC P0137:** Secondary HO2S (Sensor 2) Circuit Low Voltage

1. Reset the ECM (see page 11-4).
2. Start the engine. Hold the engine at 3,000 rpm with no load (in neutral) until the radiator fan comes on.
3. Check the secondary HO2S (Sensor 2) output voltage at 3,000 rpm with the scan tool.

   *Does the voltage stay at 0.3 V or less?*

   **YES** – Go to step 4.

   **NO** – Intermittent failure, system is OK at this time. Check for poor connections or loose terminals at the secondary HO2S (Sensor 2) and at the ECM. ■
4. Turn the ignition switch OFF.
5. Disconnect the secondary HO2S (Sensor 2) 4P connector.
6. Start the engine.
7. Check the secondary HO2S (Sensor 2) output voltage with the scan tool.

   *Does the voltage stay at 0.3 V or less?*

   **YES** – Go to step 8.

   **NO** – Replace the secondary HO2S (Sensor 2). ■
8. Turn the ignition switch OFF.
9. Disconnect ECM connector C (31P).
10. Check for continuity between secondary HO2S (Sensor 2) 4P connector terminal No. 2 and body ground.

**SECONDARY HO2S (SENSOR 2) 4P CONNECTOR**

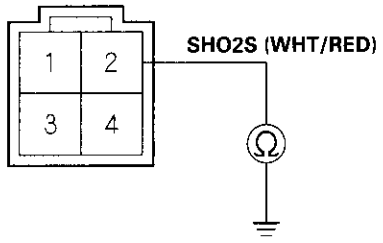


Terminal side of male terminals

*Is there continuity?*

**YES** – Repair short in the wire between the ECM (C15) and the secondary HO2S (Sensor 2). ■

**NO** – Substitute a known-good ECM and recheck (see page 11-5). If the symptom/indication goes away, replace the original ECM. ■

## **DTC P0138:** Secondary HO2S (Sensor 2) Circuit High Voltage

1. Reset the ECM (see page 11-4).
2. Start the engine. Hold the engine at 3,000 rpm with no load (in neutral) until the radiator fan comes on.
3. Check the secondary HO2S (Sensor 2) output voltage at 3,000 rpm with the scan tool.

   *Does the voltage stay at 0.6 V or more?*

   **YES** – Go to step 4.

   **NO** – Intermittent failure, system is OK at this time. Check for poor connections or loose terminals at the secondary HO2S (Sensor 2) and at the ECM. ■
4. Turn the ignition switch OFF.
5. Disconnect the secondary HO2S (Sensor 2) 4P connector.
6. Connect secondary HO2S (Sensor 2) 4P connector terminals No. 1 and No. 2 with a jumper wire.

**SECONDARY HO2S (SENSOR 2) 4P CONNECTOR**

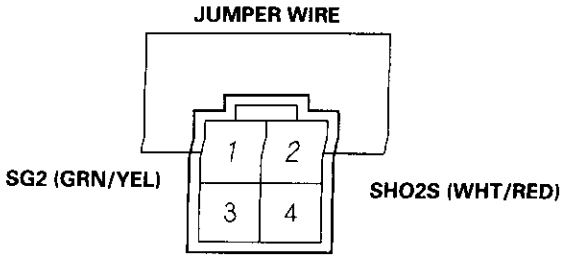


Terminal side of male terminals

7. Turn the ignition switch ON (II).
8. Check the secondary HO2S (Sensor 2) output voltage with the scan tool.

   *Is there 0.6 V or more?*

   **YES** – Go to step 9.

   **NO** – Replace the secondary HO2S (Sensor 2). ■
9. Turn the ignition switch OFF.
10. Connect ECM connector terminals C15 and C18 with a jumper wire.

**ECM CONNECTOR C (31P)**

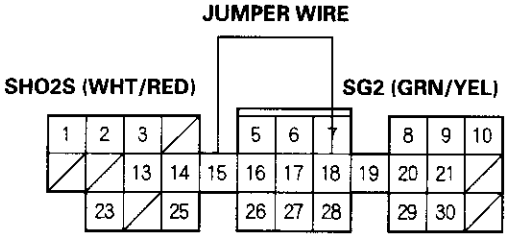


Wire side of female terminals

11. Turn the ignition switch ON (II).
12. Check the secondary HO2S (Sensor 2) output voltage with the scan tool.

    *Is there 0.6 V or more?*

    **YES** – Substitute a known-good ECM and recheck (see page 11-5). If the symptom/indication goes away, replace the original ECM. ■

    **NO** – Repair open in the wire between the ECM (C15, C18) and the secondary HO2S (Sensor 2). ■

## DTC Troubleshooting (cont'd)

### **DTC P0139:** Secondary HO2S (Sensor 2) Slow Response

1. Reset the ECM (see page 11-4).
2. Start the engine. Hold the engine at 3,000 rpm with no load (in neutral) until the radiator fan comes on.
3. Check the secondary HO2S (Sensor 2) output voltage at 3,000 rpm with the scan tool.

   *Does the voltage stay within 0.3–0.6 V for 2 minutes?*

   **YES**—Replace the secondary HO2S (Sensor 2).■

   **NO**—Intermittent failure, system is OK at this time. Check for poor connections or loose terminals at the secondary HO2S (Sensor 2) and at the ECM.■

## **DTC P0135:** Primary HO2S (Sensor 1) Heater Circuit Malfunction

## **DTC P0141:** Secondary HO2S(Sensor 2) Heater Circuit Malfunction

NOTE: Information marked with an asterisk ( * ) applies to DTC P0141.

1. Reset the ECM (see page 11-4).
2. Start the engine.

   *Is DTC P0135 or P0141 indicated?*

   **YES** – Go to step 3.

   **NO** – Intermittent failure, system is OK at this time. Check for poor connections or loose terminals at the primary HO2S (Sensor 1) or secondary HO2S (Sensor 2) and at the ECM. ■
3. Turn the ignition switch OFF.
4. Disconnect the HO2S (primary or secondary * ) (Sensor 1 or Sensor 2 * ) 4P connector.
5. At the HO2S side, measure resistance between HO2S 4P connector terminals No. 3 and No. 4.

**PRIMARY HO2S (Sensor 1) 4P CONNECTOR** | **SECONDARY HO2S (Sensor 2) 4P CONNECTOR***

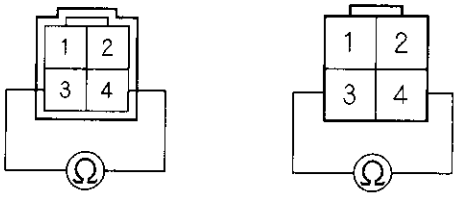


Terminal side of male terminals | Wire side of female terminals

*Is there about 3.3 Ω (12 – 14.3 Ω)* ?*

**YES** – Go to step 6.

**NO** – Replace the primary HO2S (Sensor 1) or secondary HO2S (Sensor 2) * . ■

6. At the HO2S side, check continuity between body ground and HO2S 4P connector terminals No. 3 and No. 4 individually.

**PRIMARY HO2S (Sensor 1) 4P CONNECTOR** | **SECONDARY HO2S (Sensor 2) 4P CONNECTOR***

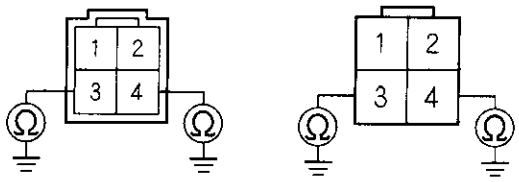


Terminal side of male terminals | Wire side of female terminals

*Is there continuity?*

**YES** – Replace the HO2S (primary or secondary * ) (Sensor 1 or Sensor 2 * ). ■

**NO** – Go to step 7.

7. Turn the ignition switch ON (II).
8. Measure voltage between HO2S 4P connector terminal No. 3 and No. 4.

**PRIMARY HO2S (Sensor 1) 4P CONNECTOR** | **SECONDARY HO2S (Sensor 2) 4P CONNECTOR***

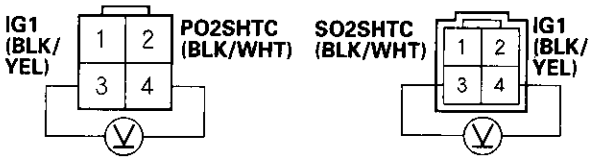


Wire side of female terminals | Terminal side of male terminals

*Is there battery voltage?*

**YES** – Go to step 9.

**NO** – Go to step 13.

(cont'd)

## DTC Troubleshooting (cont'd)

9. Turn the ignition switch OFF.
10. Disconnect ECM connector C (31P).
11. Check for continuity between the connector terminal C1 (C11) * and body ground.

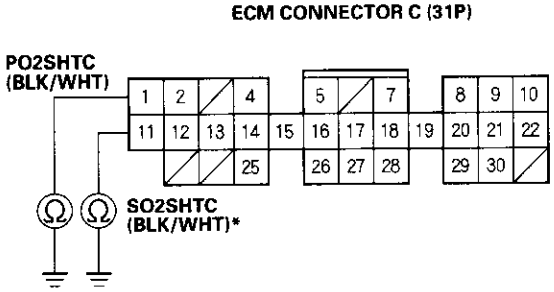


*Is there continuity?*

**YES** – Repair short in the wire between the ECM (C1, C11 * ) and HO2S (primary or secondary * ) (Sensor 1, Sensor 2 * ). ■

**NO** – Substitute a known-good ECM and recheck (see page 11-5). If the symptom/indication goes away, replace the original ECM. ■

12. Measure voltage between primary HO2S 4P connector terminal No. 3 (secondary HO2S No. 4) * and body ground.

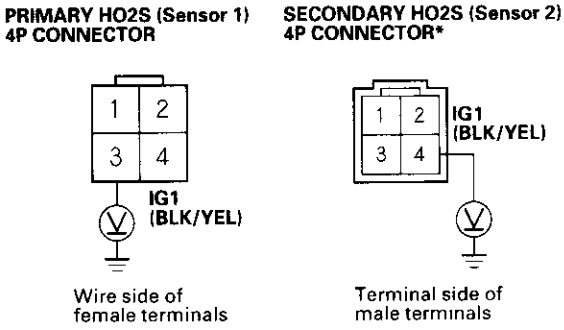


*Is there battery voltage?*

**YES** – Go to step 13.

**NO** – Repair open in the wire between the primary HO2S (Sensor 1), secondary HO2S (Sensor 2) * and No. 6 ACG (15 A) fuse. ■

13. Turn the ignition switch OFF.
14. Reconnect the HO2S 4P connector.
15. Disconnect the ECM connector C (31P).
16. Turn the ignition switch ON (II).
17. Measure voltage between ECM connector terminals B2 and C1 (B2 and C11) * .

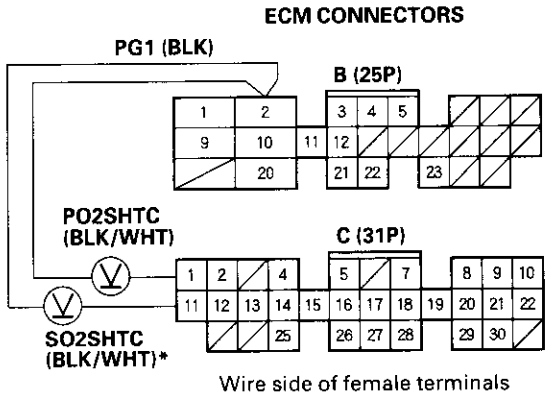


*Is there 0.1 V or less?*

**YES** – Repair open in the wire between the ECM (C1 and C11) * and the HO2S (primary or secondary * ) (Sensor 1, Sensor 2 * ). ■

**NO** – Substitute a known-good ECM and recheck (see page 11-5). If the symptom/indication goes away, replace the original ECM. ■

## **DTC P0171:** Fuel System Too Lean

## **DTC P0172:** Fuel System Too Rich

NOTE: If some of the DTCs listed below are stored at the same time as DTC P0171 and/or P0172, troubleshoot those DTCs first, then recheck for P0171 and/or P0172.

P0107, P0108, P1128, P1129: Manifold Absolute Pressure (MAP) Sensor
P0135: Primary Heated Oxygen Sensor (primary HO2S) (Sensor 1) Heater
P0137, P0138: Secondary HO2S (Sensor 2)
P0141: Secondary HO2S (Sensor 2) Heater
P1259: VTEC System

1. Check the fuel pressure (see page 11-105).

   *Is fuel pressure OK?*

   **YES**—Go to step 2.

   **NO**—Check these items:

   - If the pressure is too high. Check the fuel pressure regulator, and the fuel return pipe.■
   - If the pressure is too low. Check the fuel pump, the fuel feed pipe, the fuel filter, and the fuel pressure regulator.■

2. Start the engine. Hold the engine at 3,000 rpm with no load (in neutral) until the radiator fan comes on.

3. Check the primary HO2S (Sensor 1) output with the scan tool.

   *Does it stay less than 0.3 V or more than 0.6 V?*

   **YES**—Replace the primary HO2S (Sensor 1).■

   **NO** Go to step 4.

4. Turn the ignition switch OFF.

5. With a vacuum pump, apply vacuum to the EVAP canister purge valve from the intake manifold side.

   *Does it hold vacuum?*

   **YES**—Check the valve clearances and adjust if necessary. If the valve clearances are OK, replace the fuel injectors.■

   **NO**—Replace the EVAP canister purge valve.■

## DTC Troubleshooting (cont'd)

**DTC P0300:** Random Misfire and Any Combination of the Following:

**DTC P0301:** No. 1 Cylinder Misfire

**DTC P0302:** No. 2 Cylinder Misfire

**DTC P0303:** No. 3 Cylinder Misfire

**DTC P0304:** No. 4 Cylinder Misfire

NOTE:
- If the misfiring is frequent enough to trigger detection of increased emissions during two consecutive driving cycles, the MIL will come on, and DTC P0300 (and some combination of P0301 through P0304) will be stored.
- If the misfiring is frequent enough to damage the catalyst, the MIL will blink whenever the misfiring occurs, and DTC P0300 (and some combination of P0301 through P0304) will be stored. When the misfiring stops, the MIL will remain on.

1. Troubleshoot the following DTCs first if any of them were stored along with the random misfire DTC(s):
   P0107, P0108, P1128, P1129: Manifold Absolute Pressure (MAP) Sensor (see page 11-52)
   P0131, P0132: Primary Heated Oxygen Sensor (primary HO2S) (see page 11-65)
   P0171, P0172: Fuel Metering (see page 11-65)
   P0335, P0336: Crankshaft Position (CKP) Sensor (see page 11-81)
   P0505: Idle Control System (see page 11-100)
   P1259: VTEC System (see page 6-6)
   P1361, P1362, P1366, P1367: Camshaft Position (CMP) Sensor (Top Dead Center (TDC) Sensor) A/B (see page 11-91)
   P1519: Idle Air Control (IAC) Valve (see page 11-102)

2. Test-drive the vehicle to verify the symptom.

3. Find the symptom in the chart below, and do the related procedures in the order listed until you find the cause.

| Symptom | Procedure(s) | Also check for: |
|---|---|---|
| Random misfire only at low RPM and load | Check fuel pressure (see page 11-105). | • Low compression.<br>• Low quality fuel. |
| Random misfire only during acceleration | Check fuel pressure (see page 11-105). | Malfunction in the VTEC system (see page 6-6). |
| Random misfire at high RPM and load, or under random conditions | Check fuel pressure (see page 11-105). | Correct valve clearance (see page 6-6). |

**DTC P0301:** No. 1 Cylinder Misfire

**DTC P0302:** No. 2 Cylinder Misfire

**DTC P0303:** No. 3 Cylinder Misfire

**DTC P0304:** No. 4 Cylinder Misfire

1. *After checking and recording the freeze data, reset* the ECM (see page 11-4). If there is no freeze data of the misfire, just clear the DTC.
2. Start the engine, listen for a clicking sound at the injector at the problem cylinder.

   *Does it click?*

   **YES** – Go to step 3.

   **NO** – Go to step 30.
3. Turn the ignition switch OFF.
4. Exchange the ignition coil from the problem cylinder with one from another cylinder.
5. Test-drive the vehicle several times in the range of the freeze data or under various conditions if there was no freeze data.
6. Check for a DTC or Temporary DTC with the scan tool.

   *Is DTC P0301, P0302, P0303 or P0304, or Temporary DTC P1399 indicated?*

   **YES** – Go to step 7.

   **NO** – Intermittent misfire due to poor contact at the ignition coil connector (no misfire at this time).■
7. Determine which cylinder(s) had the misfire.

   *Does the misfire occur in the other cylinder where the ignition coil was exchanged?*

   **YES** - Replace the faulty ignition coil.■

   **NO** – Go to step 8.
8. Turn the ignition switch OFF.
9. Exchange the spark plug from the problem cylinder with one from another cylinder.
10. Test-drive the vehicle several times in the range of the freeze data or under various conditions if there was no freeze data.
11. Check for DTC or Temporary DTC with a scan tool.

    *Is DTC P0301, P0302, P0303 or P0304, or Temporary DTC P1399 indicated?*

    **YES** – Go to step 12.

    **NO** – Intermittent misfire due to spark plug fouling, etc. (no misfire at this time).■
12. Determine which cylinder had the misfire.

    *Does the misfire occur in the other cylinder where the spark plug was exchanged?*

    **YES** – Replace the faulty spark plug.■

    **NO** – Go to step 13.
13. Turn the ignition switch OFF.
14. Exchange the injector from the problem cylinder with one from the another cylinder.
15. Let the engine idle for 2 minutes.
16. Test-drive the vehicle several times in the range of the freeze data or under various conditions if there was no freeze data.

(cont'd)

## DTC Troubleshooting (cont'd)

17. Check for a DTC or Temporary DTC with the scan tool.

    *Is DTC P0301, P0302, P0303 or P0304, or Temporary DTC P1399 indicated?*

    **YES** – Go to step 18.

    **NO** – Intermittent misfire due to bad contact in the injector connector (no misfire at this time).■

18. Determine which cylinder had the misfire.

    *Does the misfire occur in the other cylinder where the injector was exchanged?*

    **YES** – Replace the faulty injector (see page 11-87).■

    **NO** – Go to step 19.

19. Turn the ignition switch OFF.

20. Disconnect the ignition coil 3P connector from the problem cylinder.

21. Turn the ignition switch ON (II).

22. Measure voltage between ignition coil 3P connector terminal No. 3 and body ground.

**IGNITION COIL 3P CONNECTOR**

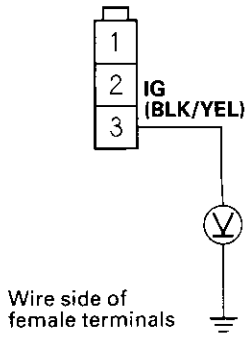


*Is there battery voltage?*

**YES** – Go to step 23.

**NO** – Repair open in the wire between the No. 4 COIL (15A) fuse and the ignition coil.■

23. Turn the ignition switch OFF.

24. Check for continuity between ignition coil 3P connector terminal No. 2 and body ground.

**IGNITION COIL 3P CONNECTOR**

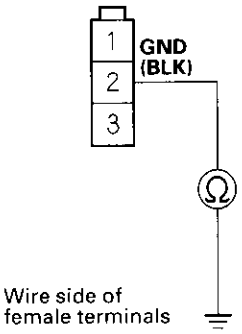


*Is there continuity?*

**YES** – Go to step 25.

**NO** – Repair open in the wire between the ignition coil and G101.■

25. Disconnect ECM connector C (31P).

26. Check for continuity between body ground and the ECM connector terminal (see table).

ECM CONNECTOR C (31P)

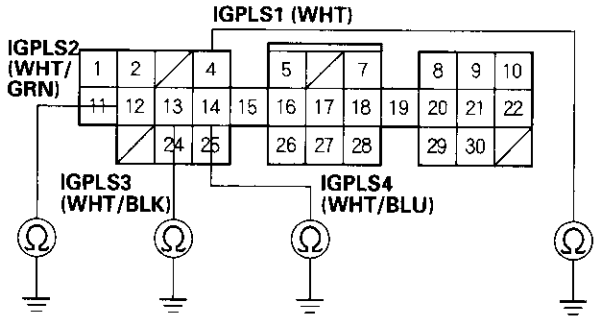


Wire side of female terminals

| PROBLEM CYLINDER | DTC | ECM TERMINAL | WIRE COLOR |
|---|---|---|---|
| No. 1 | P0301 | C4 | WHT |
| No. 2 | P0302 | C12 | WHT/GRN |
| No. 3 | P0303 | C13 | WHT/BLK |
| No. 4 | P0304 | C14 | WHT/BLU |

*Is there continuity?*

**YES** – Repair short in the wire between the ECM and the ignition coil. ■

**NO** – Go to step 27.

27. Connect the appropriate ignition coil 3P connector terminal No. 1 to body ground with a jumper wire (see table).

IGNITION COIL 3P CONNECTOR

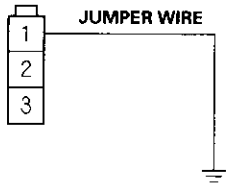


Wire side of female terminals

| PROBLEM CYLINDER | DTC | WIRE COLOR |
|---|---|---|
| No. 1 | P0301 | WHT |
| No. 2 | P0302 | WHT/GRN |
| No. 3 | P0303 | WHT/BLK |
| No. 4 | P0304 | WHT/BLU |

28. Check for continuity between body ground and the ECM connector terminal (see table).

ECM CONNECTOR C (31P)

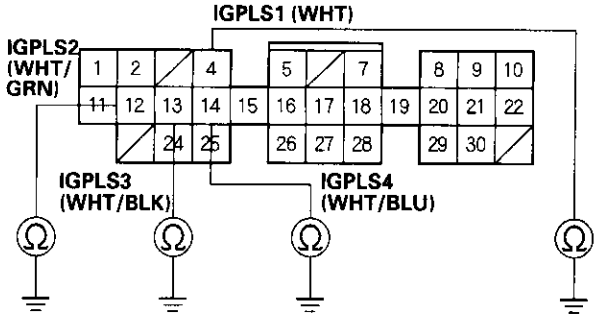


Wire side of female terminals

| PROBLEM CYLINDER | DTC | ECM TERMINAL | WIRE COLOR |
|---|---|---|---|
| No. 1 | P0301 | C4 | WHT |
| No. 2 | P0302 | C12 | WHT/GRN |
| No. 3 | P0303 | C13 | WHT/BLK |
| No. 4 | P0304 | C14 | WHT/BLU |

*Is there continuity?*

**YES** – Go to step 29.

**NO** – Repair open in the wire between the ECM and the ignition coil. ■

(cont'd)

## DTC Troubleshooting (cont'd)

29. Check the engine compression (see page 6-32).

    *Is the engine compression OK?*

    **YES** – Substitute a known-good ECM and recheck (see page 11-5). If the symptom/indication goes away, replace the original ECM.■

    **NO** – Repair the engine.■

30. Turn the ignition switch OFF.

31. Disconnect ECM connector B (25P).

32. Turn the ignition switch ON (II).

33. Measure voltage between body ground and the ECM connector terminal (see table).

**ECM CONNECTOR B (25P)**

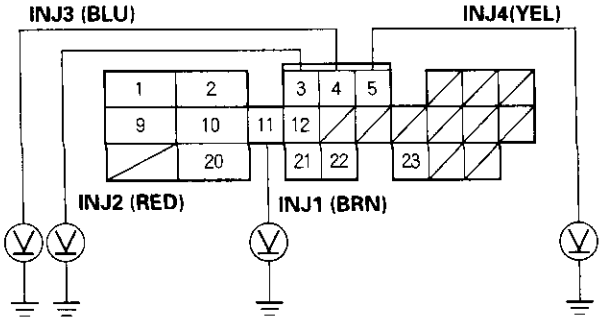


Wire side of female terminals

| PROBLEM CYLINDER | DTC | ECM TERMINAL | WIRE COLOR |
|---|---|---|---|
| No. 1 | P0301 | B11 | BRN |
| No. 2 | P0302 | B3 | RED |
| No. 3 | P0303 | B4 | BLU |
| No. 4 | P0304 | B5 | YEL |

*Is there battery voltage?*

**YES** – Go to step 34.

**NO** – Go to step 42.

34. Turn the ignition switch OFF.

35. Disconnect the injector 2P connector from the problem cylinder.

36. Measure resistance between injector 2P connector terminals No. 1 and No. 2.

**INJECTOR 2P CONNECTOR**

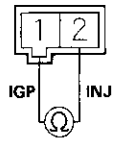


Terminal side of male terminals

*Is there 10 Ω – 13 Ω?*

**YES** – Go to step 37.
**NO** – Replace the injector (see page 11-87).■

37. Exchange the injector from the problem cylinder with one from another cylinder.

38. Let the engine idle for 2 minutes.

39. Test-drive the vehicle several times in the range of the freeze data or under various conditions if there was no freeze data.

40. Check for a DTC or Temporary DTC with the scan tool.

    *Is DTC P0301, P0302, P0303 or P0304, or Temporary DTC P1399 indicated?*

    **YES** – *Go to step 41.*
    **NO** – Intermittent misfire due to injector malfunction, etc.■

41. Determine which cylinder had the misfire.

    *Does the misfire occur in the other cylinder where the injector was exchanged?*

    **YES** – Replace the faulty injector.■
    **NO** – Substitute a known-good ECM and recheck (see page 11-5). If the symptom/indication goes away, replace the original ECM.■

42. Turn the ignition switch OFF.

43. Disconnect the injector 2P connector from the problem cylinder.

44. Turn the ignition switch ON (II).

45. Measure voltage between injector 2P connector terminal No. 2 and body ground.

**INJECTOR 2P CONNECTOR**

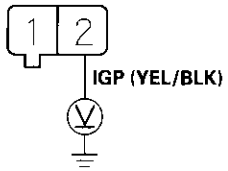


Wire side of female terminals

*Is there battery voltage?*

**YES** – Go to step 46.

**NO** – Repair open in the wire between the injector and the PGM-FI main relay.■

46. Turn the ignition switch OFF.

47. Check for continuity between body ground and the ECM connector terminal (see table).

**ECM CONNECTOR B (25P)**

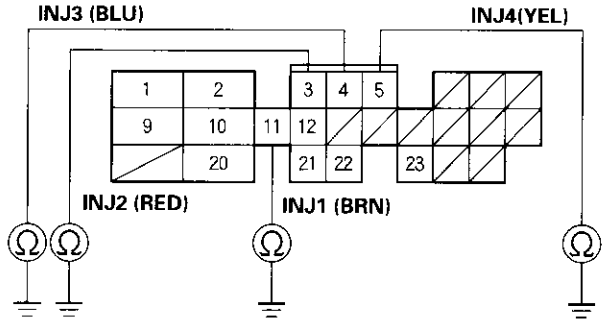


Wire side of female terminals

| PROBLEM CYLINDER | DTC | ECM TERMINAL | WIRE COLOR |
|---|---|---|---|
| No. 1 | P0301 | B11 | BRN |
| No. 2 | P0302 | B3 | RED |
| No. 3 | P0303 | B4 | BLU |
| No. 4 | P0304 | B5 | YEL |

*Is there continuity?*

**YES** Repair short in the wire between the ECM and the injector.■

**NO** – Go to step 48.

48. Connect injector 2P connector terminal No. 1 to body ground with a jumper wire (see table).

**INJECTOR 2P CONNECTOR**

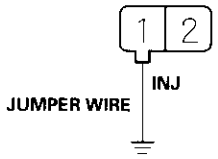


Wire side of female terminals

| PROBLEM CYLINDER | DTC | WIRE COLOR |
|---|---|---|
| No. 1 | P0301 | BRN |
| No. 2 | P0302 | RED |
| No. 3 | P0303 | BLU |
| No. 4 | P0304 | YEL |

49. Check for continuity between body ground and the ECM connector terminals (see table).

**ECM CONNECTOR B (25P)**

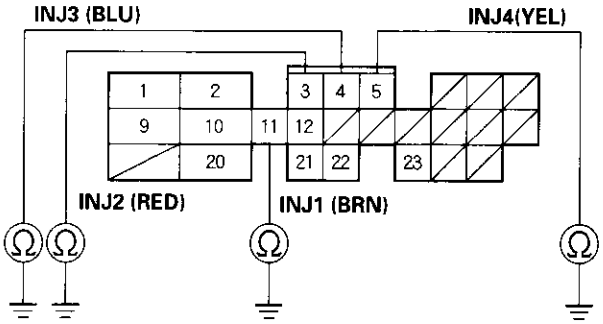


Wire side of female terminals

| PROBLEM CYLINDER | DTC | ECM TERMINAL | WIRE COLOR |
|---|---|---|---|
| No. 1 | P0301 | B11 | BRN |
| No. 2 | P0302 | B3 | RED |
| No. 3 | P0303 | B4 | BLU |
| No. 4 | P0304 | B5 | YEL |

*Is there continuity?*

**YES** – Replace the injector, then recheck.■

**NO** – Repair open in the wire between the ECM and the injector.■

## DTC Troubleshooting (cont'd)

### DTC P0325: Knock Sensor Circuit Malfunction

1. Reset the ECM (see page 11-4).
2. Start the engine. Hold the engine at 3,000 rpm with no load (in neutral) until the radiator fan comes on, then let it idle.
3. Hold the engine at 3,000 – 4,000 rpm for 10 seconds.

   *Is DTC P0325 indicated?*

   **YES** – Go to step 4.

   **NO** – Intermittent failure, system is OK at this time. Check for poor connections or loose terminals at the knock sensor and at the ECM. ■
4. Turn the ignition switch OFF.
5. From under neath the vehicle, reach above the front of the starter motor, and disconnect the knock sensor 1P connector.
6. Disconnect ECM connector C (31P), then check for continuity between ECM connector terminals C22 and body ground.

**ECM CONNECTOR C (31P)**

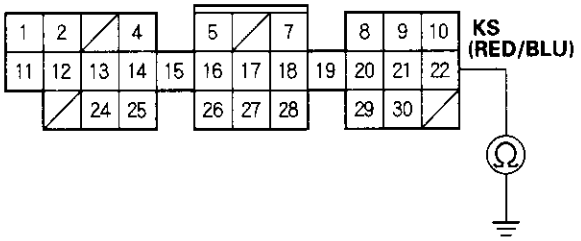


Wire side of female terminals

*Is there continuity?*

**YES** – Repair short in the wire between ECM (C22) and the knock sensor. ■

**NO** – Go to step 7.

7. Connect knock sensor connector terminal No. 1 to body ground with a jumper wire.

**KNOCK SENSOR 1P CONNECTOR**

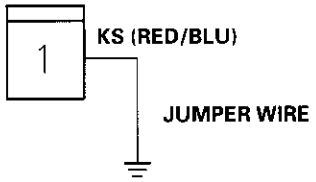


Wire side of female terminals

8. Check for continuity between ECM connector terminal C22 and body ground.

**ECM CONNECTOR C (31P)**

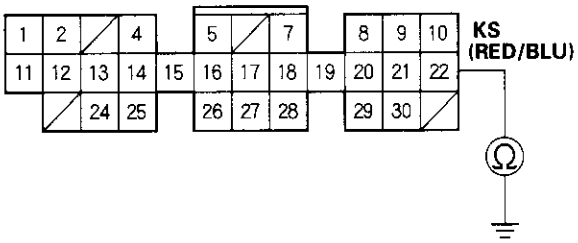


Wire side of female terminals

*Is there continuity ?*

**YES** – Go to step 9.

**NO** – Repair open in the wire between the ECM (C22) and the knock sensor. ■

9. Substitute a known-good knock sensor and recheck.

   *Is DTC P0325 indicated?*

   **YES** – Substitute a known-good ECM and recheck (see page 11-5). If symptom/indication goes away, replace the original ECM. ■

   **NO** – Replace the original knock sensor. ■

**DTC P1361:** *CMP (TDC) Sensor A Intermittent* Interruption

**DTC P1362:** CMP (TDC) Sensor A No Signal

**DTC P1366:** CMP (TDC) Sensor B Intermittent Interruption

**DTC P1367:** CMP (TDC) Sensor B No Signal

NOTE: Information marked with an asterisk ( * ) applies to DTC P1366 or DTC P1367.

1. Reset the ECM (see page 11-4).
2. Start the engine.

   *Is DTC P1361, P1362, P1366 and/or P1367 indicated?*

   **YES** – Go to step 3.

   **NO** – Intermittent failure, system is OK at this time. Check for poor connections or loose terminals at CMP (TDC) sensor A, CMP (TDC) sensor B * and at the ECM. ■
3. Turn the ignition switch OFF.
4. Disconnect the CMP (TDC) sensor A and CMP (TDC) sensor B * 2P connectors.
5. Measure resistance between CMP (TDC) sensor 2P connector terminals No. 1 and No. 2.

**CMP (TDC) SENSOR A 2P CONNECTOR**
**CMP (TDC) SENSOR B 2P CONNECTOR***

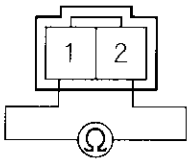


Terminal side of male terminals

*Is there 1,850 – 2,450 Ω ?*

**YES** – Go to step 6.

**NO** – Replace the CMP (TDC) sensor A and/or CMP (TDC) sensor B * (see page 6-3). ■

6. *Check for continuity to body ground on all* terminals individually.

**CMP (TDC) SENSOR A 2P CONNECTOR**
**CMP (TDC) SENSOR B 2P CONNECTOR***

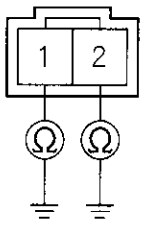


Terminal side of male terminals

*Is there continuity?*

**YES** – Replace the CMP (TDC) sensor A and/or CMP (TDC) sensor B * (see page 6-3). ■

**NO** – Go to step 7.

(cont'd)

## DTC Troubleshooting (cont'd)

7. Reconnect CMP (TDC) sensor A and CMP (TDC) sensor B * 2P connectors.

8. Disconnect ECM connector C (31P).

9. Measure resistance between ECM connector terminals C20 and C21 (C29 and C30) * .

**ECM CONNECTOR C (31P)**

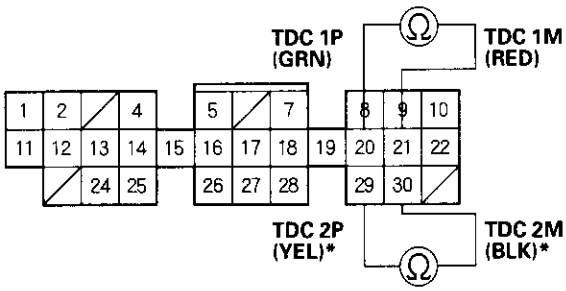


Wire side of female terminals

*Is there 1,850–2,450 Ω ?*

**YES** – Go to step 10.

**NO** – Repair open or short in the faulty sensor wire(s). ■

10. Check for continuity between body ground and ECM connector teminal C20 (C29) * .

**ECM CONNECTOR C (31P)**

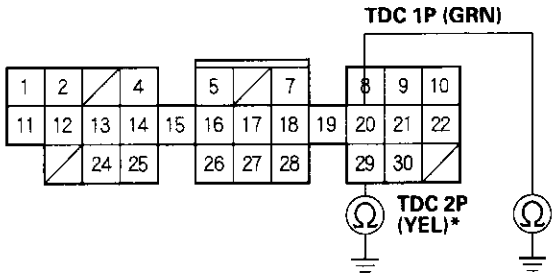


Wire side of female terminals

*Is there continuity?*

**YES** – Repair short to body ground in the faulty sensor wire(s). ■

**NO** – Substitute a known-good ECM and recheck (see page 11-5). If the symptom/indication goes away, replace the original ECM. ■

## **DTC P0335:** CKP Sensor No Signal

## **DTC P0336:** CKP Sensor Intermittent Interruption

1. Reset the ECM (see page 11-4).
2. Start the engine.

   *Is DTC P0335 and/or P0336 indicated?*

   **YES** – Go to step 3.

   **NO** – Intermittent failure, system is OK at this time. Check for poor connections or loose terminals at the CKP sensor and at the ECM. ■
3. Turn the ignition switch OFF.
4. Disconnect the CKP sensor 3P connector, and measure resistance between CKP sensor 3P connector terminals No. 1 and No. 2.

**CKP SENSOR 3P CONNECTOR**

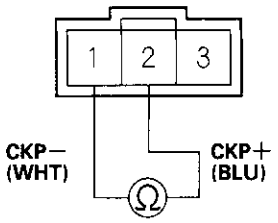


Terminal side of male terminals

*Is there 1,850–2,450 Ω ?*

**YES** – Go to step 5.

**NO** – Replace the CKP sensor (see page 6-3). ■

5. Check for continuity between CKP sensor 3P connector terminal No. 1 and body ground and terminal No. 2 and body ground individually.

**CKP SENSOR 3P CONNECTOR**

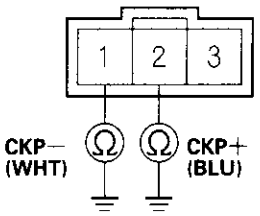


Terminal side of male terminals

*Is there continuity?*

**YES** – Replace the CKP sensor (see page 6-3). ■

**NO** – Go to step 6.

6. Reconnect the CKP sensor 3P connector.
7. Disconnect ECM connector C (31P), and measure resistance between the ECM connector terminals C8 and C9.

**ECM CONNECTOR C (31P)**

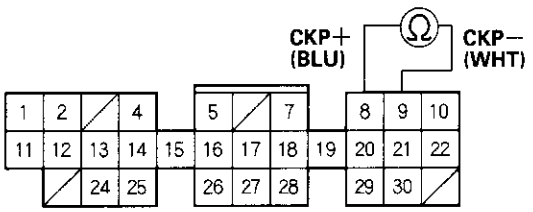


Wire side of female terminals

*Is there 1,850–2,450 Ω ?*

**YES** – Go to step 8.

**NO** – Repair open in the wire between the ECM (C8, C9) and CKP sensor. ■

(cont'd)

## DTC Troubleshooting (cont'd)

8. Check for continuity between ECM connector terminal C8 and body ground.

**ECM CONNECTOR C (31P)**

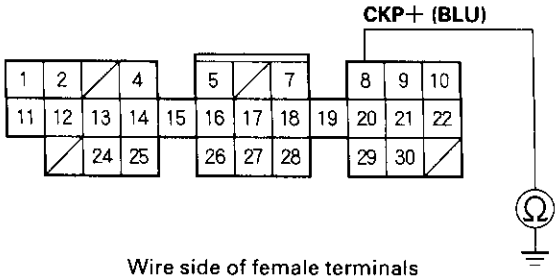


Wire side of female terminals

*Is there continuity?*

**YES** – Repair short in the wire between ECM terminal C8 and the CKP sensor. ■

**NO** – Substitute a known-good ECM and recheck (see page 11-5). If the symptom/indication goes away, replace the original ECM. ■

## **DTC P0500:** VSS Circuit Malfunction

1. Reset the ECM (see page 11-4).
2. Start the engine. Hold the engine at 3,000 rpm with no load (in neutral) until the radiator fan comes on, then let it idle.
3. Test-drive with the transmission in 2nd gear accelerate to 4,000 rpm, then decelerate to 1,500 rpm with the throttle fully closed for at least 5 seconds.
4. Check for a DTC with the scan tool.

   *Is DTC P0500 indicated?*

   **YES** – Go to step 5.

   **NO** – Intermittent failure, system is OK at this time. Check for poor connections or loose terminals between the VSS and at the ECM. ■
5. Turn the ignition switch OFF.
6. Raise the vehicle.
7. Disconnect the VSS 3P connector.
8. Turn the ignition switch ON (II).
9. Measure voltage between VSS 3P connector terminal No. 1 and body ground.

**VSS 3P CONNECTOR**

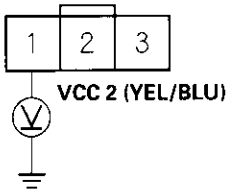


Wire side of female terminals

*Is there about 5 V?*

**YES** – Go to step 11.

**NO** – Go to step 10.

10. Measure voltage between ECM connector terminal C28 and body ground.

**ECM CONNECTOR C (31P)**

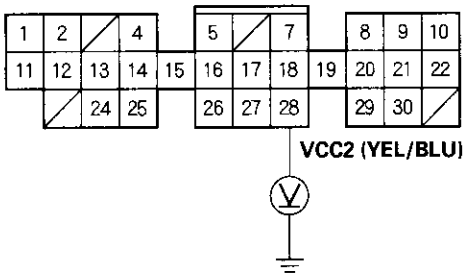


Wire side of female terminals

*Is there about 5 V?*

**YES** – Repair open in the wire between the ECM (C28) and VSS. ■

**NO** – Substitute a known-good ECM and recheck (see page 11-5). If the symptom/indication goes away, replace the original ECM. ■

11. Measure voltage between the VSS 3P connector terminals No. 1 and No. 3.

**VSS 3P CONNECTOR**

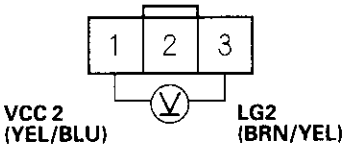


Wire side of female terminals

*Is there about 5 V?*

**YES** – Go to step 12.

**NO** – Repair open in the wire between the ECM (B20, B22) and the VSS. ■

(cont'd)

## DTC Troubleshooting (cont'd)

12. Turn the ignition switch OFF.
13. Reconnect the VSS 3P connector.
14. Turn the ignition switch ON (II).
15. Raise the rear of the vehicle, and make sure it's securely supported. Hold one wheel, and slowly rotate the other.
16. Measure voltage between ECM connector terminals A9 and B20.

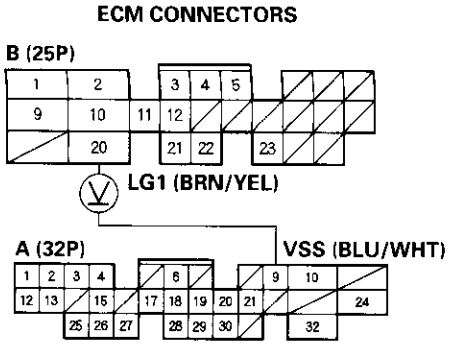


Wire side of female terminals

*Does voltage pulse between 0 V and about 5 V?*

**YES** – Substitute a known-good ECM and recheck (see page 11-5). If the symptom/indication goes away, replace the original ECM. ■

**NO** – Go to step 17.

17. Turn the ignition switch OFF.
18. Disconnect ECM connector A (32P).
19. Turn the ignition switch ON (II).
20. Hold one wheel, and slowly rotate the other.
21. Measure voltage between ECM connector terminals A9 and B20.

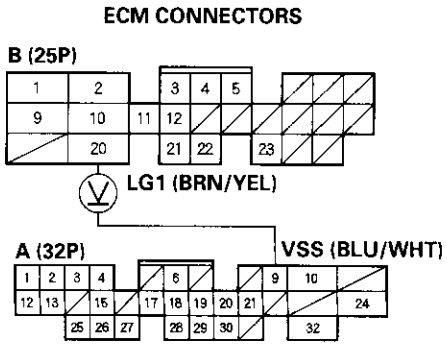


Wire side of female terminals

*Does voltage pulse between 0 V and about 5 V?*

**YES** – Substitute a known-good ECM and recheck (see page 11-5). If the symptom/indication goes away, replace the original ECM. ■

**NO** – Repair short or open in the wire between the VSS and the ECM, if the wire is OK, replace the VSS (see page 22-52). ■

## **DTC P1106:** BARO Sensor Range/Perfomance Problem

1. Reset the ECM (see page 11-4).
2. Start the engine. Hold the engine at 3,000 rpm with no load (in neutral) until the radiator fan comes on, then let it idle.
3. Test-drive with the transmission in 4th gear.
4. Accelerate for 5 seconds using wide open throttle.
5. Check for a Temporary DTC with the scan tool.

   *Is Temporary DTC P1106 indicated?*

   **YES**—Substitute a known-good ECM and recheck (see page 11-5). If the symptom/indication goes away, replace the original ECM.■

   **NO**—Intermittent failure, system is OK at this time.■

## **DTC P1107:** BARO Sensor Circuit Low Voltage

## **DTC P1108:** BARO Sensor Circuit High Voltage

1. Reset the ECM (see page 11-4).
2. Turn the ignition switch ON (II).

   *Is DTC P1107 or P1108 indicated?*

   **YES**—Substitute a known-good ECM and recheck (see page 11-5). If the symptom/indication goes away, replace the original ECM.■

   **NO**—Intermittent failure, system is OK at this time.■

## DTC Troubleshooting (cont'd)

### DTC P1297: ELD Circuit Low Voltage

1. Reset the ECM (see page 11-4).
2. Start the engine.
3. Turn on the headlights.

   *Is DTC P1297 indicated?*

   **YES** – Go to step 4.

   **NO** – Intermittent failure, system is OK at this time. Check for poor connections or loose terminals at the ELD and at the ECM. ■
4. Turn the ignition switch and headlights OFF.
5. Disconnect the ELD 3P connector.
6. Turn the ignition switch ON (II).
7. Measure voltage between ELD 3P connector terminal No. 3 and body ground.

**ELD 3P CONNECTOR**

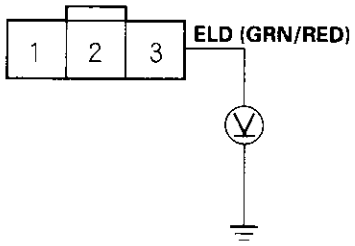


Wire side of female terminals

*Is there about 5 V?*

**YES** – Replace the ELD. ■

**NO** – Go to step 8.

8. Turn the ignition switch OFF.
9. Disconnect ECM connector A (32P).
10. Check for continuity between ECM connector terminal A30 and body ground.

**ECM CONNECTOR A (32P)**

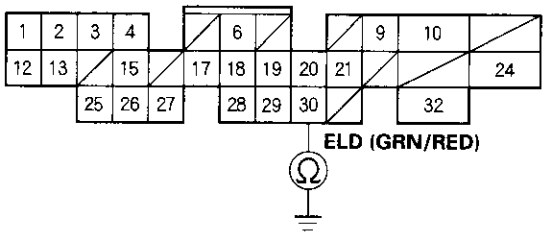


Wire side of female terminals

*Is there continuity?*

**YES** – Repair short in the wire between the ECM (A30) and the ELD. ■

**NO** – Substitute a known-good ECM and recheck (see page 11-5). If the symptom/indication goes away, replace the original ECM. ■

## **DTC P1298:** ELD Circuit High Voltage

1. Reset the ECM (see page 11-4).
2. Start the engine.
3. Turn on the headlights.

   *Is DTC P1298 indicated?*

   **YES**—Go to step 4.

   **NO**—Intermittent failure, system is OK at this time. Check for poor connections or loose terminals at the ELD and at the ECM.■

4. Turn the ignition switch and headlights OFF.
5. Disconnect the ELD 3P connector.
6. Turn the ignition switch ON (II).
7. Measure voltage between ELD 3P connector terminal No. 1 and body ground.

**ELD 3P CONNECTOR**

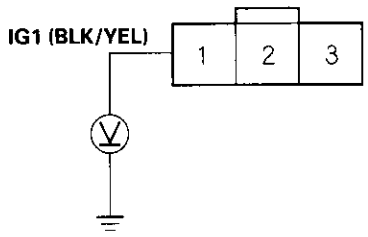


Wire side of female terminals

*Is there battery voltage?*

**YES** Go to step 8.

**NO** Repair open in the wire between the No. 6 ACG (15 A) fuse and the ELD.■

8. Turn the ignition switch OFF.
9. Connect ELD 3P connector terminal No. 3 to body ground with a jumper wire.

**ELD 3P CONNECTOR**

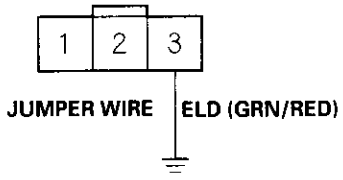


Wire side of female terminals

10. Disconnect ECM connector A (32P).
11. Check for continuity between the ECM connector terminal (A30) and body ground.

**ECM CONNECTOR A (32P)**

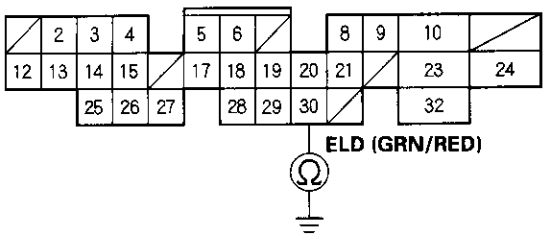


Wire side of female terminals

*Is there continuity?*

**YES**—Go to step 12.

**NO**—Repair open in the wire between the ECM (A30) and the ELD.■

(cont'd)

## DTC Troubleshooting (cont'd)

12. Check for continuity between ELD 3P connector terminal No. 2 and body ground.

**ELD 3P CONNECTOR**

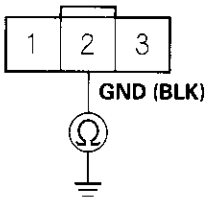


Wire side of female terminals

*Is there continuity?*

**YES** – Go to step 13.

**NO** – Repair open in the wire between ELD connector terminal No. 2 and G201. ■

13. Reconnect the ELD 3P connector and ECM connector A (32P).

14. Start the engine and let it idle.

15. While measuring voltage between ECM connector terminals A30 and B20, turn the headlights on (low).

**ECM CONNECTORS**

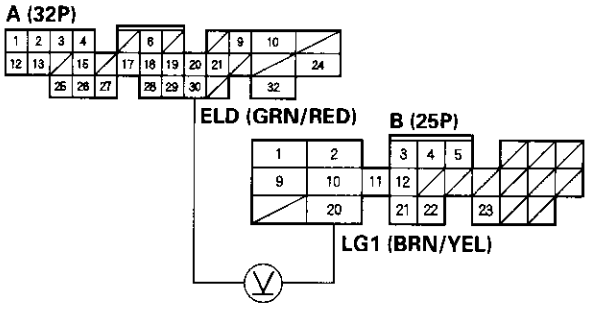


Wire side of female terminals

*Does the voltage drop?*

**YES** – Substitute a known-good ECM and recheck (see page 11-5). If the symptom/indication goes away, replace the original ECM. ■

**NO** – Replace the ELD. ■

### DTC P1607: ECM Internal Circuit Malfunction

1. Reset the ECM (see page 11-4).

2. Turn the ignition switch ON (II).

3. Wait 30 seconds.

*Is DTC P1607 indicated?*

**YES** – Substitute a known-good ECM and recheck (see page 11-5). If the symptom/indication goes away, replace the original ECM. ■

**NO** – Go to step 4.

4. Turn the ignition switch OFF.

5. Turn the ignition switch ON (II).

6. Wait 10 seconds.

*Is DTC P1607 indicated?*

**YES** - Substitute a known-good ECM and recheck (see page 11-5). If the symptom/indication goes away, replace the original ECM. ■

**NO** – Intermittent failure, system is OK at this time. Ask the customer if the battery ever went dead. ■

## MIL Circuit Troubleshooting

1. Turn the ignition switch ON (II), and watch the Malfunction Indicator Lamp (MIL).

   *Does the MIL come on and stay on?*

   **YES** – If the MIL always come on and stays on, go to step 21. But if the MIL sometimes works normally, first check for these problems. ■

   - An intermittent short in the wire between the ECM (A10) and the data link connector (DLC).
   - An intermittent short in the wire between the ECM (A18) and the gauge assembly.

   **NO** – If the MIL is always off, go to step 2. But if the MIL sometimes works normally, first check for these problems. ■

   - A loose No. 5 INSTRUMENT LIGHT BACK UP LIGHT (7.5A) fuse in the under-dash fuse/relay box.
   - A loose ACG S (15A) fuse in the under-hood fuse/relay box.
   - A loose No. 2 FUEL PUMP SRS (15A) fuse in the under-dash fuse/relay box.
   - A poor connection at ECM terminal A18.
   - An intermittent open in the GRN/ORN wire between the ECM (A18) and the gauge assembly.
   - An intermittent short in the wire between the ECM (C19) and the MAP sensor.
   - An intermittent short in the wire between the ECM (C28) and TP sensor, vehicle speed sensor (VSS), air pump electric current sensor, or fuel tank pressure (FTP) sensor.
   - PGM-FI main relay.

2. Turn the ignition switch OFF and then ON (II) again.

   *Is the low oil pressure light on?*

   **YES** – Go to step 3.

   **NO** – Check for these problems. ■

   - A blown No. 5 INSTRUMENT LIGHT BACK UP LIGHT (7.5A) fuse in the under-dash fuse/relay box.
   - A short or open in the wire between No. 5 INSTRUMENT LIGHT BACK UP LIGHT (7.5A) fuse and the gauge assembly.

3. Try to start the engine.
   *Does the engine start?*

   **YES** – Go to step 4.

   **NO** – Go to step 7.

4. Turn the ignition switch OFF.

5. Connect ECM connector terminal A18 to body ground with a jumper wire.

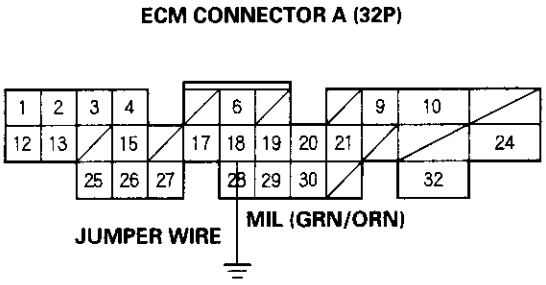


Wire side of female terminals

6. Turn the ignition switch ON (II).

   *Is the MIL on?*

   **YES** – Substitute a known-good ECM and recheck (see page 11-5). If the symptom/indication goes away, replace the original ECM. ■

   **NO** – Check for an open in the wires between the ECM (A18) and the gauge assembly. Also check for a blown MIL bulb. ■

(cont'd)

## MIL Circuit Troubleshooting (cont'd)

7. Turn the ignition switch OFF.

8. Inspect the ACG S (15A) fuse in the main under-hood fuse/relay box.

   *Is the fuse OK?*

   **YES** – Go to step 9.

   **NO** – Check for these problems. ■

   - A short in the wire between the ACG S (15A) fuse and the PGM-FI main relay.
   - A short in the wire between the PGM-FI main relay and the ECM, injectors, or IAC valve.

9. Inspect the No. 2 FUEL PUMP SRS (15A) fuse in the under-dash fuse/relay box.

   *Is the fuse OK?*

   **YES** – Go to step 10.

   **NO** – Check for these problems. ■

   - A short in the wire between the No. 2 FUEL PUMP SRS (15 A) fuse and the PGM-FI main relay or the SRS unit.
   - A short in the wire between the PGM-FI main relay and the fuel pump.
   - A faulty PGM-FI main relay or faulty fuel pump.

10. Disconnect ECM connector C (31P).

11. Check for continuity between body ground and ECM connector terminals C19 and C28 individually.

**ECM CONNECTOR C (31P)**

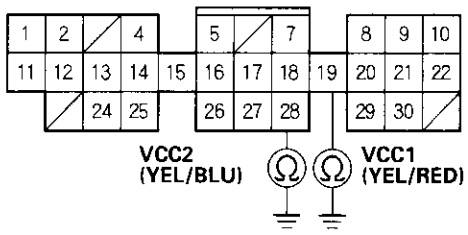


Wire side of female terminals

*Is there continuity?*

**YES** – Go to step 12.

**NO** - Go to step 13.

12. Disconnect the 3P connector from each of these sensors, one at a time, and check for continuity between body ground and ECM connector terminal C19 and C28 individually.

    - MAP sensor
    - Vehicle speed sensor (VSS)
    - Fuel tank pressure (FTP) sensor
    - TP sensor
    - Air pump electrical current sensor

    *Is there continuity?*

    **YES** – Repair short to body ground in the wire between the ECM (C19) and the MAP sensor, or the ECM (C28) and the TP sensor, VSS, FTP sensor or air pump electrical current sensor.

    **NO** – Replace the sensor that made continuity to body ground go away when disconnected. ■

13. Disconnect the injectors and IAC valve connectors.

14. Turn the ignition switch ON (II).

15. Measure voltage between body ground and ECM connector terminals B1 and B9 individually.

**ECM CONNECTOR B (25P)**

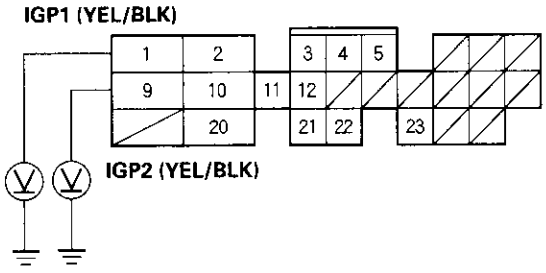


Wire side of female terminals

*Is there battery voltage?*

**YES** – Go to step 16.

**NO** – Check for these problems:

- An open in the wire(s) between the PGM-FI main relay and ECM connector terminals B1 and B9.
- Poor connections at the PGM-FI main relay.
- A faulty PGM-FI main relay (see page 11-102).

Repair or replace parts as needed.

16. Turn the ignition switch OFF.

17. Reconnect the connectors to the sensors, then reconnect ECM connector C (31P).

18. Turn the ignition switch ON (II).

19. Measure voltage between body ground and ECM connector terminals B2, B10, B20, and B22 individually.

**ECM CONNECTOR B (25P)**

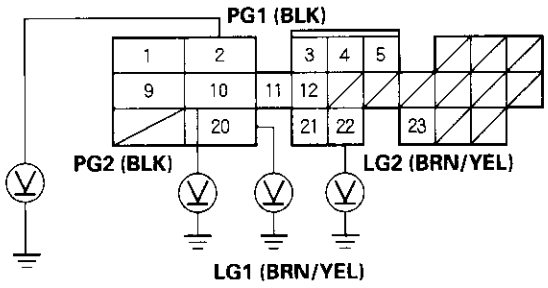


Wire side of female terminals

*Is there less than 1.0 V?*

**YES** – Substitute a known-good ECM and recheck (see page 11-5). If the symptom/indication goes away, replace the original ECM. ■

**NO** – Repair open in the wire(s) that had more than 1.0 V between G101 and the ECM (B2, B10, B20, B22). ■

20. Turn the ignition switch OFF.

21. Connect an OBD II scan tool/Honda PGM Tester (see page 11-3).

22. Turn the ignition switch ON (II).

23. Read the OBD II scan tool/Honda PGM Tester.

*Are any DTCs indicated?*

**YES** – Go to the DTC Troubleshooting Index. ■

**NO** – Go to step 24.

(cont'd)

## MIL Circuit Troubleshooting (cont'd)

24. Turn the ignition switch OFF.
25. Disconnect ECM connector A (32P).
26. Check for continuity between body ground and Data Link Connector (DLC) (16P) terminal No. 15.

**DATA LINK CONNECTOR (DLC) (16P)**

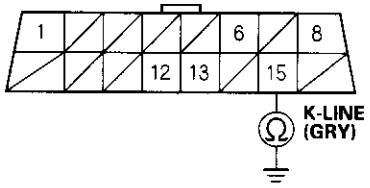


Wire side of female terminals

*Is there continuity?*

**YES** – Repair short in the wire between the DLC and the ECM (A21). ■

**NO** – Go to step 27.

27. Turn the ignition switch ON (II).
28. Measure voltage between ECM connector terminal A10 and body ground.

**ECM CONNECTOR A (32P)**

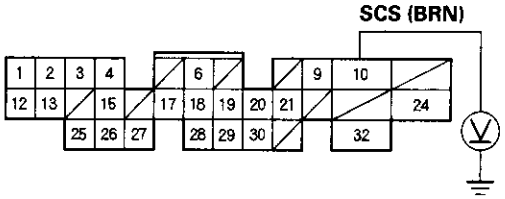


Wire side of female terminals

*Is there about 5 V?*

**YES** – Go to step 29.

**NO** – Repair short in the wire between the DLC and the ECM (A10). ■

29. Turn the ignition switch OFF.
30. Disconnect ECM connector A (32P).
31. Reconnect the negative cable to the battery.
32. Turn the ignition switch ON (II).

*Is the MIL on?*

**YES** – Repair short in the wire between the gauge assembly and the ECM (A18). ■

**NO** – Substitute a known-good ECM and recheck (see page 11-5). If the symptom/indication goes away, replace the original ECM. ■

## DLC Circuit Troubleshooting

If the ECM does not communicate with the OBD II scan tool, Honda PGM Tester, or I/M test equipment, do this troubleshooting procedure.

1. Measure voltage between DLC terminal No. 8 and body ground.

**DATA LINK CONNECTOR (DLC) (16P)**

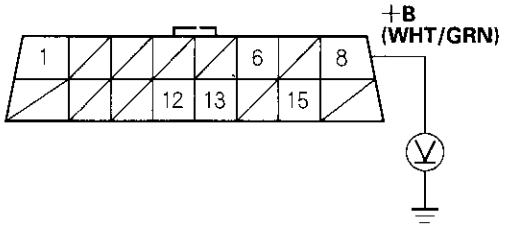


Wire side of female terminals

*Is there battery voltage?*

**YES** – Go to step 2.

**NO** - Repair open in the wire between DLC terminal No. 8 and the ACGS (15A) fuse in the under-hood fuse/relay box.■

2. Measure voltage between DLC terminals No. 8 and No. 12.

**DATA LINK CONNECTOR (DLC)**

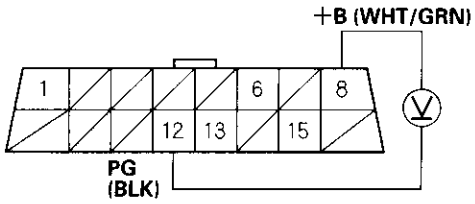


Wire side of female terminals

*Is there battery voltage?*

**YES** Go to step 3.

**NO** – Repair open in the wire between DLC terminal No. 8 and body ground (G401).■

3. Measure voltage between DLC terminals No. 8 and No. 13.

**DATA LINK CONNECTOR (DLC) (16P)**

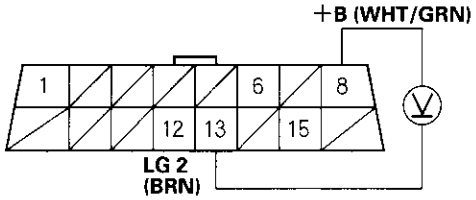


Wire side of female terminals

*Is there battery voltage?*

**YES** – Go to step 4.

**NO** – Repair open in the wire between DLC terminal No. 8 and body ground (G101).■

4. Turn the ignition switch ON (II).

5. Measure voltage between DLC terminals No. 13 and No. 15.

**DATA LINK CONNECTOR (DLC)**

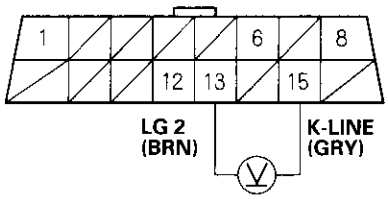


Wire side of female terminals

*Is there 8.5 V or more?*

**YES** – Go to step 10.

**NO** – Go to step 6.

6. Turn the ignition switch OFF.

(cont'd)

## DLC Circuit Troubleshooting (cont'd)

7. Disconnect ECM connector A (32P). Make sure the OBD II scan tool or Honda PGM Tester is disconnected from the DLC.

8. Check for continuity between DLC terminal No. 15 and body ground.

**DATA LINK CONNECTOR (DLC) (16P)**

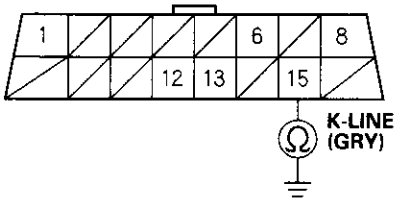


Wire side of female terminals

*Is there continuity?*

**YES** – Repair short to ground in the wire between DLC terminal No. 15 and the ECM (A21). After repairing the wire, check the DTC with the OBD II scan tool/Honda PGM Tester and go to the DTC Troubleshooting index.■

**NO** – Go to step 9.

9. Check for continuity between DLC terminal No. 15 and ECM terminal A21.

**DATA LINK CONNECTOR (DLC) (16P)**

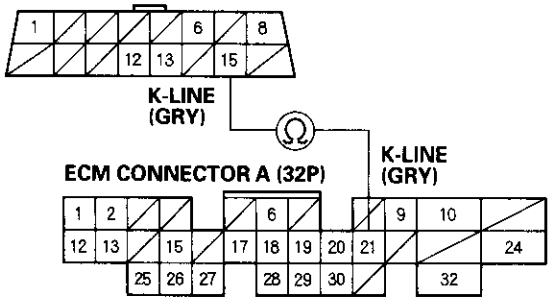


Wire side of female terminals

*Is there continuity?*

**YES** – Substitute a known-good ECM and recheck (see page 11-5). If the symptom/indication goes away, replace the original ECM.■

**NO** – Repair open in the wire between DLC terminal No. 15 and the ECM (A21). After repairing the wire, check the DTC with the OBD II scan tool/Honda PGM Tester and go to the DTC Troubleshooting index.■

10. Turn the ignition switch OFF.

11. Disconnect ECM connector A (32P). Make sure the OBD II scan tool or Honda PGM Tester is disconnected from the DLC.

12. Turn the ignition switch ON (II).

13. Measure voltage between DLC terminals No. 13 and No. 15.

**DATA LINK CONNECTOR (DLC) (16P)**

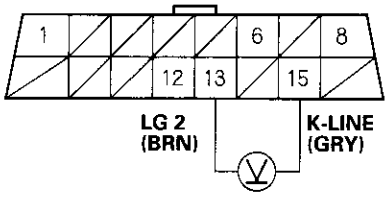


Wire side of female terminals

*Is there 0 V?*

**YES** – Substitute a known-good ECM and recheck (see page 11-5). If the symptom/indication goes away, replace the original ECM.■

**NO** – Repair short to power in the wire between the DLC terminal No. 15 and the ECM (A21). After repairing the wire, check the DTC with the OBD II scan tool/Honda PGM Tester and go to the DTC Troubleshooting index.■

## Injector Replacement

1. Relieve the fuel pressure (see page 11-105).
2. Remove the fuel rail cover (A), then disconnect the connectors from the injectors (B).

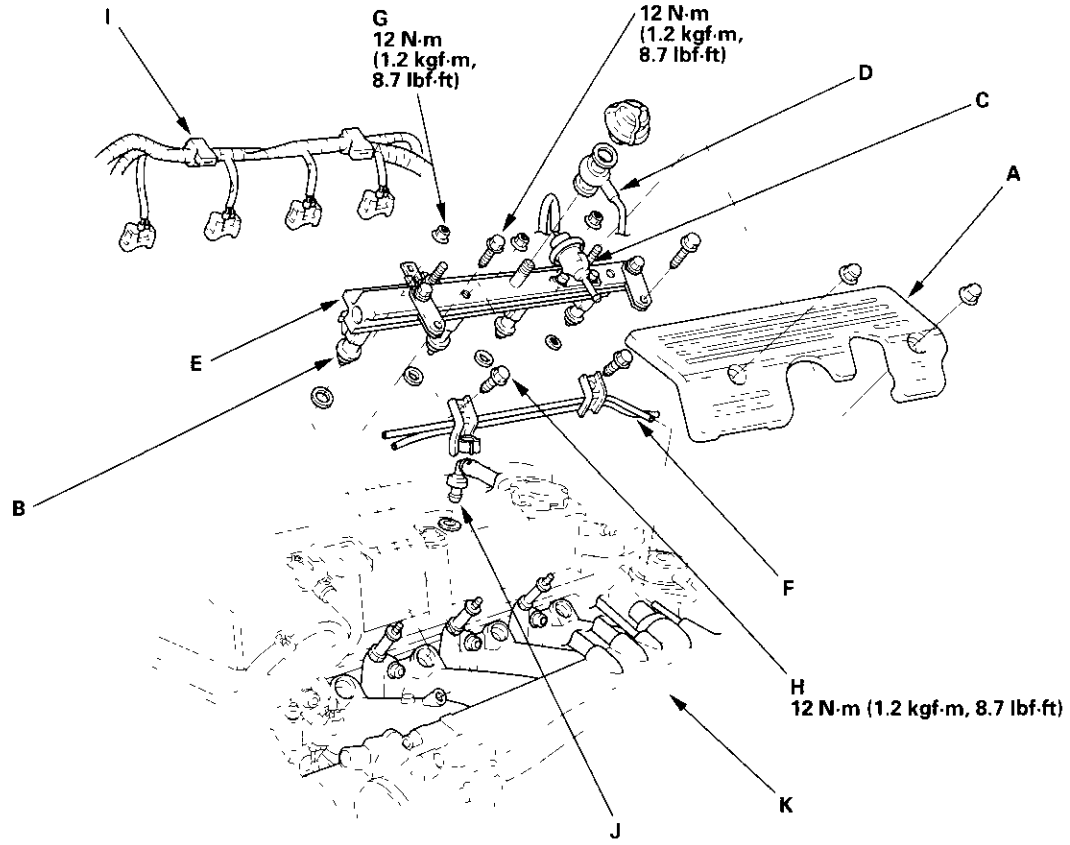


3. Disconnect the vacuum hose and fuel return hose from the fuel pressure regulator (C). Place a rag or shop towel over the hoses before disconnecting them.
4. Disconnect the fuel hose (D) from the fuel rail (E). Remove the vacuum pipes (F).
5. Remove the retainer nuts (G) and bolts (H) from the fuel rail and harness holder (I).
6. Disconnect the PCV valve (J).
7. Disconnect the fuel rail.
8. Remove the injectors from the intake manifold (K).

(cont'd)

## Injector Replacement (cont'd)

9. Slide new cushion rings (A) onto the injectors (B).

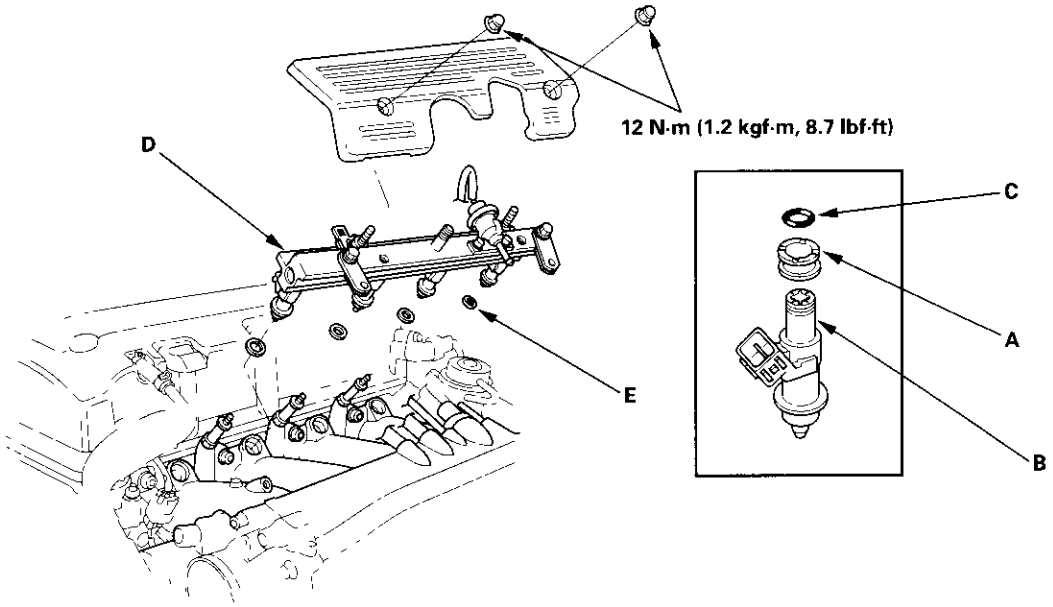


10. Coat new O-rings (C) with clean engine oil, and put them on the injectors.
11. Insert the injectors into the fuel rail (D).
12. Coat new seal rings (E) with clean engine oil, and press them into the intake manifold.
13. Install the injectors in the intake manifold.
14. Install and tighten the retainer nuts.
15. Connect the fuel hose to the fuel rail with new washers.
16. Connect the vacuum hoses and fuel return hose to the fuel pressure regulator.
17. Connect the PCV valve.
18. Turn the ignition switch ON (II), but do not operate the starter. After the fuel pump runs for approximately 2 seconds, the fuel pressure in the fuel line rises. Repeat this 2 or 3 times, then check whether there is any fuel leakage.

## Primary HO2S Replacement

1. Disconnect the primary HO2S 4P connector (A).

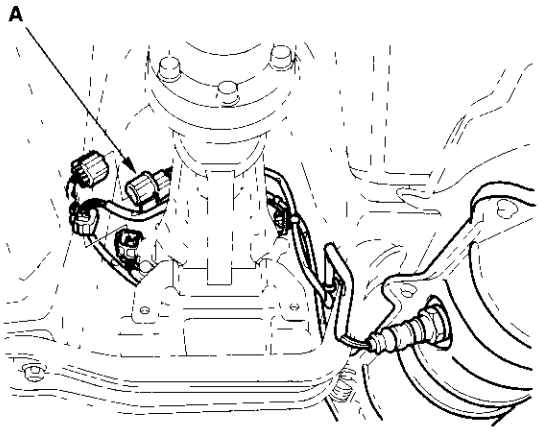


2. Remove the primary HO2S (B).

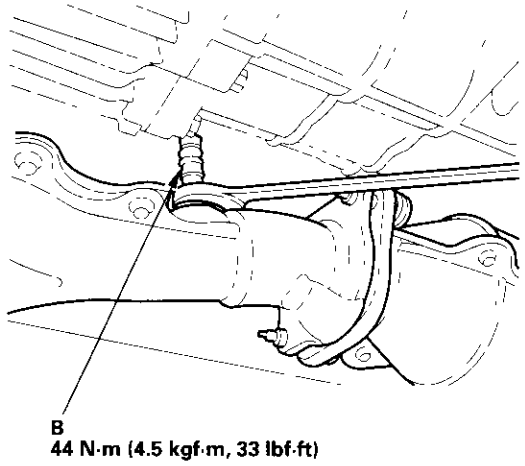


3. Install the primary HO2S in the reverse order of removal.

## Secondary HO2S Replacement

1. Disconnect the secondary HO2S 4P connector (A).

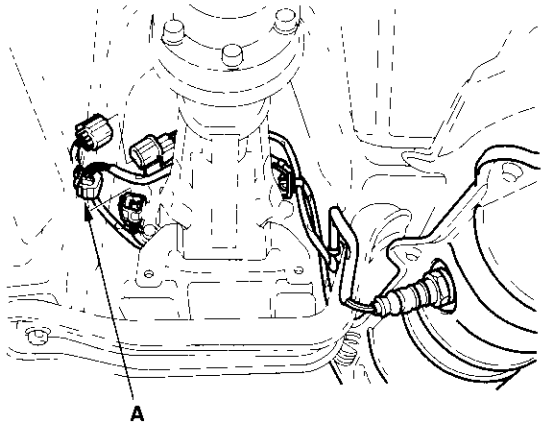


2. Remove the secondary HO2S (B).

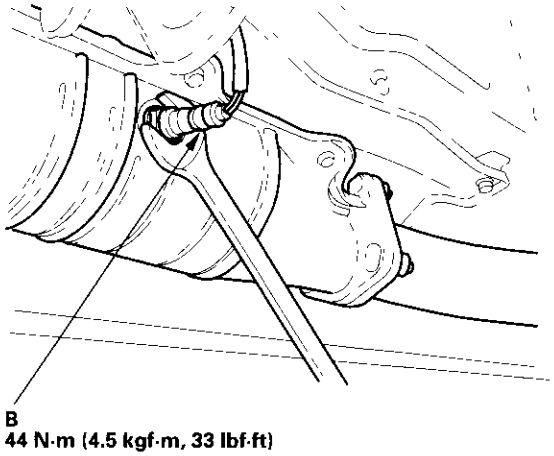


3. Install the secondary HO2S in the reverse order of removal.

## Component Location Index

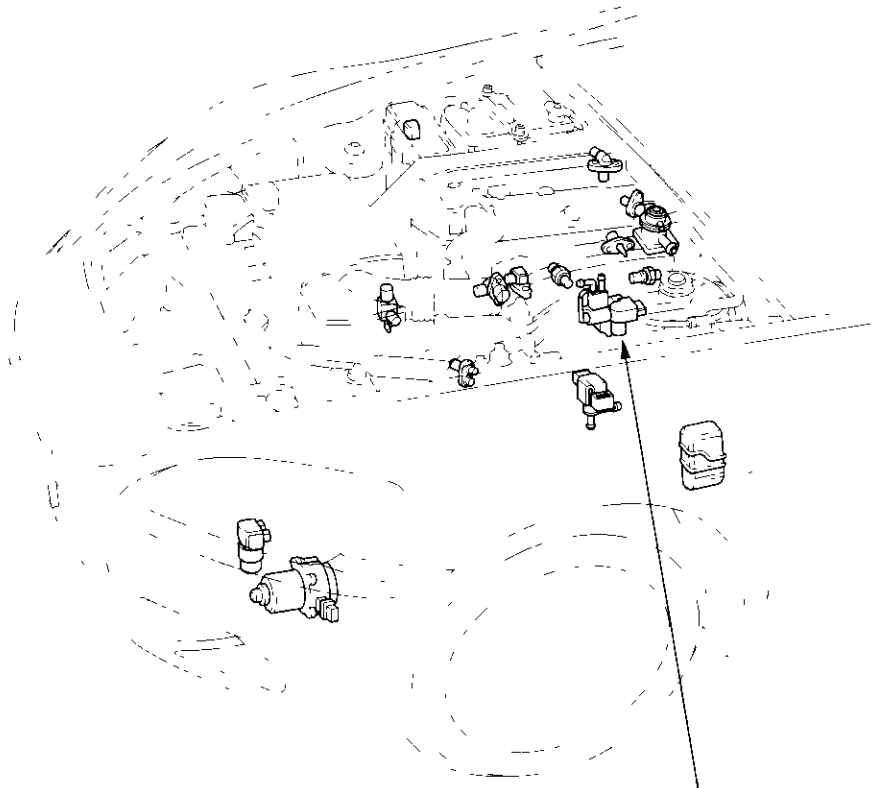

**IDLE AIR CONTROL (IAC) VALVE**
Troubleshooting, page 11-92

## DTC Troubleshooting

### **DTC P0505:** Idle Control System Malfunction

NOTE: If DTC P1519 is stored at the same time as DTC P0505, troubleshooting DTC P1519 first, then recheck for DTC P0505.

1. Start the engine. Hold the engine at 3,000 rpm with no load (in neutral) until the radiator fan comes on, then let it idle.

2. Check the engine speed at idle with no-load conditions: headlights, blower fan, radiator fan, and air conditioner off.

   *Is the idle 800± 50 rpm?*

   **YES** – Intermittent failure, system is OK at this time. ■

   **NO** – If the idle speed is less than 750 rpm, go to step 3; if it's 850 rpm or higher, go to step 4.

3. Disconnect the 3P connector from the IAC valve.

   *Dose the engine speed increase or fluctuate?*

   **YES** – Check the idle speed (see page 11-100). If the idle will not adjust properly, clean the ports in the throttle body. ■

   **NO** – Replace the IAC valve. ■

4. Turn the ignition switch OFF.

5. Remove the intake air duct from the throttle body.

6. Start the engine and let it idle.

7. Block both the upper and the lower ports (A) in the throttle body with your fingers.

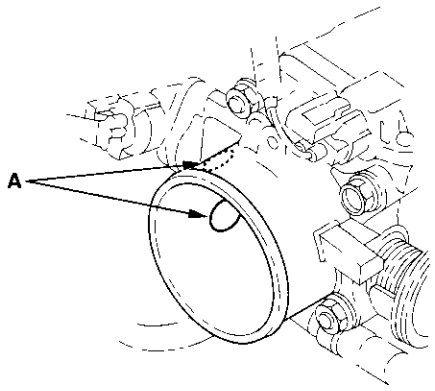


*Does the engine stall?*

**YES** – Replace the IAC valve. ■

**NO** – Check for vacuum leaks, test the throttle body (see page 11-122), and repair as necessary. ■

## DTC Troubleshooting (cont'd)

### DTC P1519: IAC Valve Circuit Malfunction

1. Reset the ECM (see page 11-4).
2. Turn the ignition switch ON (II).

   *Is DTC P1519 indicated?*

   **YES** – Go to step 3.

   **NO** – Intermittent failure, system is OK at this time. Check for poor connections or loose terminals at the IAC valve and at the ECM.■
3. Turn the ignition switch OFF.
4. Disconnect the IAC valve 3P connector.
5. Turn the ignition switch ON (II).
6. Measure voltage between IAC valve 3P connector terminal No. 2 and body ground.

**IAC VALVE 3P CONNECTOR**

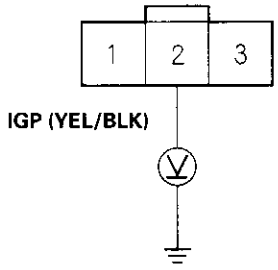


Wire side of female terminals

*Is there battery voltage?*

**YES** – Go to step 7.

**NO** – Repair open in the wire between the IAC valve and the PGM-FI main relay.■

7. Turn the ignition switch OFF.
8. Check for continuity between body ground and IAC valve 3P connector terminal No. 1.

**IAC VALVE 3P CONNECTOR**

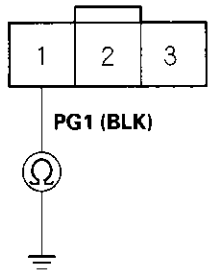


Wire side of female terminals

*Is there continuity?*

**YES** – Go to step 9.

**NO** – Repair open in the wire between the IAC valve and G101.■

9. Disconnect ECM connector B (25P).
10. Check for continuity between body ground and ECM connector terminal B23.

**ECM CONNECTOR B (25P)**

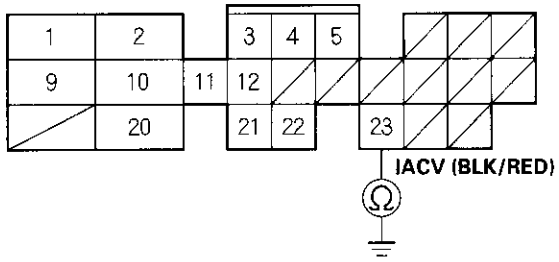


Wire side of female terminals

*Is there continuity?*

**YES** – Repair short in the wire between the IAC valve and the ECM (B23).■

**NO** – Go to step 11.

11. Connect IAC valve 3P connector terminals No. 1 and No. 3 with a jumper wire.

**IAC VALVE 3P CONNECTOR**

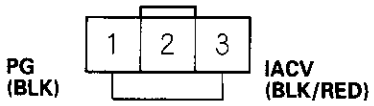


**JUMPER WIRE**

Wire side of female terminals

12. Check for continuity between ECM connector terminal B23 and body ground.

**ECM CONNECTOR B (25P)**

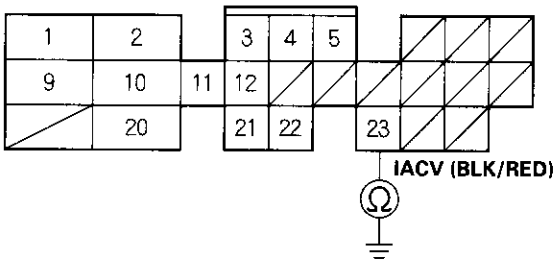


Wire side of female terminals

*Is there continuity?*

**YES** – Go to step 13.

**NO** – Repair open in the wire between the IAC valve and the ECM (B23). ■

13. Remove the jumper wire from the IAC valve 3P connector, then reconnect the IAC valve 3P connector.

14. Turn the ignition switch ON (II).

15. Measure voltage between body ground and ECM connector terminal B23.

**ECM CONNECTOR B (25P)**

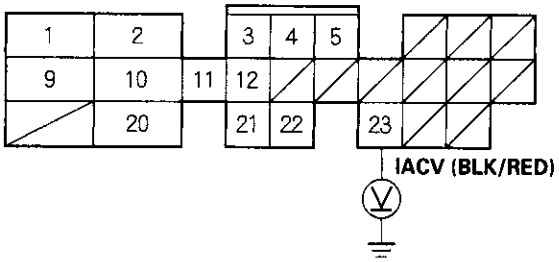


Wire side of female terminals

*Is there battery voltage?*

**YES** – Substitute a known-good ECM and recheck (see page 11-5). If the symptom/indication goes away, replace the original ECM. ■

**NO** – Replace the IAC valve. ■

## A/C Signal Circuit Troubleshooting

1. Turn the ignition switch OFF.
2. Disconnect the A/C pressure switch connector.
3. Turn the ignition switch ON (II).
4. Measure voltage between ECM connector terminals A27 and B20.

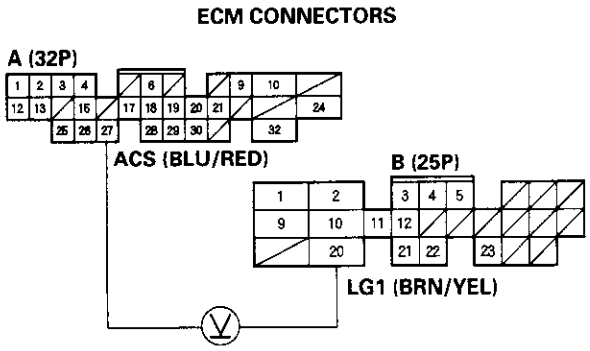


Wire side of female terminals

*Is there about 5V?*

**YES** – Go to step 5.

**NO** – Go to step 12.

5. Turn the ignition switch OFF.
6. Reconnect the A/C pressure switch connector.
7. Turn the ignition switch ON (II).
8. Momentarily connect ECM connector terminals A17 and B20 with a jumper wire several times.

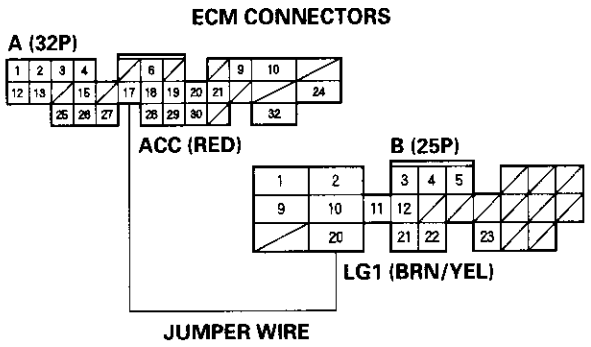


Wire side of female terminals

*Is there a clicking noise from the A/C compressor clutch?*

**YES** – Go to step 9.

**NO** – Go to step 16.

9. Start the engine.
10. Turn the blower switch ON.
11. Turn the A/C switch ON.

*Does the A/C operate?*

**YES** – The air conditioning signal is OK.■

**NO** – Go to step 16.

12. Turn the ignition switch OFF.
13. Disconnect ECM connector A (32P)

14. Check for continuity between body ground and ECM connector terminal A27.

**ECM CONNECTOR A (32P)**

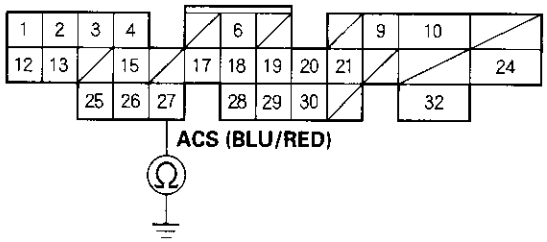


Wire side of female terminals

*Is there continuity?*

**YES** – Repair short in the wire between ECM (A27) and the A/C pressure switch. ■

**NO** – Substitute a known-good ECM and recheck (see page 11-5). If voltage is now normal, replace the original ECM. If not, check the A/C system for other symptoms. ■

15. Momentarily connect main under-hood fuse/relay box 16P connector terminal No. 11 to body ground with a jumper wire several times.

NOTE: The main under-hood fuse/relay box 14P connector is on the bottom of the fuse box. When you unbolt and invert the fuse box, leave the upper cover on it to prevent short circuits.

**MAIN UNDER-HOOD FUSE/RELAY BOX CONNECTOR D (16P)**

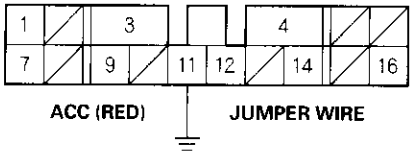


Wire side of female terminals

*Is there a clicking noise from the A/C compressor clutch?*

**YES** – Repair open in the wire between the ECM (A17) and the A/C clutch relay. ■

**NO** – Check the A/C system for other symptoms. ■

16. Measure voltage between ECM connector terminals A27 and B20.

**ECM CONNECTORS**

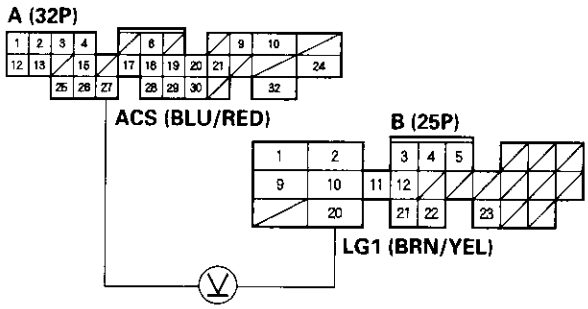


Wire side of female terminals

*Is there less than 1.0 V?*

**YES** – Substitute a known-good ECM and recheck (see page 11-5). If the symptom/indication goes away, replace the original ECM. If not, inspect the A/C system (see page 21-8). ■

**NO** – Repair open in the wire between the ECM (A 27) and the A/C pressure switch, or between the A/C pressure switch and the heater control panel. ■

## Alternator FR Signal Circuit Troubleshooting

1. Disconnect the alternator 4P connector.
2. Turn the ignition switch ON (II).
3. Measure voltage between ECM connector terminals B20 and C5.

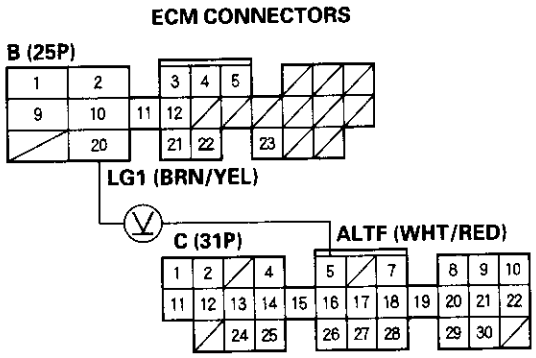


Wire side of female terminals

*Is there about 5 V?*

**YES** – Go to step 4.

**NO** – Go to step 14.

4. Turn the ignition switch OFF.
5. Reconnect the alternator 4P connector.
6. Start the engine. Hold the engine at 3,000 rpm with no load (in neutral) until the radiator fan comes on, then let it idle.
7. Measure voltage between ECM connector terminals B20 and C5.

*Does the voltage decrease when the headlights and rear window defogger are turned on?*

**YES** – The alternator FR signal is OK. ■

**NO** – Go to step 8.

8. Turn the ignition switch OFF.
9. Disconnect ECM connector C (31P).
10. Disconnect the alternator 4P connector.
11. Connect alternator 4P connector terminal No. 4 to body ground with a jumper wire.

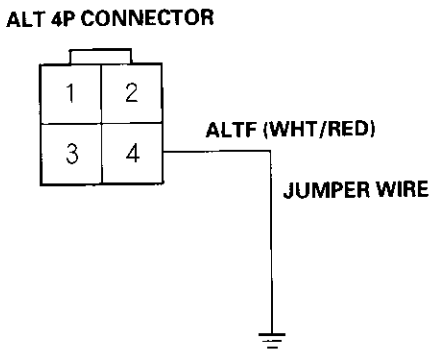


Wire side of female terminals

12. Check for continuity between body ground and ECM connector terminal C5.

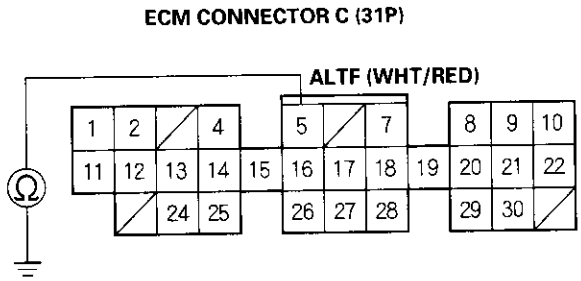


Wire side of female terminals

*Is there continuity?*

**YES** – Test the alternator (see step 1 on page 4-23). ■

**NO** – Repair open in the wire between the ECM (C5) and the alternator. ■

13. Turn the ignition switch OFF.
14. Disconnect ECM connector C (31P).

15. Check for continuity between body ground and ECM connector terminal C5.

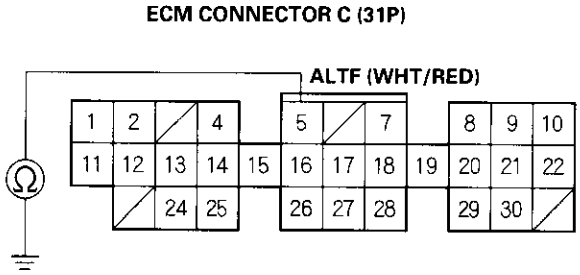


Wire side of female terminals

*Is there continuity?*

**YES** – Repair short in the wire between the ECM (C5) and the alternator. ■

**NO** – Substitute a known-good ECM and recheck (see page 11-5). If prescribed voltage is now normal, replace the original ECM. ■

## Starter Switch Signal Circuit Troubleshooting

NOTE: The clutch pedal must be pressed.

1. Measure voltage between ECM connector terminals A24 and B20 with the ignition switch in the ON (II) position and the engine start button pressed.

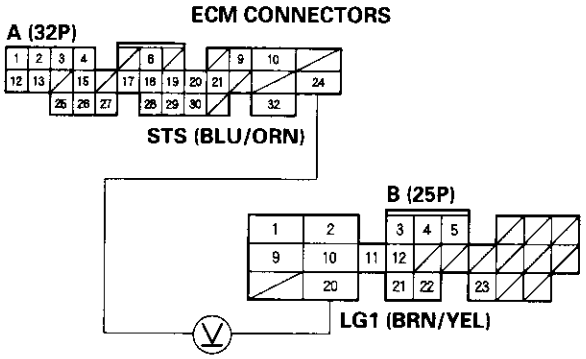


Wire side of female terminals

*Is there battery voltage?*

**YES** – The starter switch signal is OK. ■

**NO** – Go to step 2.

2. Inspect the No. 21 STARTER SIGNAL (7.5 A) fuse in the under-dash fuse/relay box.

*Is the fuse OK ?*

**YES** – Repair open in the wire between the ECM (A24) and the No. 21 STARTER SIGNAL (7.5 A) fuse. ■

**NO** – Repair short in the wire between the ECM (A24) and the No. 21 STARTER SIGNAL (7.5 A) fuse or the PGM-FI main relay. Replace the No. 21 STARTER SIGNAL (7.5 A) fuse. ■

## Electrical Power Steering (EPS) Signal Circuit Troubleshooting

1. Turn the ignition switch ON (II).
2. Measure voltage between ECM connector terminals A26 and B20.

ECM CONNECTORS

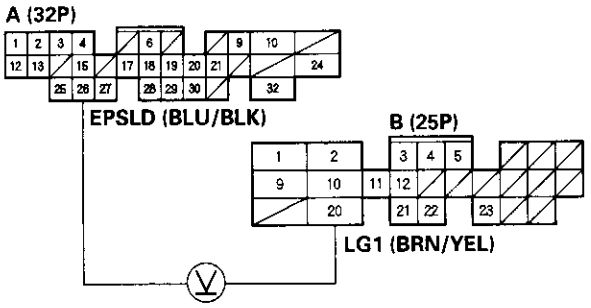


Wire side of female terminals

*Is there battery voltage?*

**YES** – Go to step 6.

**NO** – Go to step 3.

3. Start the engine.
4. Turn the steering wheel to the full lock position.
5. Measure voltage between ECM connector terminals A26 and B20.

*Is there battery voltage briefly?*

**YES** – The EPS signal is OK. ■

**NO** – Go to step 10.

6. Turn the ignition switch OFF.
7. Disconnect the EPS control unit 14P connector.
8. Turn the ignition switch ON (II).
9. Measure voltage between EPS control unit terminal No. 13 and body ground.

EPS CONTROL UNIT 14P CONNECTOR

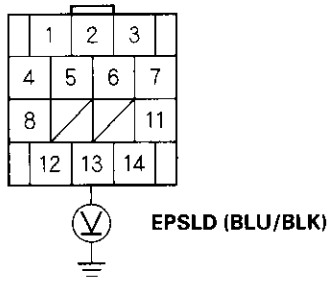


Wire side of female terminals

*Is there battery voltage?*

**YES** Substitute a known-good EPS control unit and recheck. ■

**NO** – Repair open in the wire between the ECM (A26) and the EPS control unit. ■

10. Turn the ignition switch OFF.
11. Disconnect the EPS control unit 14P connector.
12. Turn the ignition switch ON (II).

13. Measure voltage between EPS control unit terminal No. 13 and body ground.

**EPS CONTROL UNIT 14P CONNECTOR**

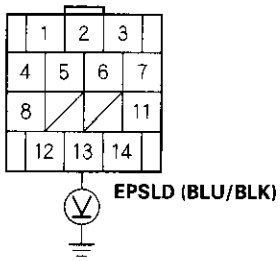


Wire side of female terminals

*Is there battery voltage?*

**YES** – Substitute a known-good EPS control unit and recheck. ■

**NO** – Go to step 14.

14. Turn the ignition switch OFF.
15. Disconnect ECM connector A (32P).
16. Check for continuity between body ground and ECM connector terminal A26.

**ECM CONNECTOR A (32P)**

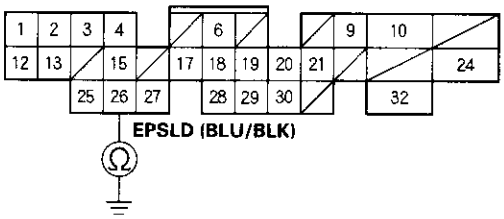


Wire side of female terminals

*Is there continuity?*

**YES** – Repair short in the wire between the ECM (A26) and the EPS control unit. ■

**NO** – Substitute a known-good ECM and recheck (see page 11-5). If the voltage is now normal, replace the original ECM. ■

## Brake Pedal Position Switch Signal Circuit Troubleshooting

1. Check the brake lights.

*Are the brake lights on without pressing the brake pedal?*

**YES** – Inspect the brake pedal position switch adjustment (see page 19-6). ■

**NO** – Go to step 2.

2. Press the brake pedal.

*Do the brake lights come on?*

**YES** – Go to step 3.

**NO** – Go to step 4.

3. Measure voltage between ECM connector terminals A32 and B20 with the brake pedal pressed.

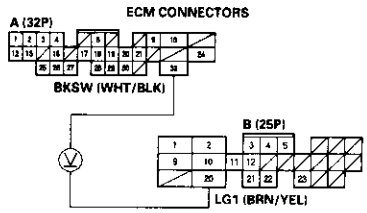


Wire side of female terminals

*Is there battery voltage?*

**YES** – The brake pedal position switch signal is OK. ■

**NO** – Repair open in the wire between the ECM (A32) and the brake pedal position switch. ■

4. Inspect the STOP (10A) fuse in the under-hood fuse/relay box.

*Is the fuse OK?*

**YES** – Repair open in the wire between the brake pedal position switch and the STOP (10A) fuse. Inspect the brake pedal position switch (see page 4-47). ■

**NO** – Repair short in the wire between the ECM (A32) and the STOP (10A) fuse. Replace the STOP (10A) fuse. ■

## Idle Speed Inspection

NOTE:
- Leave the IAC valve connected.
- Before checking the idle speed, check these items:
  - The MIL has not been reported on.
  - Ignition timing
  - Spark plugs
  - Air cleaner
  - PCV system
- On Canadian models, pull the parking brake lever up. Start the engine, then check that the headlights are off.

1. Disconnect the EVAP canister purge valve 2P connector.
2. Connect a tachometer.
3. Start the engine. Hold the engine at 3,000 rpm with no load (in neutral) until the radiator fan comes on, then let it idle.
4. Check the idle speed with no-load conditions: headlights, blower fan, radiator fan, and air conditioner off.

   **Idle speed should be: 800±50 rpm**
5. Idle the engine for 1 minute with the heater fan switch on HI and the air conditioner on, then check the idle speed.

   **Idle speed should be: 900±50 rpm**

   NOTE:
   If the idle speed is not within specification, see Symptom Chart.
6. Reconnect the EVAP canister purge valve 2P connector.

## ECM Idle Learn Procedure

The idle learn procedure must be done so that the ECM can learn the engine idle characteristics.
Do the idle learn procedure whenever you do any of these actions:
- Disconnect the battery.
- Replace the ECM or disconnect its connector.
- Reset the ECM.
  NOTE: Erasing DTCs with Honda PGM Tester does require the idle learn procedure to be done again.
- Remove the No. 6 ECU (ECM) (15A) fuse from the under-dash fuse/relay box.
- Remove the No. 41 BATTERY (100A) fuse from the under-hood fuse/relay box.
- Remove the PGM-FI main relay.
- Remove the battery wire from the under-hood fuse/relay box.
- Disconnect any of the connectors from the under-hood fuse/relay box.
- Disconnect the connector (C404) between the dashboard wire harness A and dashboard wire harness B.
- Disconnect the G1 terminal.
- Adjust the idle speed.

To complete the idle learn procedure do this:

1. Make sure all electrical items (A/C, audio, rear window defogger, lights, etc.) are turned off.
2. Start the engine. Hold the engine speed at 3,000 rpm with no load (in Park or neutral) until the radiator fan comes on, or the engine coolant temperature reaches 176°F (80°) – 212°F (100°).
3. Let the engine idle for about 5 minutes with the throttle fully closed and with all electrical items off.

NOTE: If the radiator fan comes on during this step, the time when it is operating must not be included in the 5 minutes.

## Component Location Index

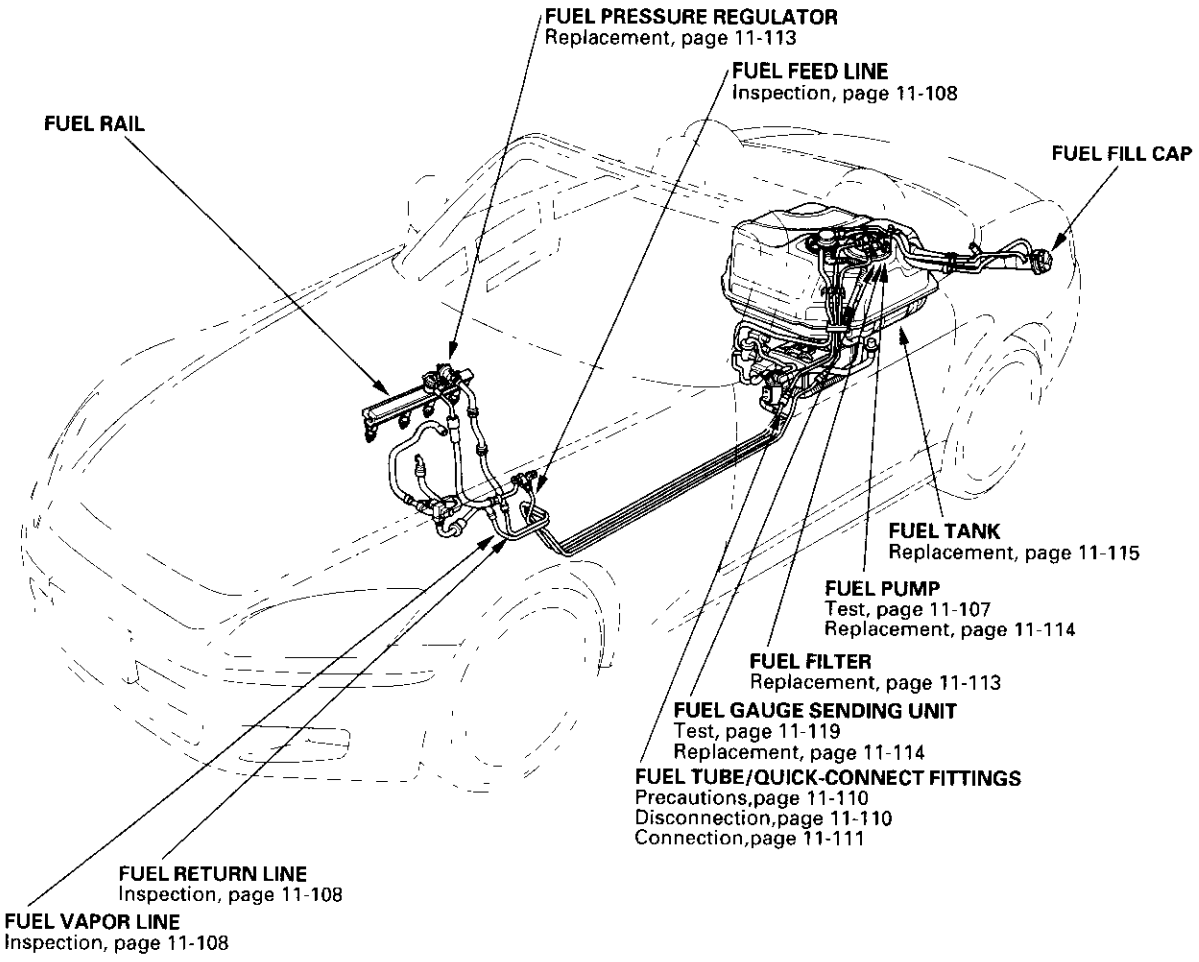


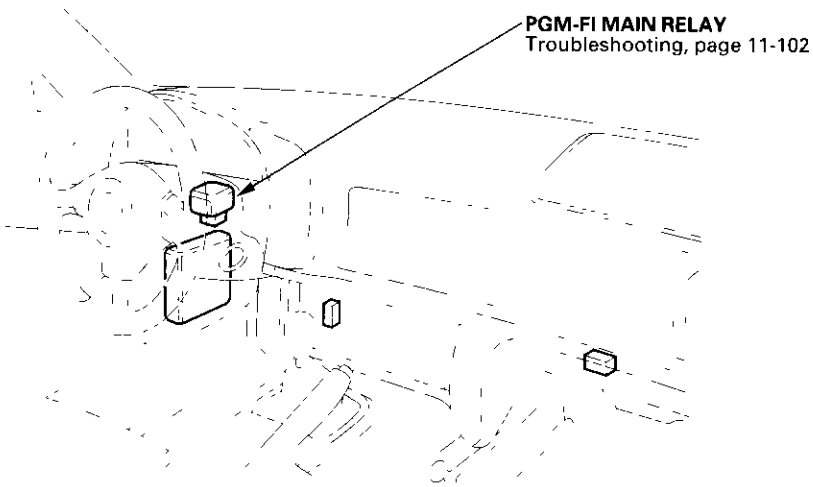

## PGM-FI Main Relay Circuit Troubleshooting

1. Turn the ignition switch OFF, then disconnect the PGM-FI main relay 7P connector.
2. Check for continuity between body ground and PGM-FI main relay 7P connector terminal No. 3.

**PGM-FI MAIN RELAY 7P CONNECTOR**

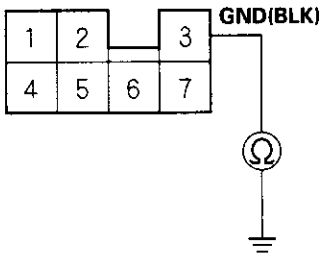


Wire side of female terminals

*Is there continuity?*

**YES** – Go to step 3.

**NO** – Repair open in the wire between the PGM-FI main relay and G101.■

3. Measure voltage between body ground and PGM-FI main relay 7P connector terminal No. 7.

**PGM-FI MAIN RELAY 7P CONNECTOR**

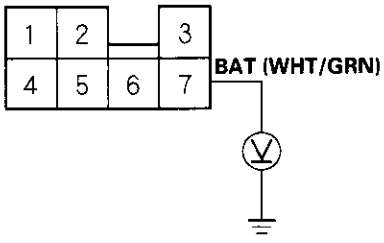


Wire side of female terminals

*Is there battery voltage?*

**YES** – Go to step 5.

**NO** – Go to step 4.

4. Check for a blown ACG S (15 A) fuse in the under-hood fuse/relay box.

*Is the fuse blown?*

**YES** – Repair the short in the wire between the PGM-FI main relay and the ACG S (15A) fuse.■

**NO** – Repair the open in the wire between the PGM-FI main relay and the ACG S (15A) fuse.■

5. Turn the ignition switch ON (II), and measure voltage between body ground and PGM-FI main relay 7P connector terminal No. 5.

**PGM-FI MAIN RELAY 7P CONNECTOR**

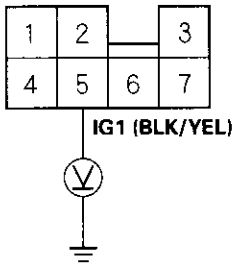


Wire side of female terminals

*Is there battery voltage?*

**YES** – Go to step7.

**NO** – Go to step 6.

6. Check for a blown No. 2 FUEL PUMP SRS (15A) fuse in the under-dash fuse/relay box.

*Is the fuse blown?*

**YES** – Repair short in the wire between the PGM-FI main relay and the No. 2 FUEL PUMP SRS (15A) fuse.■

**NO** – Repair open in the wire between the PGM-FI main relay and the No. 2 FUEL PUMP SRS (15A) fuse.■

7. Push the clutch pedal in, then turn the ignition switch ON (II), and press the engine start button. Measure voltage between body ground and PGM-FI main relay 7P connector terminal No. 2.

**PGM-FI MAIN RELAY 7P CONNECTOR**

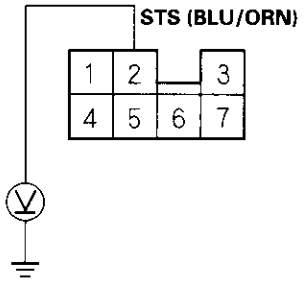


Wire side of female terminals

*Is there battery voltage?*

**YES** – Go to step 9.

**NO** – Go to step 8.

8. Check for a blown No. 21 STARTER SIGNAL (7.5A) fuse in the under-dash fuse/relay box.

*Is the fuse blown?*

**YES** – Repair short in the wire between the PGM-FI main relay and the No. 21 STARTER SIGNAL (7.5A) fuse. ■

**NO** – Repair open in the wire between the PGM-FI main relay and the No. 21 STARTER SIGNAL (7.5A). ■

9. Turn the ignition switch OFF, and disconnect ECM connector A (32P).

10. Check for continuity between PGM-FI main relay 7P connector terminal No. 1 and ECM connector terminal A15.

**PGM-FI MAIN RELAY 7P CONNECTOR**

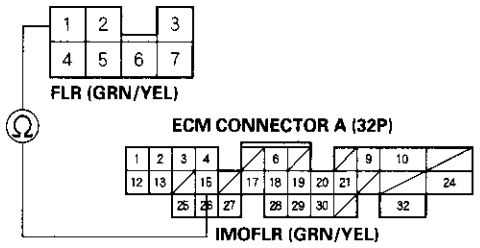


Wire side of female terminals

*Is there continuity?*

**YES** – Go to step 12.

**NO** – Repair open in the wire between the PGM-FI main relay and the ECM (A15). ■

11. Reconnect ECM connector A (32P) and the PGM-FI main relay 7P connector.

12. Turn the ignition switch ON (II), and measure voltage between ECM connector terminals B1 and B20, and between B9 and B20 individually.

**ECM CONNECTOR B (25P)**

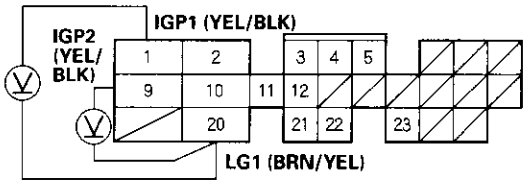


Wire side of female terminals

*Is there battery voltage?*

**YES** – Go to step 13.

**NO** – Check for an open in the wires between the PGM-FI main relay and the ECM (B1, B9). If the wires are OK, replace the PGM-FI main relay. ■

(cont'd)

## PGM-FI Main Relay Circuit Troubleshooting (cont'd)

13. Turn the ignition switch OFF, then ON (II) again, and measure voltage between ECM connector terminals A15 and B2 within the first 2 seconds after the ignition switch is turned ON (II).

**ECM CONNECTORS**

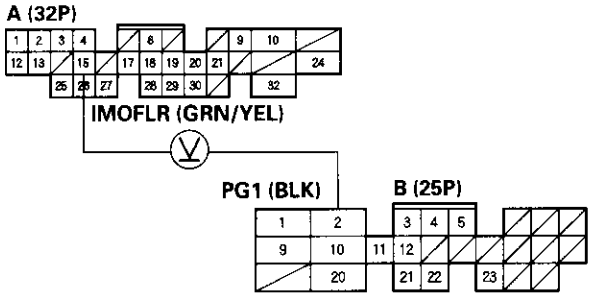


Wire side of female terminals

*Is there 1.0 V or less?*

**YES** – The PGM-FI main relay may be faulty; go to step 14.■

**NO** – Substitute a known-good ECM and recheck (see page 11-5). If the voltage is now normal, replace the original ECM.■

14. Remove the PGM-FI main relay.

15. Connect battery power to PGM-FI main relay 7P connector terminal No. 2 and connect ground to the PGM-FI main relay 7P connector terminal No. 1. Then check for continuity between PGM-FI main relay 7P connector terminals No. 5 and No. 4.

NOTE: Use the terminal numbers shown. Ignore the terminal numbers molded into the relay.

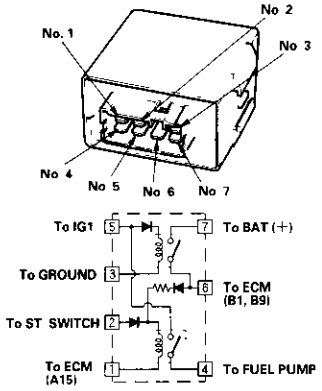


*Is there continuity?*

**YES** – Go to step 16.

**NO** – Replace the PGM-FI main relay and recheck the circuit.■

16. Connect battery power to PGM-FI main relay 7P connector terminal No. 5, and connect ground to PGM-FI main relay 7P connector terminal No. 3. Then check for continuity between PGM-FI main relay 7P connector terminals No. 7 and No. 6.

*Is there continuity?*

**YES** – Go to step 17.

**NO** – Replace the PGM-FI main relay and recheck the circuit.■

17. Connect battery power to PGM-FI main relay 7P connector terminal No. 6, and connect ground to PGM-FI main relay 7P connector terminal No. 1. Then check for continuity between PGM-FI main relay 7P connector terminals No. 5 and No. 4.

*Is there continuity?*

**YES** – The PGM-FI main relay is OK.■

**NO** – Replace the PGM-FI main relay and recheck the circuit.■

## Fuel Pressure Relieving

Before disconnecting fuel lines or hoses, release pressure from the system by loosening the fuel pulsation damper on top of the fuel rail.

1. Make sure you have the anti-theft code for the radio, then write down the frequencies for the radio's preset buttons.
2. Disconnect the negative cable from the battery.
3. Remove the fuel fill cap.
4. Remove the intake manifold cover (A).

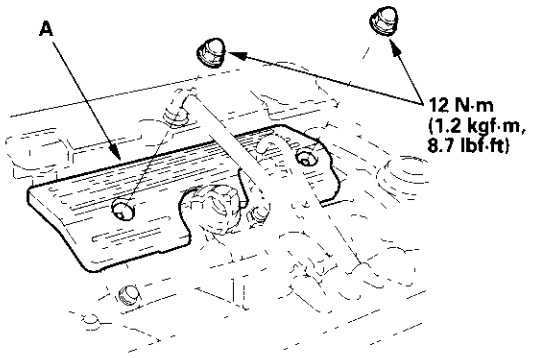


5. Use a wrench on the fuel pulsation damper (A) at the fuel rail.

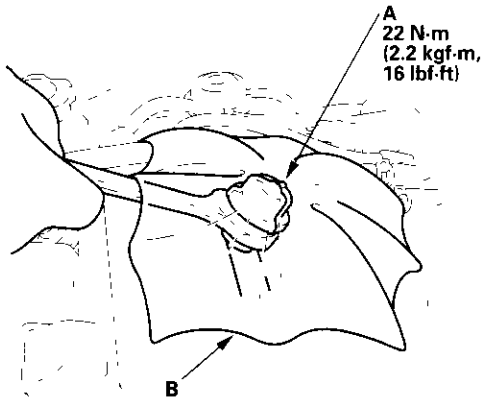


6. Place a rag or shop towel (B) over the fuel pulsation damper.
7. Slowly loosen the fuel pulsation damper one complete turn.

NOTE: Replace all washers whenever the fuel pulsation damper is loosened or removed.

## Fuel Pressure Test

**Special Tools Required**
- Fuel pressure gauge 07406-004000A
- Fuel pressure gauge adapter 07VAJ-0040100

1. Make sure you have the anti-theft code for the radio, then write down the frequencies for the radio's preset buttons.
2. Disconnect the negative cable from the battery.
3. Remove the fuel fill cap.
4. Remove the intake manifold cover (A).

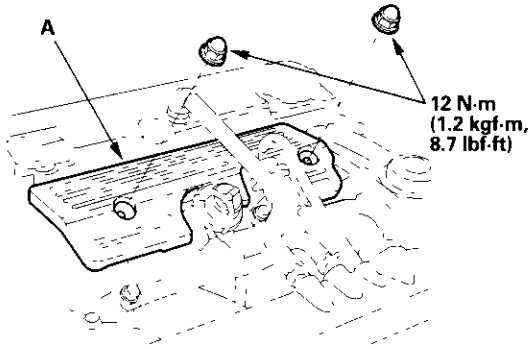


5. Use a wrench on the fuel pulsation damper (A) at the fuel rail.

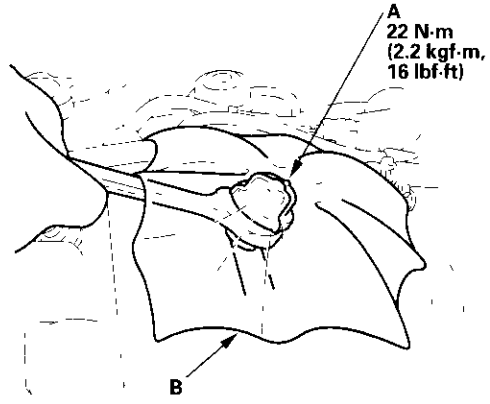


6. Place a rag or shop towel (B) over the fuel pulsation damper.
7. Slowly loosen the fuel pulsation damper one complete turn.

(cont'd)

## Fuel Pressure Test (cont'd)

8. Remove the fuel pulsation damper from the fuel rail.

9. Attach the fuel pressure gauge attachment and fuel pressure gauge.

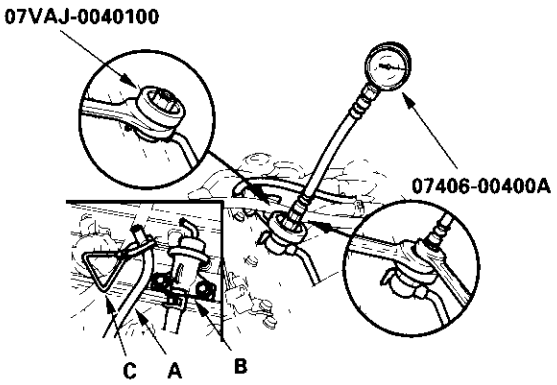


10. Disconnect the vacuum hose (A) from the fuel pressure regulator (B) and pinch it closed with a clamp (C).

11. Reconnect the negative battery cable, then start the engine and let it idle.

    - If the engine starts, go to step 13.
    - If the engine does not start, go to step 12.

12. Check to see if the fuel pump is running: remove the fuel fill cap and listen to the fuel fill port while an assistant turns the ignition switch ON (II), you should hear the pump run for about 2 seconds when the ignition turned ON (II).

    - If the fuel pump runs, go to step 13.
    - If the fuel pump does not run, test it (see page 11-107).

13. Read the pressure gauge (with the fuel pressure regulator vacuum hose disconnected and clamped). The pressure should be 320 – 370 kPa (3.3 – 3.8 kgf/cm$^2$, 47 – 54 psi).

    - If the pressure is OK and the engine is running, go to step 14. If the engine is not running, repair the cause, then continue this test.
    - If the pressure is out of spec, go to step 14.

14. With the engine running, unpinch and reconnect the vacuum hose and read the gauge again. The pressure should be 260 – 310 kPa (2.7 – 3.2 kgf/cm$^2$, 38 – 46 psi).

    - If the fuel pressure is OK, the test is complete.
    - If the pressure is out of spec, go to step 15.

15. Disconnect the vacuum hose from the pressure regulator again while you watch the pressure gauge. The pressure should rise when you disconnect the hose.

    - If the pressure did not rise, replace the fuel pressure regulator (see page 11-115).
    - If the pressure rises, but all your readings were lower than specified, check for a clogged fuel filter and for leaks in the fuel lines.
    - If the pressure rises, but all your readings were higher than specified, check for a pinched or clogged fuel return hose or line.

16. Reconnect the vacuum hose, remove the pressure gauge, and reinstall the fuel pulsation damper with a new washer. Tighten the fuel pulsation damper to 22 N·m (2.2kgf·m, 16 lbf·ft).

    NOTE: Disassemble and clean the fuel pressure gauge attachment thoroughly after use.

## Fuel Pump Test

If you suspect a problem with the fuel pump, check that the fuel pump actually runs; when it is ON, you will hear some noise if you listen to the fuel fill port with the fuel fill cap removed. The fuel pump should run for 2 seconds when ignition switch is first turned on. If the fuel pump does not make noise, check as follows:

1. Remove the rear tray (see page 20-71).
2. Remove the access panel from the floor.
3. Turn the ignition switch OFF.
4. Disconnect the fuel pump 5P connector.
5. Connect the PGM-FI main relay 7P conector terminals No. 4 and No. 5 with a jumper wire.

**PGM-FI MAIN RELAY 7P CONNECTOR**

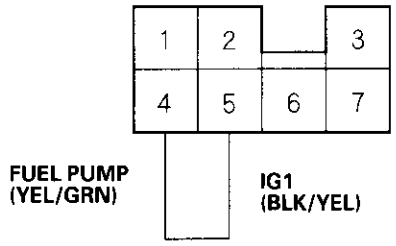


Wire side of female terminals

6. Turn the ignition switch ON (II).
7. Check that battery voltage is available between fuel pump 5P connector terminal No. 5 and body ground when the ignition switch is turned ON (II).
   - If battery voltage is available, check the fuel pump ground. If the ground is OK, replace the fuel pump (see page 11-114).
   - If there is no voltage, check the wire harness (see page 11-102).

**FUEL PUMP 5P CONNECTOR**

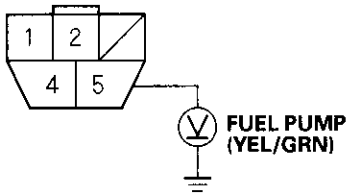


Wire side of female terminals

## Fuel Line Inspection

Check the fuel system lines, hoses, and fuel filter for damage, leaks, or deterioration, and replace parts as needed.

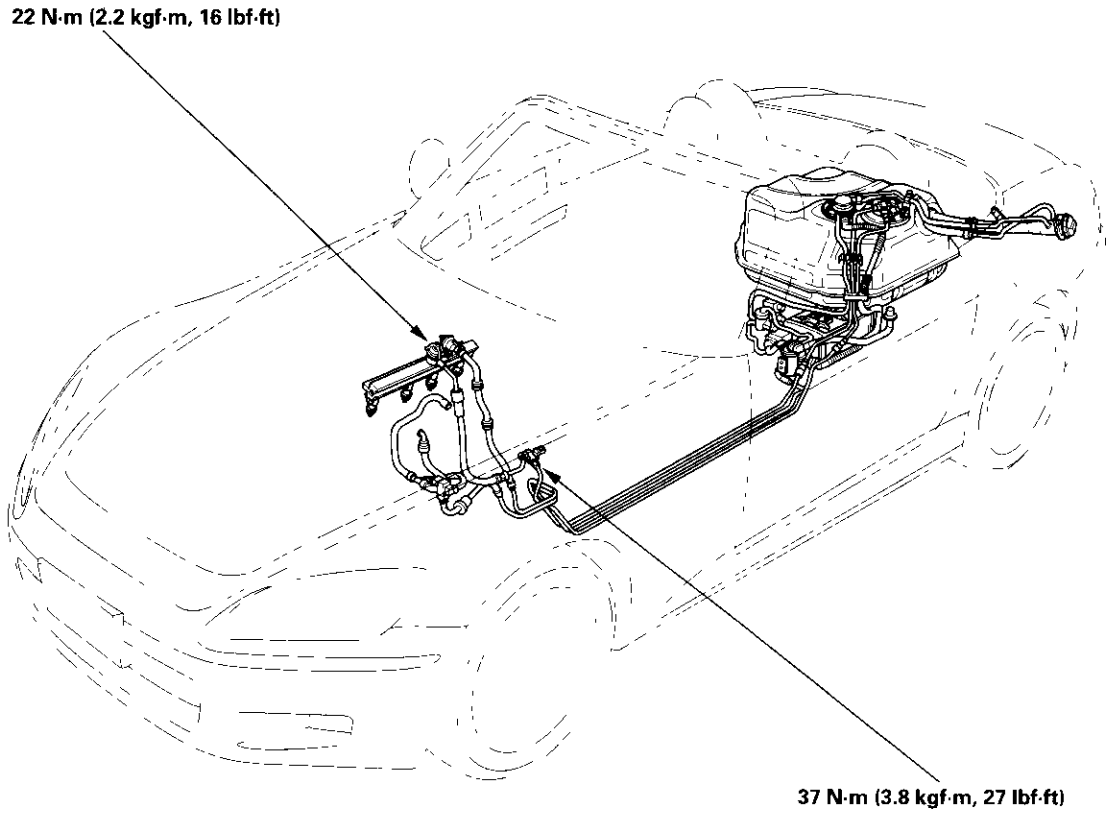

Check all hose clamps and retighten if necessary.
▲: Do not disconnect the hose from the line at these joints.

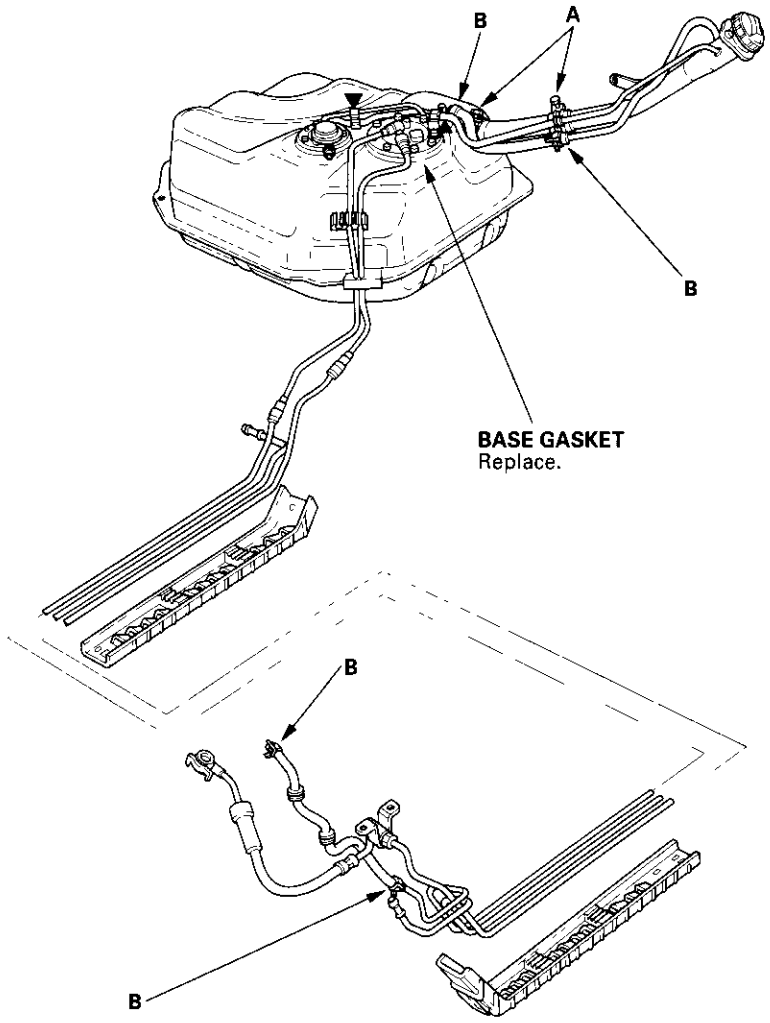


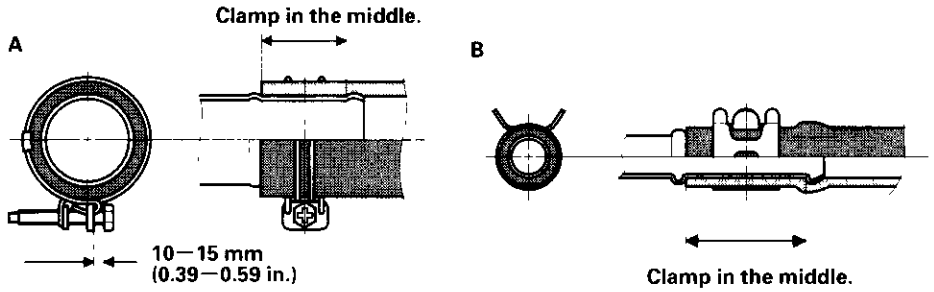

## Fuel Line/Quick-Connect Fittings Precautions

The fuel tube/quick-connect fittings assembly connects the in-tank fuel pump to the fuel feed line and the fuel return line. When removing or installing the fuel pump and fuel tank, it is necessary to disconnect or connect the quick-connect fittings.
Pay attention to the following:

- The fuel tubes (A) and quick-connect fittings (B) are not heat-resistant; be careful not to damage them during welding or other heat-generating procedures.
- The fuel tubes and quick-connect fittings are not acid-proof; do not touch it with a shop towel which was used for wiping battery electrolyte. Replace them if they came into contact with electrolyte or something similar.
- When connecting or disconnecting the fuel tubes and quick-connect fittings, be careful not to bend or twist them excessively. Replace them them damaged.

A disconnected quick-connect fittings can be reconnected, but the retainer on the mating line cannot be reused once it has been removed from the line. Replace the retainer when
- replacing the fuel pump.
- replacing the fuel filter.
- replacing the fuel feed line.
- replacing the fuel return line.
- it has been removed from the line.
- it is damaged.

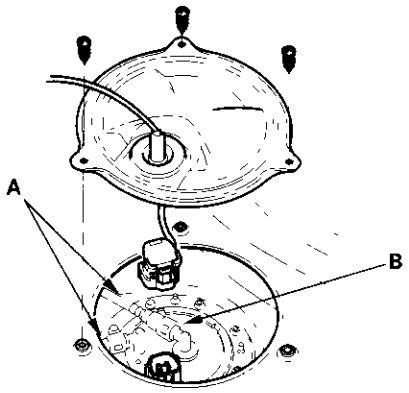


## Fuel Line/Quick-Connect Fittings Removal

1. Relieve fuel pressure (see page 11-105).
2. Check the fuel quick-connect fittings for dirt, and clean if necessary.
3. Hold the connector (A) with one hand, and squeeze the retainer tabs (B) with the other hand to release them from the locking pawls (C). Pull the connector off.

   NOTE:
   - Be careful not to damage the line (D) or other parts. Do not use tools.
   - If the connector does not move, keep the retainer tabs pressed down, and alternately pull and push the connector until it comes off easily.
   - Do not remove the retainer from the line; once removed, the retainer must be replaced with a new one.

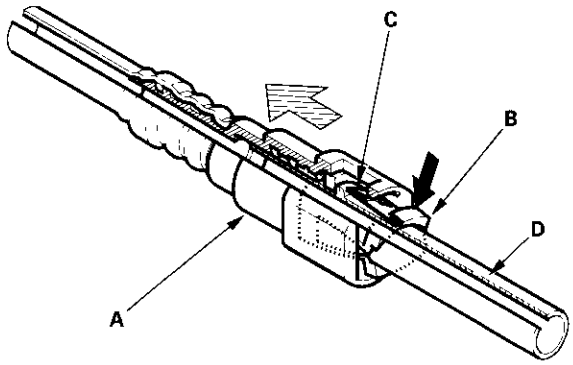

4. Check the contact area (A) of the line (B) for dirt and damage.
   - If the surface is dirty, clean it..
   - If the surface is rusty or damaged, replace the fuel pump, fuel filter, fuel feed line or fuel return line.

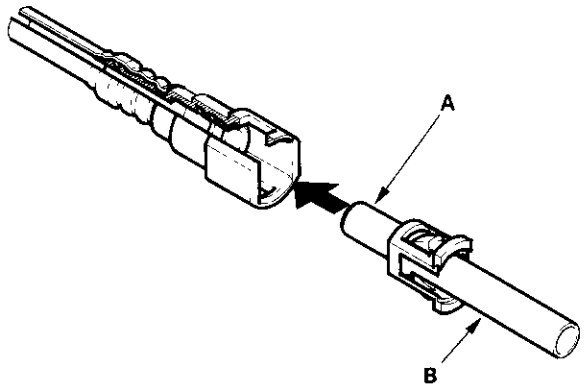


5. To prevent damage and keep foreign matter out, cover the disconnected connector and line end with plastic bags (A).

   NOTE:
   - The retainer cannot be reused once it has been removed from the pipe.
     Replace the retainer when
     - replacing the fuel pump.
     - replacing the fuel filter.
     - replacing the fuel feed line.
     - replacing the fuel return line.
     - it has been removed from the line.
     - it is damaged.

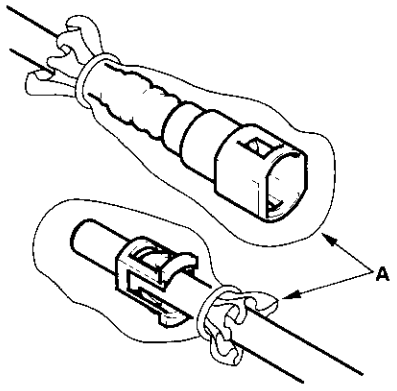


## Fuel Line/Quick-Connect Fittings Installation

1. Check the contact area (A) of the line (B) for dirt and damage, and clean if necessary.

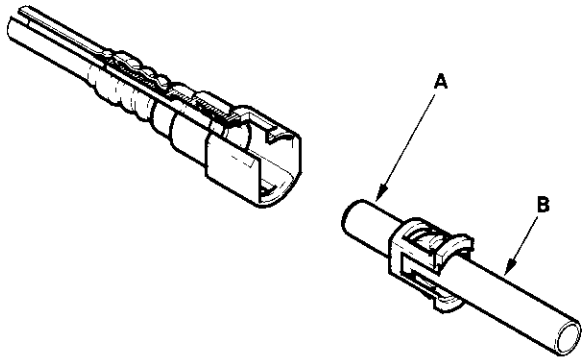


2. Insert a new retainer (A) into the connector (B) if the retainer is damaged, or after
   - replacing the fuel pump.
   - replacing the fuel filter.
   - replacing the fuel feed line.
   - replacing the fuel return line.
   - removing the retainer from the line.

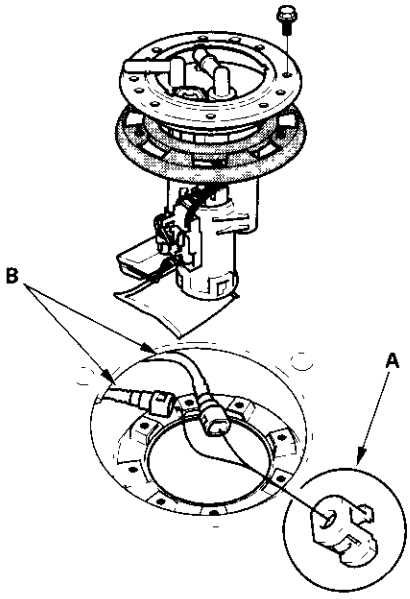


(cont'd)

## Fuel Line/Quick-Connect Fittings Installation (cont'd)

3. Before connecting a new fuel tube/quick-connect fitting assembly (A), remove the old retainer from the mating line.

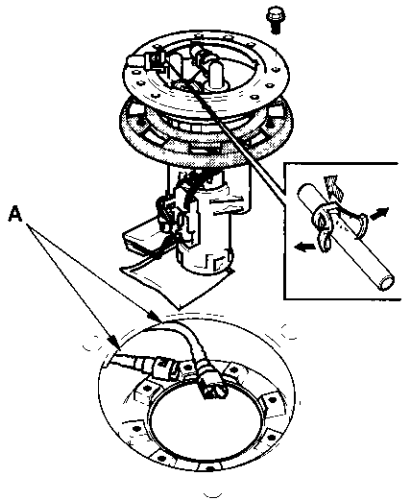


4. Align the quick-connect fittings with the line (A), and align the retainer (B) locking pawls with the connector (C) grooves. Then press the quick-connect fittings onto the line until both retainer pawls lock with a clicking sound.

   NOTE: If it is hard to connect, put a small amount of new engine oil on the line end.

   **Connection with new retainer:**

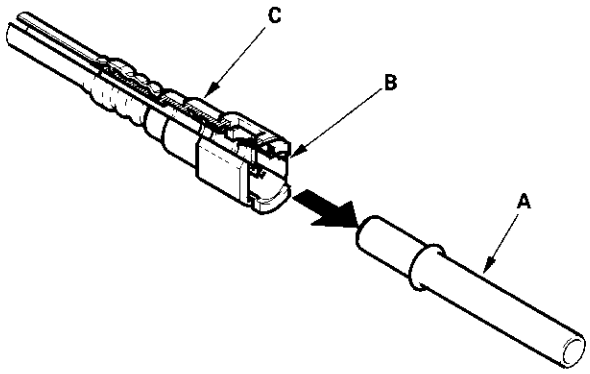


**Reconnection to existing retainer:**

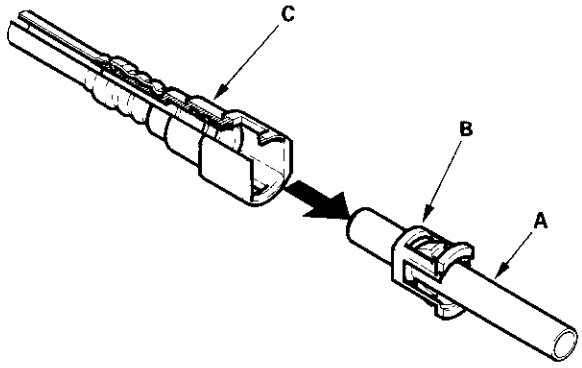


5. Make sure the connection is secure and that the pawls are firmly locked into place; check visually and by pulling the connector.

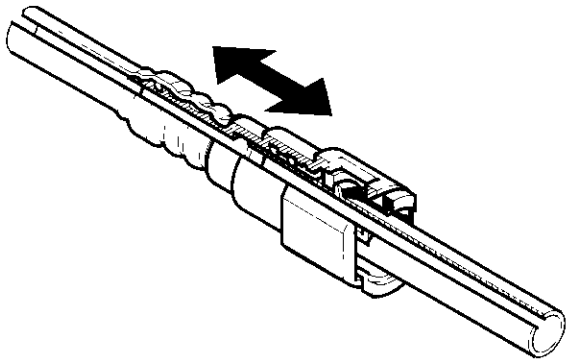

6. Reconnect the negative cable to the battery, and turn the ignition switch ON (II). The fuel pump will run for about 2 seconds, and fuel pressure will rise. Repeat 2 or 3 times, and check that there is no leakage in the fuel supply system.

## Fuel Pressure Regulator Replacement

1. Place a shop towel under the fuel pressure regulator, then relieve fuel pressure (see page 11-105).
2. Disconnect the vacuum hose and fuel return hose.
3. Remove the two 6 mm retainer bolts (A) and the fuel pressure regulator (B).

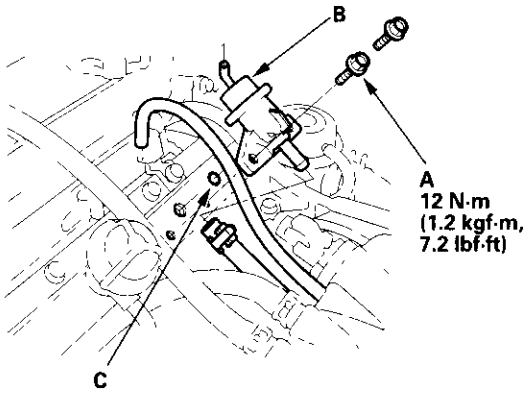


4. Apply clean engine oil to a new o-ring (C), and carefully install it into its proper position.
5. Install the fuel pressure regulator and the 6 mm retainer bolts.
6. Reconnect the vacuum hose and fuel return hose.
7. Turn the ignition switch ON (II), but do not operate the starter. After the fuel pump runs for about 2 seconds, the fuel pressure in the fuel line rises. Repeat this two or three times, then check whether there is any fuel leakage.

## Fuel Filter Replacement

The fuel filter should be replaced whenever the fuel pressure drops below the specified value (320 – 370 kPa, 3.3 – 3.8 kgf/cm², 47 – 54 psi with the fuel pressure regulator vacuum hose disconnected and pinched) after making sure that the fuel pump and the fuel pressure regulator are OK.

1. Remove the fuel tank unit (see page 11-114).
2. Remove the fuel filter (A).

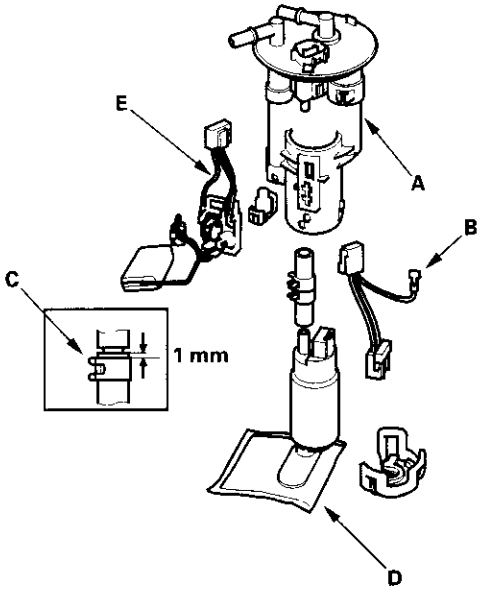


3. Install the part in the reverse order of removal with a new base gasket, then check these items:
   - When connecting the wire harness, make sure the connection is secure and the terminal (B) is firmly locked into the place.
   - Check that the tab of the clamp (C) does not interfere with the wire harness.
   - Do not push the lower part of the suction filter (D).
   - When installing the fuel gauge sending unit (E), make sure the connection is secure and the connector is firmly locked into place. Be careful not to bend or twist it excessively.

## Fuel Pump/Fuel Gauge Sending Unit Replacement

1. Remove the rear tray (see page 20-71).
2. Remove the access panel from the floor.
3. Turn the ignition switch OFF.
4. Disconnect the fuel pump 5P connector.
5. Remove the fuel fill cap.
6. Relieve the fuel pressure (see step 7 on page 11-103).
7. Disconnect the quick-connect fittings from the fuel pump.
8. Remove the bolts (A) and the fuel tank unit (B).

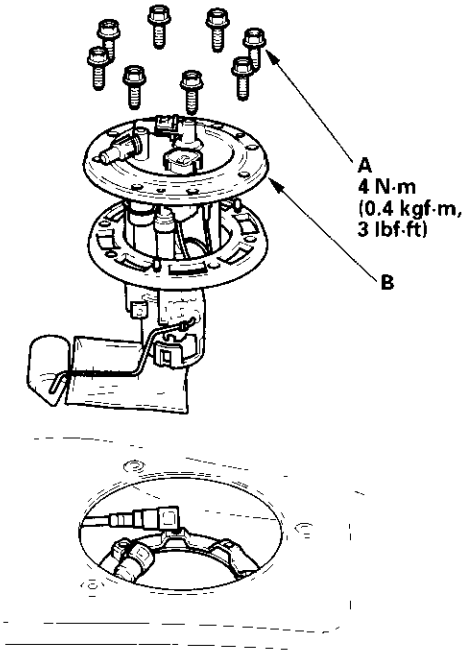


9. Remove the bracket (A), the fuel filter (B), the fuel gauge sending unit (C), the hose (D), and the wire harness (E).

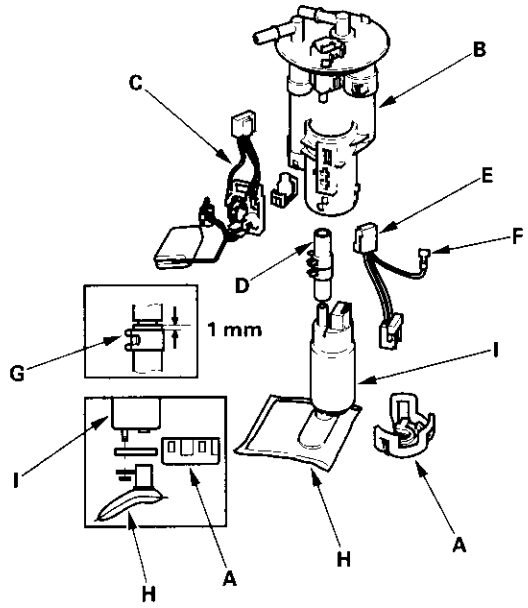


10. When connecting the fuel pump, make sure the connections are secure and the suction filter (H) is firmly connected the fuel pump (I).
11. Install the unit in the reverse order of removal with a new base gasket, then check these items:

    - When connecting the wire harness, make sure the connection is secure and the terminal (F) is firmly locked into the place.
    - Check that the tab of the clamp (G) does not interfere with the wire harness.
    - Do not push the lower part of the suction filter.
    - When installing the fuel gauge sending unit, make sure the connection is secure and the connector is firmly locked into place. Be careful not to bend or twist it excessively.
    - Check for fuel leaks.

# Fuel Tank Replacement

## Removal

1. Remove the fuel fill cap.
2. Relive the fuel pressure (see page 11-105).
3. Drain the fuel tank: Remove the fuel tank unit (see page 11-114). Using a hand pump, hose, and a container suitable for gasoline, draw the fuel from the fuel tank.
4. Remove the brake fluid from the master cylinder reservoir with a syringe.

   NOTE: Do not spill brake fluid on the vehicle; it may damage the paint; if brake fluid does contact the paint, wash it off immediately with water.
5. Remove the rear tray (see page 20-71).
6. Remove the access panel (A) from the floor, and disconnect the fuel tank 5P connector (B).

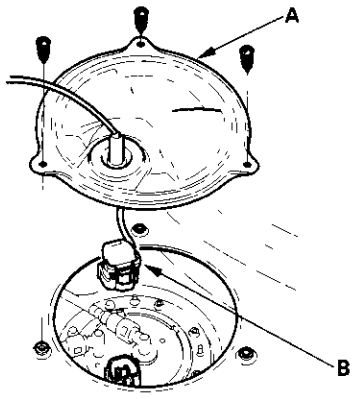


7. Disconnect both ABS rear wheel sensors 2P connectors (A), and push the connectors out (B).

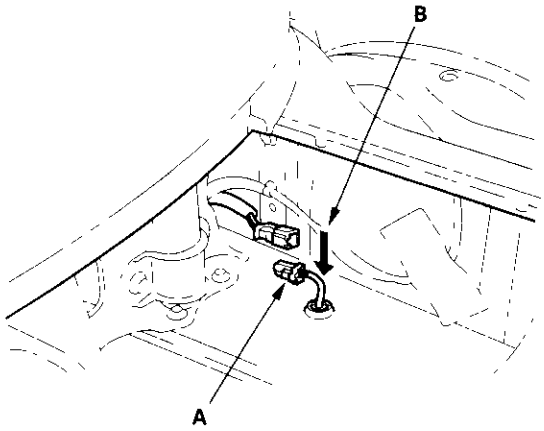


8. Remove the fuel pipe cover (A), and disconnect the fuel fill neck tube (B), the fuel tank vapor recirculation tube (C) and the fuel tank vapor signal tube (D) from the fuel fill pipes (E).

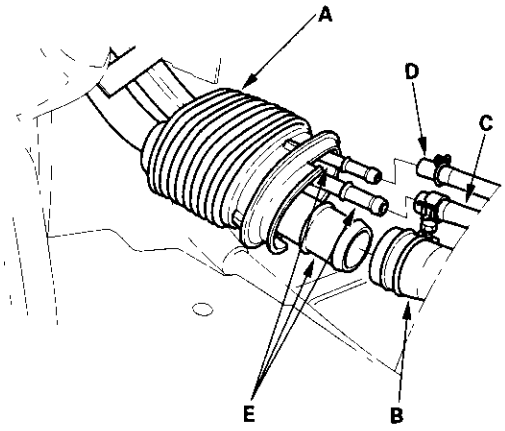


9. Loosen the rear wheel nuts slightly, then raise the vehicle and make sure it is securely supported.
10. Remove the rear wheels.

(cont'd)

## Fuel Tank Replacement (cont'd)

11. Remove the bolts from both ABS rear wheel sensor harness brackets (A).

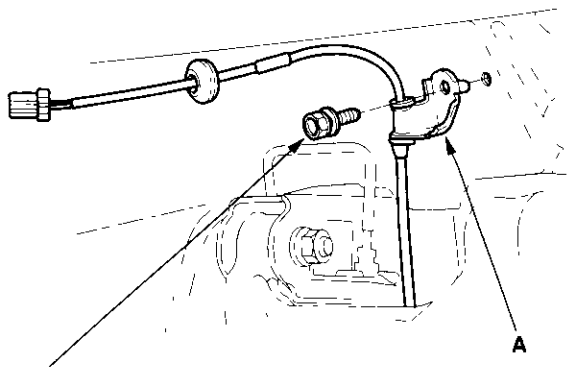


NOTE: Left side is shown.

12. Remove both caliper shields (A).

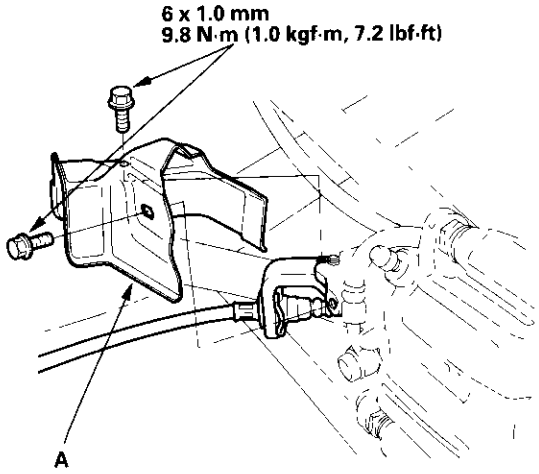


NOTE: Left side is shown.

13. Disconnect both parking brake cables (A), and move them out of the way.

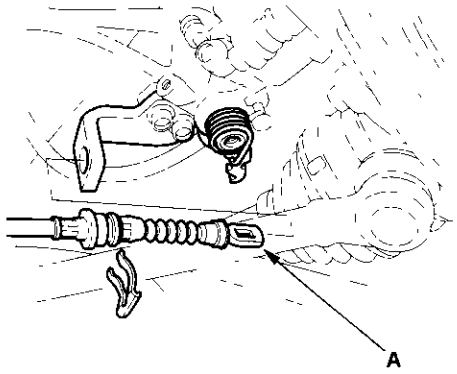


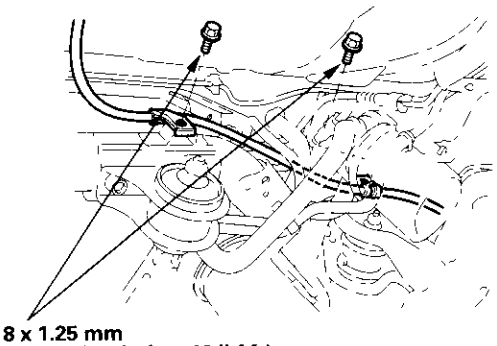


NOTE: Left side is shown.

14. Disconnect the brake hoses from both rear brake lines using a 10 mm flare-nut wrench.

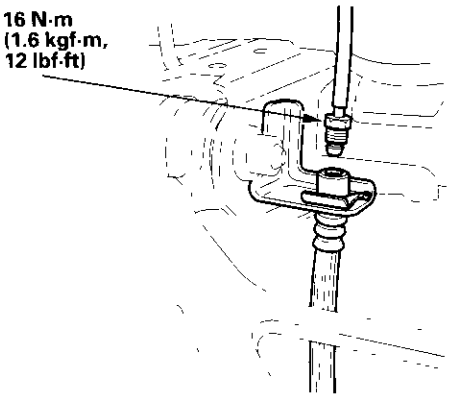


NOTE: Left side is shown.

15. Remove the flange bolt (A) from both rear dampers (B).

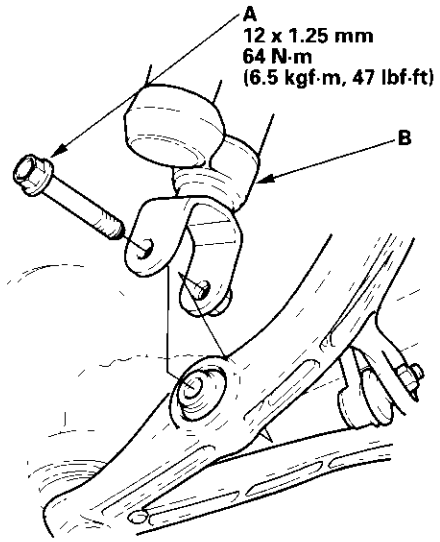


NOTE: Left side is shown.

16. Remove the canister cover (A), rear suspension stiffener (B), and the propeller shaft (C) (see page 16-17).

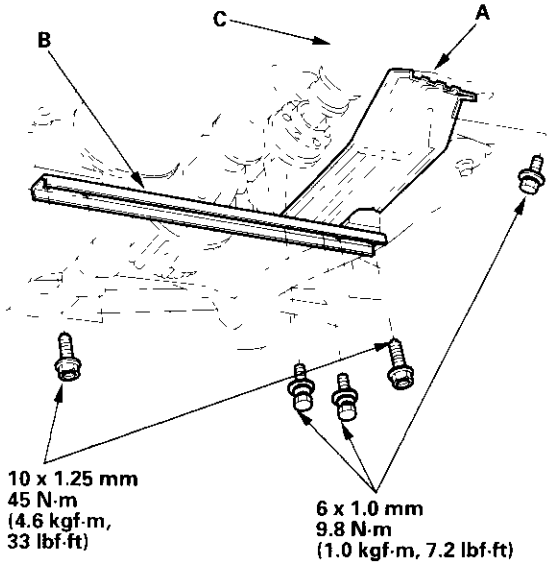


17. Remove the muffler (A).

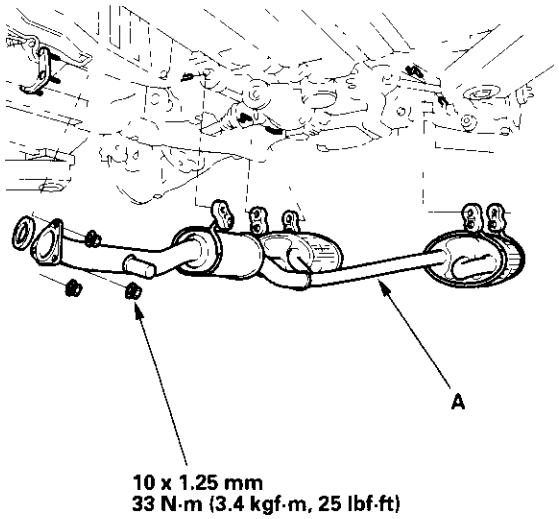


18. Disconnect the quick-connect fittings (A) (see page 11-110).

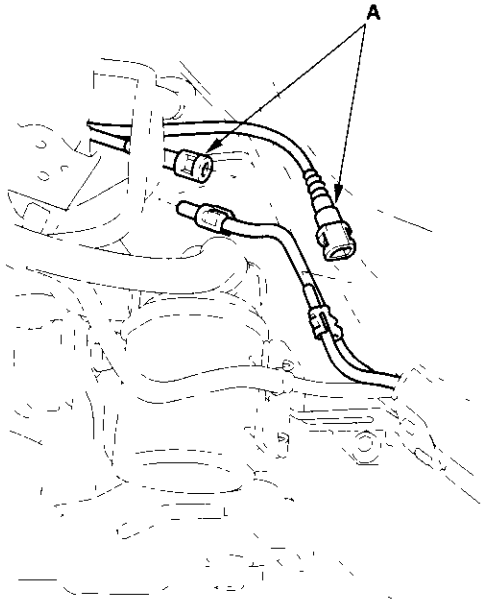


(cont'd)

## Fuel Tank Replacement (cont'd)

19. Disconnect the fuel tank vapor vent tube (A), then remove the bolt (B) and the EVAP canister (C).

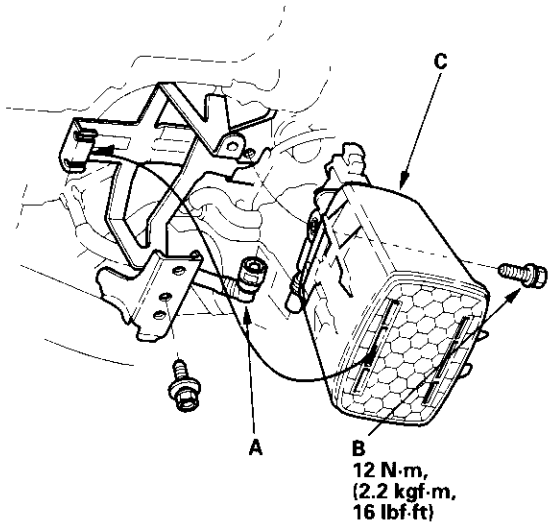


20. Disconnect the hose (A) and fuel vent tube (B), then remove the fuel tank vapor vent tube from the tube holder (C). Remove the bolts (D) and the fuel vent assembly (E).

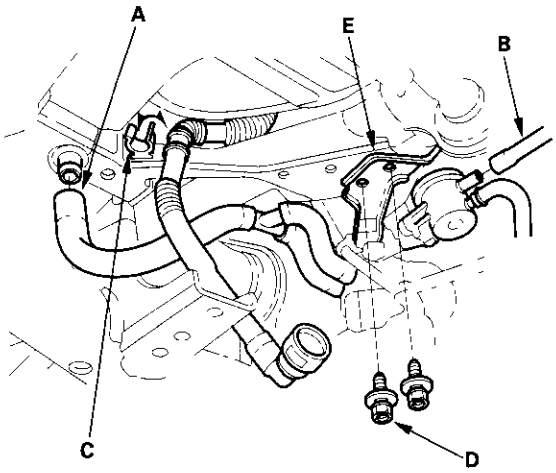


21. Place a jack or other support under the rear suspension subframe (A). Remove the mounting bolts (B) and the rear suspension subframe (A).

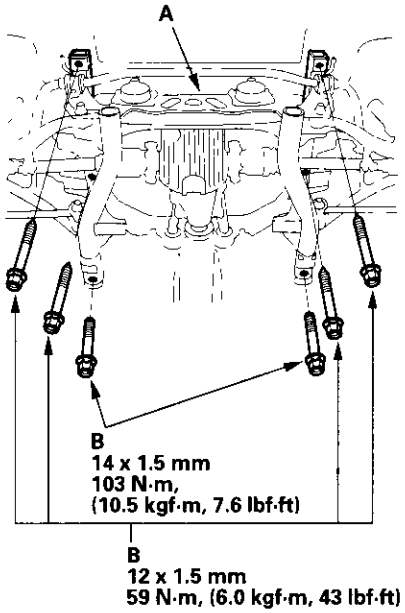


22. Place the jack or support under the fuel tank (A) and remove the mounting bolts (B) and the fuel tank.

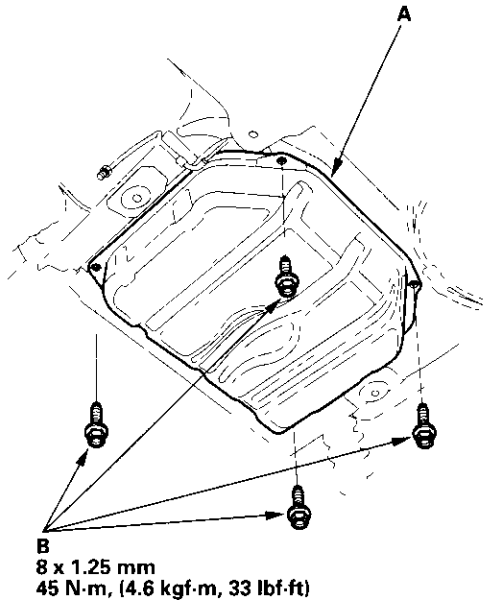

## Installation

1. Install the fuel tank in the reverse order of removal.
2. After installing, bleed the brake system (see page 19-8), and adjust the wheel alignment (see page 18-5).
3. Check for fuel leaks.

# Fuel Gauge Sending Unit Test

NOTE: For the fuel gauge system circuit diagram, refer to the Gauges Circuit Diagram (see page 22-44).

1. Check the No. 5 INSTRUMENT LIGHT BACK UP LIGHT (7.5 A) fuse in the under-dash fuse/relay box.
   - If the fuse is OK, check for an open in the YEL wire between the gauge assembly and the No. 5 INSTRUMENT LIGHT BACK UP LIGHT (7.5 A) fuse.
   - If the fuse is blown, replace it, and check for an open in the YEL wire between the gauge assembly and the No. 5 INSTRUMENT LIGHT BACK UP LIGHT (7.5 A) fuse.
2. Remove the rear tray (see page 20-71).
3. Remove the access panel from the floor.
4. Disconnect the fuel pump 5P connector.
5. Measure voltage between fuel pump 5P connector terminals No. 1 and No. 2 with the ignition switch ON (II). There should be about 5 to 8 V.
   - If the voltage is as specified, go to step 6.
   - If the voltage is not as specified, check for:
     - an open or short in the YEL/BLK or BLK wire.
     - poor ground (G601).
     - a faulty main printed circuit board in the gauge assembly.

**FUEL PUMP 5P CONNECTOR**

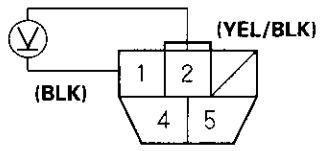


Wire side of female terminals

(cont'd)

## Fuel Gauge Sending Unit Test (cont'd)

6. Turn the ignition switch OFF.

7. Remove the bolts and the fuel tank unit (see page 11-114).

8. Measure the resistance between the No. 1 and No. 2 terminals with the float at E (EMPTY), LOW (LOW FUEL INDICATOR LIGHT IS ON), 1/2 (HALF FULL) and F (FULL) positions.
If you do not get the following readings, replace the fuel gauge sending unit.

| Float Position | Resistance (Ω) | Height (mm) (in.) |
|---|---|---|
| F | 11–13 | 82.9 ± 1.9 (3.26 ± 0.0748) |
| 1/2 | 52–58 | 154.2 ± 1.2 (6.07 ± 0.0472) |
| LOW | 114.4–120.4 | 215.5 (8.48) |
| E | 130–132 | 222.8 ± 1.9 (8.77 ± 0.0748) |

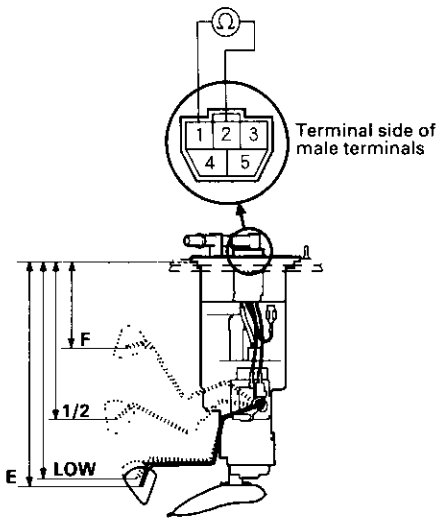


9. To prevent the fuel pump from running, remove the No. 2 FUEL PUMP SRS (15 A) fuse from the under-dash fuse/relay box.

10. Connect the fuel pump 5P connector.

11. Turn the ignition switch ON (II) with the float at F (FULL) position.

    - If the fuel gauge indicates "F", the system is OK.
    - If the fuel gauge does not indicate "F", replace the gauge assembly.

## Low Fuel Indicator Test

1. Do the fuel gauge sending unit test (see page 11-119).

    - If the system is OK, go to step 2.
    - If the system has any malfunction, repair it.

2. Turn the ignition switch ON (II) with the float at E (EMPTY) position.

    - If the low fuel indicator is on, go to step 3.
    - If the low fuel indicator is not on, refer to the low fuel indicator Circuit Diagram (see page 22-47) and check the circuit.

3. Lift the float above LOW position.

    - If the low fuel indicator goes off, the system is OK.
    - If the low fuel indicator is still on, refer to the low fuel indicator Circuit Diagram (see page 22-47) and check the circuit.

## Component Location Index

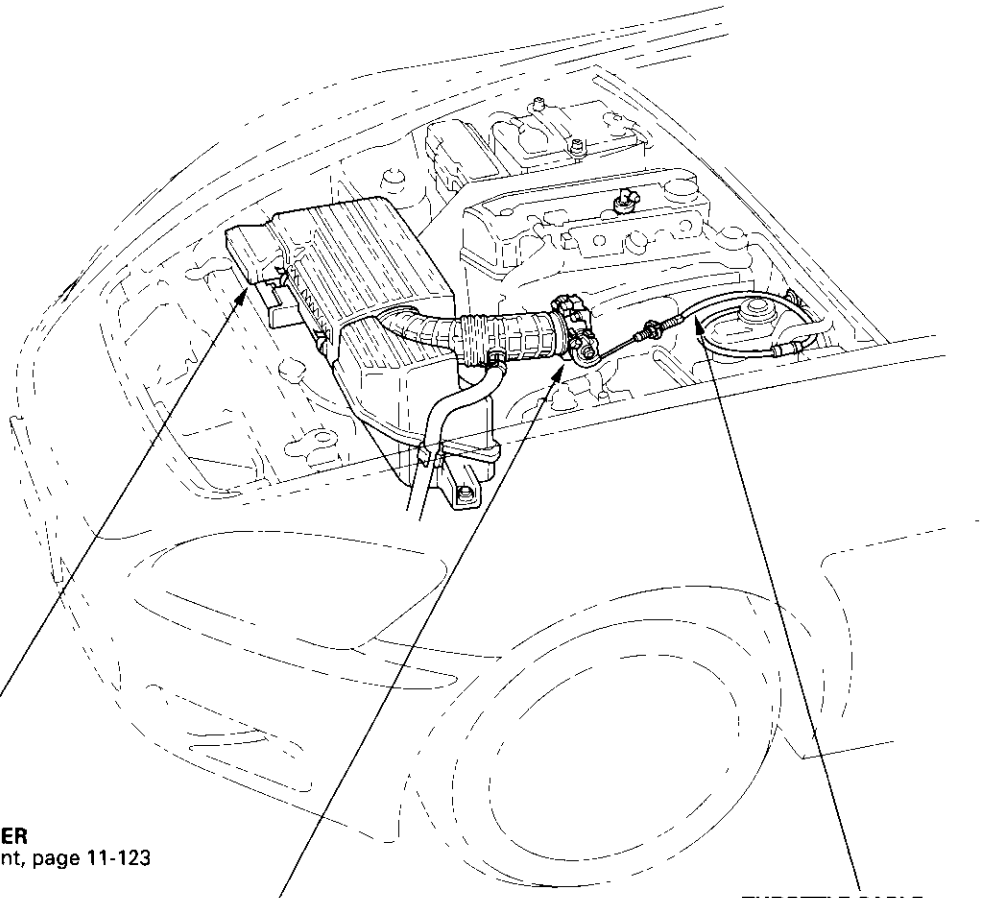

**AIR CLEANER**
Replacement, page 11-123

**THROTTLE CABLE**
Adjustment, page 11-124
Removal/Installation, page 11-125

**THROTTLE BODY**
Test, page 11-122
Removal/Installation, page 11-126
Disassembly/Reassembly, page 11-127

## Throttle Body Test

NOTE: Do not adjust the throttle stop screw. It is preset at the factory.

1. With the engine off, check the throttle cable operation.The cable should operate without binding or sticking.

   - If the cable operates OK, go to step 2.
   - If the cable binds or sticks, check it and its routing. If it's faulty, reroute it or replace it and adjust it (see page 11-124), then go to step 2.

2. Operate the throttle lever by hand to see if the throttle valve and/or shaft are too loose or too tight.

   - If there is excessive play in the throttle valve shaft, or any binding in the throttle valve at the fully closed position, replace the throttle body.
   - If the throttle valve and shaft are OK, go to step 3.

3. Check for clearance (A) between the throttle stop screw (B) and the throttle lever (C) at the fully closed position. If there is any clearance, replace the throttle body (see page 11-126). Do not adjust the throttle stop screw.

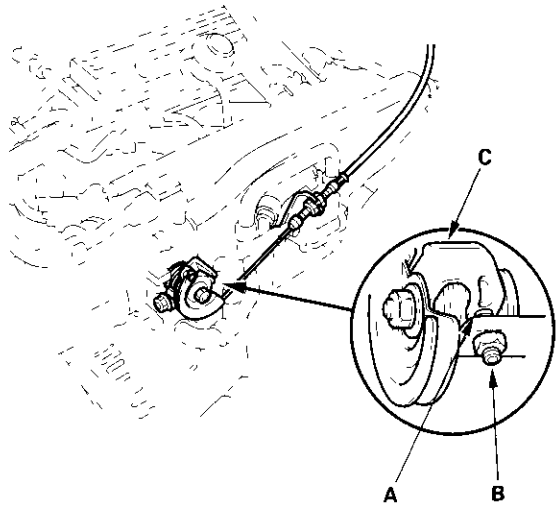

## Air Cleaner Element Replacement

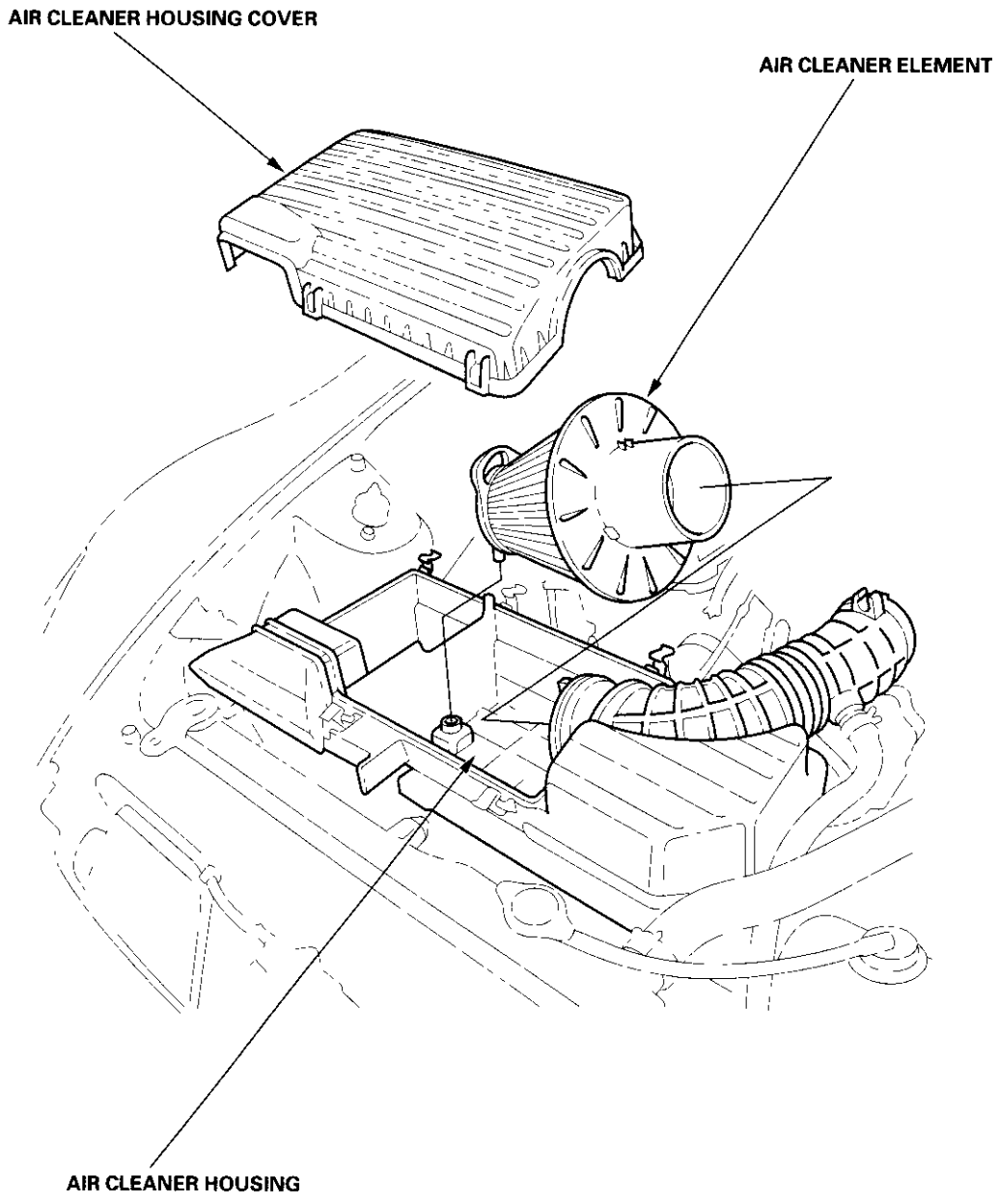

## Throttle Cable Adjustment

1. Check cable free play at the throttle linkage. Cable free play (A) should be 4 – 6 mm (3/16 – 1/4 in.).

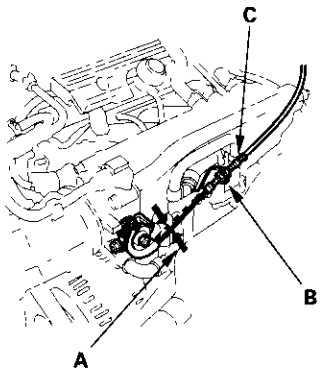


2. If free play (A) is not within spec (4 – 6 mm, 3/16 – 1/4 in.) loosen the locknut (B), turn the adjusting nut (C) until the free play (A) is as specified, then retighten the locknut (B).

3. With the cable properly adjusted, check the throttle valve to be sure it opens fully when you push the accelerator pedal to the floor. Also check the throttle valve to be sure it returns to the idle position whenever you release the accelerator pedal.

## Throttle Cable Removal/Installation

1. Fully open the throttle valve, then remove the throttle cable (A) from the throttle link (B).

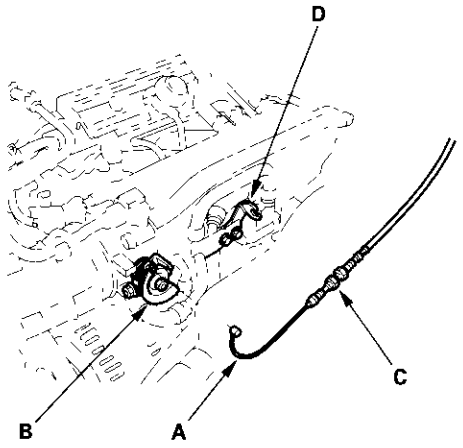


2. Remove the cable housing (C) from the cable bracket (D).

3. Remove the nuts (A), then remove the accelerator pedal (B) along with the throttle cable (C) and the actuator cable (D).

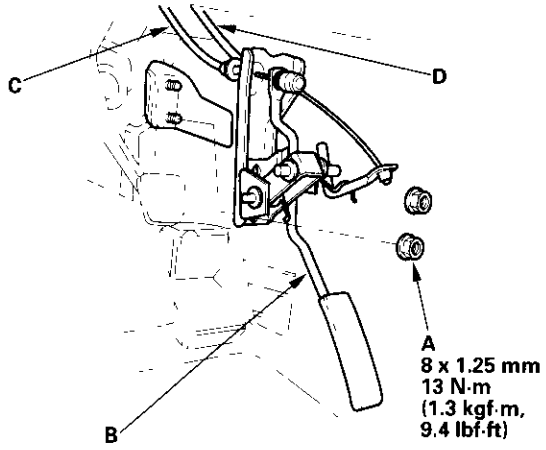


4. Pull the throttle cable (C) and the actuator cable (D) out toward the passenger compartment.

5. Remove the throttle cable (A) and the actuator cable (B) from the accelerator pedal bracket (C).

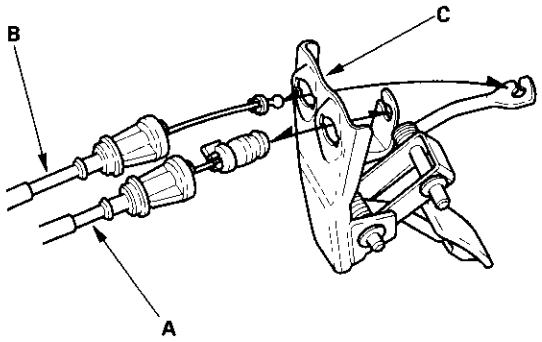


6. Install in the reverse order of removal.

7. After installing, start the engine. Hold the engine at 3,000 rpm with no load (in neutral) until the radiator fan comes on, then let it idle.

8. Hold the cable sheath, removing all slack from the cable.

9. Turn the adjusting nut (A) until it is 3 mm (1/8 in.) away from the cable bracket (B).

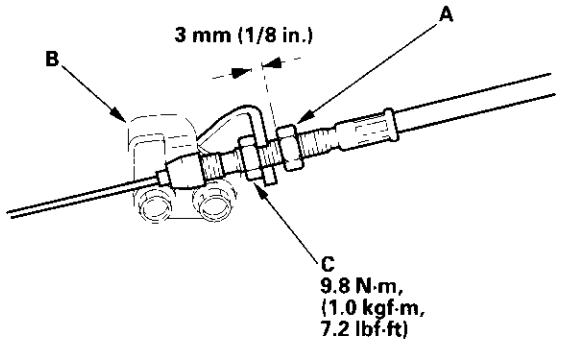


10. Tighten the locknut (C). The cable free play should now be 4 – 6 mm (3/16 – 1/4 in). If free play is not within specs, loosen the locknut, turn the adjusting nut until the free play is as specified, then retighten the locknut.

11. With the cable properly adjusted, check the throttle valve to be sure it opens fully when you push the accelerator pedal to the floor. Also check the throttle valve to be sure it returns to the idle position whenever you release the accelerator pedal.

## Throttle Body Removal/Installation

NOTE:
- Do not adjust the throttle stop screw.
- After reassembly, adjust the cruise control actuator cable (see page 4-46), and the throttle cable (see page 11-124).
- The TP sensor is not removable.

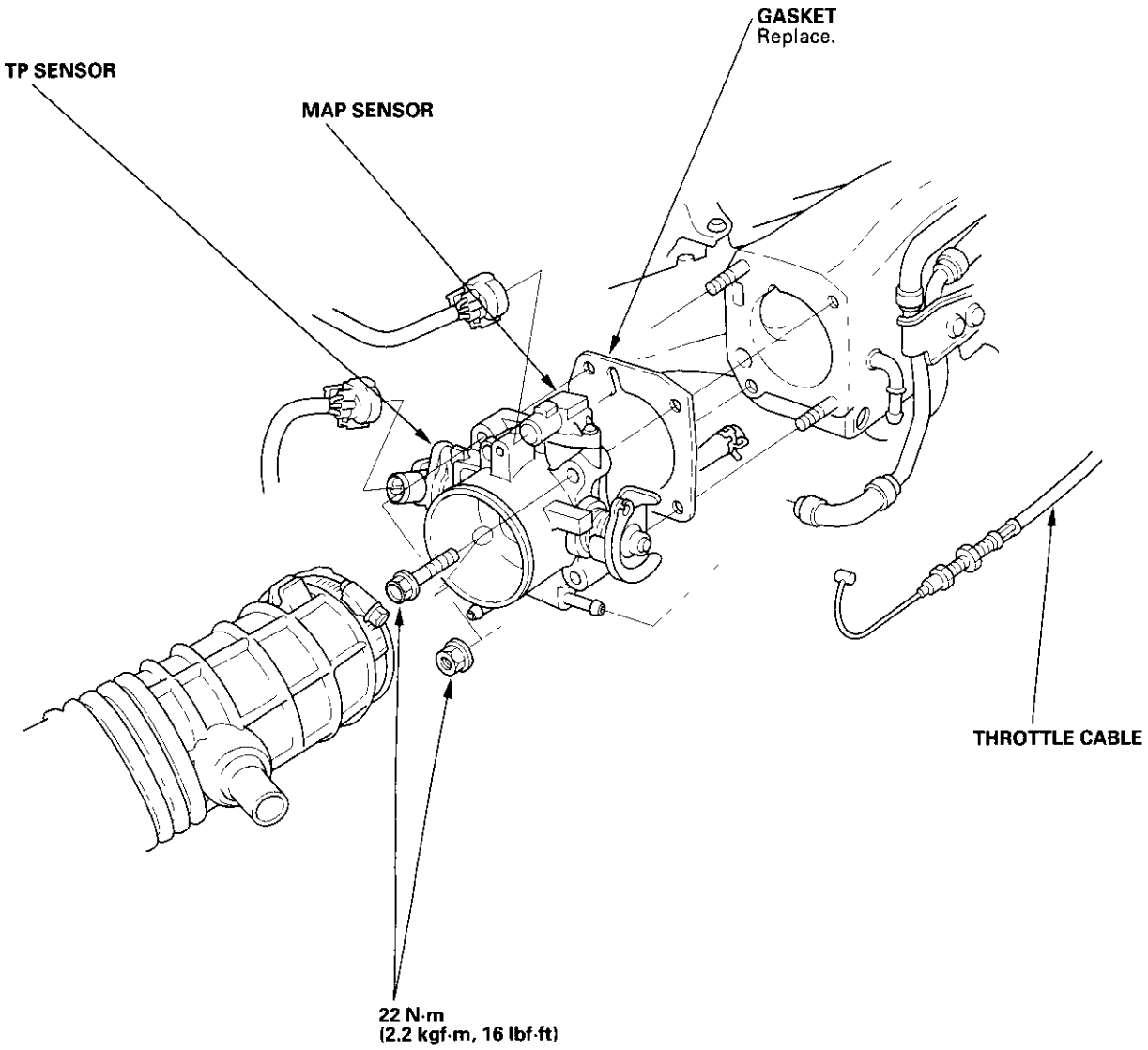

## Throttle Body Disassembly/Reassembly

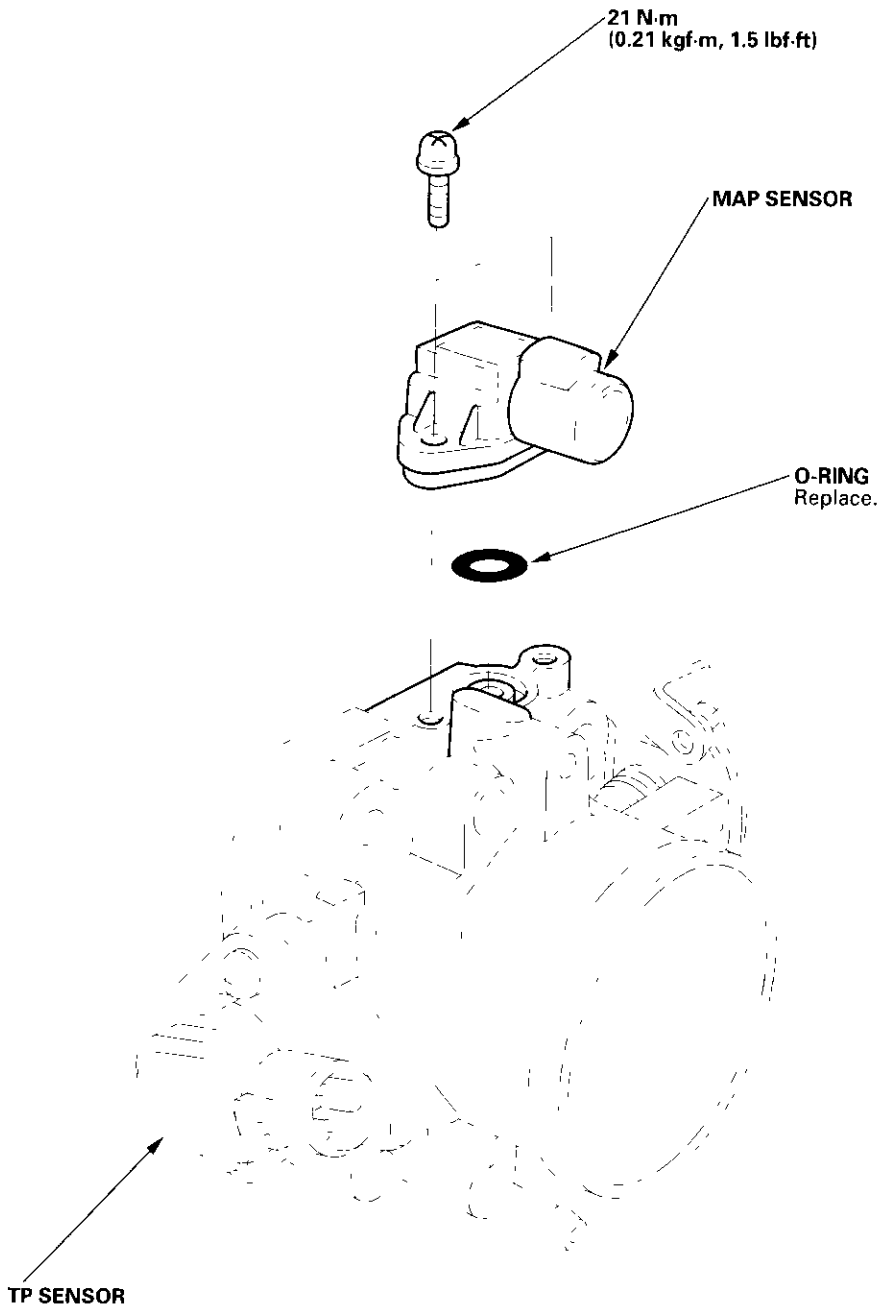

## DTC Troubleshooting

### **DTC P0420:** Catalytic System Efficiency Below Threshold

NOTE: If some of the DTCs listed below are stored at the same time as DTC P0420, troubleshoot those DTCs first, then recheck for DTC P0420.

P0137, P0138: Secondary Heated Oxygen Sensor (secondary HO2S) (Sensor 2)
P0141: Secondary HO2S (Sensor 2) heater

1. Reset the ECM (see page 11-4), then continue to steps 2 through 5 to reset the readiness code.
2. Start the engine. Hold the engine at 3,000 rpm with no load (in neutral) until the radiator fan comes on.
3. Drive on a highway for about 10 minutes without stopping. Your speed can vary.
4. With the transmission in 4th gear, drive at a steady speed between 50—62 mph (80—100 km/h) for 30 seconds.
5. Repeat step 4 three times. Between each repetition, close the throttle completely for 1—2 seconds. If the engine is stopped during this part of the procedure, go to step 3 and do the procedure again.
6. Check for a Temporary DTC with the scan tool.

   *Does the scan tool indicate Temporary DTC P0420?*

   **YES**—Check the three way catalytic converter (TWC). If necessary, replace the TWC.■

   **NO**—Check for readiness code completion. If the readiness is complete, it was a intermittent failure, system is OK at this time. If the readiness is incomplete, repeat steps 2 through 5.■

## PCV Valve Inspection and Test

1. Check the PCV valve (A), hoses (B), and connections for leaks or restrictions.

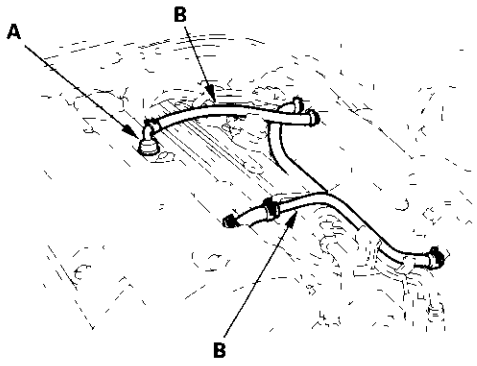


2. At idle, make sure there is a clicking sound from the PCV valve when the hose between the PCV valve and intake manifold is lightly pinched (A) with your fingers or pliers.
   If there is no clicking sound, check the PCV valve grommet for cracks or damage. If the grommet is OK, replace the PCV valve and recheck.

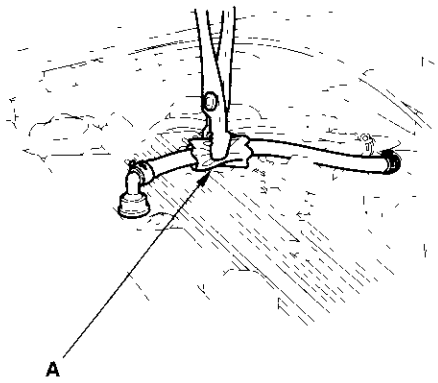

## Component Location Index

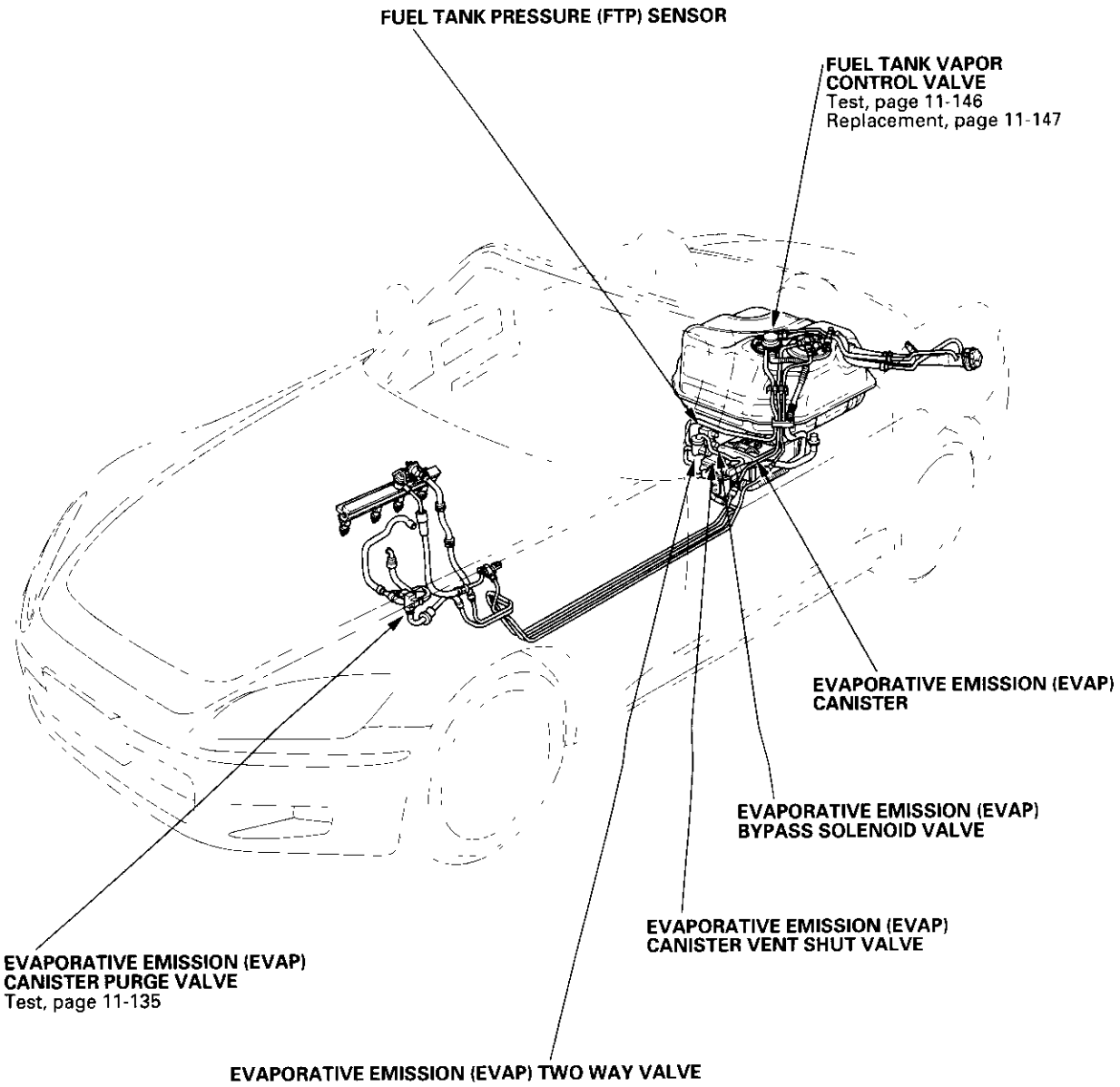

## DTC P0451: FTP Sensor Range/Performance Problem

**Special Tools Required**
Vacuum Pump/Gauge, 0—30 in. Hg A973X-041-XXXXX

1. Remove the fuel fill cap.
2. Turn the ignition switch ON(II).
3. Monitor FTP sensor voltage with the Honda PGM Tester, or measure voltage between ECM connector terminals A29 and C18.

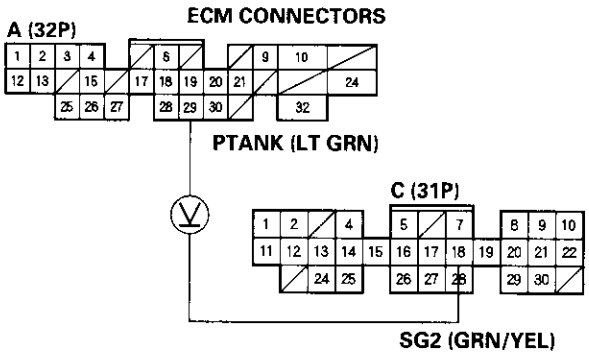


Wire side of female terminals

*Is there about 2.5 V?*

**YES** — Go to step 4.

**NO** — Replace the FTP sensor. ■

4. Turn the ignition switch OFF.
5. Disconnect the hose between the EVAP two way valve and the FTP sensor at the EVAP two way valve end.

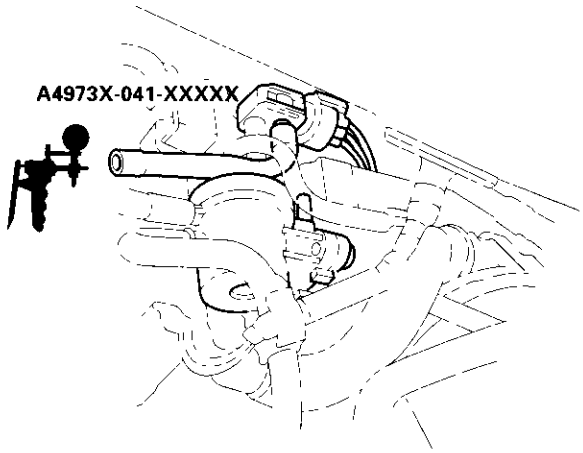


6. Connect a vacuum pump to the open end of the hose.
7. Turn the ignition switch ON (II).
8. Monitor FTP sensor voltage with the Honda PGM Tester, or measure voltage between ECM connector terminals A29 and C18, and very slowly to squeeze the vacuum pump.
9. The voltage should smoothly drop from about 2.5 V down to about 1.5 V. Stop applying vacuum when the voltage drops to about 1.5 V or damage to the FTP sensor may occur.

*Does the voltage drop to about 1.5 V and hold?*

**YES** — Intermittent failure, system is OK at this time. Check for poor connections at the FTP sensor and the ECM. ■

**NO** — Replace the FTP sensor. ■

## DTC Troubleshooting (cont'd)

### DTC P0452: FTP Sensor Circuit Low Voltage

1. Check the vacuum lines of the FTP sensor for misrouting, leakage, breakage, and clogging.

   *Are the vacuum lines OK?*

   **YES** Go to step 2.

   **NO** – Repair or replace vacuum lines as necessary. ■

2. Reset the ECM (see page 11-4).

3. Remove the fuel fill cap.

4. Turn the ignition switch ON (II).

5. Monitor FTP sensor voltage with the Honda PGM Tester, or measure voltage between body ground and ECM connector terminal A29.

**ECM CONNECTOR A (32P)**

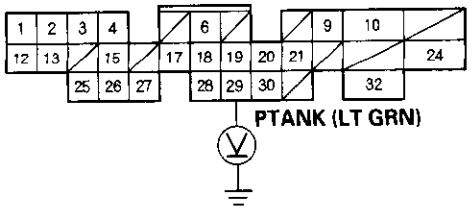


Wire side of female terminals

*Is there about 2.5 V?*

**YES** – Intermittent failure, system is OK at this time. Check for poor connections or loose terminals at the FTP sensor and at the ECM. ■

**NO** – Go to step 6.

6. Turn the ignition switch OFF.

7. Reinstall the fuel fill cap.

8. Disconnect the FTP sensor 3P connector.

9. Turn the ignition switch ON (II).

10. Measure voltage between FTP sensor 3P connector terminals No. 1 and No. 2.

**FTP SENSOR 3P CONNECTOR**

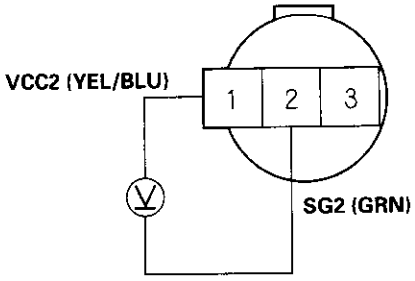


Wire side of female terminals

*Is there about 5 V?*

**YES** – Go to step 11.

**NO** – Repair open in the wire between the FTP sensor and the ECM (C28). ■

11. Measure voltage between FTP sensor 3P connector terminals No. 2 and No. 3.

**FTP SENSOR 3P CONNECTOR**

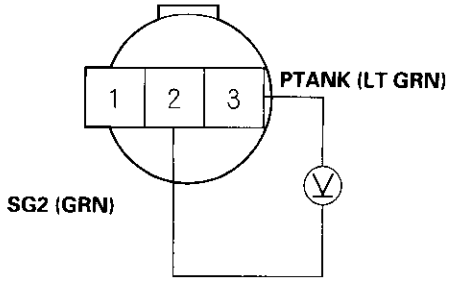


Wire side of female terminals

*Is there about 5 V?*

**YES** – Replace the FTP sensor. ■

**NO** – Go to step 12.

12. Turn the ignition switch OFF.
13. Disconnect ECM connector A (32P).
14. Check for continuity between FTP sensor 3P connector terminal No. 3 and body ground.

**FTP SENSOR 3P CONNECTOR**

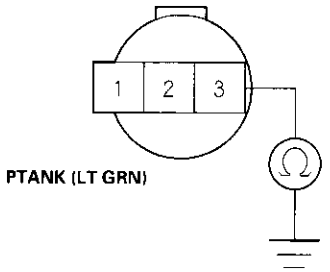


Wire side of female terminals

*Is there continuity?*

**YES** – Repair short in the wire between the FTP sensor and the ECM (A29). ■

**NO** – Substitute a known-good ECM and recheck (see page 11-5). If the FTP sensor reading are now normal, replace the original ECM. ■

## **DTC P0453:** FTP Sensor Circuit High Voltage

1. Check the vacuum lines of the FTP sensor for misrouting, leakage, breakage, and clogging.

   *Are the vacuum lines OK?*

   **YES** – Go to step 2.

   **NO** – Repair or replace vacuum lines as necessary. ■

2. Reset the ECM (see page 11-4).
3. Remove the fuel fill cap.
4. Turn the ignition switch ON (II).
5. Monitor FTP sensor voltage with the Honda PGM Tester, or measure voltage between body ground and ECM connector terminal A29.

**ECM CONNECTOR A (32P)**

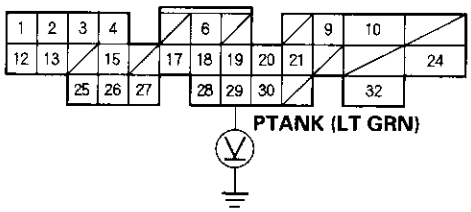


Wire side of female terminals

*Is there about 2.5 V?*

**YES** – Intermittent failure, system is OK at this time. Check for poor connections or loose terminals at the FTP sensor and at the ECM. ■

**NO** Go to step 6.

(cont'd)

## DTC Troubleshooting (cont'd)

6. Turn the ignition switch OFF.
7. Reinstall the fuel fill cap.
8. Disconnect the FTP sensor 3P connector.
9. Turn the ignition switch ON (II).
10. Measure voltage between FTP sensor 3P connector terminals No. 1 and No. 2.

FTP SENSOR 3P CONNECTOR

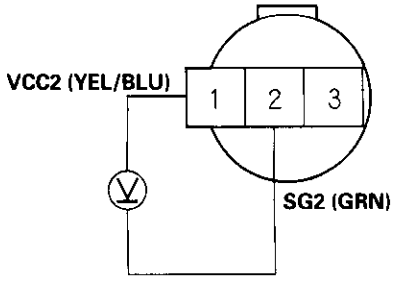


Wire side of female terminals

*Is there about 5 V?*

**YES** – Go to step 11.

**NO** – Repair open in the wire between the FTP sensor and the ECM (C18). ■

11. Measure voltage between FTP sensor 3P connector terminals No. 2 and No. 3.

FTP SENSOR 3P CONNECTOR

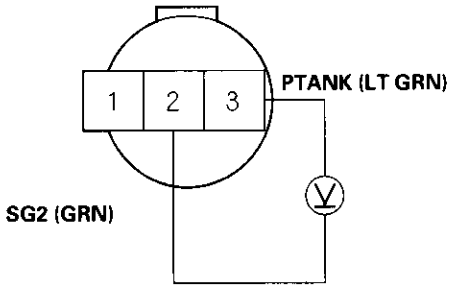


Wire side of female terminals

*Is there about 5 V?*

**YES** – Replace the FTP sensor. ■

**NO** – Go to step 12.

12. Measure voltage between ECM connector terminals A29 and C18.

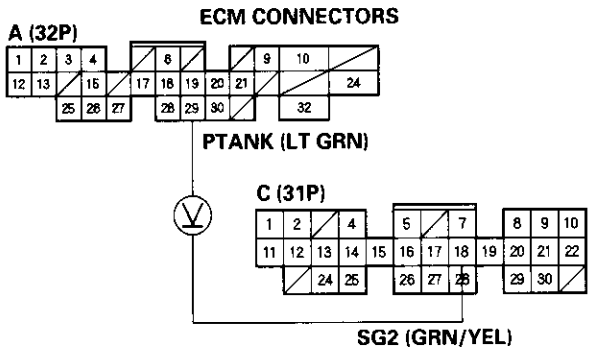


Wire side of female terminals

*Is there about 5 V?*

**YES** – Repair open in the wire between the FTP sensor and the ECM (A29). ■

**NO** – Substitute a known-good ECM and recheck (see page 11-5). If the FTP sensor readings are now normal, replace the original ECM. ■

## **DTC P1456:** EVAP Control System Leakage (Fuel Tank System)

**NOTICE**

The fuel system is designed to allow specified maximum vacuum and pressure conditions. Do not deviate from the vacuum and pressure tests as indicated in these procedures. Excessive pressure/vacuum would damage the EVAP components or cause eventual fuel tank failure.

**Special Tools Required**

Vacuum Pump/Gauge, 0 - 30 in. Hg A973X-041-XXXXX

This is a two-trip code; once cleared, it cannot be reproduced in one trip. Also, certain specific driving and ambient conditions must occur before the ECM will complate the system checks. additional test drives may still not meet the specific conditions needed to reproduce the code. If necessary, use the test drive procedures for setting the readiness code (see page 11-38).

Follow these troubleshooting procedures carefully to ensure the integrity of the system and to confirm the cause of the problem or code.

NOTE: Fresh fuel has a higher volatility that will create greater pressure/vacuum. The optimum condition for testing is fresh fuel, and must be less than a full tank of gas. If possible, to assist in leak detection, add 1 gallon of fresh fuel to the tank (as long as it will not fill the tank), just before starting these procedures.

**Fuel Fill Cap Check**

1. Check the fuel fill cap (the cap must say "If not tightened 3 clicks check engine light may come on").

   *Is the proper fuel fill cap installed and properly tightened?*

   **YES** – Go to step 2.

   **NO** – Replace or tighten the cap. ■

2. Check the fuel fill cap seal.

   *Is the fuel fill cap seal missing or damaged?*

   **YES** – Replace the fuel fill cap (gray or black colored cap). ■

   **NO** – The fuel fill cap is OK. Go to step 3.

**EVAP Canister Purge Valve Test**

3. Disconnect the vacuum hose from the EVAP purge joint (A), and connect a vacuum pump to the hose.

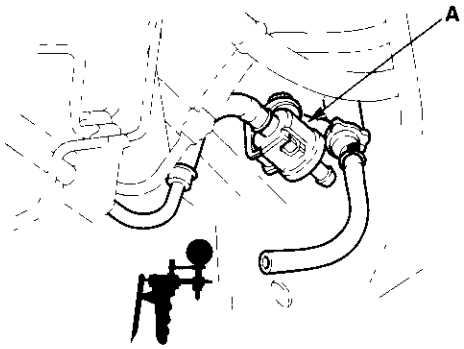


A973X-041-XXXXX

4. Turn the ignition switch ON (II).

5. Apply vacuum to the hose.

   *Does the valve hold vacuum?*

   **YES** – The EVAP canister purge valve is OK. Go to step 12.

   **NO** – Go to step 6.

6. Turn the ignition switch OFF.

7. Disconnect the EVAP canister purge valve 2P connector.

(cont'd)

## DTC Troubleshooting (cont'd)

8. Check for continuity between EVAP canister purge valve 2P connector terminal No. 2 and body ground.

**EVAP CANISTER PURGE VALVE 2P CONNECTOR**

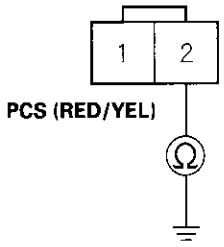


Wire side of female terminals

*Is there continuity?*

**YES** – Go to step 9.

**NO** – Replace the EVAP canister purge valve. ■

9. Disconnect ECM connector A (32P).

10. Check for continuity between EVAP canister purge valve 2P connector terminal No. 2 and body ground.

**EVAP CANISTER PURGE VALVE 2P CONNECTOR**

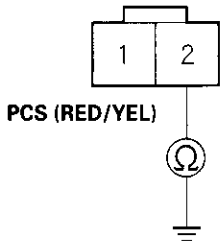


Wire side of female terminals

*Is there continuity?*

**YES** – Repair short in the wire between the EVAP canister purge valve and the ECM (A6). ■

**NO** – Substitute a known-good ECM and recheck (see page 11-5). If the symptom/indication goes away, replace the original ECM. ■

**EVAP Bypass Solenoid Valve Test**

11. Disconnect both vacuum hoses from the EVAP two way valve (A), and connect a vacuum pump to the canister port on the two way valve.

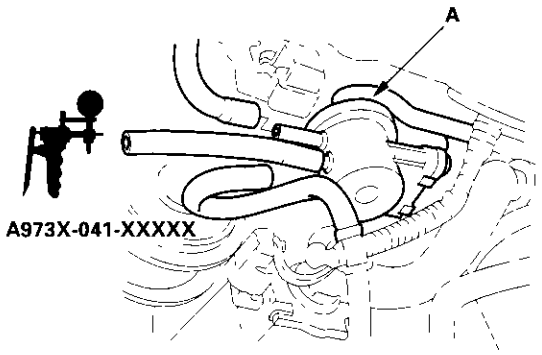


12. Connect ECM connecter terminal A3 to body ground with a jumper wire.

**ECM CONNECTOR A (32P)**

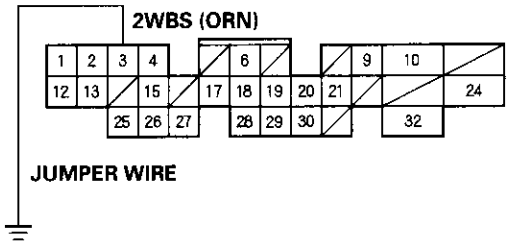


Wire side of female terminals

13. Turn the ignition switch ON (II).

14. Apply vacuum to the hose.

*Does the valve hold vacuum?*

**YES** – Go to step 15.

**NO** – Go to step 20.

15. Turn the ignition switch OFF.

16. Disconnect the EVAP bypass solenoid valve 2P connector.

17. Check for continuity between EVAP bypass solenoid valve 2P connector terminal No. 2 and body ground.

**EVAP BYPASS SOLENOID VALVE 2P CONNECTOR**

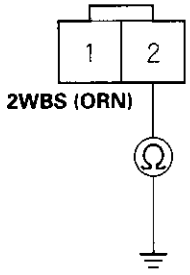


Wire side of female terminals

*Is there continuity?*

**YES** – Go to step 18.

**NO** – Repair open in the wire between the EVAP bypass solenoid valve and the ECM (A3). ■

18. Turn the ignition switch ON (II).

19. Measure voltage between EVAP bypass solenoid valve 2P connector terminal No. 1 and body ground.

**EVAP BYPASS SOLENOID VALVE 2P CONNECTOR**

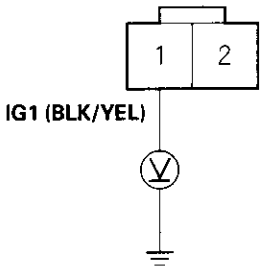


Wire side of female terminals

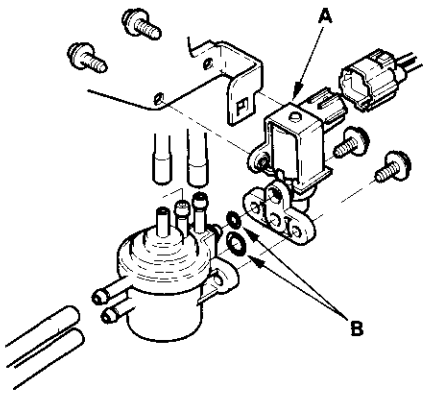


*Is there battery voltage?*

**YES** – Replace the EVAP bypass solenoid valve (A) and the o-rings (B). ■

**NO** – Repair open in the wire between the EVAP bypass solenoid valve and No. 6 ACG (15 A) fuse. ■

(cont'd)

## DTC Troubleshooting (cont'd)

20. Plug the upper port (A) of the EVAP two way valve.

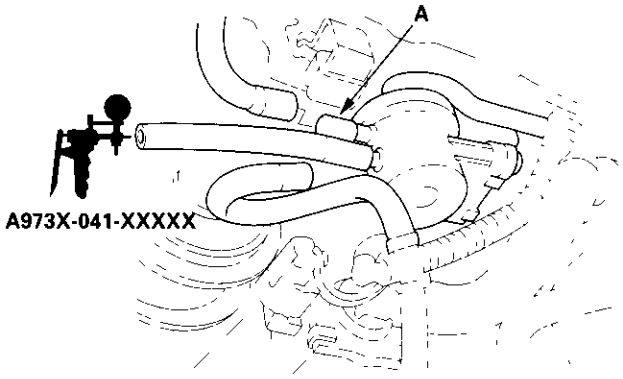


21. While monitoring FTP sensor voltage with the Honda PGM Tester, or measuring the voltage between ECM connector terminals A29 and C18, slowly pump the vacuum pump until the voltage drops to about 1.5 volts.

    *Does the voltage drop to 1.5 V and hold for at least 20 seconds?*

    **YES** – The EVAP bypass solenoid valve/EVAP two way valve is OK. Go to step 22.

    **NO** – Repair leak from the EVAP bypass solenoid valve, EVAP two way valve, FTP sensor ,or o-rings. ■

**EVAP Canister Vent Shut Valve Test**

22. Disconnect the vacuum hose from the EVAP canister filter, and connect a vacuum pump to the hose.

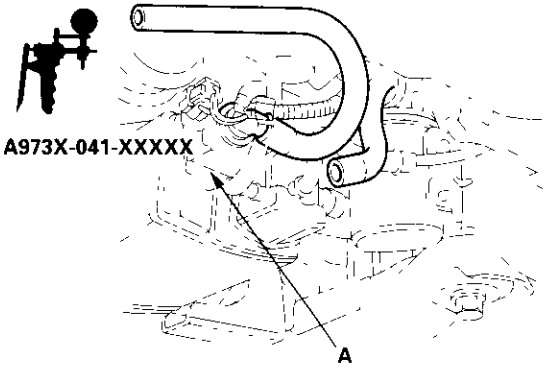


23. Turn the ignition switch ON (II).

24. Apply vacuum to the hose with 5 strokes of the pump.

    *Does the valve hold vacuum?*

    **YES** – Go to step 25.

    **NO** – The EVAP canister vent shut valve is OK. Go to step 30.

25. Turn the ignition switch OFF.

26. Disconnect the EVAP canister vent shut valve 2P connector.

27. Check for continuity between EVAP canister vent shut valve 2P connector terminal No. 2 and body ground.

**EVAP CANISTER VENT SHUT VALVE 2P CONNECTOR**

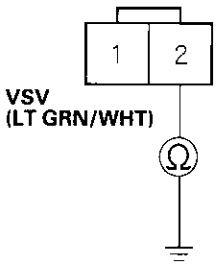


Wire side of female terminals

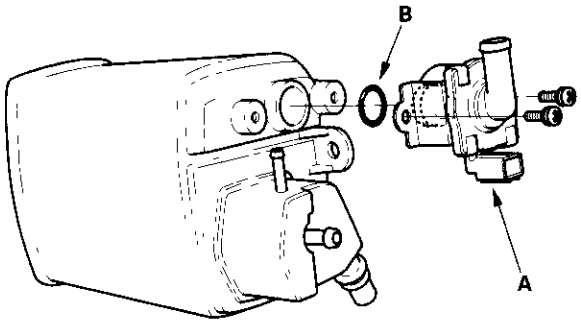


*Is there continuity?*

**YES** – Go to step 28.

**NO** – Replace the EVAP canister vent shut valve (A) and o-ring (B). ■

28. Disconnect ECM connector A (32P).

29. Check for continuity between EVAP canister vent shut valve 2P connector terminal No. 2 and body ground.

**EVAP CANISTER VENT SHUT VALVE 2P CONNECTOR**

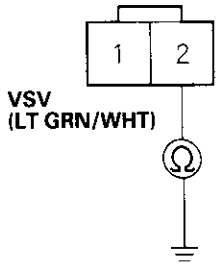


Wire side of female terminals

*Is there continuity?*

**YES** – Repair short in the wire between the EVAP canister vent shut valve and the ECM (A4) ■.

**NO** – Substitute a known-good ECM and recheck (see page 11-5). If the symptom/indication goes away, replace the original ECM. ■

**Vacuum Hoses and Connections Test**

30. Perform the fuel tank vapor control valve test (see page 11-4).

*Is the fuel tank vapor control valve OK?*

**YES** – Go to step 31.

**NO** – Replace the fuel tank vapor control valve. ■

31. Tighten the fuel cap 3 "clicks", then monitor the FTP readings with the Honda PGM Tester.

32. Start the engine, and let it idle for 5 minutes.

33. Check the FTP sensor reading.

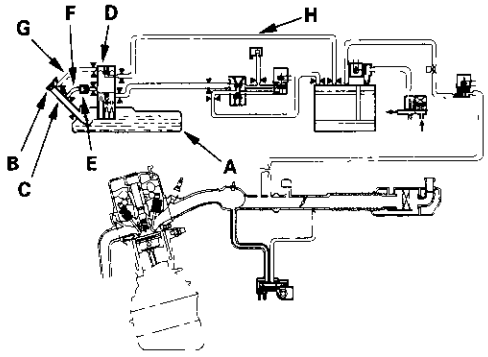


*Is the reading above 4 mmHg pressure or below – 4 mmHg vacuum?*

**YES** – Substitute a known-good ECM and retest. If the symptom/indication goes away, replace the original ECM. ■

**NO** – Check the following parts for leaks: ■

- Fuel tank (A)
- Fuel fill cap (B)
- Fuel fill pipe (C)
- Fuel tank vapor control valve (D)
- Fuel tank vapor recirculation valve (E)
- Fuel tank vapor recirculation tube (F)
- Fuel tank vapor signal tube (G)
- Fuel tank vapor control vent tube (H)

– Repair or replace parts as needed.

## DTC Troubleshooting (cont'd)

### DTC P1457: EVAP Control System Leakage (EVAP Canister System)

**NOTICE**

The fuel system is designed to allow specified maximum vacuum and pressure conditions. Do not deviate from the vacuum and pressure tests as indicated in these procedures. Excessive pressure/vacuum would damage the EVAP components or cause eventual fuel tank failure.

**Special Tools Required**

- Vacuum pump/gauge, 0—30 in.Hg A973X-041-XXXXX
- Vacuum/pressure gauge, 0—4 in.Hg 07JAZ-001000B

This is a two-trip code; once cleared, it cannot be reproduced in one trip. Also, certain specific driving and ambient conditions must occur before the ECM will complate the system checks. additional test drives may still not meet the specific conditions needed to reproduce the code. If necessary, use the test drive procedures for setting the readiness code (see page 11-38).

Follow these troubleshooting procedures carefully to ensure the integrity of the system and to confirm the cause of the problem or code.

NOTE: Fresh fuel has a higher volatility that will create greater pressure/vacuum. The optimum condition for testing is fresh fuel, at least half, but less than a full tank. If possible, to assist in leak detection, add 1 gallon of fresh fuel to the tank (as long as it will not fill the tank), just before starting these procedures.

**EVAP Canister Purge Valve Test**

1. Disconnect the vacuum hose from the EVAP purge joint (A), and connect a vacuum pump to the hose.

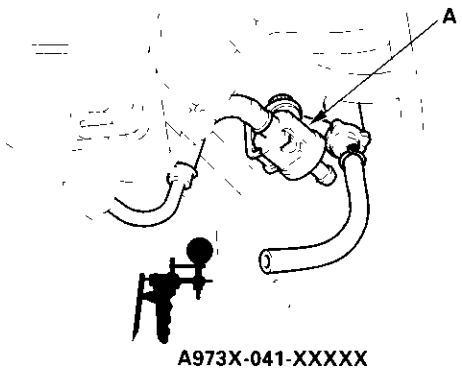


A973X-041-XXXXX

2. Connect ECM connector terminal A6 to body ground with a jumper wire.

ECM CONNECTOR A (32P)

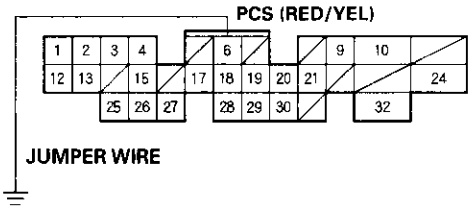


Wire side of female terminals

3. Turn the ignition switch ON (II).
4. Apply vacuum to the hose.

   *Does the valve hold vacuum?*

   **YES** Go to step 5.

   **NO**—The EVAP canister purge valve is OK. Go to step 10.

5. Turn the ignition switch OFF.
6. Disconnect the EVAP canister purge valve 2P connector.
7. Check for continuity between EVAP canister purge valve 2P connector terminal No. 2 and body ground.

EVAP CANISTER PURGE VALVE 2P CONNECTOR

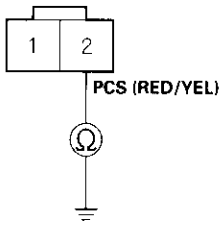


Wire side of female terminals

*Is there continuity?*

**YES**—Go to step 8.

**NO**—Repair open in the wire between the EVAP canister purge valve and the ECM (A6). ■

8. Turn the ignition switch ON (II).

9. Measure voltage between EVAP purge canister valve 2P connector terminal No. 1 and body ground.

**EVAP CANISTER PURGE VALVE 2P CONNECTOR**

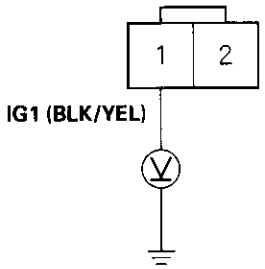


Wire side of female terminals

*Is there battery voltage?*

**YES** – Replace the EVAP canister purge valve. ■

**NO** – Repair open in the wire between the EVAP canister purge valve and the No. 6 ACG (15 A) fuse. ■

**EVAP Bypass Solenoid Valve Test**

10. Disconnect both vacuum hoses from the EVAP two way valve (A), and connect a vacuum pump to the canister port on the two way valve.

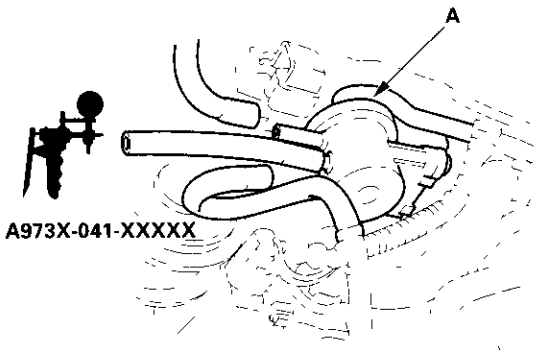


11. Turn the ignition switch ON (II).

12. Apply vacuum to the hose.

*Does the valve hold vacuum?*

**YES** – The EVAP bypass solenoid valve/EVAP two way valve is OK. Go to step 18.

**NO** – Go to step 13.

13. Turn the ignition switch OFF.

14. Disconnect the EVAP bypass solenoid valve 2P connector.

15. Check for continuity between EVAP bypass solenoid valve 2P connector terminal No. 2 and body ground.

**EVAP BYPASS SOLENOID VALVE 2P CONNECTOR**

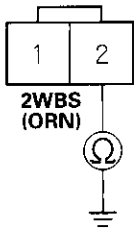


Wire side of female terminals

(cont'd)

## DTC Troubleshooting (cont'd)

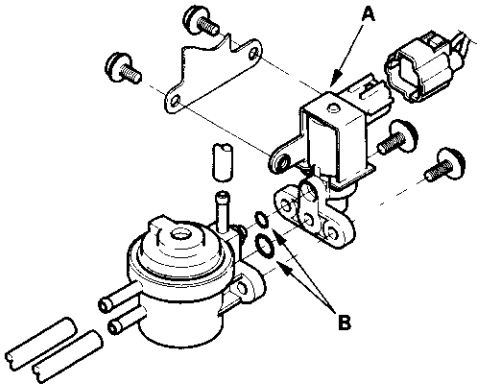


*Is there continuity?*

**YES** – Go to step 16.

**NO** – Replace the EVAP bypass solenoid valve (A) and o-rings (B). ■

16. Disconnect ECM connector A (32P).

17. Check for continuity between EVAP bypass solenoid valve 2P connector terminal No. 2 and body ground.

**EVAP BYPASS SOLENOID VALVE 2P CONNECTOR**

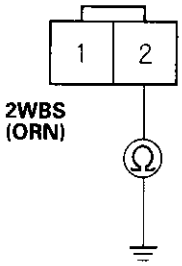


Wire side of female terminals

*Is there continuity?*

**YES** – Repair the short in the wire between the EVAP bypass solenoid valve and the ECM (A3). ■

**NO** – Substitute a known-good ECM and recheck (see page 11-5). If the symptom/indication goes away, replace the original ECM. ■

**EVAP Canister Vent Shut Valve Test**

18. Disconnect the vacuum hose from the EVAP canister vent filter, and connect a vacuum pump to the hose.

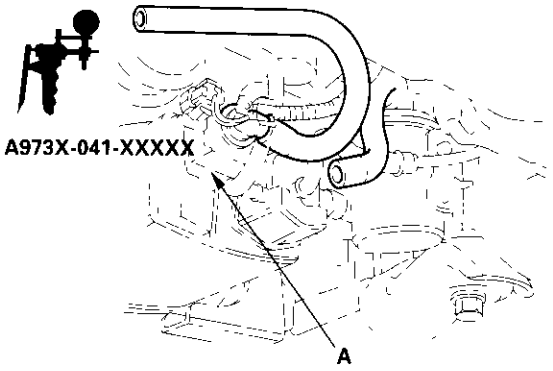


19. Connect ECM connector terminal A4 to body ground with a jumper wire.

**ECM CONNECTOR A (32P)**

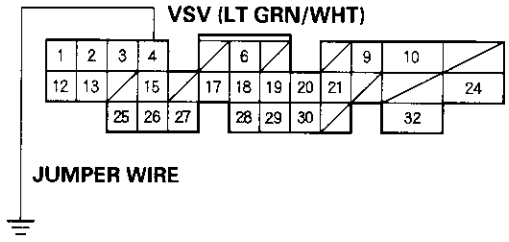


Wire side of female terminals

20. Turn the ignition switch ON (II)

21. Apply vacuum to the hose.

*Does the valve hold vacuum?*

**YES** – The EVAP canister vent shut valve is OK. Go to step 27.

**NO** – Go to step 22.

22. Turn the ignition switch OFF.

23. Disconnect the EVAP canister vent shut valve 2P connector.

24. Check for continuity between EVAP canister vent shut valve 2P connector terminal No. 2 and body ground.

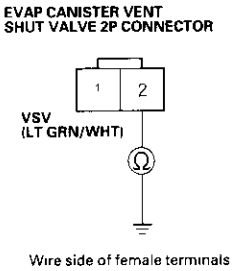


*Is there continuity?*

**YES** – Go to step 25.

**NO** – Repair open in the wire between the EVAP canister vent shut valve and the ECM (A4).■

25. Turn the ignition switch ON (II).

26. Measure voltage between EVAP canister vent shut valve 2P connector terminal No. 1 and body ground.

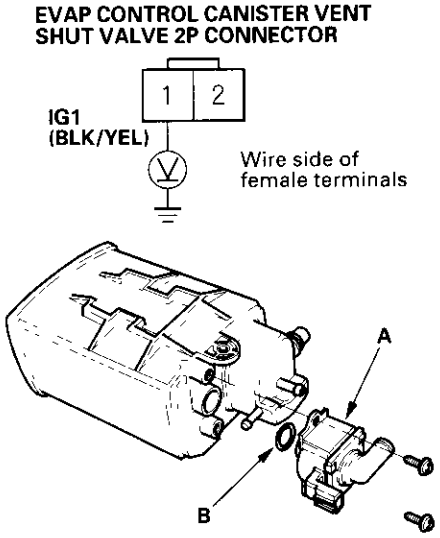


*Is there battery voltage?*

**YES** – Replace the EVAP canister vent shut valve (A) and the o-ring (B).■

**NO** – Repair open in the wire between the EVAP canister vent shut valve and the No. 6 ACG (15 A) fuse.■

**Canister System Leak Test**

27. Turn the ignition switch OFF.

28. Connect two three-way T-fittings (A) into the hose from the EVAP canister to the EVAP two way valve. Connect the FTP sensor to one of the tee T-fittings and the vacuum pump to the other.

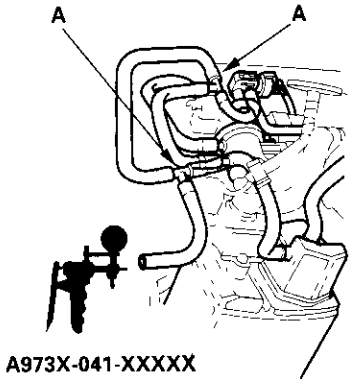


29. Remove the vent hose from the EVAP canister vent shut valve (A) and cap the port (B) to seal the fresh air vent for the EVAP canister.

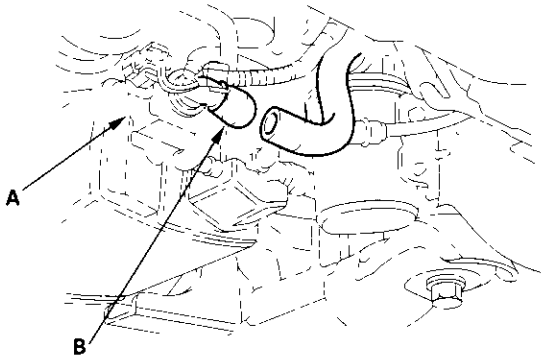


30. Turn the ignition switch ON (II).

31. While monitoring FTP sensor voltage with the Honda PGM Tester, or measuring voltage between ECM connector terminals A29 and C18, slowly pump the vacuum pump.

(cont'd)

## DTC Troubleshooting (cont'd)

32. Continue to pump vacuum until the voltage drops to about 1.5 V. Make sure that the engine coolant temperature is still above 95°F (35°C) and your vacuum pump has no leak.

33. Check the voltage for 20 seconds.

    *Does the voltage drop to 1.5 V and hold for at least 20 seconds?*

    **YES** – Inspect the EVAP canister vent shut valve line and connections. ■

    **NO** – Go to step 34.

34. Turn the ignition switch OFF.

35. Disconnect the quick-connect fitting (A) from the EVAP canister, and plug the canister port(B).

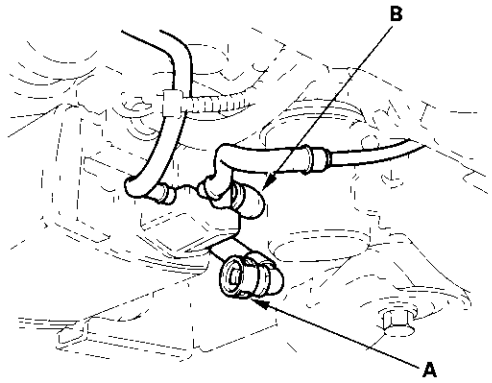


36. Turn the ignition switch ON (II).

37. While monitoring FTP sensor voltage with the Honda PGM Tester, or measuring voltage between ECM connector terminals A29 and C18, slowly pump the vacuum pump.

38. Continue to pump vacuum until the voltage drops to about 1.5 V. Make sure the engine coolant temperature is still above 95°F (35°C) and your vacuum pump has no leak.

39. Monitor the voltage continuously for 20 seconds.

    *Does the voltage drop to 1.5 V and hold for at least 20 seconds?*

    **YES** – Inspect the fuel tank vapor control line and connections. ■

    **NO** – Go to step 40.

40. Turn the ignition switch OFF.

41. Disconnect the purge line hose (A) from the canister at the metal line and plug the hose(B).

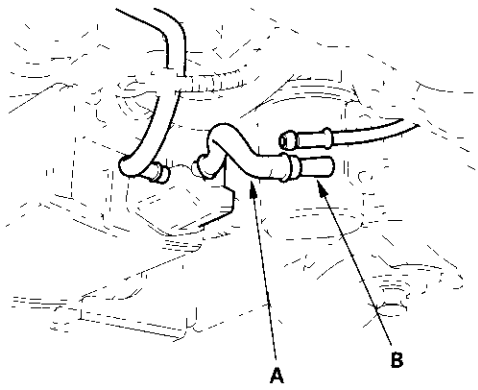


42. Turn the ignition switch ON (II).

43. While monitoring FTP sensor voltage with the Honda PGM Tester, or measuring voltage between ECM connector terminals A29 and C18, slowly pump the vacuum pump.

44. Continue to pump vacuum until the voltage drops to about 1.5 V. Make sure that the engine coolant temperature is still above 95°F (35°C) and your vacuum pump has no leak.

45. Check the voltage for 20 seconds.

    *Does the voltage drop to 1.5V and hold at least 20 seconds?*

    **YES** – Inspect the EVAP canister purge valve line and connections. If they are OK, test the EVAP two way valve, and fuel tank vapor control valve test (see page 11-145). ■

    **NO** – Replace the EVAP canister. ■

## EVAP Two Way Valve Test

1. Remove the fuel fill cap.

2. Disconnect the vapor line from the EVAP two way valve (A). Connect it to a T-fitting (B) from the vacuum gauge and the vacuum pump as shown.

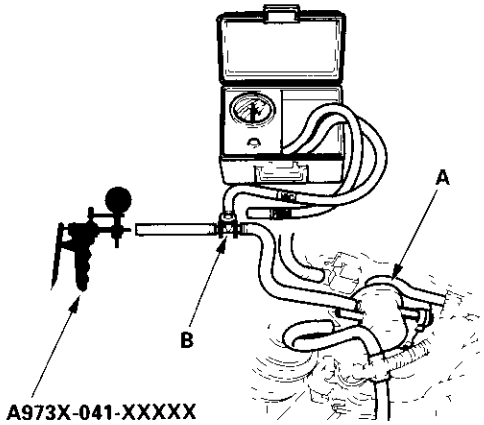


3. Apply vacuum slowly and continuously while watching the gauge.
   The vacuum should stabilize momentarily at 0.8 – 2.1 kPa (6 – 16 mmHg, 0.2 – 0.6 in.Hg).
   If the vacuum stabilizes (valve opens) below 0.8 kPa (6 mmHg, 0.2 in.Hg) or above 2.1 kPa (16 mmHg, 0.6 in.Hg), install a new valve and retest.

4. Move the vacuum pump hose from the vacuum fitting to the pressure fitting, and move the vacuum gauge hose from the vacuum side to the pressure side (A) as shown.

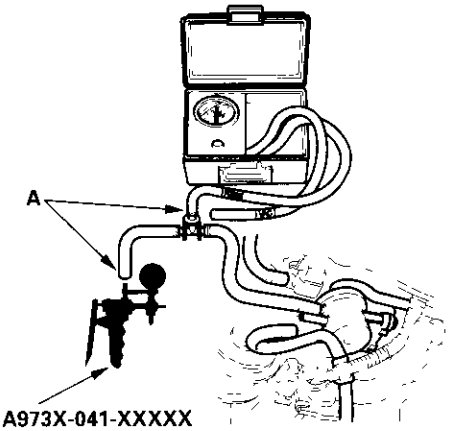


5. Slowly pressurize the vapor line while watching the gauge. The pressure should stabilize momentarily above 1.0 kPa (8 mmHg, 0.3 in.Hg).

   - If the pressure momentarily stabilizes (valve opens) above 1.0 kPa (8 mmHg, 0.3in.Hg), the valve is OK.
   - If the pressure stabilizes below 1.0 kPa (8 mmHg, 0.3 in.Hg), install a new valve and retest.

## Fuel Tank Vapor Control Valve Test

**Special Tools Required**
Vacuum pump/gauge, 0 30 in.Hg A973X-041-XXXXX

### Float Test

1. Make sure the fuel tank is less than half full.
2. Remove the fuel fill cap to relieve the fuel tank pressure, then reinstall the cap.
3. Remove the fuel pipe cover. Disconnect the fuel tank vapor recirculation tube (A), and connect a vacuum pump to the hose.

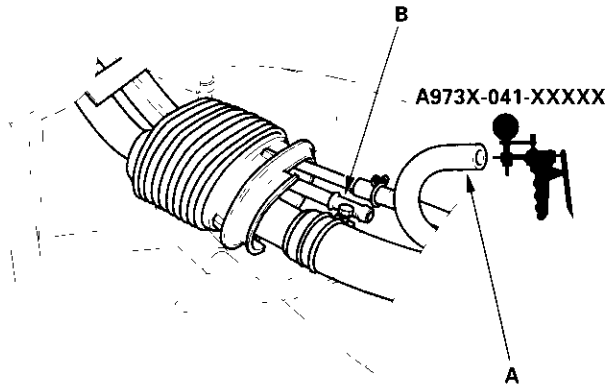


4. Plug the fuel tank vapor recirculation pipe (B).
5. Apply vacuum to the fuel tank vapor recirculation hose (A).
   - If the vacuum holds, replace the fuel tank vapor control valve (see page 11-147).
   - If the vacuum does not hold, the float is OK. Go to step 1 of the valve test.

### Valve Test

1. Make sure the fuel tank is less than half full.
2. Remove the fuel fill cap.
3. Remove the fuel pipe cover. Disconnect the fuel tank vapor signal hose (A).

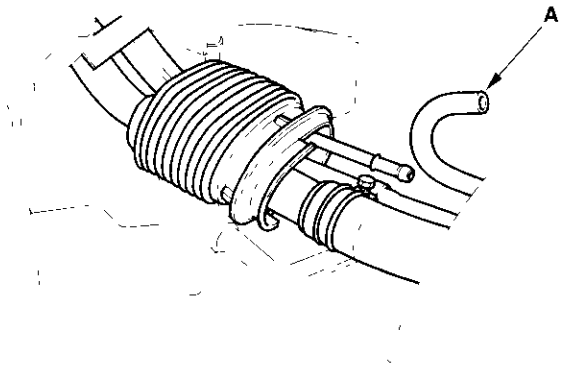


4. Disconnect the vacuum hoses (A) from the EVAP canister (B), and then plug the ports with plugs (C).

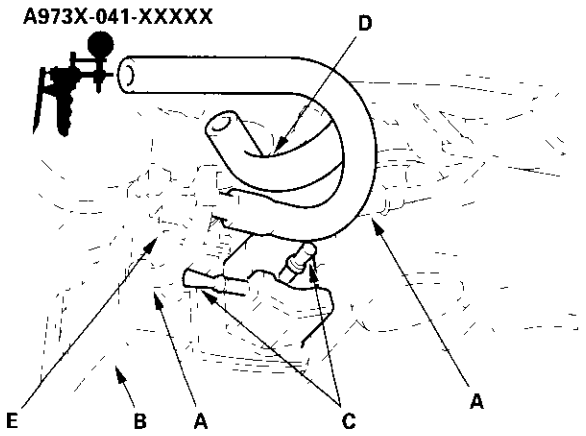


5. Disconnect the vacuum hose (D) from the EVAP canister vent shut valve (E), and connect a vacuum pump to the EVAP canister vent shut valve.
6. Pump the vacuum pump 80 times.
   - If the vacuum holds, go to step 7.
   - If the vacuum does not hold, go to step 9.

7. Connect a second vacuum pump to the fuel tank vapor signal hose (A).

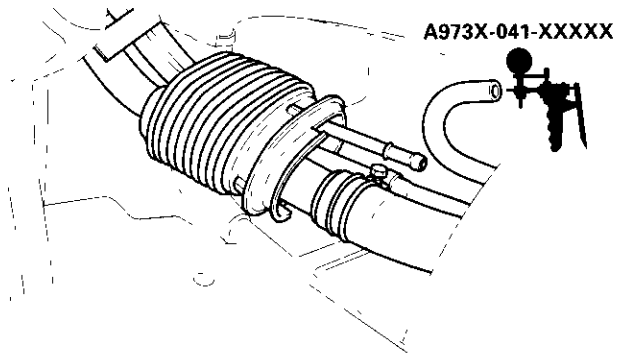


8. Apply vacuum (1 pump) to the fuel tank vapor signal tube (A), then check the vacuum on the pump in step 6.

   - If the vacuum holds, replace the fuel tank vapor control valve (see page 11-140).
   - If the vacuum is released, the fuel tank vapor control valve is OK.

9. Disconnect the fuel tank vapor quick disconnect from the EVAP canister, then plug the port on the canister. Reapply vacuum (80 pumps).

   - If the vacuum holds, replace the fuel tank vapor control valve (see page 11-140).
   - If the vacuum does not hold, inspect the EVAP canister vent sut valve o-ring. If the o-ring is OK, replace the EVAP canister and repeat step 4.

## Fuel Tank Vapor Control Valve Replacement

1. Remove the fuel tank (see page 11-115).

2. Remove the fuel tank vapor control valve (A) from the fuel tank (B).

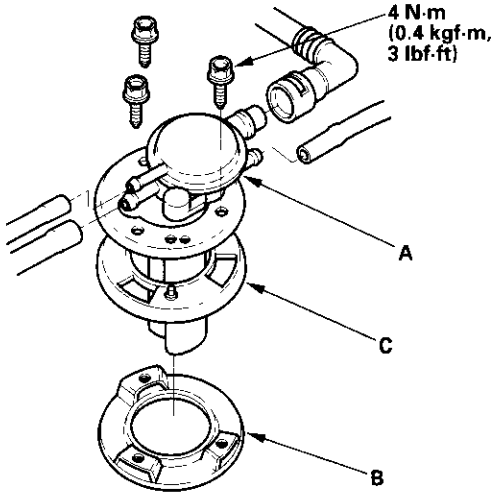


3. Replace the base gasket (C).

4. Install the fuel tank vapor control valve (A).

5. Install the fuel tank (see page 11-121).

## Component Location Index

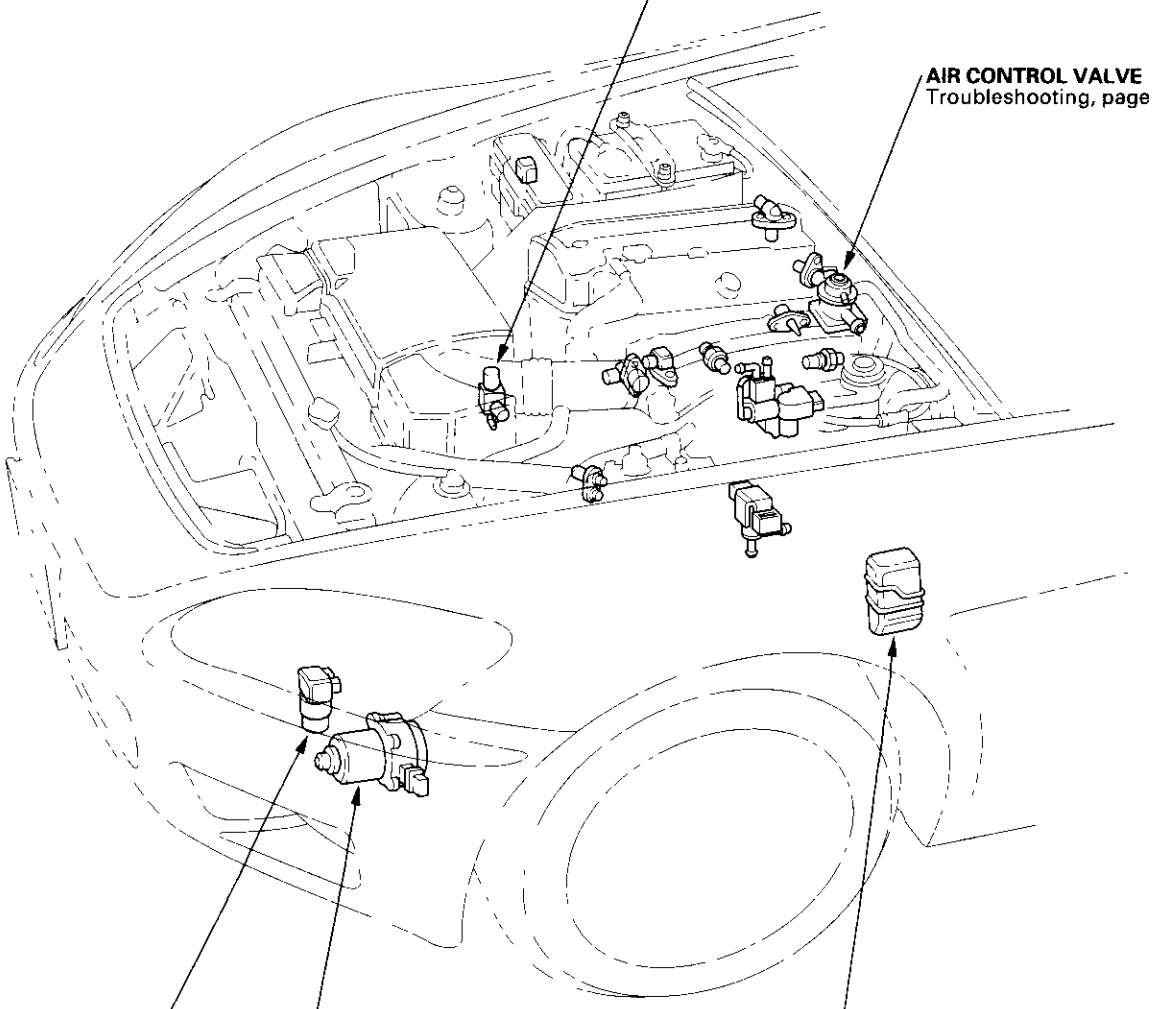

## DTC P0410: Air Pump Circuit Malfunction

1. Reset the ECM (see page 11-4).
2. Make sure the engine coolant temperature is over 32 °F (0 °C) and below 158 °F (60 °C) with the scan tool.
3. Start the engine. During air pump operation, hold the engine at idle speed with no load (in neutral) for at least 10 seconds.
4. Check for a Temporary DTC with the scan tool.

   *Is Temporary DTC P0410 indicated?*

   **YES** – Go to step 5.

   **NO** – Intermittent failure, system is OK at this time. Check for poor connections or loose terminals at the air control valve vacuum control solenoid valve and at the ECM. ■
5. Check the air pump.

   *Does the air pump operate?*

   **YES** – Go to step 36.

   **NO** – Go to step 6.
6. Turn the ignition switch OFF.
7. Check the AIR PUMP (60 A) fuse in the auxillary under-hood fuse box.

   *Is the fuse OK?*

   **YES** – Go to step 8.

   **NO** – Repair short in the wire between AIR PUMP (60 A) fuse and the air pump. Then replace the AIR PUMP (60 A) fuse. ■
8. Remove the left-front inner fender (see page 20-105).
9. Disconnect the air pump electrical current sensor 2P connector.
10. Turn the ignition switch ON (II).
11. At the left engine compartment wire harness side, measure voltage between air pump electrical current sensor 2P connector terminal No. 1 and body ground.

    **AIR PUMP ELECTRICAL CURRENT SENSOR 2P CONNECTOR**

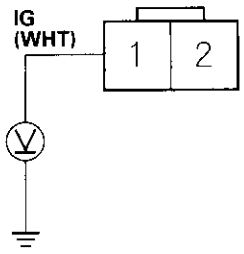


Wire side of female terminals

*Is there battery voltage?*

**YES** - Go to step 12.

**NO** – Repair open in the wire between the air pump electrical current sensor and the AIR PUMP (60 A) fuse in the auxillary under-hood fuse box. ■

12. Turn the ignition switch OFF.
13. At the air pump electrical current sensor side, check for continuity between air pump electrical current sensor 2P connector terminals No. 1 and No. 2.

    **AIR PUMP ELECTRICAL CURRENT SENSOR 2P CONNECTOR**

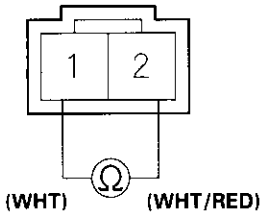


Terminal side of male terminals

*Is there continuity?*

**YES** – Go to step 14.

**NO** – Replace the air pump electrical current sensor. ■

(cont'd)

## DTC Troubleshooting (cont'd)

14. Reconnect the air pump electrical current sensor.
15. Disconnect the large air pump relay 2P connector.
16. Turn the ignition switch ON (II).
17. Measure voltage between large air pump relay 2P connector terminal No. 1 and body ground.

**LARGE AIR PUMP RELAY 2P CONNECTOR**

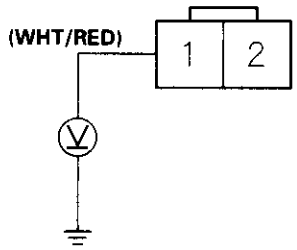


Wire side of female terminals

*Is there battery voltage?*

**YES** – Go to step 18.

**NO** – Repair open in the wire between the air pump electrical current sensor and the air pump relay. ■

18. Turn the ignition switch OFF.
19. Do the air pump relay test (see page 11-160).

*Is the air pump relay OK?*

**YES** – Go to step 20.

**NO** – Replace the air pump relay. ■

20. Turn the ignition switch ON (II).
21. Connect large air pump relay 2P connector terminals No. 1 and No. 2 with a jumper wire.

**LARGE AIR PUMP RELAY 2P CONNECTOR**

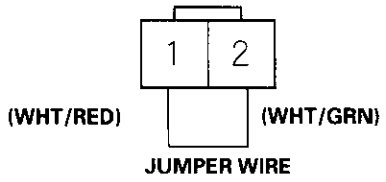


Wire side of female terminals

*Does the air pump operate when the jumper wire is connected?*

**YES** – Go to step 22.

**NO** – Go to step 31.

22. Turn the ignition switch OFF.
23. Disconnect the jumper wire from the large air pump relay 2P connector.
24. Disconnect the small air pump relay 2P connector.
25. Check for continuity between small air pump relay 2P connector terminal No. 2 and body ground.

**SMALL AIR PUMP RELAY 2P CONNECTOR**

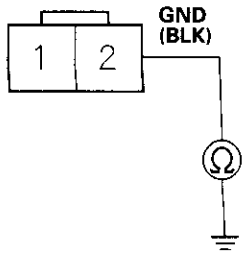


Wire side of female terminals

*Is there continuity?*

**YES** – Go to step 26.

**NO** – Repair open in the wire between the air pump relay and body ground. ■

26. Disconnect ECM connector A (32P).

27. Check for the continuity between ECM connector terminal A28 and body ground.

**ECM CONNECTOR A (32P)**

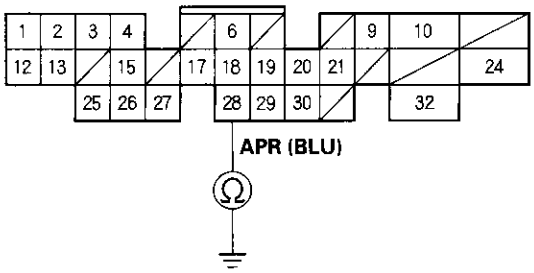


Wire side of female terminals

*Is there continuity?*

**YES** – Repair short in the wire between the air pump relay and the ECM (A28). ■

**NO** – Go to step 28.

28. Connect small air pump relay 2P connector terminal No. 1 to body ground with a jumper wire.

**SMALL AIR PUMP RELAY 2P CONNECTOR**

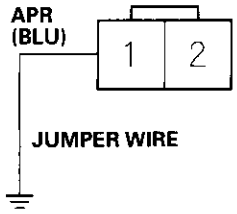


Wire side of female terminals

29. Check for continuity between ECM connector terminal A28 and body ground.

**ECM CONNECTOR A (32P)**

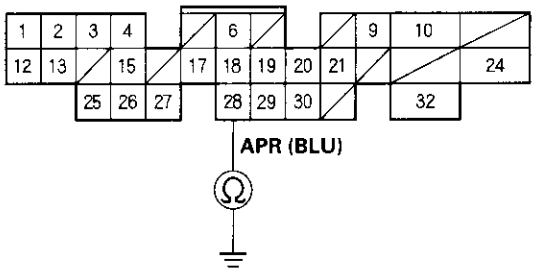


Wire side of female terminals

*Is there continuity?*

**YES** – Substitute a known-good ECM and recheck (see page 11-5). If the symptom/indication goes away, replace the original ECM. ■

**NO** – Repair open in the wire between the air pump relay and the ECM (A28). ■

30. Turn the ignition switch OFF.

31. Disconnect the jumper wire from the large air pump relay 2P connector.

32. Disconnect the air pump 2P connector.

(cont'd)

## DTC Troubleshooting (cont'd)

33. Check for continuity between large air pump relay 2 P connector terminal No. 2 and air pump 2P connector terminal No. 1.

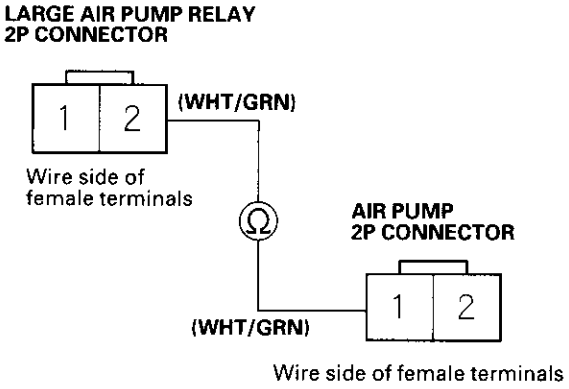


*Is there continuity?*

**YES** – Go to step 35.

**NO** – Repair open in the wire between the pump relay and the air pump. ■

34. Check for continuity between the air pump 2P connector terminal No. 2 and body ground.

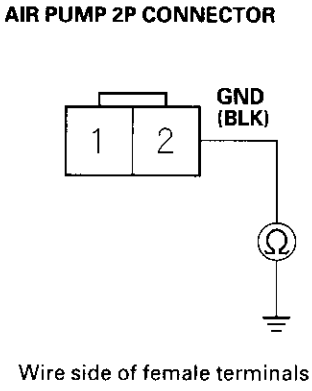


*Is there continuity?*

**YES** – Replace the air pump. ■

**NO** – Repair open in the wire between the air pump and body ground. ■

35. Turn the ignition switch OFF.

36. Do the air pump relay test (see page 11-160).

*Is the air pump relay OK?*

**YES** – Go to step 37.

**NO** – Replace the air pump relay. ■

37. Disconnect ECM connector A (32P).

38. Reconnect the negative cable to the battery.

39. Turn the ignition switch ON (II).

40. Measure voltage between ECM connector terminal A28 and body ground.

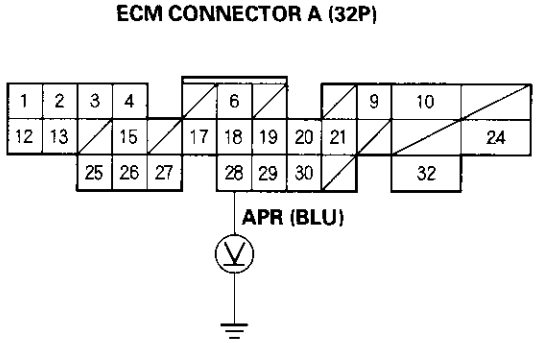


*Is there voltage?*

**YES** – Repair short to power in the wire between the air pump relay and the ECM (A28). ■

**NO** – Substitute a known-good ECM and recheck (see page 11-5). If the symptom/indication goes away, replace the original ECM. ■

## **DTC P0411:** Secondary Air Injection System Incorrect Flow

1. Reset the ECM (see page 11-4).
2. Make sure the engine coolant temperature is over 32 °F (0 °C) and below 158 °F (60 °C) with the scan tool.
3. Start the engine. While the air pump operates, let the engine idle with no load (in neutral) for at least 10 seconds.
4. Check for a Temporary DTC with the scan tool.

   *Is Temporary DTC P0411 indicated?*

   **YES** – Go to step 5.

   **NO** – Intermittent failure, system is OK at this time. Check for poor connections or loose terminals at the air control valve vacuum control solenoid valve and at the ECM. ■
5. Turn the ignition switch OFF.
6. Check the vacuum lines of the air pump system for misrouting, leakage, breakage, and clogging.

   *Are the vacuum lines OK?*

   **YES** – Go to step 7.

   **NO** – Repair or replace vacuum lines as necessary. ■
7. Reset the ECM (see page 11-4).
8. Make sure the engine coolant temperature is over 32 °F (0 °C) and below 158 °F (60 °C) with the scan tool.
9. Disconnect the vacuum hose from the air control valve (A), and connect a vacuum gauge to the hose.

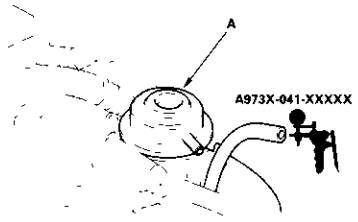


10. Start the engine. While the air pump operates, let the engine idle with no load (in neutral).

    *Is there vacuum while the air pump operates?*

    **YES** – Go to step 11.

    **NO** – Go to step 17.
11. Turn the ignition switch OFF.
12. Disconnect the air control valve vacuum control solenoid valve 2P connector.
13. Check for the continuity between the air control valve vacuum control solenoid valve 2P connector terminal No. 2 and body ground.

**AIR CONTROL VALVE VACUUM CONTROL SOLENOID VALVE 2P CONNECTOR**

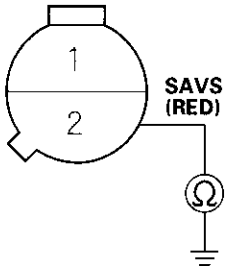


Wire side of female terminals

*Is there continuity?*

**YES** – Go to step 14.

**NO** – Replace the air control valve vacuum control solenoid valve. ■

(cont'd)

## DTC Troubleshooting (cont'd)

14. Disconnect ECM connector A (32P).

15. Check for continuity between air control valve vacuum control solenoid valve 2P connector terminal No. 2 and body ground.

**AIR CONTROL VALVE VACUUM CONTROL SOLENOID VALVE 2P CONNECTOR**

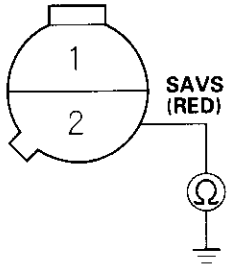


Wire side of female terminals

*Is there continuity?*

**YES**—Repair short in the wire between the air control valve vacuum control solenoid valve and the ECM (A2).■

**NO**—Substitute a known-good ECM and recheck (see page 11-5). If the symptom/indication goes away, replace the original ECM.■

16. Turn the ignition switch OFF.

17. Check the No. 6 ACG (15 A) fuse in the under-dash fuse/relay box.

*Is the fuse OK?*

**YES**—Go to step 18.

**NO**—Repair short in the wire between No. 6 ACG (15 A) fuse and the gauge assembly. Then replace the No. 6 ACG (15 A) fuse.■

18. Disconnect the air control valve vacuum control solenoid valve 2P connector.

19. Turn the ignition switch ON (II).

20. Measure voltage between air control valve vacuum control solenoid valve 2P connector terminal No. 1 and body ground.

**AIR CONTROL VALVE VACUUM CONTROL SOLENOID VALVE 2P CONNECTOR**

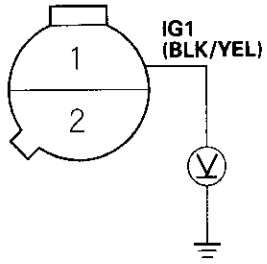


Wire side of female terminals

*Is there battery voltage?*

**YES**—Go to step 21.

**NO**—Repair open in the wire between the No. 6 ACG (15 A) fuse in the under-dash fuse/relay box and air control solenoid valve.■

21. Turn the ignition switch OFF.

22. Reconnect the air control valve vacuum control solenoid valve 2P connector.

23. Disconnect ECM connector A (32P).

24. Turn the ignition switch ON (II), and measure voltage between ECM connector terminal A2 and body ground.

*Is there less than 1.0 V?*

**YES**—Repair open in the wire between the air control valve vacuum control solenoid valve and the ECM (A2). If the wire is OK, replace the air control valve vacuum control solenoid valve.■

**NO**—Substitute a known-good ECM and recheck (see page 11-5). If the symptom/indication goes away, replace the original ECM.■

## **DTC P1410:** Air Pump Malfunction

1. Reset the ECM (see page 11-4).
2. Make sure the engine coolant temperature is over 32 °F (0°C) and below 158 °F (60°C) with the scan tool.
3. Start the engine. While the air pump operates, let the engine idle with no load (in neutral) for at least 10 seconds.
4. Check for a Temporary DTC with the scan tool.

   *Is Temporary DTC P1410 indicated?*

   **YES**—Replace the air pump.■

   **NO**—Intermittent failure, system is OK at this time. Check for poor connections or loose terminals at the air pump and the air pump relay.■

## DTC Troubleshooting (cont'd)

### DTC P1415: Air Pump Electrical Current Sensor Circuit Low Voltage

1. Reset the ECM (see page 11-4).
2. Turn the ignition switch ON (II).
3. Check for a DTC with the scan tool.

   *Is DTC P1415 indicated?*

   **YES** – Go to step 4.

   **NO** – Intermittent failure, system is OK at this time. Check for poor connections or loose terminals at the air pump electrical current sensor and the ECM. ■

4. Turn the ignition switch OFF.
5. Disconnect the air pump electrical current sensor 3P connector.
6. Turn the ignition switch ON (II).
7. Measure voltage between air pump electrical current sensor 3P connector terminals No. 1 and No. 2.

   **AIR PUMP ELECTRICAL CURRENT SENSOR 3P CONNECTOR**

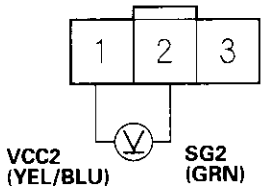


Wire side of female terminals

   *Is there about 5 V?*

   **YES** Go to step 8.

   **NO** – Go to step 17.

8. Turn the ignition switch OFF.
9. Disconnect the ECM connector C (31P).
10. Check for continuity between air pump electrical current sensor 3P connector terminal No. 3 and body ground.

    **AIR PUMP ELECTRICAL CURRENT SENSOR 3P CONNECTOR**

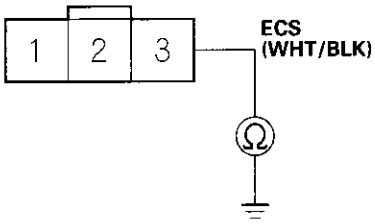


Wire side of female terminals

    *Is there continuity?*

    **YES** – Repair short in the wire between the air pump electrical current sensor and the ECM (C24). ■

    **NO** – Go to step 11.

11. Connect air pump electrical current sensor 3P connector terminals No. 2 and No. 3 with a jumper wire.

    **AIR PUMP ELECTRICAL CURRENT SENSOR 3P CONNECTOR**

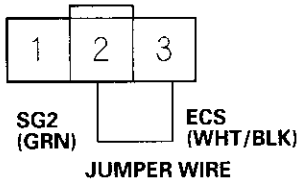


Wire side of female terminals

12. Check for continuity between ECM connector terminals C24 and C18.

**ECM CONNECTOR C (31P)**

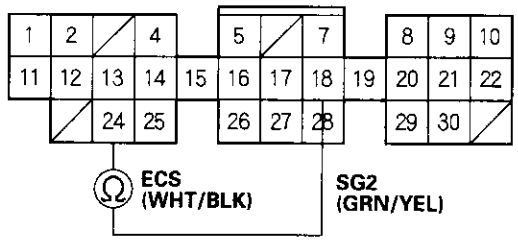


Wire side of female terminals

*Is there continuity?*

**YES** – Go to step 14.

**NO** – Repair open in the wire between the ECM (C24) and the air pump electrical current sensor. ■

13. Disconnect the jumper wire from the air pump electrical current sensor 3P connector.

14. Reconnect ECM connector C (31P) and the air pump electrical current sensor 3P connector.

15. Turn the ignition switch ON (II).

16. Measure voltage between body ground and ECM connector terminal C24.

**ECM CONNECTOR C (31P)**

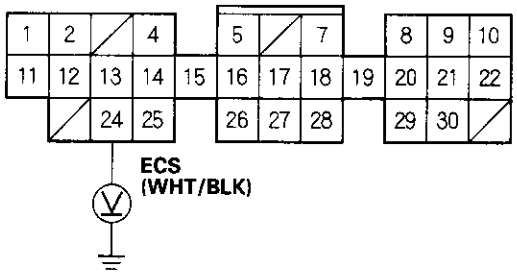


Wire side of female terminals

*Is there about 0.5 V?*

**YES** – Substitute a known-good ECM and recheck (see page 11-5). If the symptom/indication goes away, replace the original ECM. ■

**NO** – Replace the air pump electrical current sensor. ■

17. Measure voltage between ECM connector terminals C18 and C28.

**ECM CONNECTOR C (31P)**

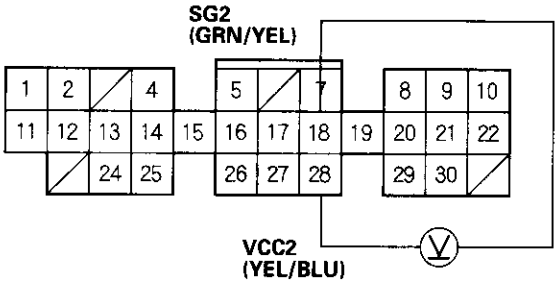


Wire side of female terminals

*Is there about 5 V?*

**YES** – Repair open in the wire between the ECM (C28) and the air pump electrical current sensor. ■

**NO** - Substitute a known-good ECM and recheck (see page 11-5). If voltage is normal, replace the original ECM. ■

## DTC Troubleshooting (cont'd)

### DTC P1416: Air Pump Electric Current Sensor Circuit High Voltage

1. Reset the ECM (see page 11-4).
2. Turn the ignition switch ON (II).
3. Check for a DTC with the scan tool.

   *Is DTC P1416 indicated?*

   **YES** – Go to step 4.

   **NO** – Intermittent failure, system is OK at this time. Check for poor connections or loose terminals at the air pump electrical current sensor and at the ECM.■

4. Turn the ignition switch OFF.
5. Disconnect the air pump electrical current sensor 3P connector.
6. Turn the ignition switch ON (II).
7. Measure voltage between air pump electrical current sensor 3P connector terminals No. 1 and No. 2.

   **AIR PUMP ELECTRICAL CURRENT SENSOR 3P CONNECTOR**

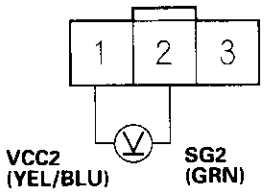


Wire side of female terminals

   *Is there about 5 V?*

   **YES** – Replace the air pump electrical current sensor.■

   **NO** – Go to step 8.

8. Measure voltage between ECM connector terminals C18 and C28.

   **ECM CONNECTOR C (31P)**

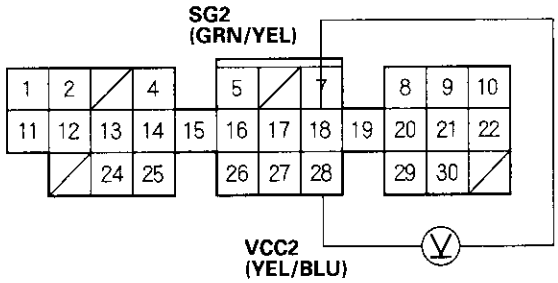


Wire side of female terminals

   *Is there about 5 V?*

   **YES** – Repair open in the wire between the ECM (C18) and the air pump electrical current sensor.■

   **NO** – Substitute a known-good ECM and recheck (see page 11-5). If voltage is normal, replace the original ECM.■

## Air Pump/Air Pump Relay Removal/Installation

1. Remove the front bumper (see page 20-92).
2. Remove the air pump (A), and the air pump relay (B).

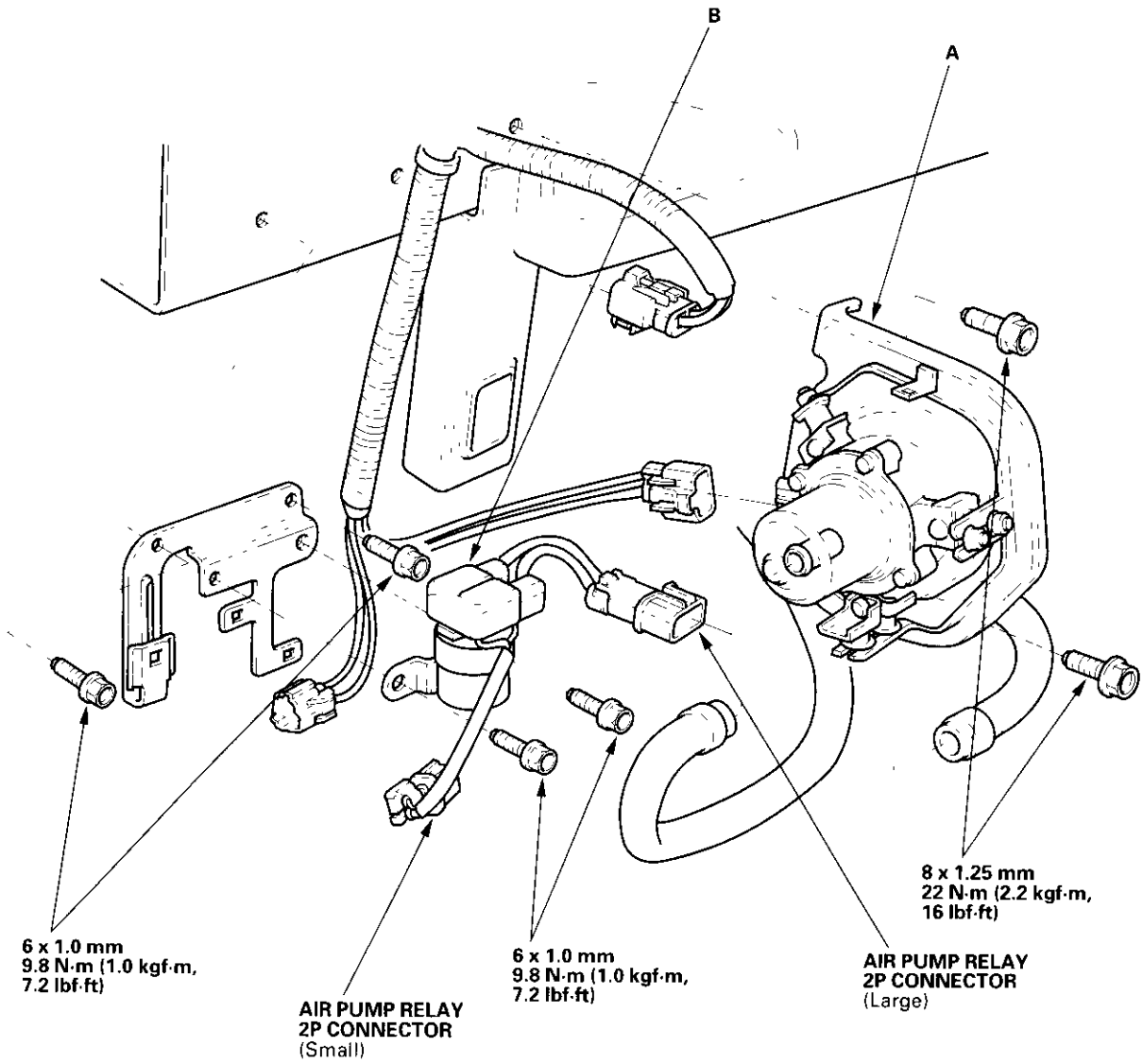


3. Install in the reverse order of removal.

## Air Pump Relay Test

Check for continuity between the terminals according to the table.

- There should be continuity between the A1 and A2 terminals of the air pump relay 2P large connector when power and ground are connected to the B1 terminal of the air pump relay 2P small connector.
- There should be no continuity between the A1 and A2 terminals when power is disconnect from the air pump 2P small connector.

| Terminal / Power (B1) | A1 | A2 |
|---|---|---|
| Connected | ○ | ○ |
| Disconnected | | |

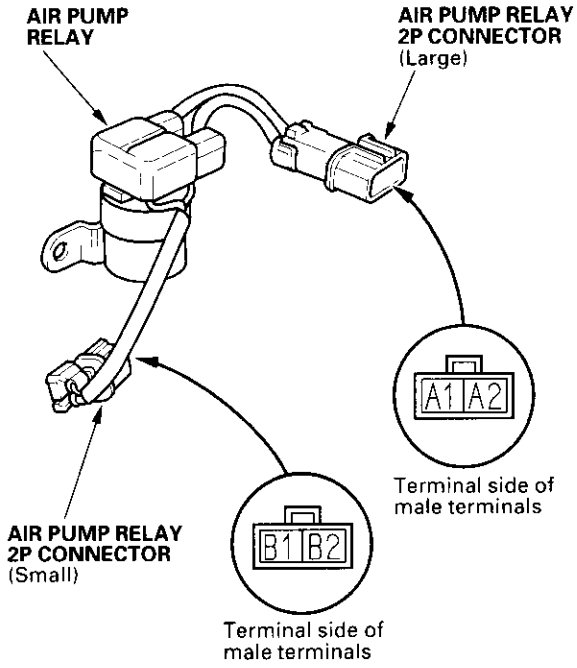


## Air Pump Electrical Current Sensor Removal/Installation

1. Pull away the left inner fender as necessary (see page 20-105).
2. Disconnect the air pump electrical current sensor 2P connector (A), and remove the lower cover (B), then disconnect the air pump electrical current sensor 3P connector (C).

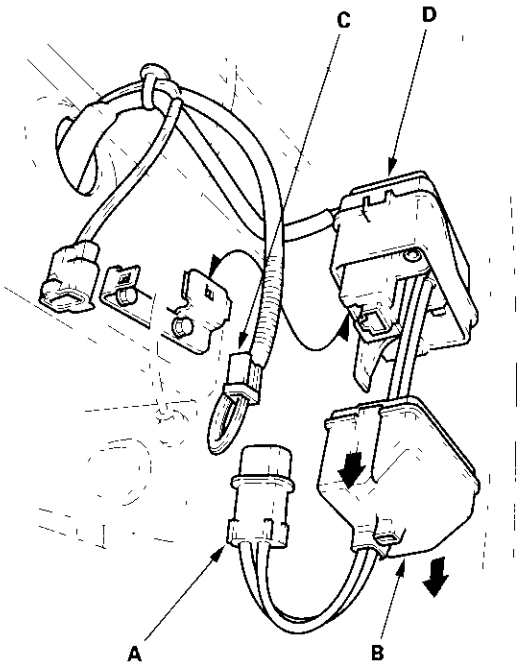


3. Remove the air pump electrical current sensor (D).
4. Install in the reverse order of removal.

# Transaxle


Clutch ..... 12-1

Manual Transmission ..... 13-1

Rear Differential ..... 15-1

Driveline/Axle ..... 16-1




# Transaxle

## Clutch


Special Tools ..... 12-2
Component Location Index ..... 12-3
Clutch Pedal, Clutch Pedal Position Switch, and Clutch Interlock Switch Adjustment ..... 12-4
Clutch Master Cylinder Replacement ..... 12-5
Slave Cylinder Replacement ..... 12-6
Clutch Replacement ..... 12-7




## Special Tools

| Ref. No. | Tool Number | Description | Qty |
|---|---|---|---|
| ① | 07LAB-PV00100 or 07924-PD20003 | Ring Gear Holder | 1 |
| ② | 07LAF-PT00110 | Clutch Alignment Shaft | 1 |
| ③ | 07746-0010200 | Attachment, 32 x 37 mm | 1 |
| ④ | 07749-0010000 | Driver | 1 |
| ⑤ | 07936-3710100 | Remover Handle | 1 |

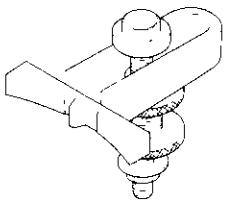

①



②

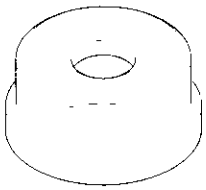

③

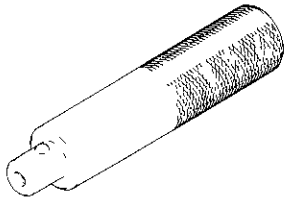

④

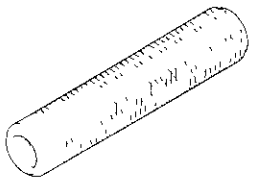

⑤

## Component Location Index

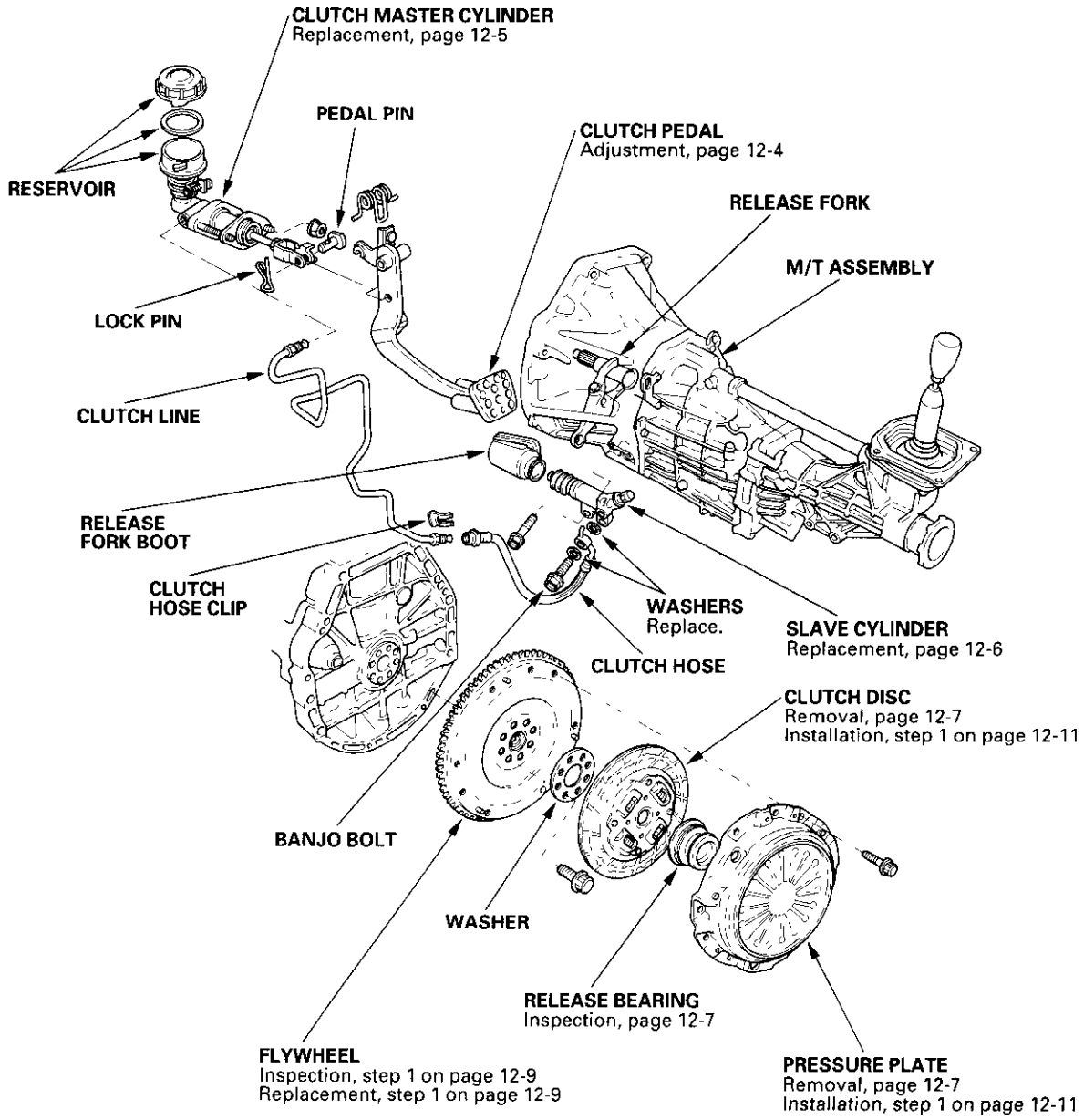

## Clutch Pedal, Clutch Pedal Position Switch, and Clutch Interlock Switch Adjustment

NOTE:
- To check the clutch pedal position switch (see page 4-47).
- To check the clutch interlock switch (see page 4-6).
- The clutch is self-adjusting to compensate for wear.
- If there is no clearance between the master cylinder piston and push rod, the release bearing is held against the diaphragm spring, which can result in clutch slippage or other clutch problems.

1. Loosen locknut (A), and back off the clutch switch (B) until it no longer touches the clutch pedal (C).

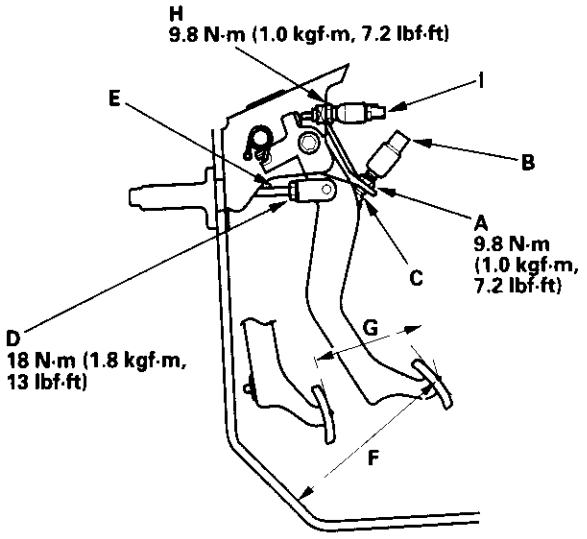


2. Loosen locknut (D), and turn the push rod (E) in or out to get the specified height (F) and stroke (G) at the clutch pedal.

   **Clutch Pedal Stroke: 115 – 125 mm (4.53 – 4.92 in.)**
   **Clutch Pedal Height: 189 mm (7.44 in.)**

3. Tighten locknut (D).

4. With the clutch pedal released, turn the clutch pedal position switch (B) in until it contacts the clutch pedal (C).

5. Turn the clutch pedal position switch (B) in an additional 3/4 to 1 turn.

6. Tighten locknut (A).

7. Loosen locknut (H) and the clutch interlock switch (I).

8. Press the clutch pedal to the floor.

9. Release the clutch pedal 15 – 20 mm (0.59 – 0.79 in.) from the fully depressed position, and hold it there. Adjust the position of the clutch interlock switch (I) so that the engine will start with the clutch pedal in this position.

10. Tighten locknut (H).

## Clutch Master Cylinder Replacement

NOTE: Do not spill brake fluid on the vehicle; it may damage the paint; if brake fluid does contact the paint, wash it off immediately with water.

1. The brake fluid may be sucked out through the top of the master cylinder reservoir (A) with a syringe.

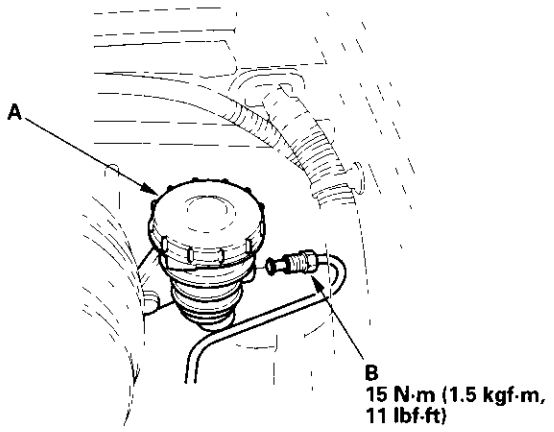


2. Disconnect the clutch line (B) from the clutch master cylinder. Plug the end of the clutch line and reservoir hose with a shop towel to prevent brake fluid from coming out.

3. Pry out the lock pin (A), and pull the pedal pin (B) out of the yoke. Remove the nuts (C).

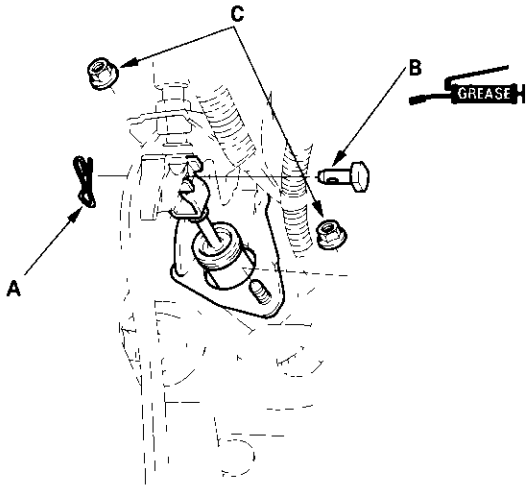


4. Remove the clutch master cylinder (A).

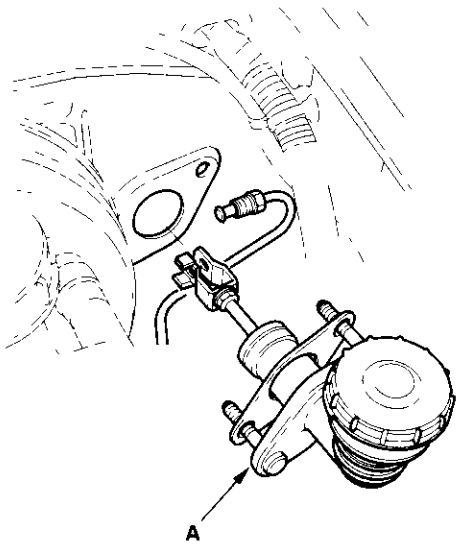


5. Install the clutch master cylinder in the reverse order of removal. Tighten the master cylinder mounting nuts to 13 N·m (1.3 kgf·m, 9.4 lbf·ft).

6. Bleed the clutch hydraulic system (see step 6 on page 12-6).

## Slave Cylinder Replacement

NOTE: Do not spill brake fluid on the vehicle; it may damage the paint; if brake fluid does contact the paint, wash it off immediately with water.

1. Remove the banjo bolt (A) and washers (B), then disconnect the clutch hose (C) from the slave cylinder (D). Plug the end of the clutch hose with a shop towel to prevent brake fluid from coming out.

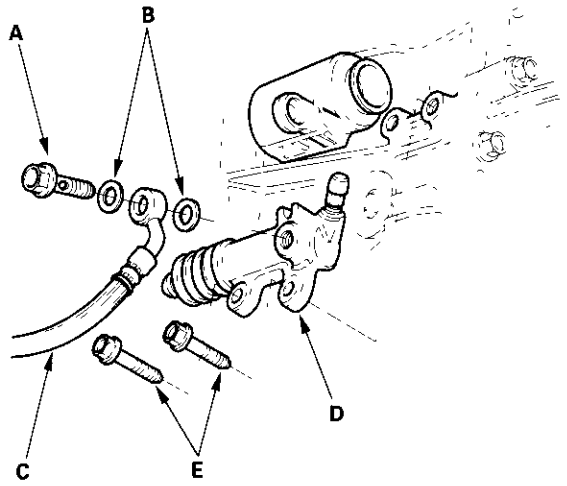


2. Remove the two bolts (E) and slave cylinder.

3. Pull the boot (A) back and apply brake assembly lube or equivalent rubber grease to the boot and slave cylinder rod (B). Reinstall the boot.

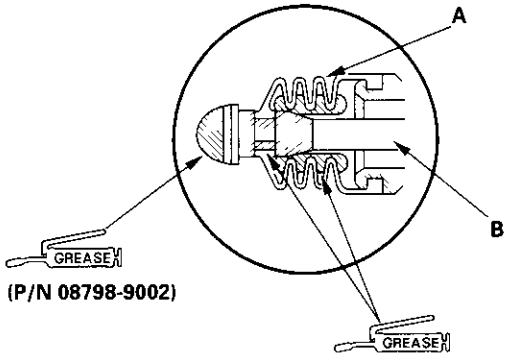


(P/N 08798-9002)

(Brake Assembly Lube)

4. Apply super high temp urea grease to the tip of the slave cylinder rod.

5. Install the slave cylinder in the reverse order of removal. Use new banjo bolt washers.

   NOTE: Make sure the boot is installed on the slave cylinder.

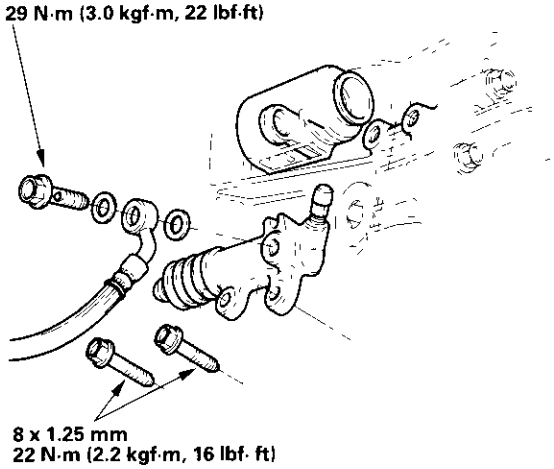


6. Bleed the clutch hydraulic system. Tighten the bleeder screw to 9.8 N·m (1.0 kgf·m, 7.2 lbf·ft).

   NOTE: Be careful not to damage the slave cylinder by overtightening the bleeder screw.

   - Attach a hose to the bleeder screw (A), and suspend the hose in a container of brake fluid.
   - Make sure there is an adequate supply of fluid at the clutch master cylinder, then slowly pump the clutch pedal until no more bubbles appear at the bleeder hose.
   - Refill the clutch master cylinder with fluid when done.
   - Always use only Honda DOT 3 brake fluid.
   - Confirm clutch operation, and check for leaking fluid.

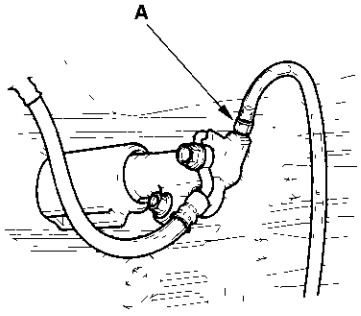

## Clutch Replacement

**Special Tools Required**
- Clutch alignment shaft 07LAF-PT00110
- Remover handle 07936-3710100
- Ring gear holder 07LAB-PV00100 or 07924-PD20003
- Driver 07749-0010000
- Attachment, 32 x 37 mm 07746-0010200

### Pressure Plate and Clutch Disc Removal

1. Check the diaphragm spring fingers height-variation using the dial indicator (A). If the variation is more than the service limit, replace the pressure plate.

   **Standard (New): 0.4 mm (0.016 in.) max.**
   **Service Limit: 0.6 mm (0.024 in.)**

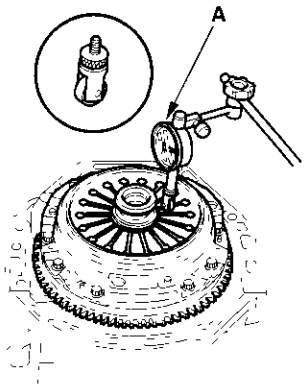


2. Install the special tools.

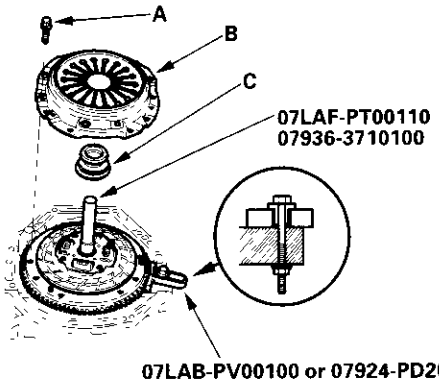


3. To prevent warping, unscrew the pressure plate mounting bolts (A) in a crisscross pattern in several steps, then remove the pressure plate (B).

4. Remove the release bearing (C) from the pressure plate.

5. Inspect the fingers of the diaphragm spring (A) for wear at the release bearing contact area.

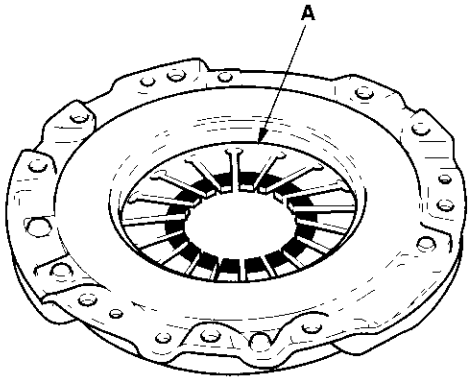


6. Inspect the pressure plate surface for wear, cracks, and burning.

7. Inspect for warpage using a straight edge (A) and feeler gauge (B). Measure across the pressure plate (C). If the warpage is more than the service limit, replace the pressure plate.

   **Standard (New): 0.03 mm (0.001 in.) max.**
   **Service Limit: 0.15 mm (0.006 in.)**

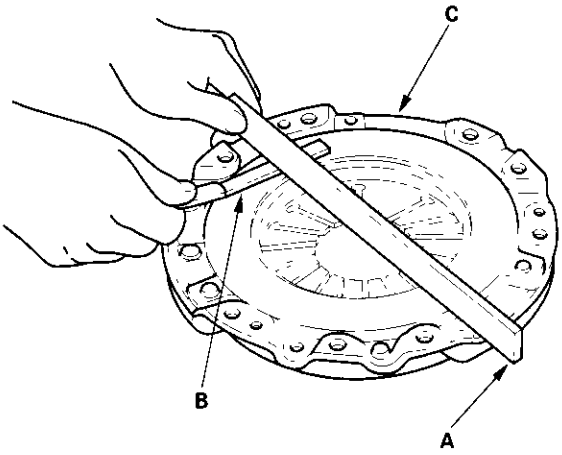


(cont'd)

## Clutch Replacement (cont'd)

8. Remove the clutch disc and special tools.

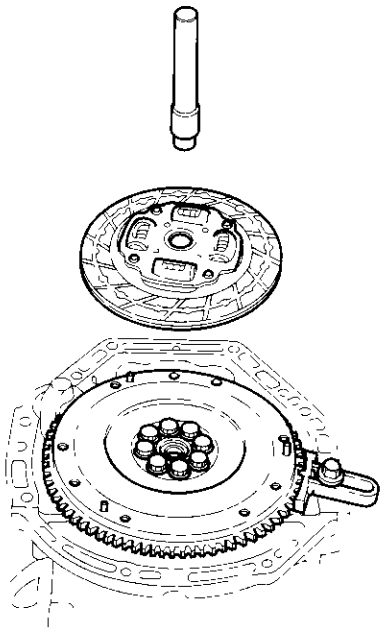

9. Inspect the lining of the clutch disc for signs of slipping or oil. If the clutch disc is burned black or oil soaked, replace it.

10. Measure the clutch disc thickness. If the thickness is less than the service limit, replace the clutch disc.

**Standard (New):** **8.2–8.9 mm (0.32–0.35 in.)**
**Service Limit:** **6.0 mm (0.24 in.)**

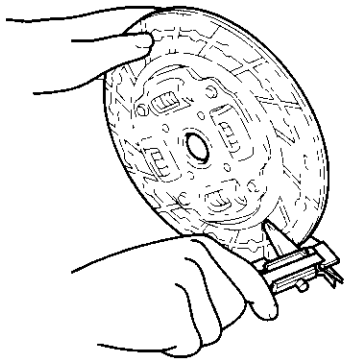

11. Measure the rivet depth from the lining surface (A) to rivets (B), on both sides. If the rivet depth is less than the service limit, replace the clutch disc.

**Standard (New):** **1.2–1.7 mm (0.047–0.067 in.)**
**Service Limit:** **0.2 mm (0.008 in.)**



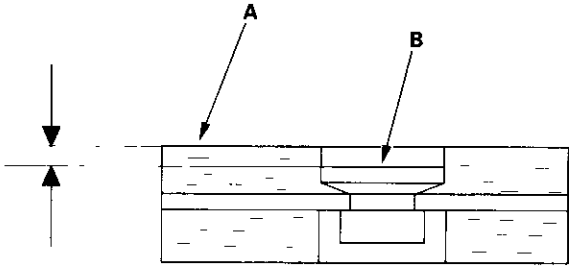

## Flywheel Inspection

1. Inspect the ring gear teeth for wear and damage.
2. Inspect the clutch disc mating surface on the flywheel for wear, cracks, and burning.
3. Measure the flywheel (A) runout using a dial indicator (B) through at least two full turns. Push against the flywheel each time you turn it to take up the crankshaft thrust washer clearance. If the runout is more than the service limit, replace the flywheel and recheck the runout. Resurfacing the flywheel is not recommended.

**Standard (New):** **0.05 mm (0.002 in.) max.**
**Service Limit:** **0.15 mm (0.24 in.)**

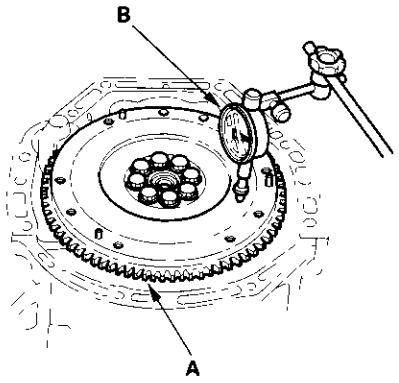


4. Turn the inner race of the ball bearing (A) with your finger. The ball bearing should turn smoothly and quietly. Check that the ball bearing outer race fits tightly in the flywheel. If the race does not turn smoothly, quietly, or fit tight in the flywheel, replace the ball bearing.

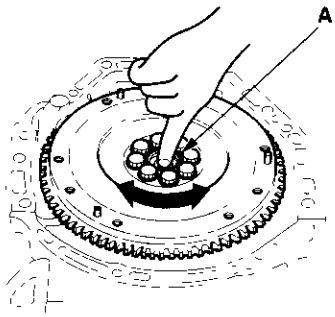


## Flywheel Replacement

1. Install the special tool.

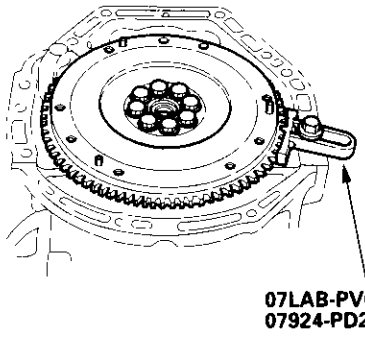


2. Remove the flywheel mounting bolts in a crisscross pattern in several steps, then remove the flywheel.
3. Remove the ball bearing (A) from the flywheel (B).

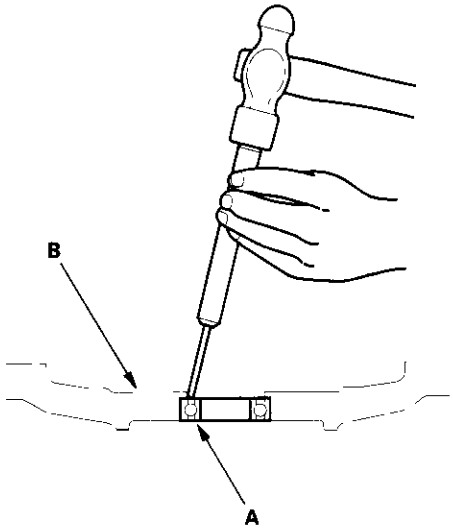


(cont'd)

## Clutch Replacement (cont'd)

4. Drive the new ball bearing into the flywheel using the special tools as shown. Apply a light coat of oil to the bearing surface.

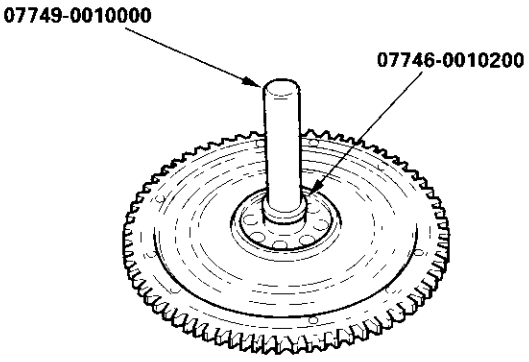


5. Align the hole in the flywheel with the crankshaft dowel pin, and install the flywheel. Install the washer and mounting bolts finger-tight.

6. Install the special tool, then torque the flywheel mounting bolts in a crisscross pattern in several steps.

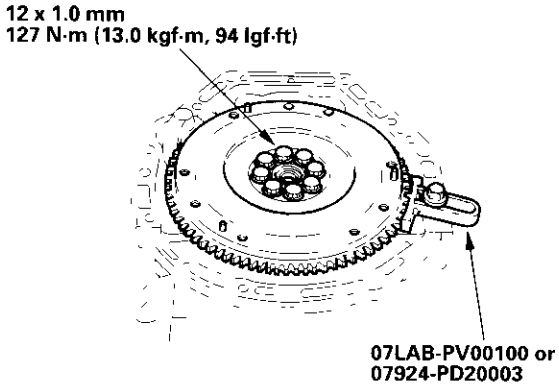


### Release Bearing Inspection

Check the release bearing for excessive play by spinning it by hand, if there is excessive play, replace the release bearing with a new one.

NOTE: The release bearing is packed with grease. Do not wash it in solvent.

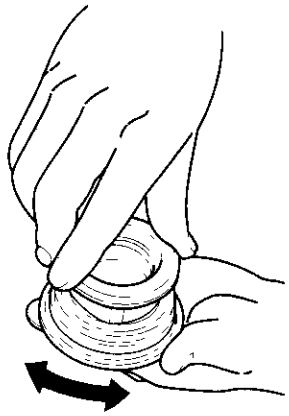

## Clutch Disc and Pressure Plate Installation

1. Apply a thin, uniform coat of super high temp urea grease (P/N 08798-9002) to the splines (A) of the clutch disc (B). Slide the clutch disc onto the mainshaft, and remove extra overflow grease.

2. Install the ring gear holder.

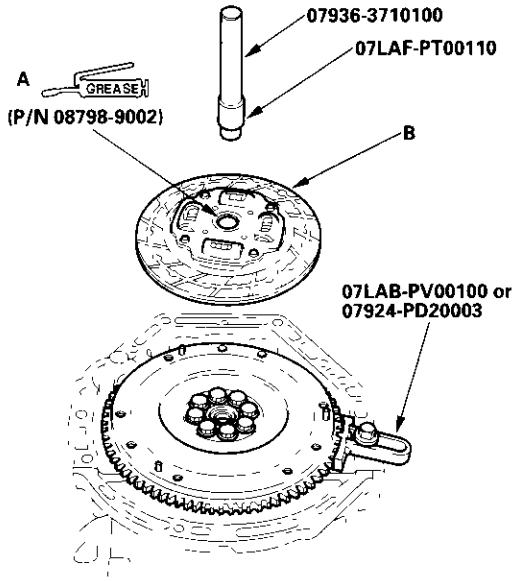


3. Install the clutch disc using the special tools.

4. Apply super high temp urea grease (P/N 08798-9002) into the groove (A) of the release bearing (B), then install the release bearing on the pressure plate (C).

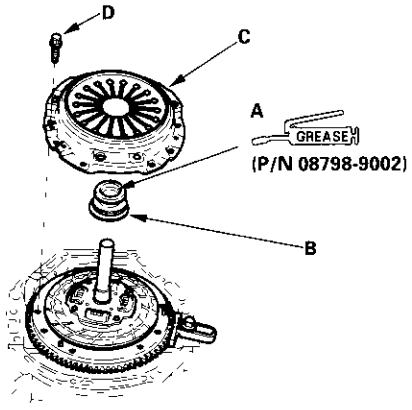


5. Install the pressure plate and the mounting bolts (D) finger-tight. Make sure the release bearing does not come off.

6. Torque the mounting bolts in a crisscross pattern. Tighten the bolts in several steps to prevent warping the diaphragm spring.

**PRESSURE PLATE MOUNTING BOLT TORQUE:**
**25 N·m (2.6 kgf·m, 19 lbf·ft)**

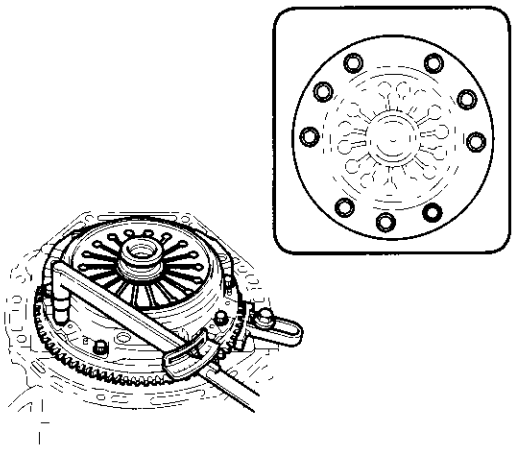

7. Remove the special tools.

8. Make sure the diaphragm spring fingers are all the same height.

# Transaxle

## Manual Transmission


Special Tools ..... 13-2
Transmission Fluid Inspection and Replacement ..... 13-3
Back-up Light Switch Test ..... 13-3
Gearshift Mechanism Replacement .....13-4
Transmission Removal ..... 13-5
Transmission Disassembly ..... 13-12
Mainshaft Assembly Clearance Inspection ..... 13-27
Mainshaft Disassembly ..... 13-30
Mainshaft Inspection ..... 13-31
Mainshaft Reassembly ..... 13-32
Shift Arm Rod Assembly Disassembly/Reassembly ..... 13-35
Countershaft Assembly Clearance Inspection ..... 13-36
Countershaft Disassembly ..... 13-38
Countershaft Inspection ..... 13-40
Countershaft Reassembly ..... 13-41
Secondary Shaft Disassembly ... 13-45
Secondary Shaft Inspection ..... 13-45
Secondary Shaft Reassembly .... 13-46
Shift Forks Clearance Inspection ..... 13-47
Shift Forks Disassembly /Reassembly ..... 13-49
Synchro Ring and Gear Inspection ..... 13-50
Synchro Sleeve and Hub Inspection and Reassembly .... 13-51
Oil Pump Clearance Inspection ..... 13-52
Secondary Shaft Preload Adjustment ..... 13-53
Mainshaft Thrust Clearance Adjustment ..... 13-54
Transmission Reassembly ..... 13-55
Transmission Installation ..... 13-66

## Special Tools

| Ref.No. | Tool Number | Description | Qty |
|---|---|---|---|
| **① | 07GAJ-PG20110 | Mainshaft Holder | 1 |
| **② | 07GAJ-PG20130 | Mainshaft Base | 1 |
| ③ | 07JAB-001020A | Holder Handle | 1 |
| ④ | 07LAD-PW50601 | Attachment, 40 x 50 mm I.D. | 1 |
| ⑤ | 07PAB-001A300 | Mainshaft Holder | 1 |
| ⑥ | 07RAB-TB4010B | Flange Holder | 1 |
| *⑦ | 07736-A01000B | Adjustable Bearing Puller, 20 -- 40 mm | 1 |
| ⑧ | 07746-0010300 | Attachment, 42 x 47 mm | 1 |
| ⑨ | 07746-0010500 | Attachment, 62 x 68 mm | 1 |
| ⑩ | 07746-0010600 | Attachment, 72 x 75 mm | 1 |
| ⑪ | 07746-0030100 | Driver, 40 mm I.D. | 1 |
| ⑫ | 07746-0030300 | Attachment, 30 mm I.D. | 1 |
| ⑬ | 07746-0030400 | Attachment, 35 mm I.D. | 1 |
| ⑭ | 07749-0010000 | Driver | 1 |
| ⑮ | 07946-MB00000 | Driver, 30 mm I.D. | 1 |
| ⑯ | 07947-6890300 | Attachment, 45 mm | 1 |
| ⑰ | 07965-SA50500 | Attachment, 35 mm I.D. | 1 |

* Must be used with commercially available 3/8"- 16 slide hammer.
* * Part of Mainshaft Inspection Tool Set, 07GAJ-PG2010A.

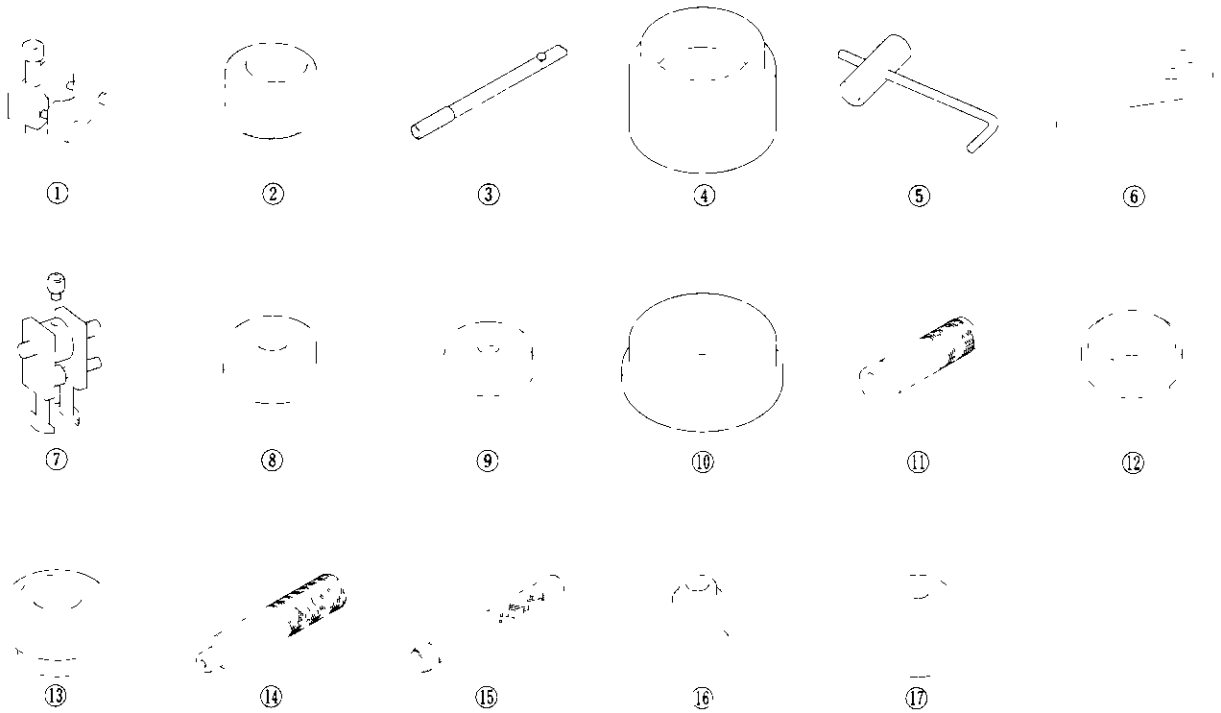

## Transmission Fluid Inspection and Replacement

1. Park the vehicle on level ground, and turn the engine OFF.

2. Remove the oil filler plug (A) and the washer (B), check the condition of the fluid, and make sure the fluid is at the proper level (C).

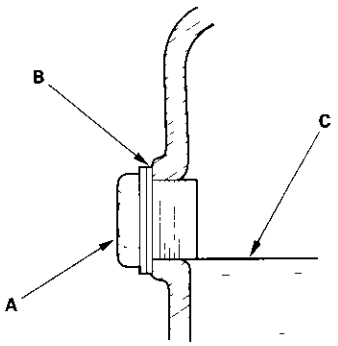


3. If the transmission fluid is dirty, remove the drain plug (A) and drain the fluid.

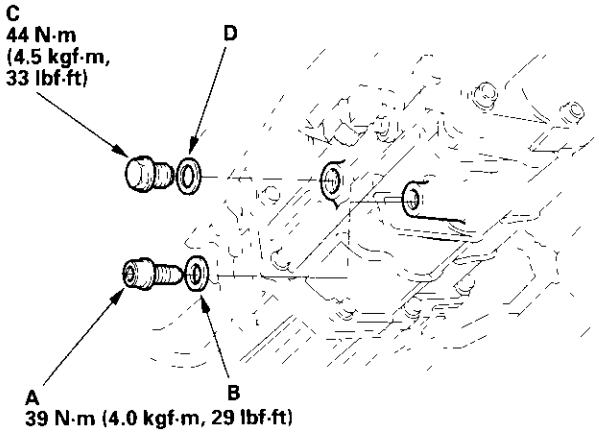


4. Reinstall the drain plug (A) with a new washer (B), and refill the transmission fluid to the proper level.

   **Fluid Capacity**
   **1.48 ℓ (1.56 US qt) at fluid change**
   **1.62 ℓ (1.71 US qt) at overhaul**

   Always use Honda Manual Transmission Fluid (MTF). If it is not available, you may use an API service SG, SH or SJ grade motor oil with a viscosity of SAE 10 W-30 or 10 W-40 as a temporary replacement.

5. Reinstall the oil filler plug (C) with a new washer (D).

## Back-Up Light Switch Test

1. Disconnect the back-up light switch (A) 2P connector.

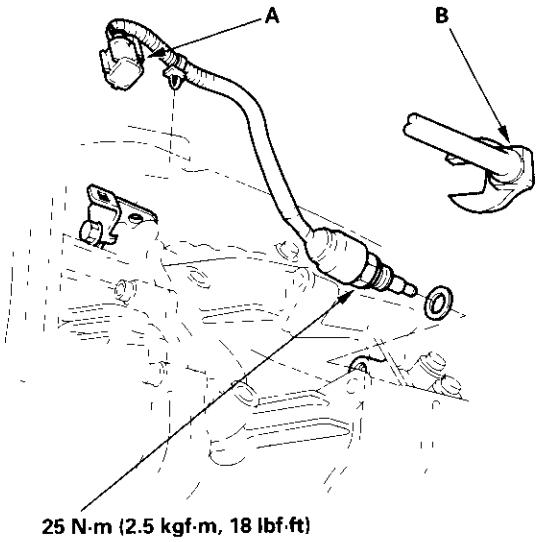


2. Check the continuity between the terminals. There should be continuity when the shift lever into reverse.

3. If necessary, replace the switch.

4. Remove the shift lever knob, boot holder, shift boot, shift lever, and the shift lever spring (see page 13-5).

5. Remove the three way catalytic converter (TWC) (see step 20 on page 13-8).

6. Remove the propeller shaft (see page 16-17).

7. Place the floor jack under the transmission, and remove the three transmission rear mount bolts (see step 31 on page 13-10).

8. Lower the transmission rear end 65 mm (2.56 in.), then remove the back-up light switch using a 3/8" crow foot wrench (19 mm) (B).

## Gearshift Mechanism Replacement

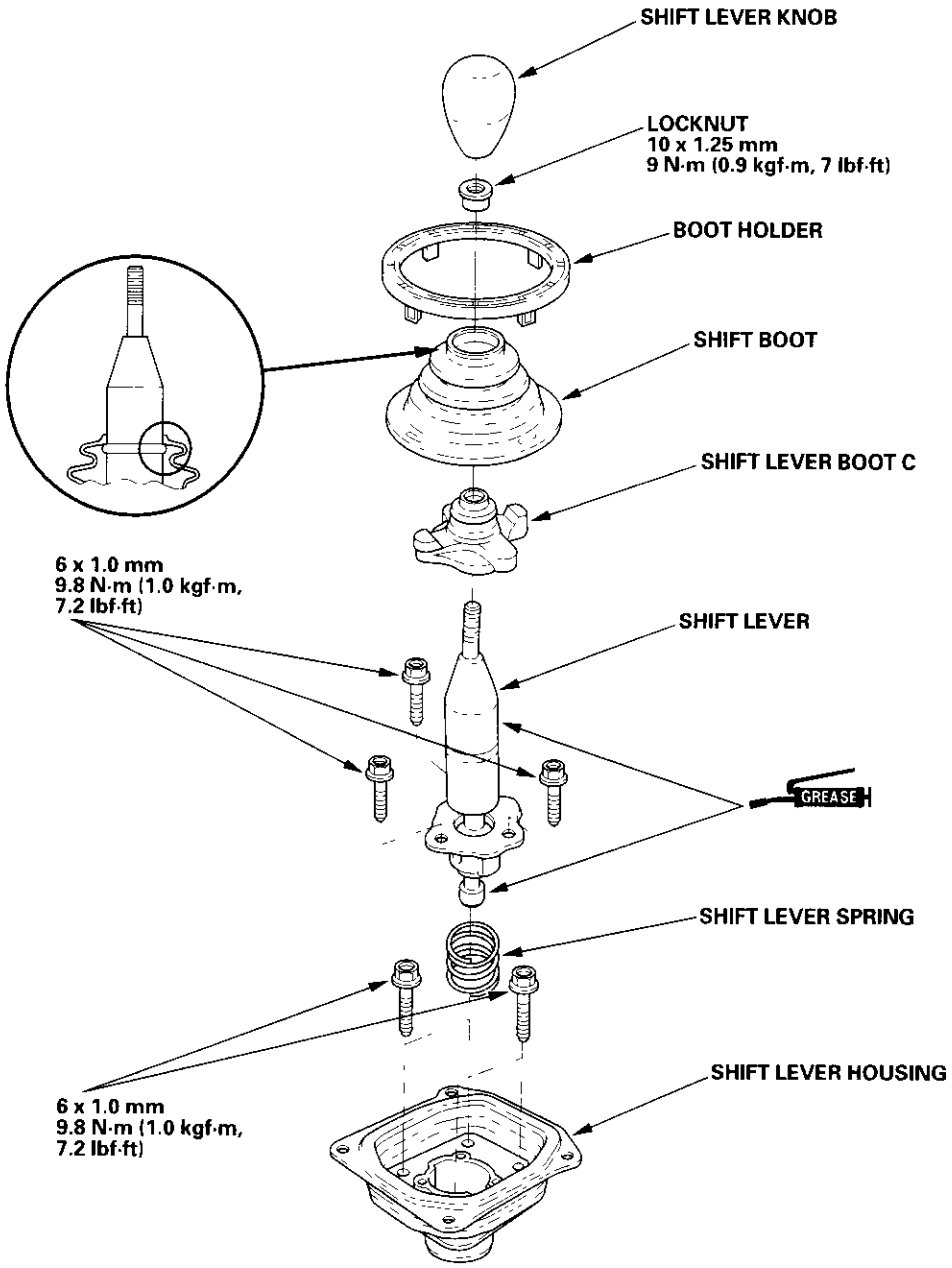

## Transmission Removal

NOTE: Use fender covers to avoid damaging painted surfaces.

1. Disconnect the negative (−) cable first, then the positive (+) cable from the battery. Remove the battery.
2. Loosen the locknut, then remove the shift lever knob.

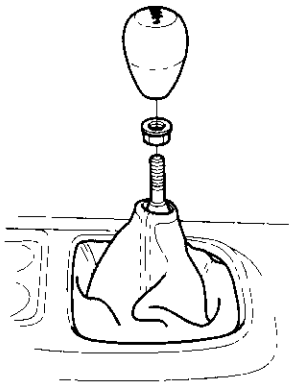

3. Remove the center console (see page 20-76).
4. Remove the boot holder (A) and the shift boot (B).

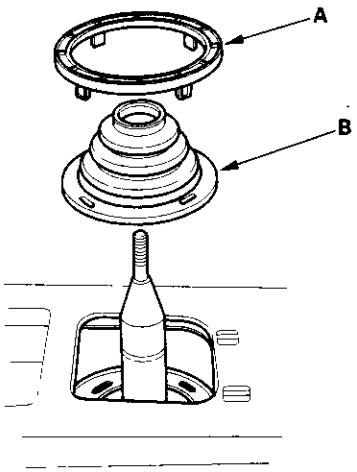


5. Remove the three bolts, then remove the shift lever (A) and the shift lever spring (B).

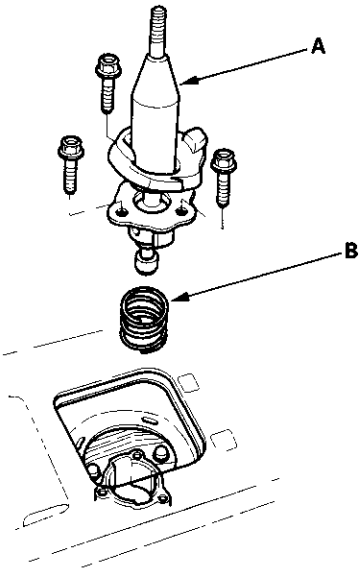


(cont'd)

## Transmission Removal (cont'd)

6. Remove the air cleaner housing assembly.

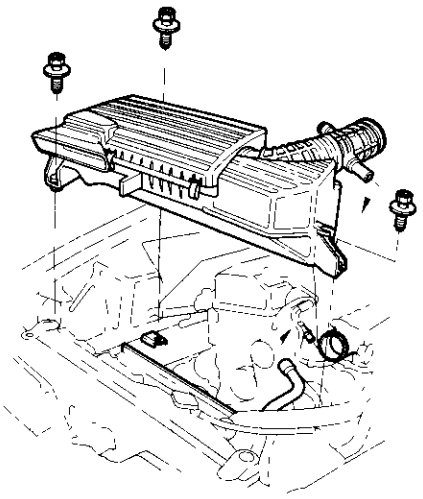

7. Turn the steering wheel to the straight-ahead position, then remove the key from the ignition switch to lock the steering column. Make a reference mark (A) across the steering joint (B).

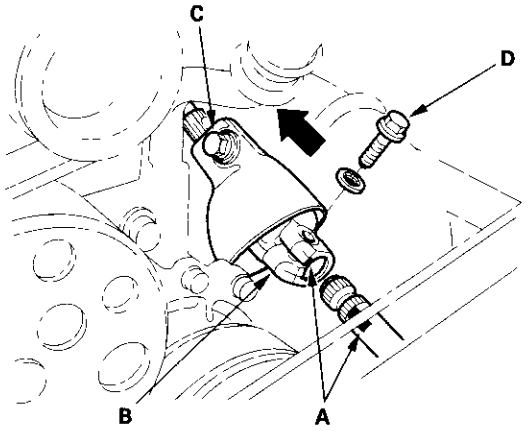


8. Loosen the upper steering joint bolt (C), and remove the lower steering joint bolt (D). Disconnect the steering joint from the gear box.

9. Remove the alternator-compressor belt and the alternator (see page 4-25).

10. Disconnect the 1P connector (A), then remove the four mounting bolts and the A/C compressor (B).

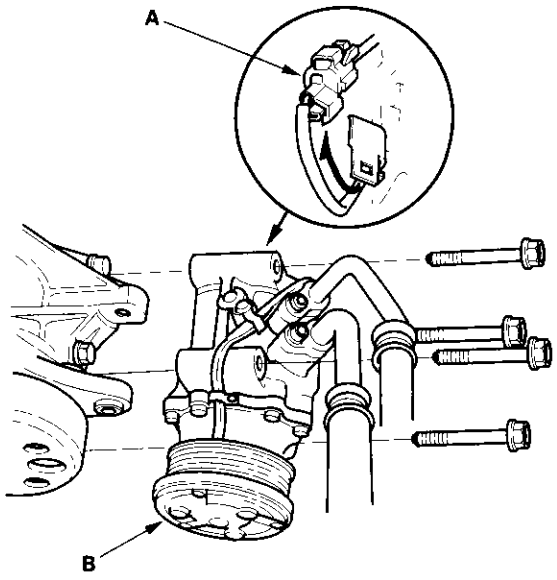


11. Remove the four exhaust manifold cover mounting bolts.

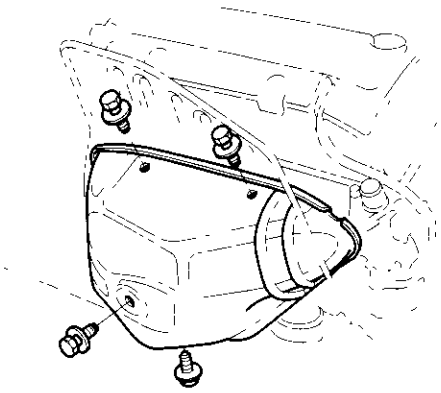

12. Remove the heat shield (A), then remove the exhaust manifold cover.

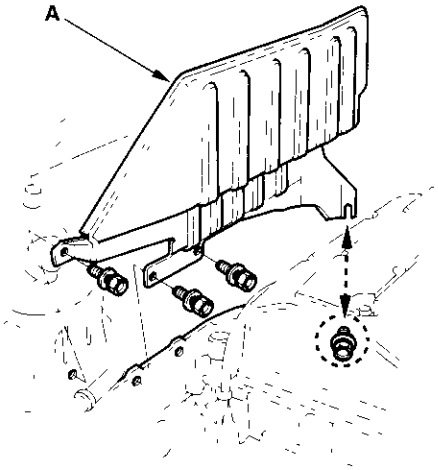


13. Remove the upper starter motor mounting bolt (A) and upper intake manifold bracket mounting bolt (B). Disconnect the hose (C) from the suction valve.

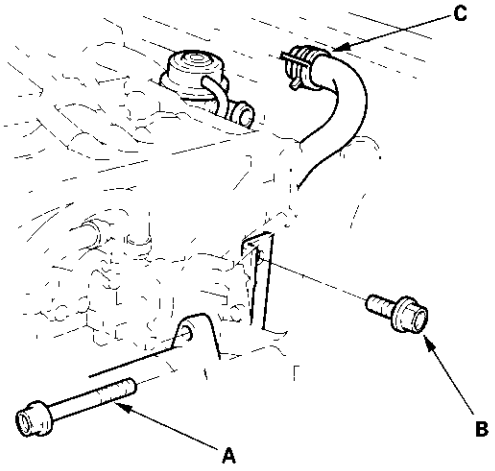


14. Disconnect the TDC1 (A) and TDC2 (B) sensor connectors.

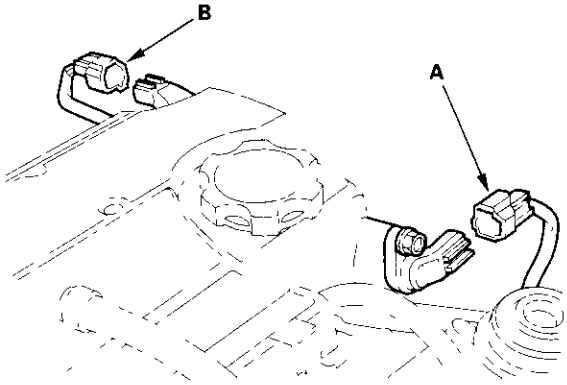


15. Remove the splash shield.

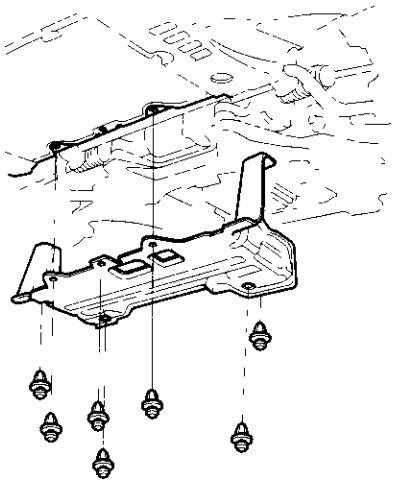

(cont'd)

## Transmission Removal (cont'd)

16. Disconnect the 2P connector (A) from the steering gearbox (B).

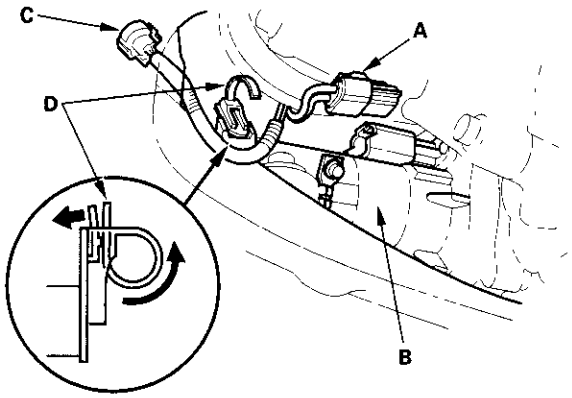


17. Disconnect the torque sensor 3P connector (C), and remove the wire harness clamp (D).

18. Remove the wire harness (A) and mounting bolt, then remove the intake manifold stay (B).

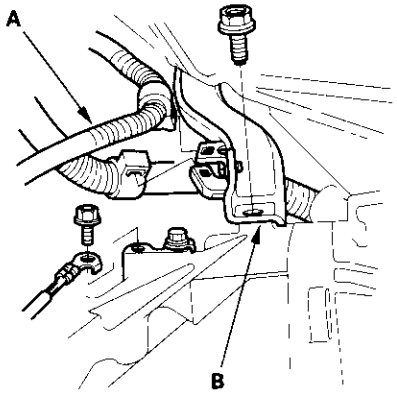


19. Disconnect the heated oxygen sensor (HO2S) (A), secondary heated oxygen sensor (secondary HO2S) (B), and the back-up light switch (C) connectors, then remove the wire harness from the transmission.

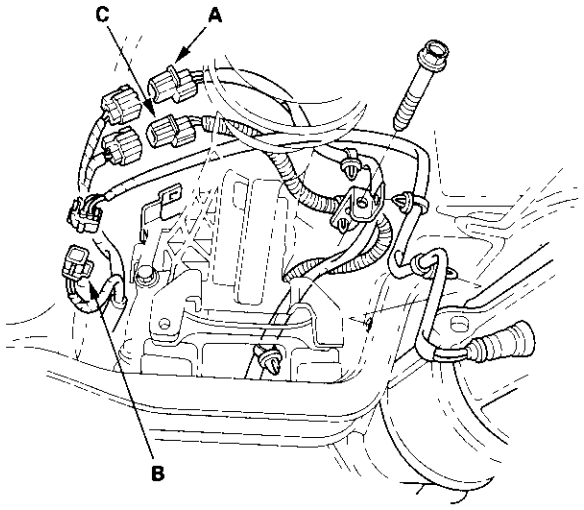


20. Remove the three way catalytic converter (TWC) (A) and gaskets (B).

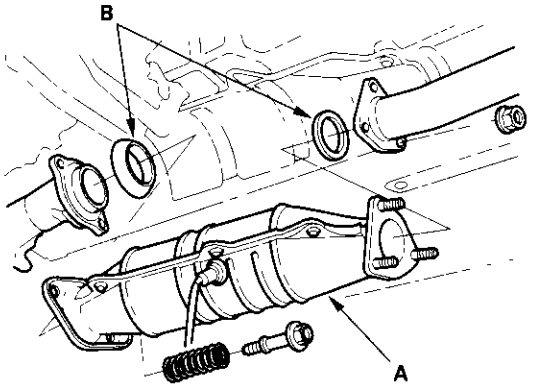

21. Remove the exhaust manifold bracket (A) and the exhaust manifold (B).

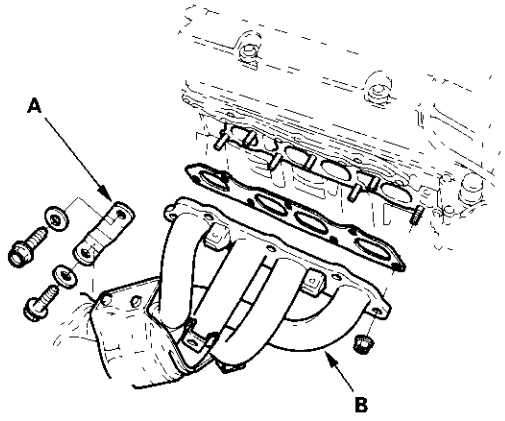


22. Remove the propeller shaft (see page 16-17).

23. Remove the four shift boot holder mounting bolts.

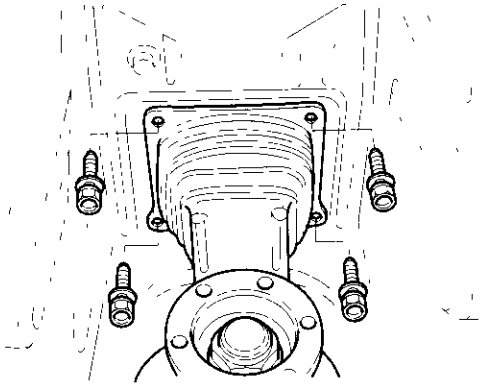

24. Remove the release fork boot (A), then carefully remove the slave cylinder (B). Do not operate the clutch pedal once the slave cylinder has been removed.

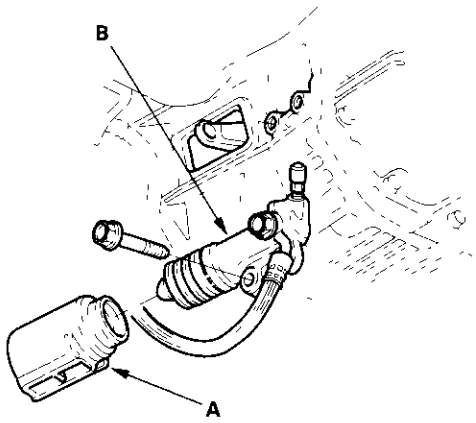


25. Pull out the release fork (A) from the release fork hanger. Wedge a shop towel (B) between the opening in the clutch housing and the release fork to hold the release fork in place.

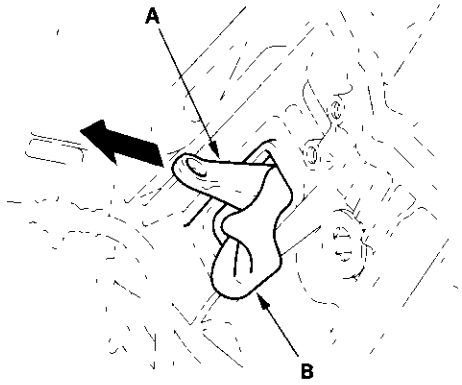


(cont'd)

## Transmission Removal (cont'd)

26. Remove the five lower transmission mounting bolts.

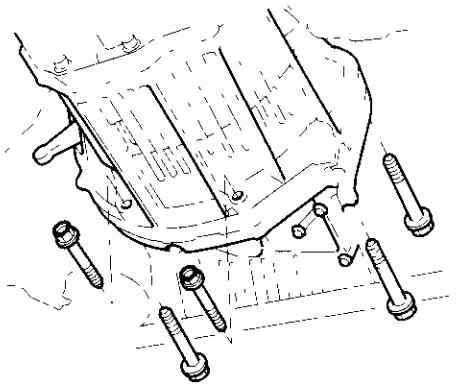

27. Place a floor jack under the front sub frame and the engine mounting stiffener.

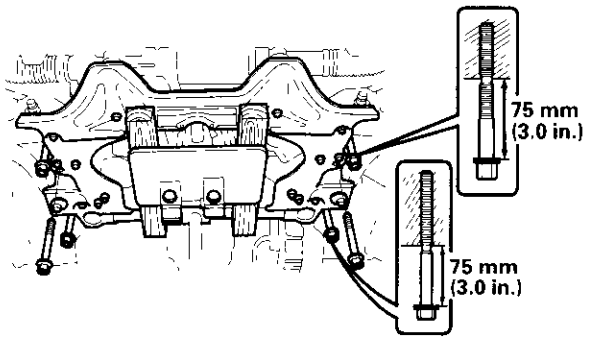


28. Remove the two center mounting bolts.

29. Loosen the four mounting bolts 75 mm (3.0 in.) as shown.

30. Lower the front subframe in until it touches the four loosened mounting bolts.

31. Place the floor jack under the transmission, and remove the three transmission rear mount bolts.

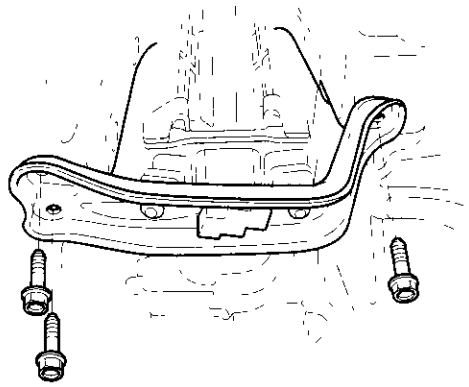

32. Lower the transmission. Disconnect the pick-up sensor connector (A), then remove the wire harness (B) from the transmission.

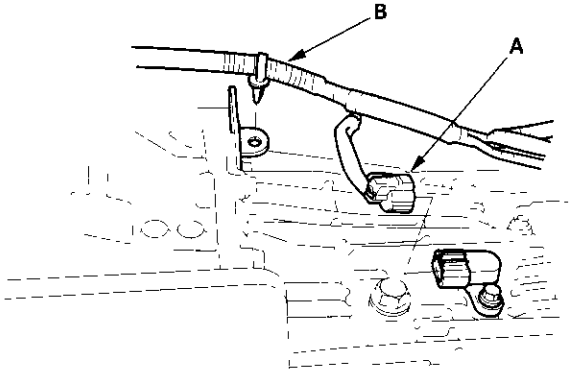

33. Remove the three upper transmission mounting bolts.

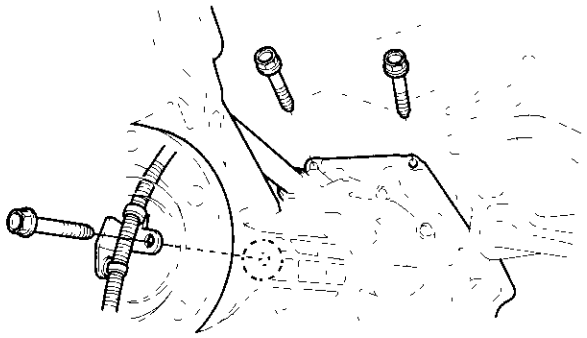

34. Pull the transmission away from the engine until it clears the mainshaft, then lower the transmission on the jack.

35. Remove the transmission rear mount from the transmission housing.

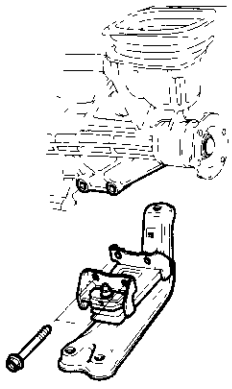

## Transmission Disassembly

### Exploded View-Rear Cover

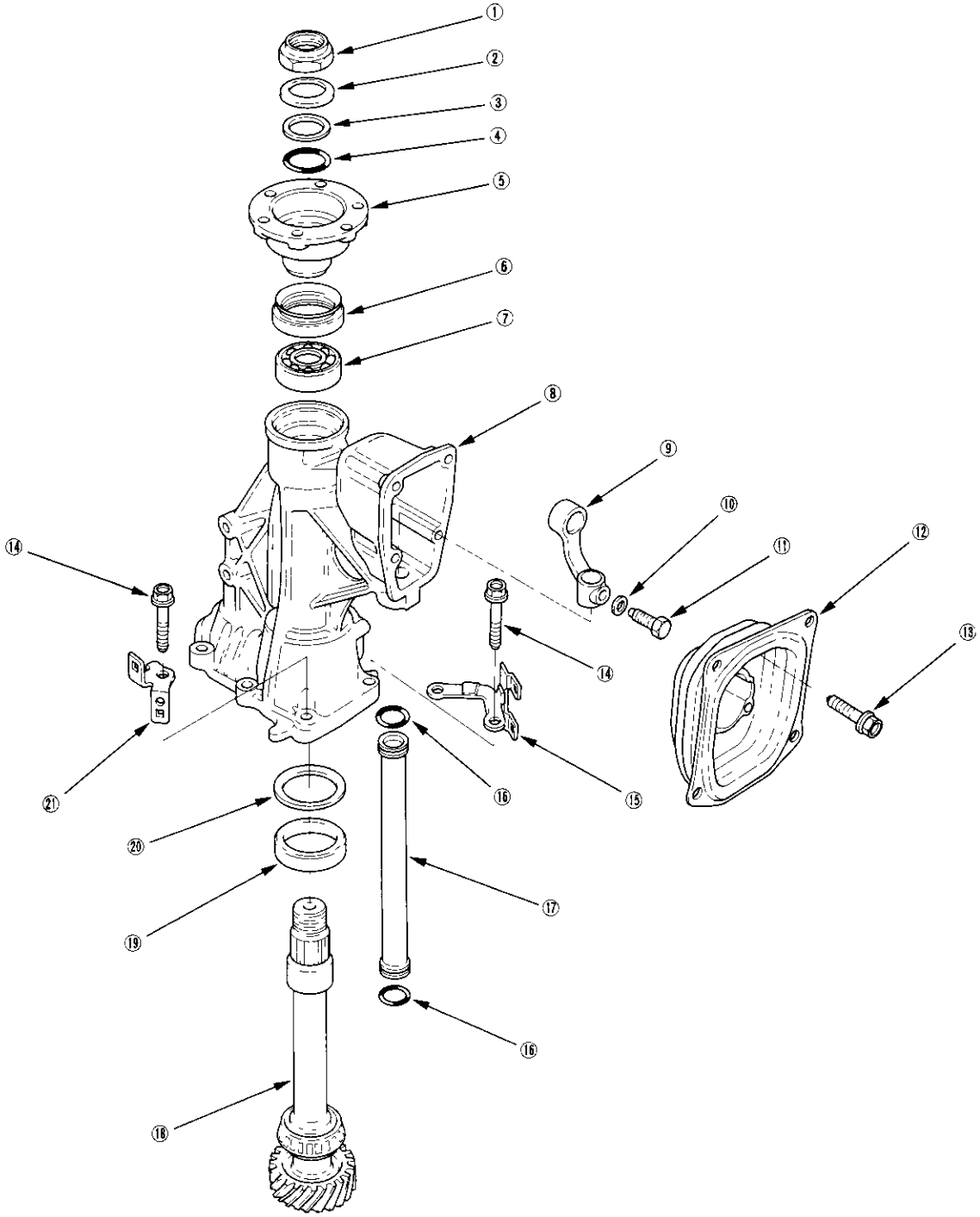

① **27 mm LOCKNUT**
Replace.
**162 → 0 → 162 N·m (16.5 → 0 → 16.5 kgf·m, 119 → 0 → 119 lbf·ft)**

② **27 mm SPRING WASHER**

③ **BACK-UP RING**

④ **O-RING**
Replace.

⑤ **COMPANION FLANGE**

⑥ **40 x 60 X 9 mm OIL SEAL**
Replace.

⑦ **BALL BEARING**
Replace.

⑧ **REAR COVER**

⑨ **SHIFT ARM B**

⑩ **CONICAL SPRING WASHER**
Replace.

⑪ **8 mm SPECIAL BOLT**
**31 N·m (3.1 kgf·m, 22 lbf·ft)**

⑫ **SHIFT LEVER HOUSING**

⑬ **6 mm FLANGE BOLT**
**12 N·m (1.2 kgf·m, 8.7 lbf·ft)**

⑭ **8 mm FLANGE BOLT**
**27 N·m (2.8 kgf·m, 20 lbf·ft)**

⑮ **HARNESS BRACKET**

⑯ **O-RING**
Replace.

⑰ **SHIFT ROD TUBE**

⑱ **SECONDARY SHAFT ASSEMBLY**
See page 13-45

⑲ **BEARING OUTER RACE**

⑳ **SHIM**

㉑ **HARNESS CLAMP**

(cont'd)

## Transmission Disassembly (cont'd)

### Exploded View-Transmission Housing

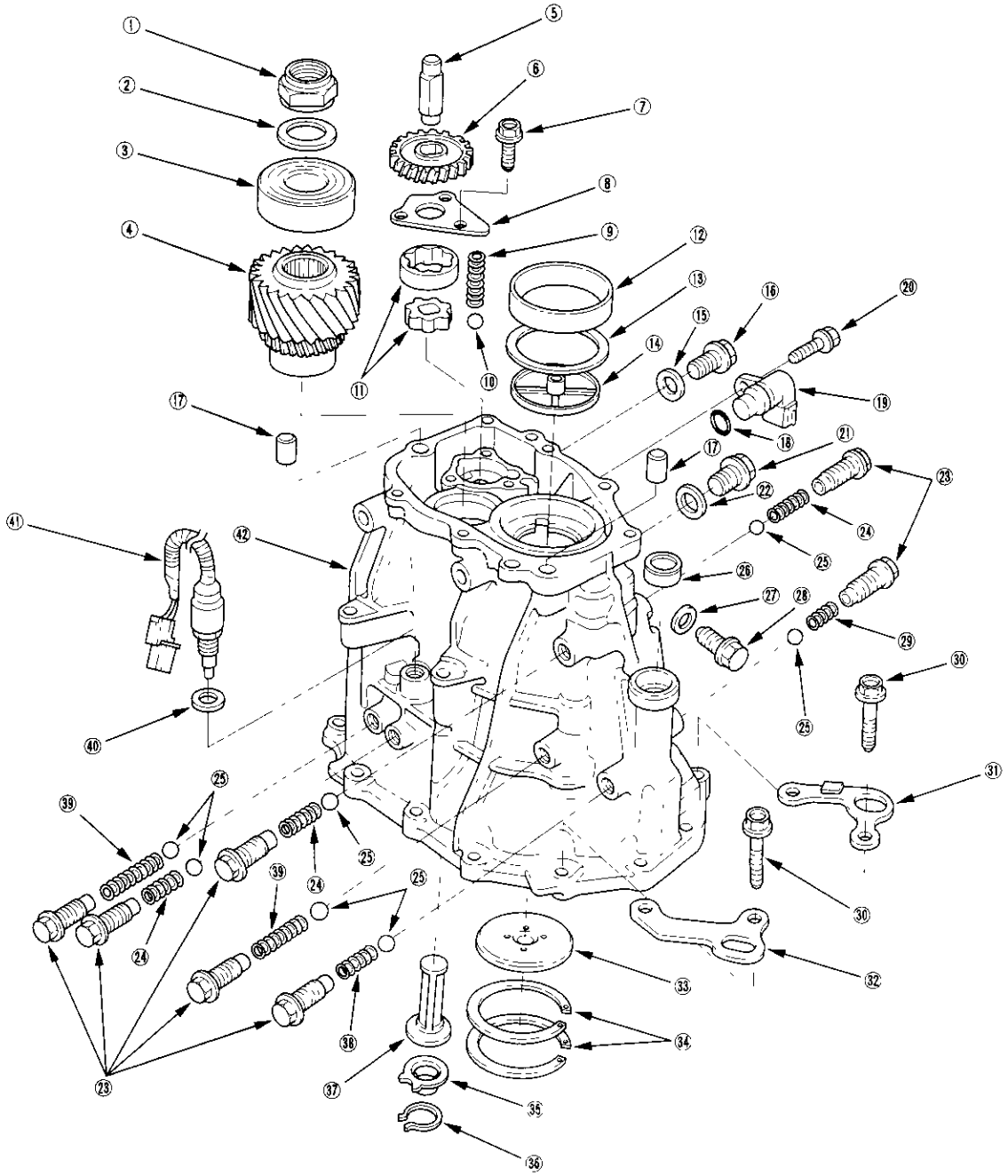

① **29 mm LOCKNUT (Left-hand threads)**
Replace.
**172 → 0 → 172 N·m (17.5 → 0 → 17.5 kgf·m, 127 → 0 → 127 lbf·ft)**

② **29 mm SPRING WASHER**

③ **30 x 64 x 20 mm NEEDLE BEARING**

④ **SECONDARY DRIVE GEAR**

⑤ **OIL PUMP SHAFT**

⑥ **OIL PUMP GEAR**

⑦ **6 mm FLANGE BOLT**
**12 N·m (1.2 kgf·m, 8.7 lbf·ft)**

⑧ **OIL PUMP PLATE**

⑨ **SPRING L. 19.1 mm (0.75 in.)**

⑩ **STEEL BALL**

⑪ **OIL PUMP ROTOR**

⑫ **BEARING OUTER RACE**

⑬ **SHIM**
Selection.

⑭ **OIL GUIDE PLATE S**

⑮ **WASHER**
Replace.

⑯ **DRAIN PLUG**
**39 N·m (4.0 kgf·m, 29 lbf·ft)**

⑰ **14 x 20 DOWEL PIN**

⑱ **O-RING**
Replace.

⑲ **PICK-UP SENSOR**

⑳ **6 mm FLANGE BOLT**
**12 N·m (1.2 kgf·m, 8.7 lbf·ft)**

㉑ **FILLER PLUG**
**44 N·m (4.5 kgf·m, 33 lbf·ft)**

㉒ **WASHER**
Replace.

㉓ **SET SCREW**

㉔ **SPRING L. 27.4 mm (1.08 in.)**

㉕ **STEEL BALL**

㉖ **16 x 26 x 7 mm OIL SEAL**
Replace.

㉗ **12 mm WASHER**
Replace.

㉘ **12 mm DRAIN PLUG**
**39 N·m (4.0 kgf·m, 29 lbf·ft)**

㉙ **SPRING L. 23 mm (0.91 in.) (BLACK)**

㉚ **8 mm FLANGE BOLT**
**27 N·m (2.8 kgf·m, 20 lbf·ft)**

㉛ **TRANSMISSION HANGER A**

㉜ **TRANSMISSION HANGER**

㉝ **OIL GUIDE PLATE M**

㉞ **82 mm SHIM**
Selection.

㉟ **SUCTION GUIDE**

㊱ **CIRCLIP**

㊲ **OIL PUMP STRAINER**

㊳ **SPRING L. 23 mm (0.91 in.) (SILVER)**

㊴ **SPRING L. 32 mm (1.26 in.)**

㊵ **WASHER**
Replace.

㊶ **BACK-UP LIGHT SWITCH**

㊷ **TRANSMISSION HOUSING**

(cont'd)

## Transmission Disassembly (cont'd)

### Exploded View-Clutch Housing

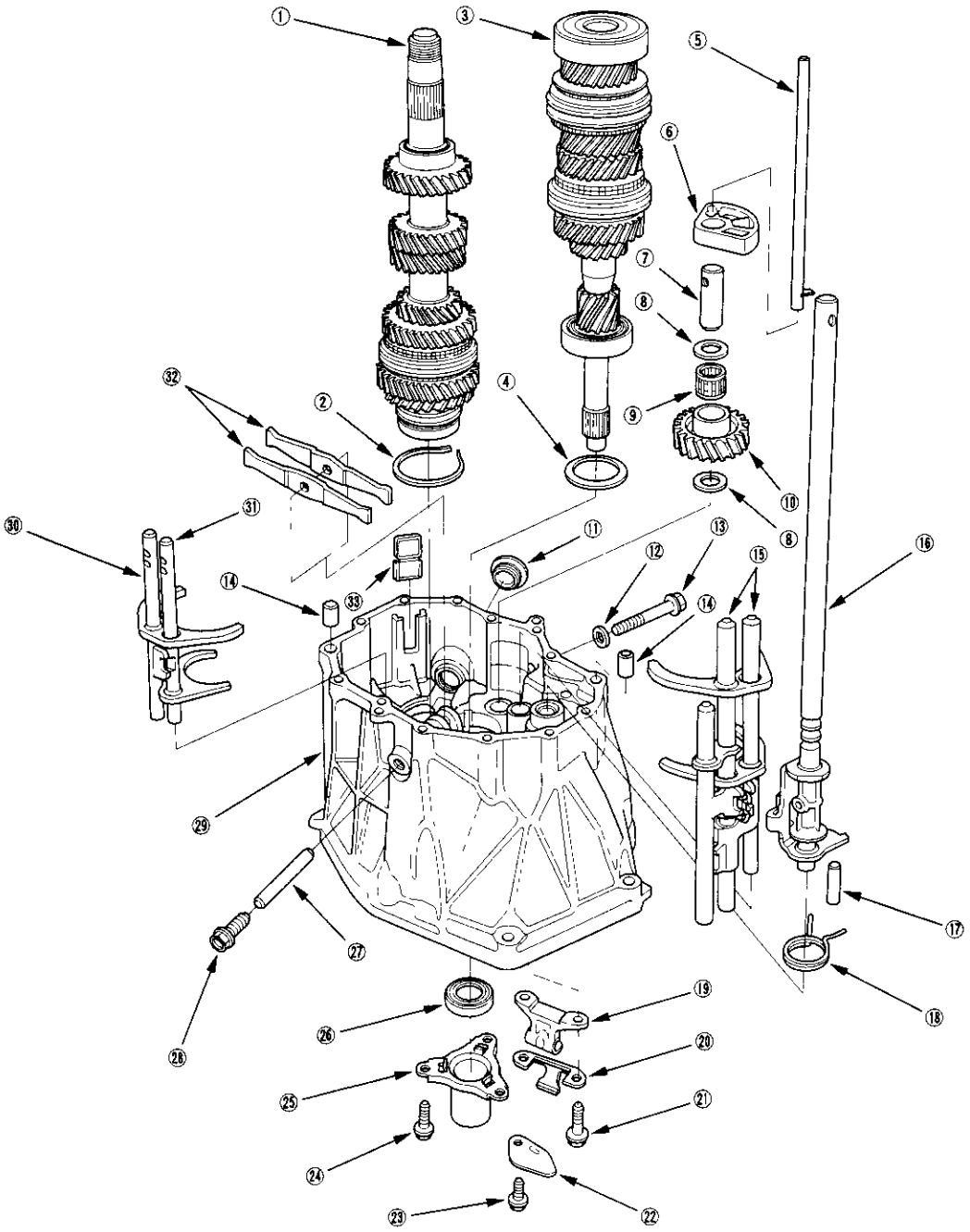

① COUNTERSHAFT ASSEMBLY
② 68 mm SNAP RING
③ MAINSHAFT ASSEMBLY
④ 64 mm SPRING WASHER
⑤ OIL GUIDE TUBE
⑥ REVERSE SHAFT HOLDER
⑦ REVERSE GEAR SHAFT
⑧ THRUST WASHER
⑨ 20 x 25 x 26.5 mm NEEDLE BEARING
⑩ REVERSE IDLER GEAR
⑪ 34 mm SEALING BOLT
69 N·m (7.0 kgf·m, 51 lbf·ft)
⑫ 8 mm WASHER
Replace.
⑬ 8 mm FLANGE BOLT
34 N·m (3.5 kgf·m, 25 lbf·ft)
⑭ 14 x 20 DOWEL PIN
⑮ SHIFT FORK ASSEMBLY
⑯ SHIFT ARM ROD ASSEMBLY
⑰ 8 x 40 PIN
⑱ SELECT RETURN SPRING
⑲ CLUTCH RELEASE HANGER
⑳ RELEASE HANGER SPRING
㉑ 8 mm SPECIAL BOLT
27 N·m (2.8 kgf·m, 20 lbf·ft)
㉒ BREATHER PLATE
㉓ 6 mm FLANGE BOLT
12 N·m (1.2 kgf·m, 8.7 lbf·ft)
㉔ 6 mm FLANGE BOLT
12 N·m (1.2 kgf·m, 8.7 lbf·ft)
㉕ RELEASE BEARING GUIDE
㉖ 28 x 43 x 7 mm OIL SEAL
Replace.
㉗ 8 x 63 PIN
㉘ 10 mm FLANGE BOLT
44 N·m (4.5 kgf·m, 33 lbf·ft)
㉙ CLUTCH HOUSING
㉚ 1-2 SHIFT FORK
㉛ REVERSE SHIFT FORK
㉜ 1-2 SHIFT LEVER
㉝ MAGNET

(cont'd)

## Transmission Disassembly (cont'd)

**Special Tools Required**
- Flange holder 07RAB-TB4010B
- Adjustable bearing puller, 20 – 40 mm 07736-A01000B
- Mainshaft holder 07PAB-001A300
- Holder handle 07JAB-001020A

### Rear Cover Removal

1. Remove the four bolt, and remove the shift lever housing.

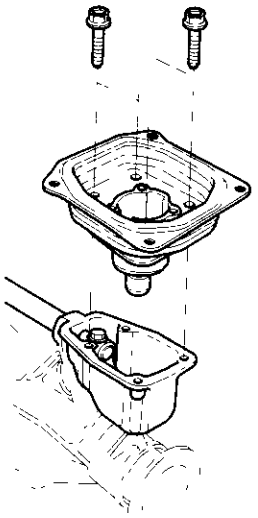

2. Lower the shift rod (A), then remove the 8 mm special bolt (B), spring washer (C), and shift arm B (D).

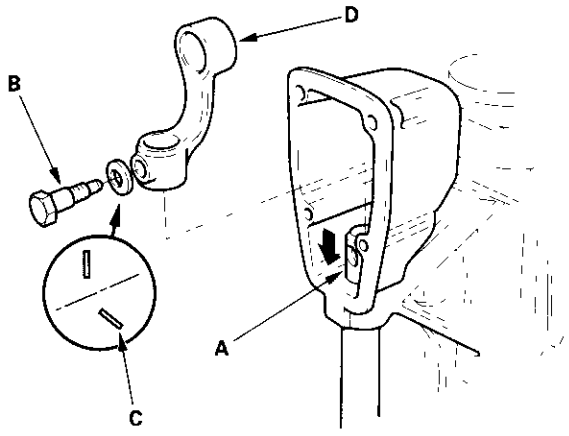


3. Remove the 8 mm flange bolts in a crisscross pattern in several steps.

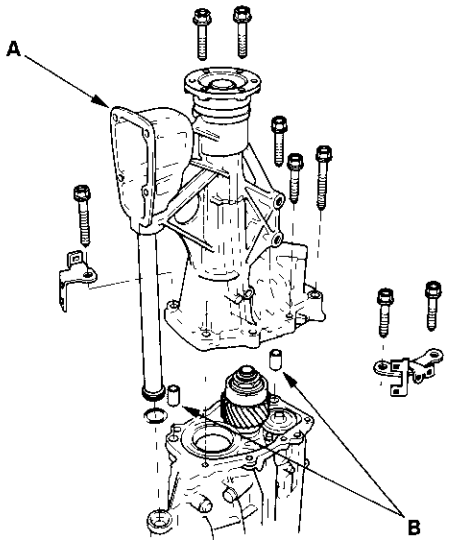


4. Remove the rear cover (A) and 14 x 20 dowel pins (B).

5. Remove the shift rod tube and O-rings from the rear cover.

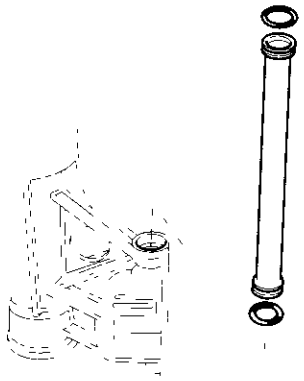

6. Raise the 27 mm locknut tab from the groove in the secondary shaft.

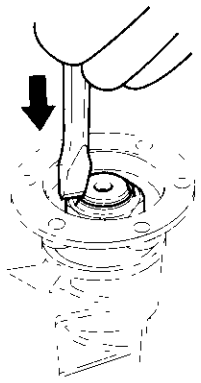

7. Install the special tool onto the companion flange, and loosen the 27 mm locknut.

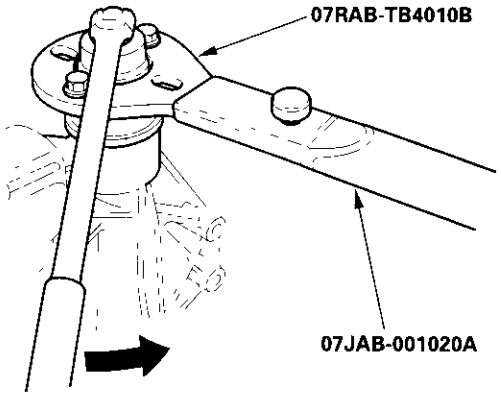


8. Remove the 27 mm locknut (A), spring washer (B), back-up ring (C), and O-ring (D).

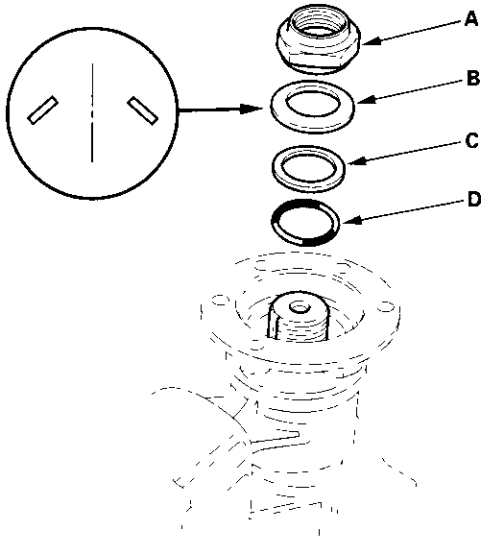


9. Remove the companion flange (A) using a commercially available bearing puller (B) as shown.

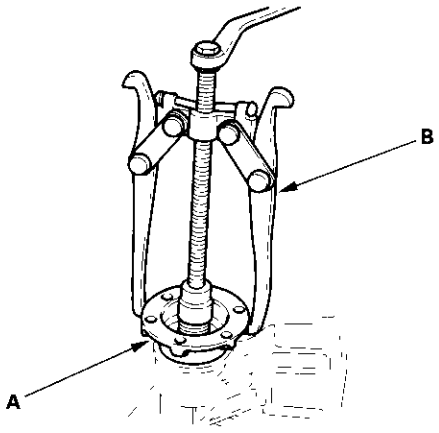


(cont'd)

## Transmission Disassembly (cont'd)

10. Remove the oil seal.

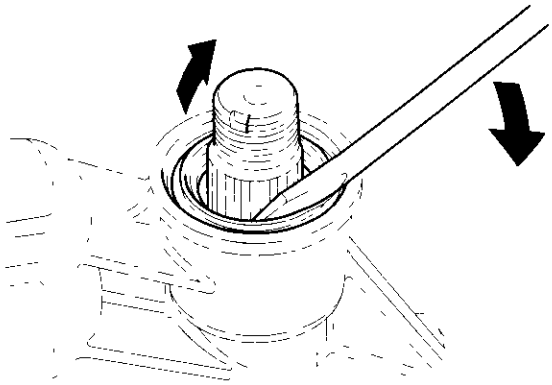

11. Remove the secondary shaft (A) from the rear cover (B) using a press (C) as shown.

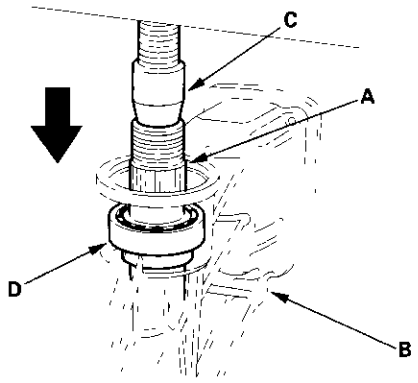


12. Remove the ball bearing (D) from the rear cover.

13. Remove the bearing outer race (A) and shim (B) from the rear cover (C).

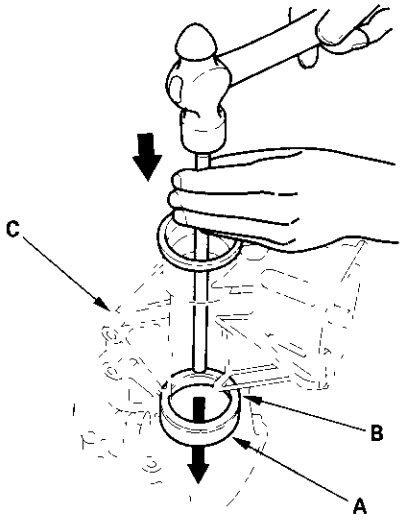


14. Remove the bearing outer race (A) from the rear cover (B) using the special tools as shown.

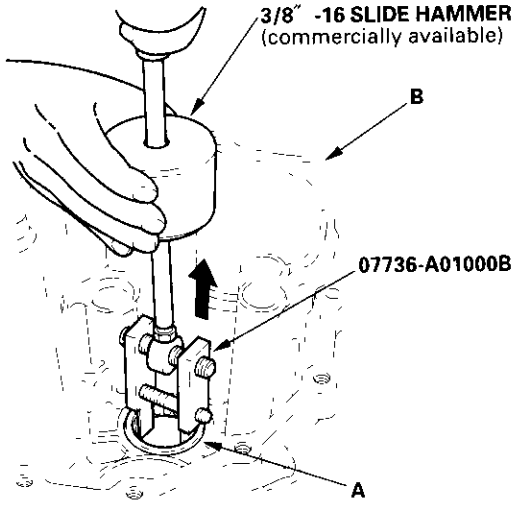

## Transmission Housing Removal

1. Remove the oil pump gear shaft and oil pump gear.

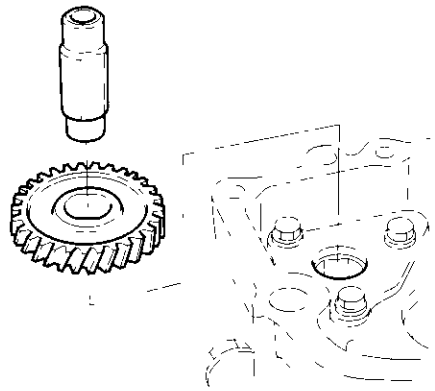

2. Raise the 29 mm locknut tab from the groove in the countershaft.

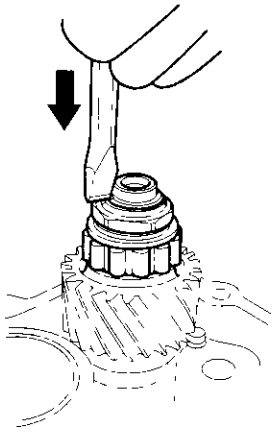

3. Install the special tool onto the mainshaft spline, and loosen the 29 mm locknut (left-hand threads).

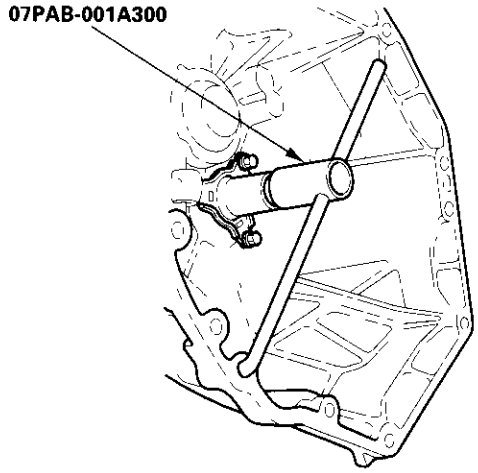


4. Remove the 29 mm locknut and spring washer.

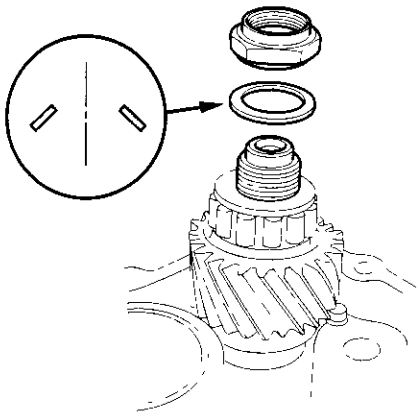

(cont'd)

## Transmission Disassembly (cont'd)

5. Remove the needle bearing (A) using a commercially available bearing puller (B) as shown.

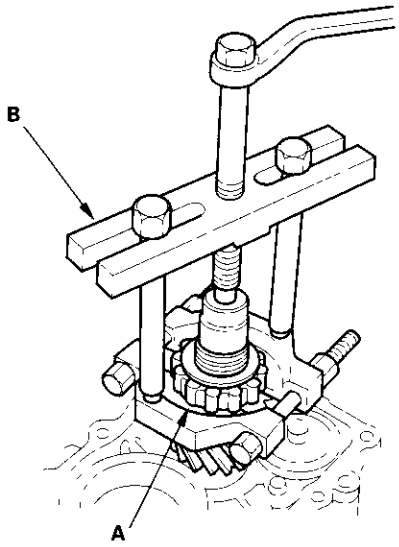


6. Remove the secondary drive gear (A) using a commercially available bearing puller (B) as shown.

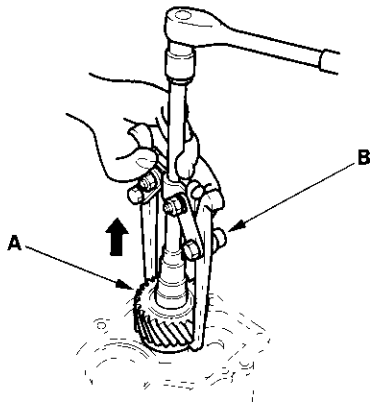


7. Remove the 6 mm flange bolts, then remove the oil pump plate (A), spring, steel ball, and oil pump rotors (B).

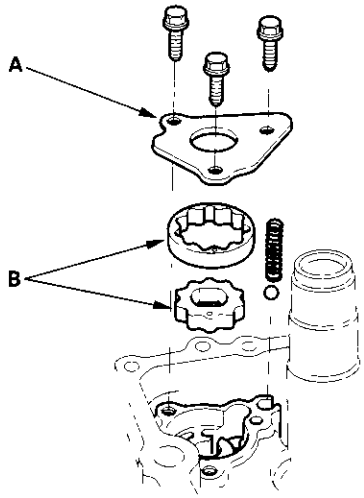


8. Remove the drain plug (A), filler plug (B), 12 mm drain plug (C), washers, set screws (D), springs, steel balls, and pick-up sensor (E).

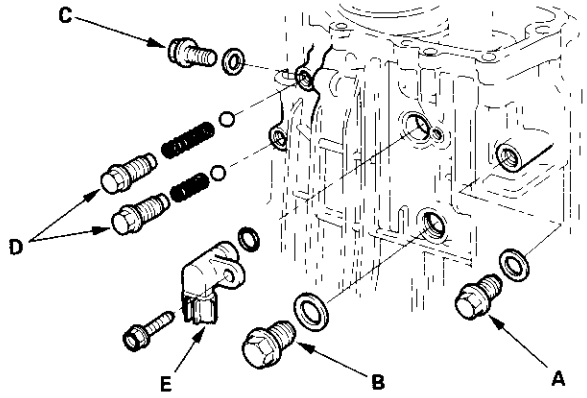

9. Remove the set screws (A), springs, steel balls, back-up light switch (B), and washer.

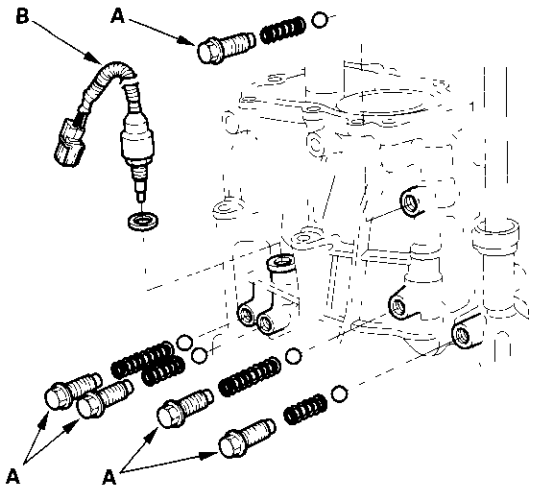


10. Remove the 8 mm flange bolts in a crisscross pattern in several steps.

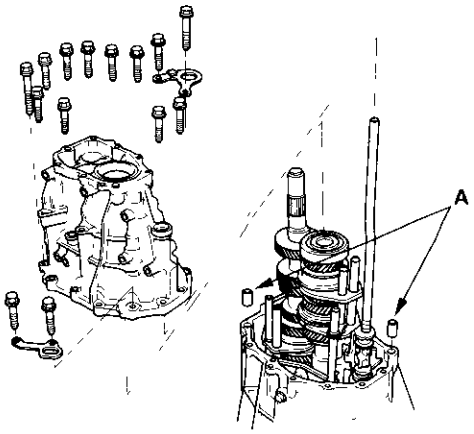


11. Remove the transmission housing and 14 x 20 dowel pins (A).

12. Remove the bearing outer race (A) using the special tool as shown, then remove the shim (B) and oil guide plate S.

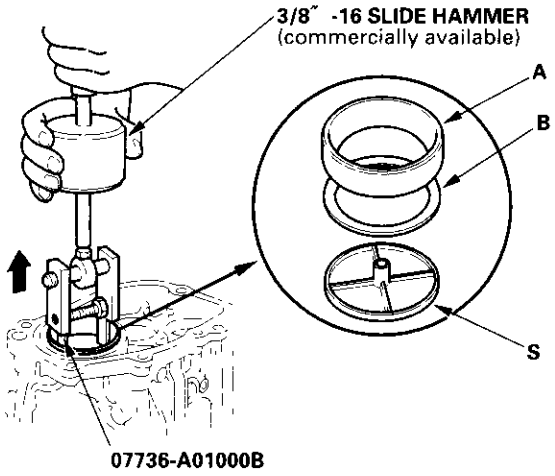


13. Remove the 16 x 26 x 7 mm oil seal from the transmission housing.

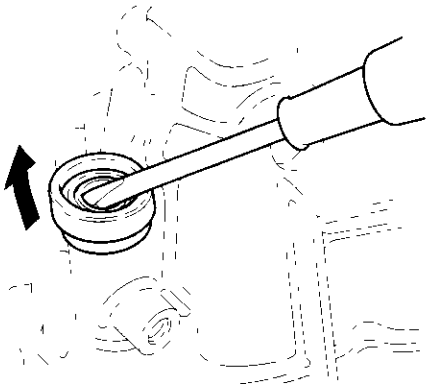

(cont'd)

## Transmission Disassembly (cont'd)

14. Remove the circlip (A), then remove the suction guide (B) and oil pump strainer (C) from the transmission housing.

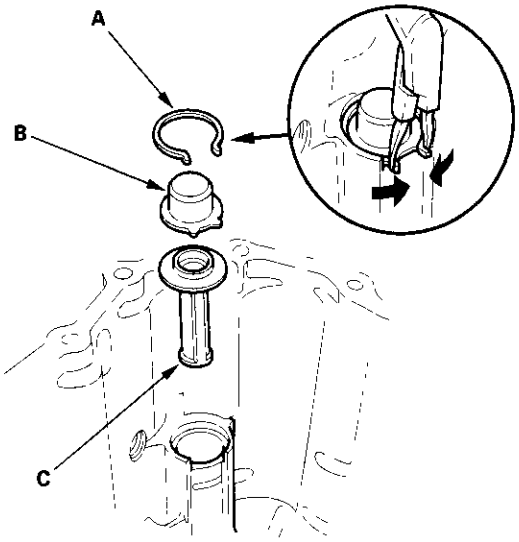


15. Remove the 82 mm shim(s) (A) and oil guide plate M.

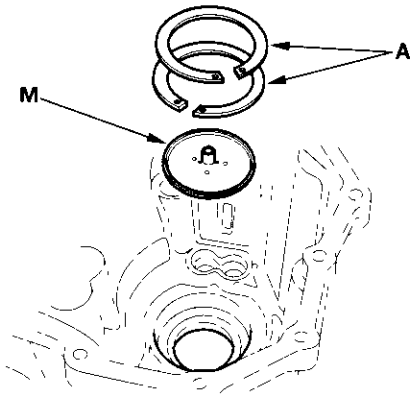


16. Remove the oil guide tube (A) and magnet (B).

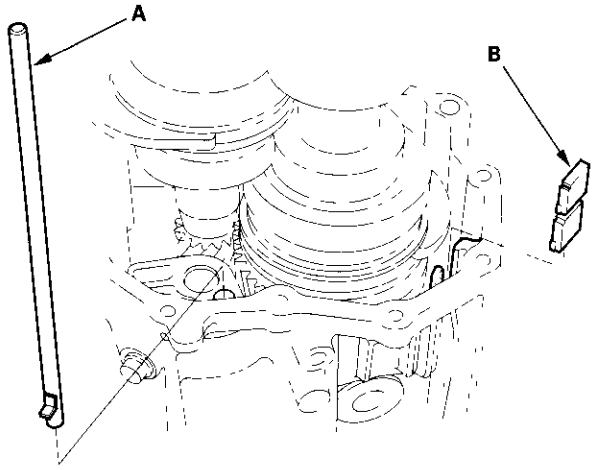


17. Remove the 8 mm flange bolt and washer, then remove the reverse shaft holder (A), thrust washer (B), reverse gear shaft (C), and needle bearing (D).

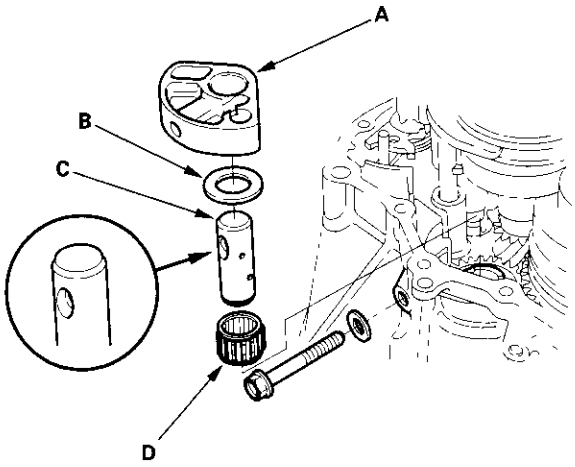

18. Remove the 10 mm flange bolt, then remove the 8 x 63 pin (A) and 1-2 shift levers (B).

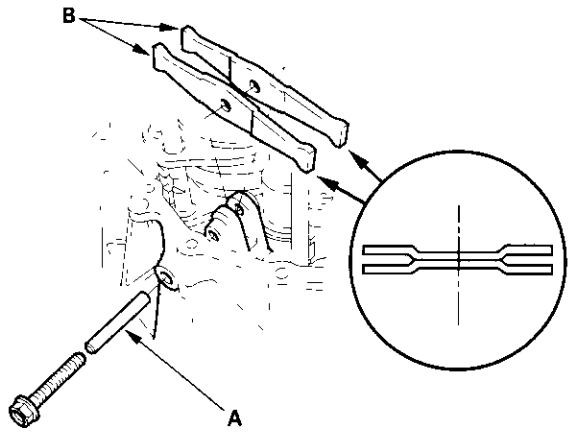


19. Remove the 5 x 25 spring pin (B) from shift arm A with a 5 mm pin driver, then remove the shift rod (C).

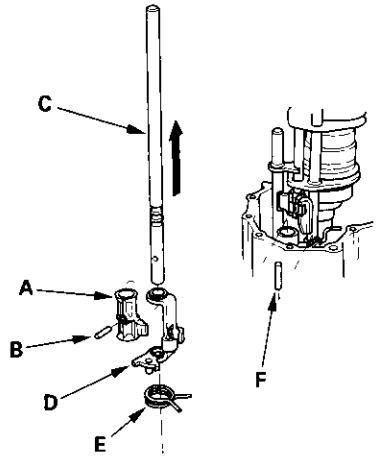


20. Remove the shift arm A from the interlock (D), then remove the select return spring (E) and the 8×40 pin (F).

21. Remove the 1-2 shift piece.

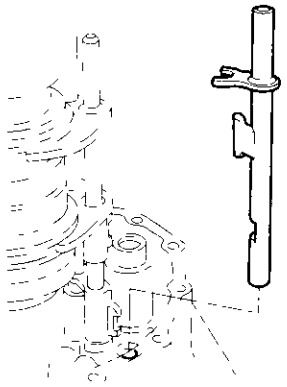

22. Remove the 34 mm sealing bolt (A) from the clutch housing.

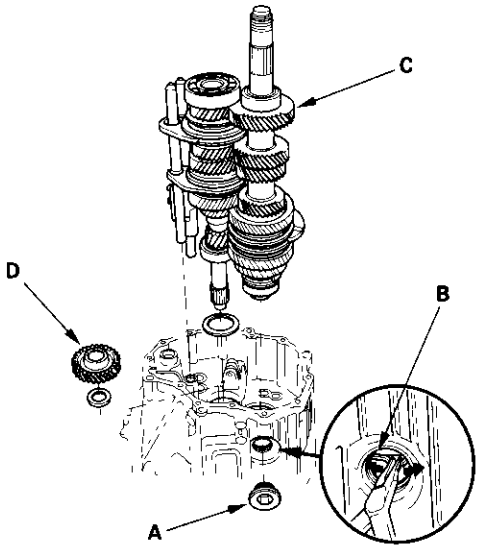


23. Expand the 68 mm snap ring (B) on the countershaft ball bearing, and remove it from the groove using a pair of snap ring pliers.

24. Remove the mainshaft, countershaft, and shift forks assemblies (C), and remove the 64 mm spring washer, reverse idler gear (D), thrust washer.

(cont'd)

## Transmission Disassembly (cont'd)

25. Remove the 6 mm flange bolts and release bearing guide (A).

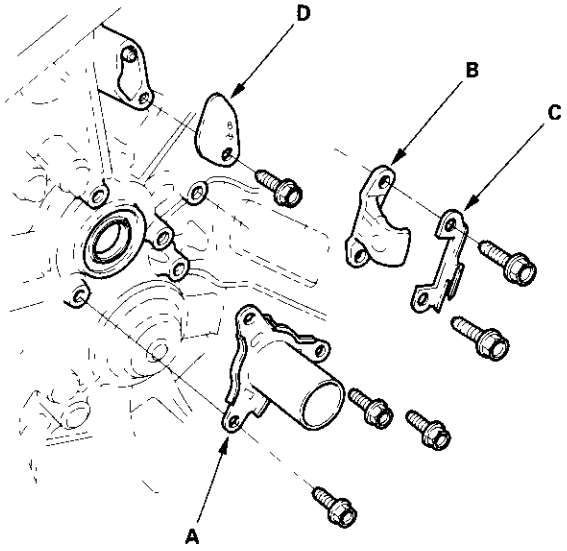


26. Remove the 8 mm special bolts, clutch release hanger (B) and release hanger spring (C).

27. Remove the 6 mm flange bolts and breather plate (D).

28. Remove the oil seal from the clutch housing.

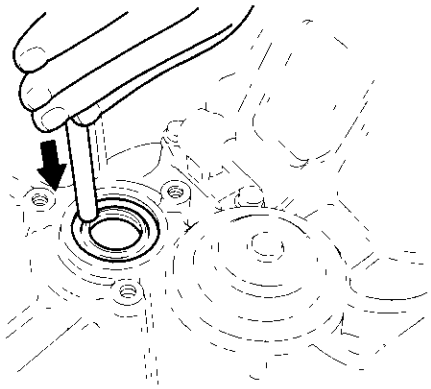

## Mainshaft Assembly Clearance Inspection

NOTE:
- If replacement is required, always replace the synchro sleeve and hub as a set.
- Support the bearing inner race, and push down on the mainshaft as shown.

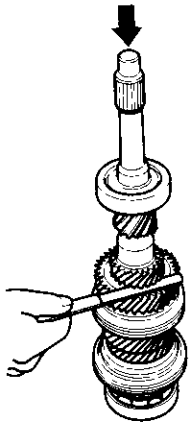

1. Measure the clearance between 3rd gear (A) and the ball bearing (B) with a feeler gauge.

   - If the clearance is more than the service limit, go to step 2.
   - If the clearance is within the service limit, go to step 4.

   **Standard: 0.06 – 0.19 mm (0.002 – 0.007 in.)**
   **Service Limit: 0.3 mm (0.012 in.)**

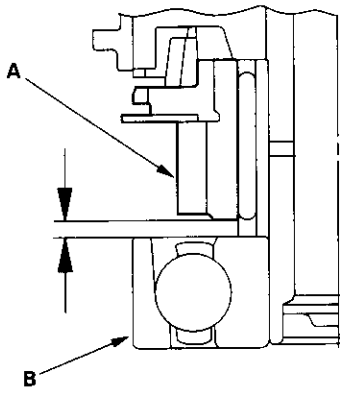


2. Measure the distance of the distance collar.

   - If distance is not within the standard, replace the distance collar with a new one.
   - If distance is within the standard, go to step 3.

   **Standard: 35.23 – 35.28 mm (1.387 – 1.389 in.)**

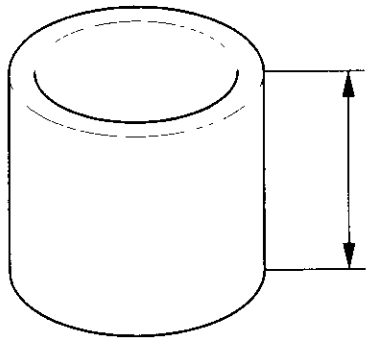

3. Measure the thickness of 3rd gear.

   - If the thickness of 3rd gear is less than the service limit, replace 3rd gear with a new one.
   - If the thickness of 3rd gear is within the service limit, replace the 3rd/4th synchro hub with a new one.

   **Standard: 35.09 – 35.17 mm (1.381 – 1.385 in.)**
   **Service Limit: 34.97 mm (1.377 in.)**

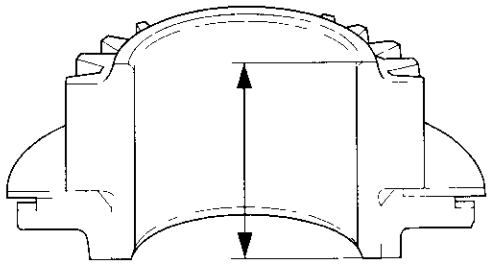

(cont'd)

## Mainshaft Assembly Clearance Inspection (cont'd)

4. Measure the clearance between 4th gear (A) and distance collar (B). If the clearance is more than the service limit, go to step 5.

   **Standard: 0.06–0.19 mm (0.002–0.007 in.)**
   **Service Limit: 0.3 mm (0.012 in.)**

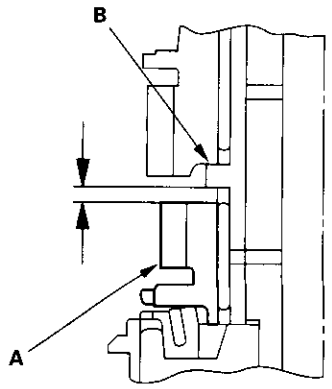


5. Measure distance ① on the distance collar.

   - If distance ① is not within the standard, replace the distance collar with a new one.
   - If distance ① is within the standard, go to step 6.

   **Standard: 32.03–32.08 mm (1.261–1.263 in.)**

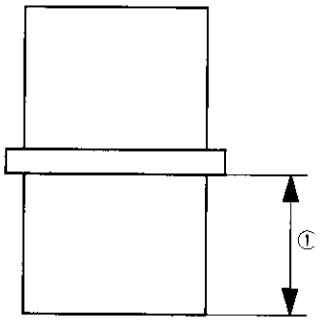


6. Measure the thickness of 4th gear.

   - If the thickness of 4th gear is less than service limit, replace 4th gear with a new one.
   - If the thickness of 4th gear is within the service limit, replace the 3rd/4th synchro hub with a new one.

   **Standard: 31.89–31.97 mm (1.256–1.259 in.)**
   **Service Limit: 31.77 mm (1.251 in.)**

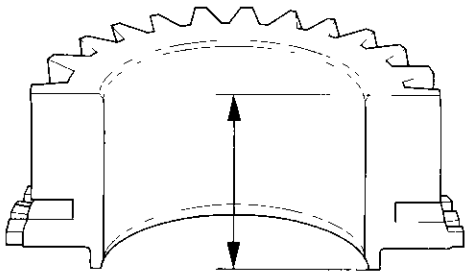

7. Measure the clearance between 5th gear (A) and the distance collar (B). If the clearance is more than the service limit, go to step 8.

   **Standard: 0.06–0.19 mm (0.002–0.007 in.)**
   **Service Limit: 0.3 mm (0.012 in.)**

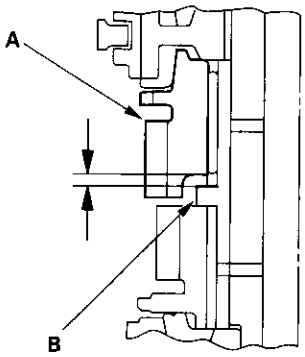

8. Measure distance ② on the distance collar.

   - If distance ② is not within the standard, replace the distance collar with a new one.
   - If distance ② is within the standard, go to step 9.

   **Standard: 32.03 – 32.08 mm (1.251 – 1.263 in.)**

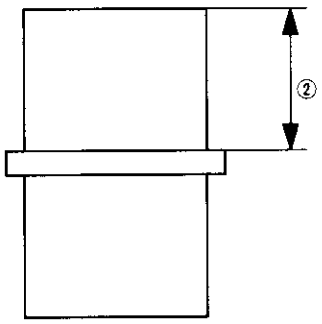


9. Measure the thickness of 5th gear.

   - If the thickness of 5th gear is less than the service limit, replace 5th gear with a new one.
   - If the thickness of 5th gear is within the service limit, replace the 5th/6th synchro hub with a new one.

   **Standard: 31.89 – 31.97 mm (1.256 – 1.259 in.)**
   **Service Limit: 31.77 mm (1.251 in.)**

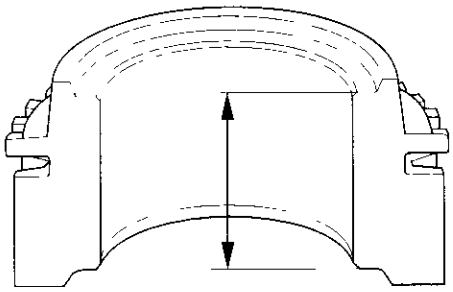

10. Measure the clearance between 6th gear (A) and the mainshaft (B). If the clearance is more than the service limit, go to step 11.

    **Standard: 0.06 – 0.19 mm (0.002 – 0.007 in.)**
    **Service Limit: 0.3 mm (0.012 in.)**

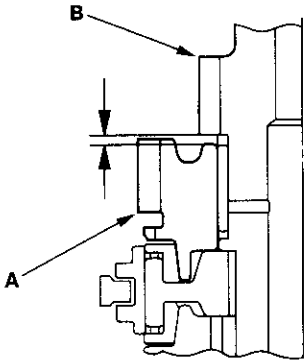


11. Measure the thickness of 6th gear.

    - If the thickness of 6th gear is less than the service limit, replace 6th gear with a new one.
    - If the thickness of 6th gear is within the service limit, replace the 5th/6th synchro hub with a new one.

    **Standard: 28.89 – 28.97 mm (1.137 – 1.141 in.)**
    **Service Limit: 28.77 mm (1.133 in.)**

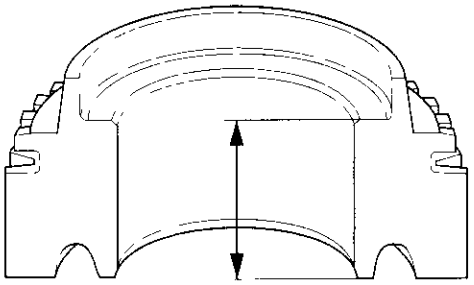

## Mainshaft Disassembly

1. Support ball bearing (A) with a commercially available bearing separator, and remove the ball bearing using a press as shown.

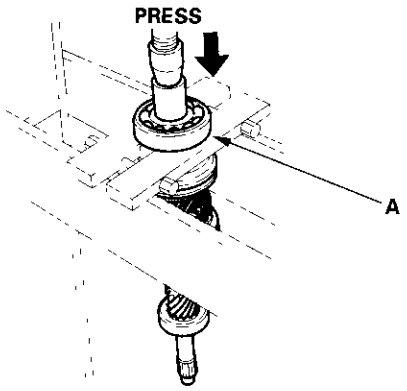


2. Remove the 3rd gear, 35 x 30 x 35 mm needle bearing, distance collar, double cone synchro, synchro spring, and 3rd/4th synchro sleeve.

3. Support 4th gear (A) with a commercially available bearing separator, and remove the 3rd/4th synchro hub (B), double cone synchro, and 4th gear using a press as shown.

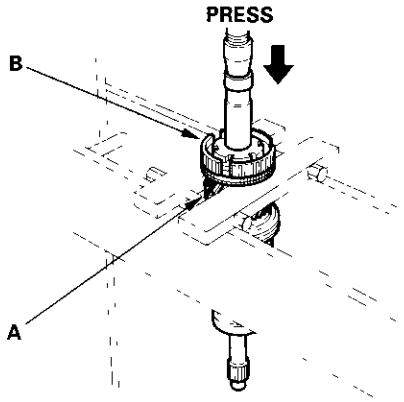


4. Remove the 42 x 47 x 30.5 mm needle bearing, distance collar, 5th gear, synchro ring, and synchro spring.

5. Support 6th gear (A) with a commercially available bearing separator, and remove the 5th/6th synchro hub/sleeve (B), synchro ring, synchro spring, and 6th gear using a press as shown.

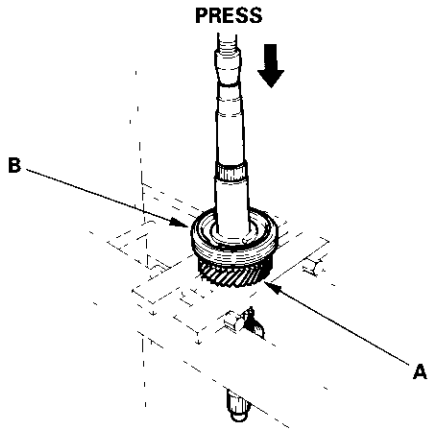


6. Remove the 39 x 44 x 26 mm needle bearing.

7. Support ball bearing (A) with a commercially available bearing separator, and remove the ball bearing using a press as shown.

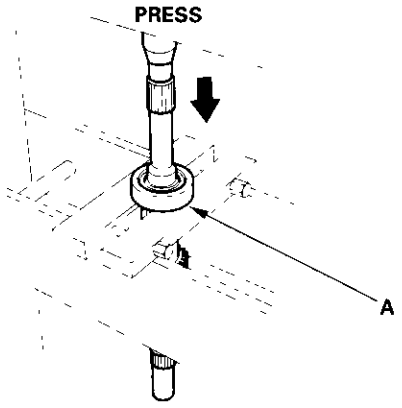

## Mainshaft Inspection

1. Inspect the gear surface and the bearing surface for wear and damage.

2. Measure the mainshaft at points A, B, C, and D. If any part of the mainshaft is less than the service limit, replace it with a new one.

   **Standard:**
   **A (Rear cover end ball bearing contact area):**
   **27.987 – 28.000 mm (1.1018 – 1.1024 in.)**
   **B (4th/5th gears contact area):**
   **34.987 – 35.000 mm (1.3774 – 1.3780 in.)**
   **C (6th gear contact area):**
   **38.984 – 39.000 mm (1.5348 – 1.5354 in.)**
   **D (Clutch housing end ball bearing contact area):**
   **28.002 – 28.015 mm (1.1024 – 1.1030 in.)**
   **Service Limit:**
   **A: 27.94 mm (1.100 in.)**
   **B: 34.94 mm (1.376 in.)**
   **C: 38.94 mm (1.533 in.)**
   **D: 27.95 mm (1.100 in.)**

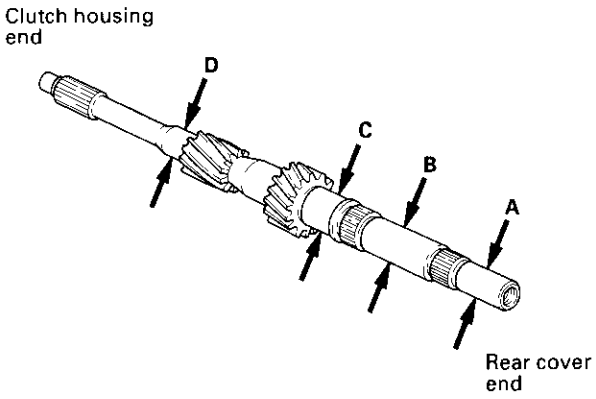


3. Inspect for runout by supporting both ends of mainshaft. Rotate the mainshaft two complete revolutions when measuring the runout. If the runout is more than the service limit, replace the mainshaft with a new one.

   **Standard: 0.02 mm (0.001 in.) max.**
   **Service Limit: 0.05 mm (0.002 in.)**

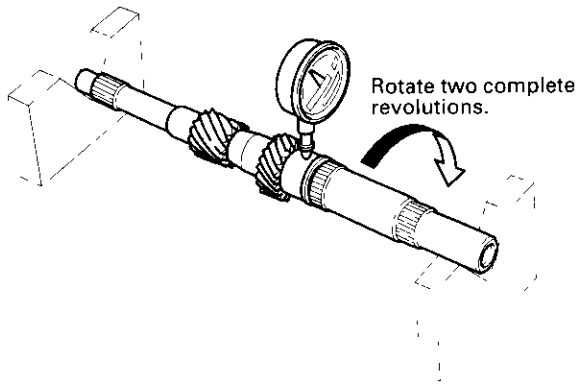

## Mainshaft Reassembly

### Exploded View

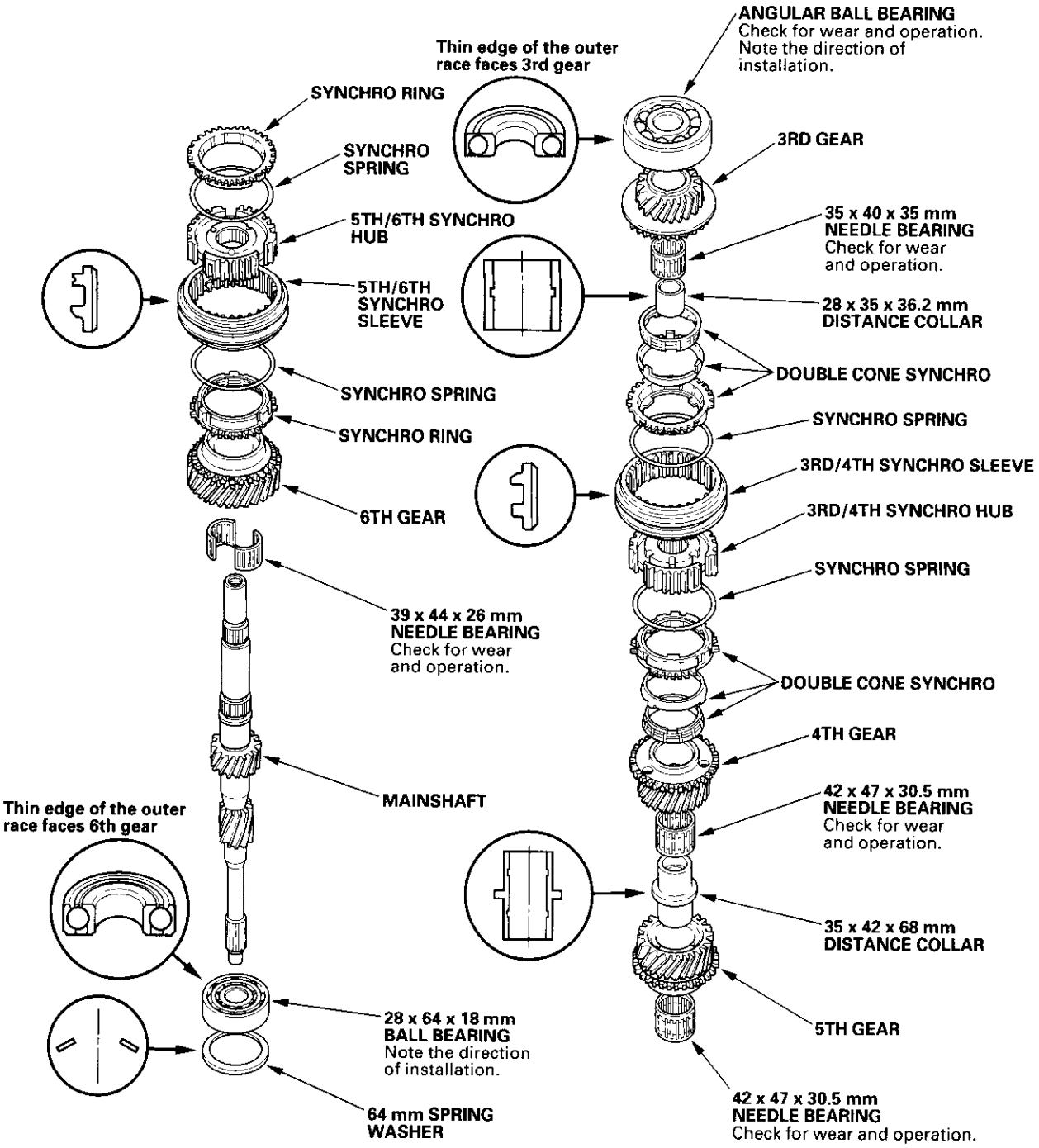

**Special Tools Required**
- Driver, 40 mm I.D. 07746-0030100
- Attachment, 30 mm I.D. 07746-0030300

NOTE: Refer to the Exploded View as needed during this procedure.

1. Support 2nd gear (A) on steel blocks, then install the ball bearing (B) using the special tools and a press as shown.

   NOTE: The thin edge of the outer race faces 6th gear.

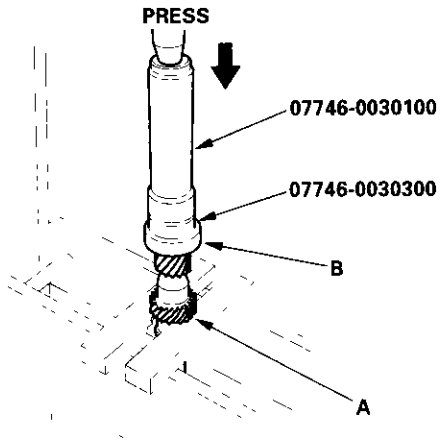


2. Install the 39 x 44 x 26 mm needle bearing, 6th gear, synchro ring, and synchro spring.

3. Install the 5th/6th synchro hub (A) and sleeve (B) by aligning the stops (C).

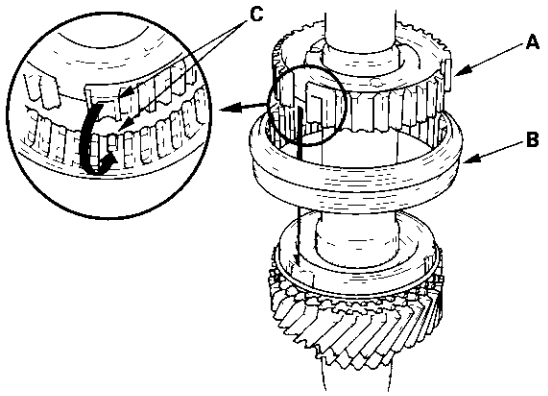


4. Press the 5th/6th synchro hub using the special tool as shown. After installing, check the operation of the 5th/6th synchro hub and sleeve.

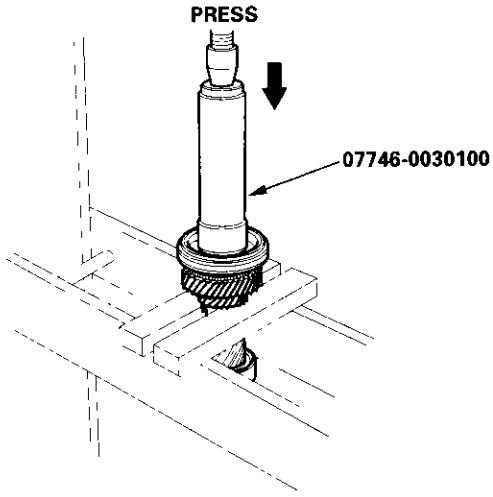


5. Install the synchro spring, synchro ring, 42 x 47 x 30.5 mm needle bearing, 5th gear, distance collar, and 4th gear.

6. Install the double cone synchro (A) and synchro spring (B) as shown.

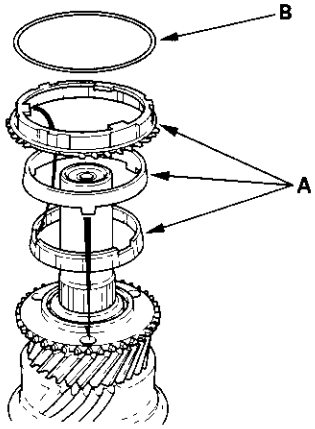


(cont'd)

## Mainshaft Reassembly (cont'd)

7. Install the 3rd/4th synchro hub (A) and sleeve (B) by aligning the stops (C).

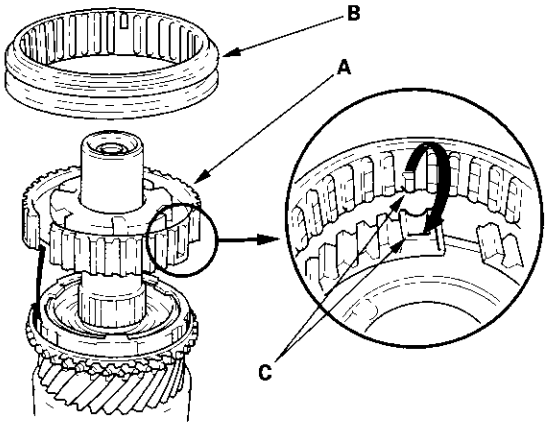


8. Press the 3rd/4th synchro hub using the special tool as shown. After installing, check the operation of the 3rd/4th synchro hub and sleeve.

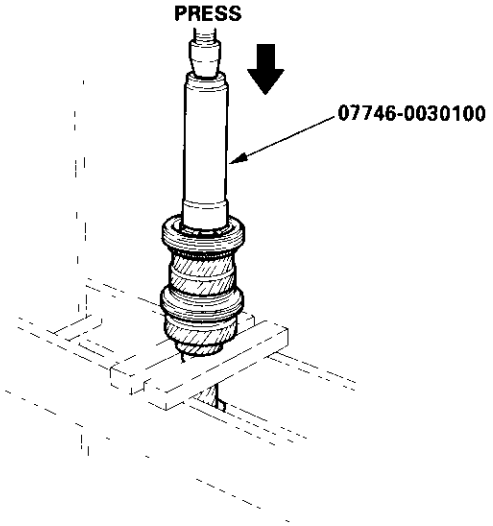


9. Install the double cone synchro (A) and synchro spring (B) as shown.

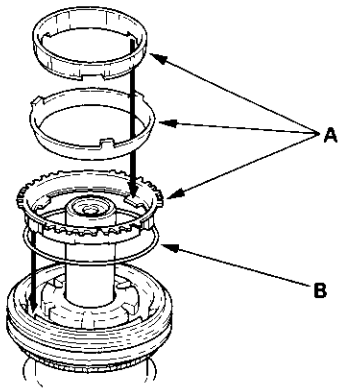


10. Install the distance collar (A), 35 x 40 x 35 mm needle bearing (B), and 3rd gear (C).

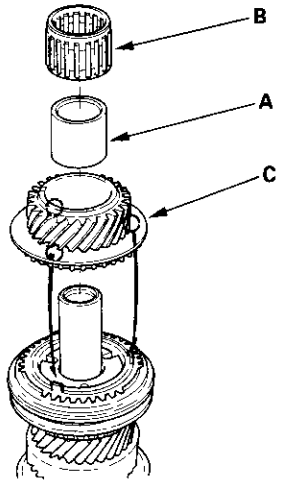

11. Install the angular ball bearing (A) with the thin edge of the outer race facing 3rd gear (B). Use the special tool and a press.

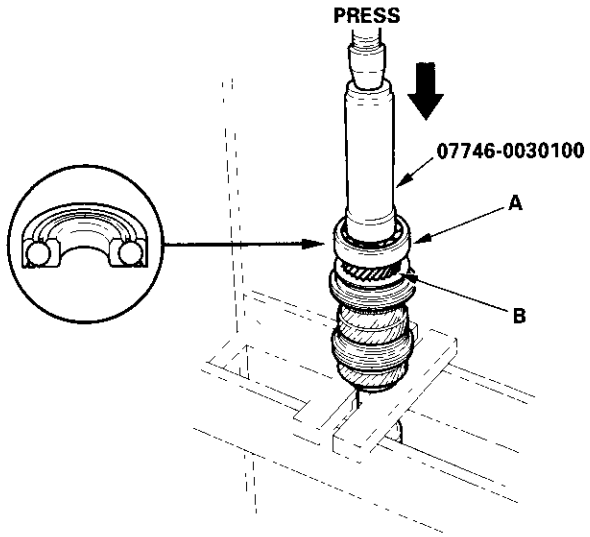


## Shift Arm Rod Assembly Disassembly/Reassembly

Refer to reassembling, clean all the parts in solvent, dry them, and apply lubricant to any contact parts.

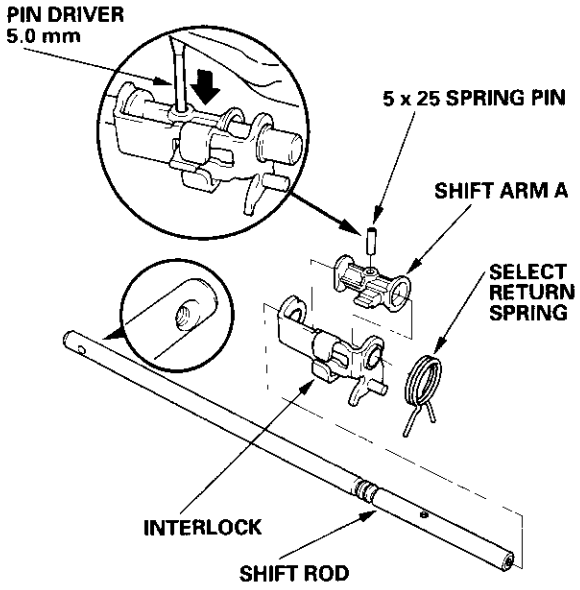

## Countershaft Assembly Clearance Inspection

NOTE: If replacement is required, always replace the synchro sleeve and hub as a set.

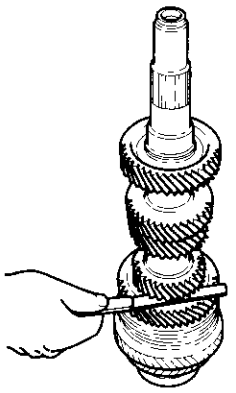

1. Measure the clearance between 2nd gear (A) and the countershaft (B) with a feeler gauge. If the clearance is more than the service limit, go to step 2.

   **Standard: 0.04–0.17 mm (0.002–0.007 in.)**
   **Service Limit: 0.3 mm (0.012 in.)**

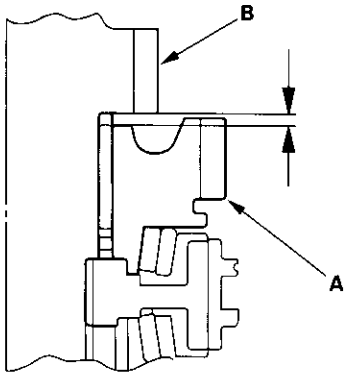


2. Measure the thickness of 2nd gear.

   - If the thickness of 2nd gear is less than the service limit, replace 2nd gear with a new one.
   - If the thickness of 2nd gear is within the service limit, replace the 1st/2nd synchro hub with a new one.

   **Standard: 32.88–32.96 mm (1.294–1.298 in.)**
   **Service Limit: 32.76 mm (1.290 in.)**

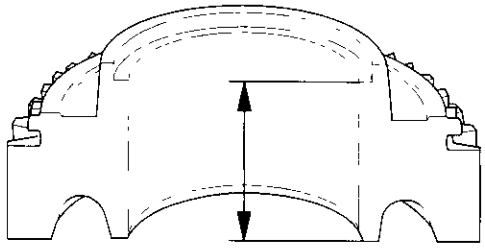

3. Measure the clearance between 1st gear (A) and the distance collar (B). If the clearance is more than the service limit, go to step 4.

   **Standard: 0.04–0.22 mm (0.002–0.009 in.)**
   **Service Limit: 0.3 mm (0.012 in.)**

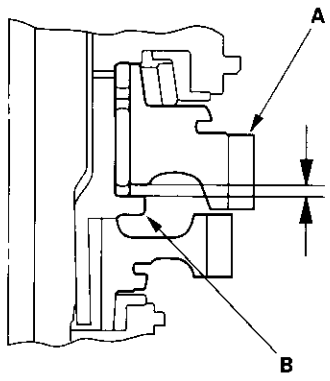

4. Measure distance ① on the distance collar.

   - If distance ① is not within the standard, replace the distance collar with a new one.
   - If distance ① is within the standard, go to step 5.

   **Standard: 28.03 – 28.08 mm (1.104 – 1.106 in.)**

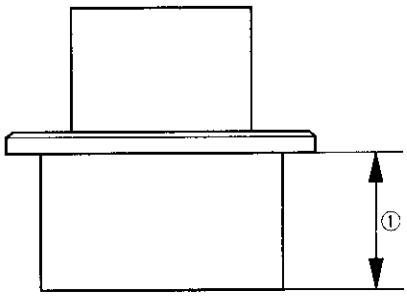


5. Measure the thickness of 1st gear.

   - If the thickness of 1st gear is less than the service limit, replace 1st gear with a new one.
   - If the thickness of 1st gear is within the service limit, replace the 1st/2nd synchro hub with a new one.

   **Standard: 31.18 – 31.26 mm (1.228 – 1.231 in.)**
   **Service Limit: 31.06 mm (1.223 in.)**

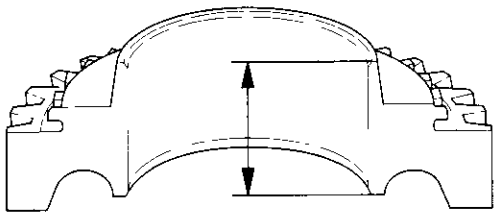

6. Measure the clearance between reverse gear (A) and the distance collar (B). If the clearance is more than the service limit, go to step 7.

   **Standard: 0.04 – 0.22 mm (0.002 – 0.009 in.)**
   **Service Limit: 0.3 mm (0.012 in.)**

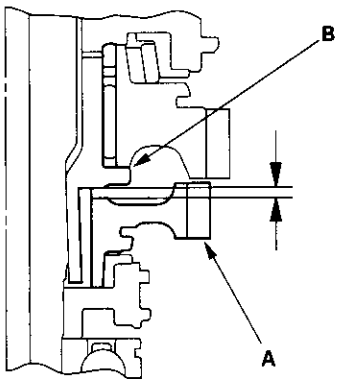


7. Measure distance ② on the distance collar.

   - If distance ② is not within the standard, replace the distance collar with a new one.
   - If distance ② is within the standard, go to step 8.

   **Standard: 25.53 – 25.58 mm (1.005 – 1.007 in.)**

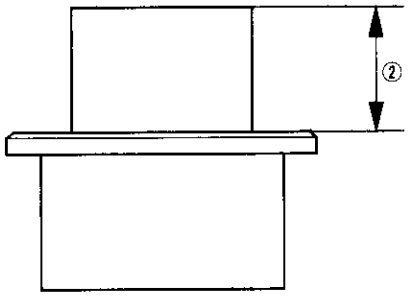


(cont'd)

## Countershaft Assembly Clearance Inspection (cont'd)

8. Measure the thickness of reverse gear.

   - If the thickness of reverse gear is less than the service limit, replace reverse gear with a new one.
   - If the thickness of reverse gear is within the service limit, replace the reverse synchro hub with a new one.

**Standard: 26.38–26.46 mm (1.039–1.042 in.)**
**Service Limit: 26.26 mm (1.034 in.)**

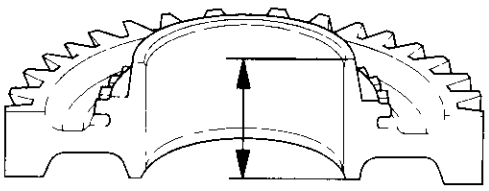

## Countershaft Disassembly

1. Remove the needle bearing.

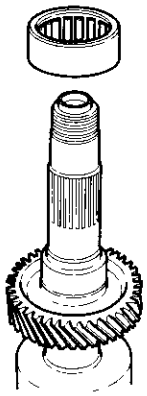

2. Remove the inner race (A) using a commercially available bearing separator and a press as shown.

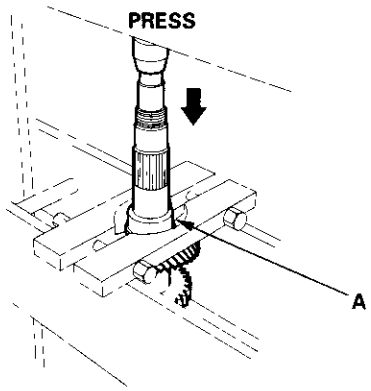

3. Raise the 27 mm locknut tab from the groove in the countershaft.

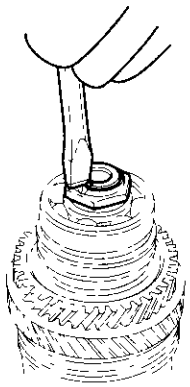

4. Securely clamp the 4th and 5th gears in a bench vise with wood blocks (A).

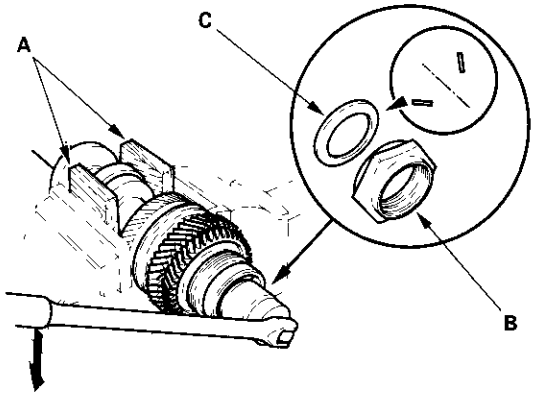


5. Remove the 27 mm locknut (B) and spring washer (C).

6. Remove the ball bearing using a press as shown.

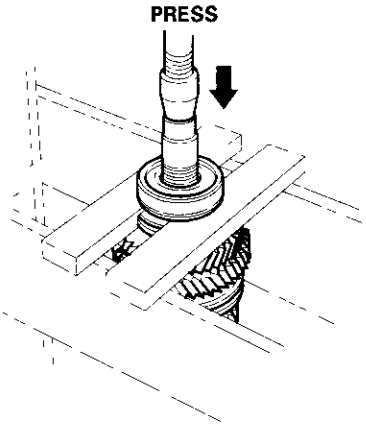


7. Remove the remaining parts from the countershaft.

## Countershaft Inspection

1. Inspect the gear surface and the bearing surface for wear and damage.

2. Measure the countershaft at points A, B, C, and D. If any part of the countershaft is less than the service limit, replace it with a new one.

   **Standard:**
   **A (Rear cover end needle bearing contact area):**
   **30.020 – 30.029 mm (1.1819 – 1.1822 in.)**
   **B (Transmission housing end needle bearing contact area):**
   **34.002 – 34.018 mm (1.3387 – 1.3393 in)**
   **C (2nd gear contact area):**
   **43.984 – 44.000 mm (1.7317 – 1.7323 in.)**
   **D (Clutch housing end ball bearing contact area):**
   **28.002 – 28.015 mm (1.1024 – 1.1030 in.)**
   **Service Limit:**
   **A: 29.97 mm (1.180 in.)**
   **B: 33.95 mm (1.337 in.)**
   **C: 43.93 mm (1.730 in.)**
   **D: 27.95 mm (1.100 in.)**

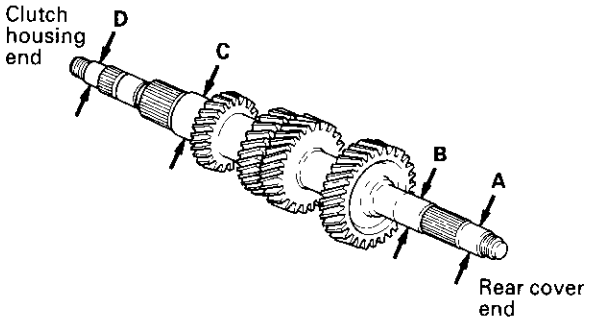


3. Inspect for runout by supporting both ends of countershaft. Rotate the countershaft two complete revolutions when measuring the runout. If the runout is more than the service limit, replace the countershaft with a new one.

   **Standard: 0.02 mm (0.001 in.) max.**
   **Service Limit: 0.05 mm (0.002 in.)**

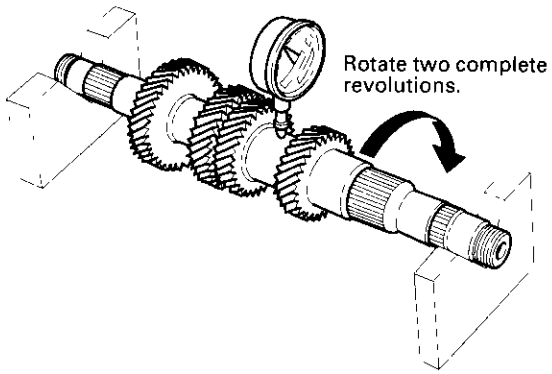

## Countershaft Reassembly

### Exploded View

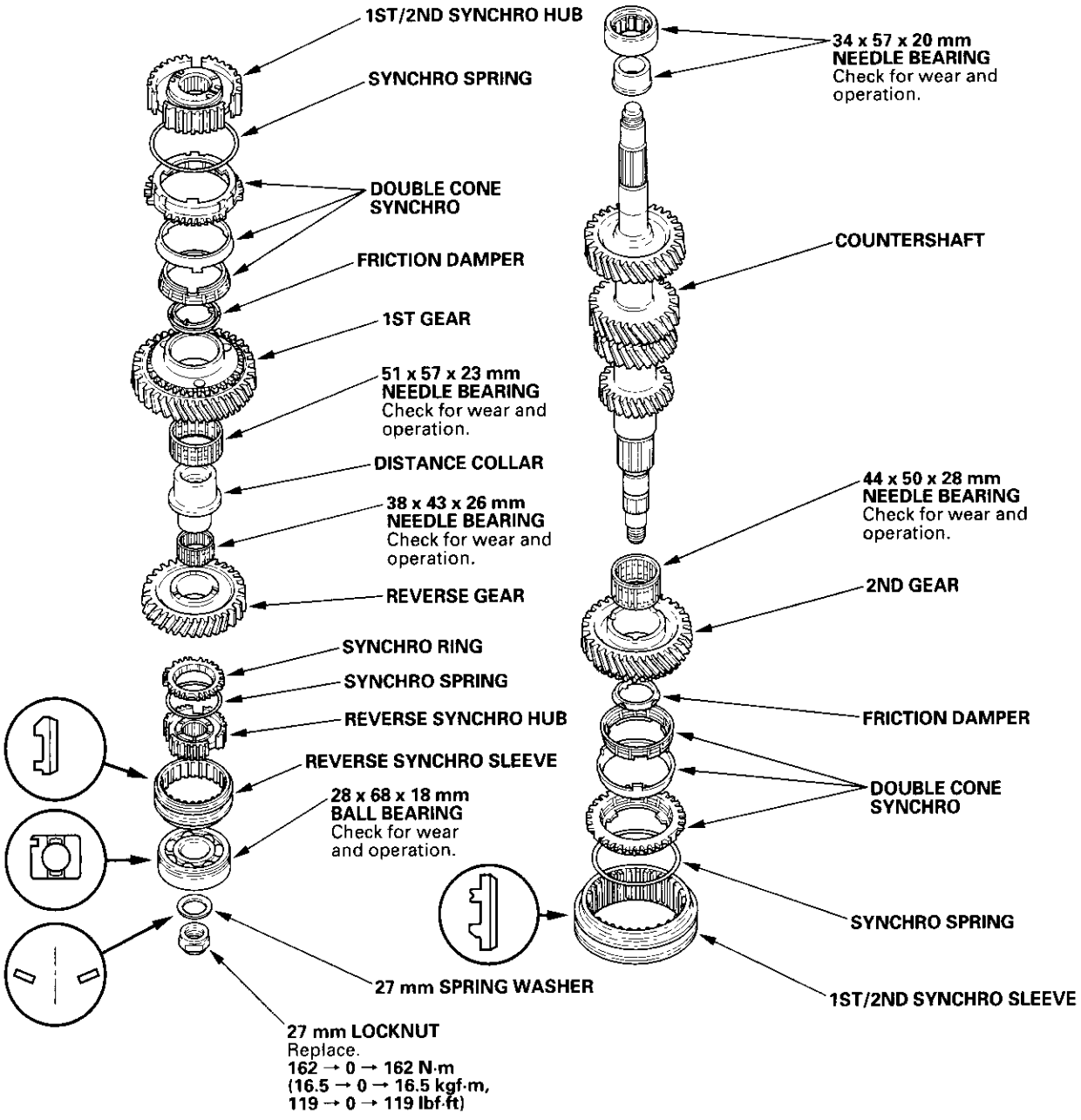


(cont'd)

## Countershaft Reassembly (cont'd)

**Special Tools Required**
- Driver, 40 mm I.D. 07746-0030100
- Attachment, 30 mm I.D. 07746-0030300
- Attachment, 35 mm I.D. 07746-0030400

NOTE: Refer to the Exploded View as needed during this procedure.

1. Install the 44 x 50 x 28 mm needle bearing and 2nd gear.

2. Install the friction damper (A), double cone synchro (B), and synchro spring (C) as shown.

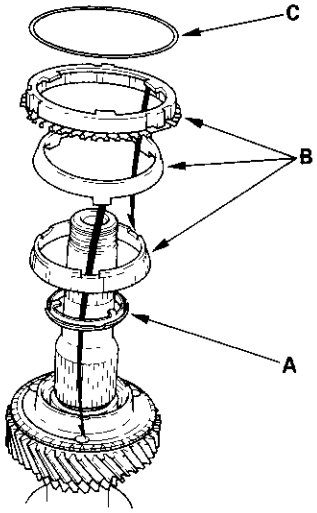


3. Install the 1st/2nd synchro hub (A) and sleeve (B) as shown.

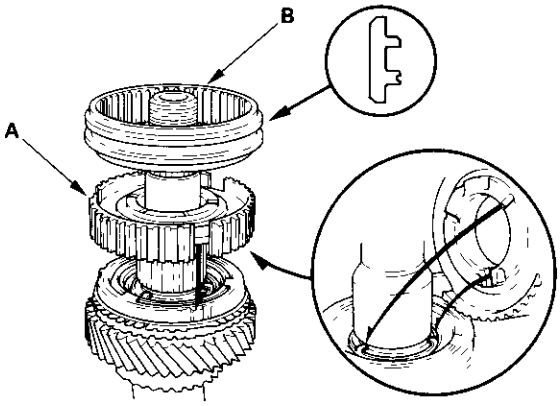


4. Install the synchro spring (A) and double cone synchro (B) as shown.

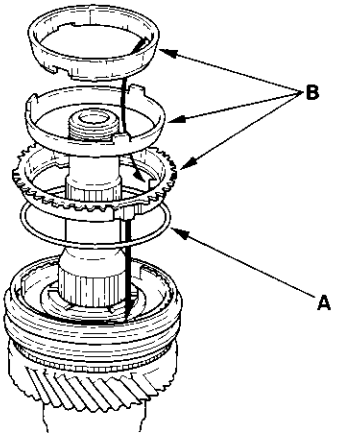


5. Install the friction damper on the 1st gear, then install the 1st gear by aligning the grooves as shown.

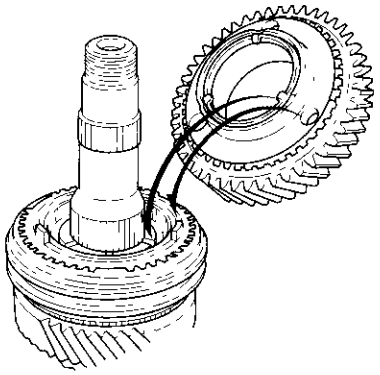

6. Install the 51 x 57 x 23 mm needle bearing, distance collar, and 38 x 43 x 26 mm needle bearing.

7. Install the reverse gear.

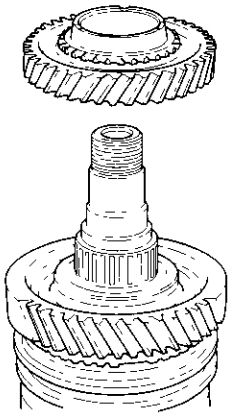

8. Install the synchro ring and synchro spring.

9. Install the reverse synchro hub (A) and sleeve (B).

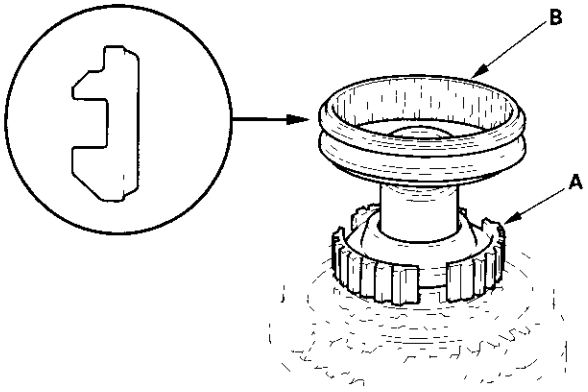


10. Install the ball bearing (A) using the special tools and a press as shown.

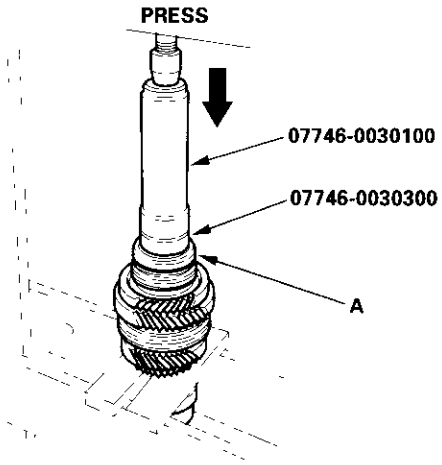


11. Securely clamp the 4th and 5th gears in a bench vise with wood blocks (A).

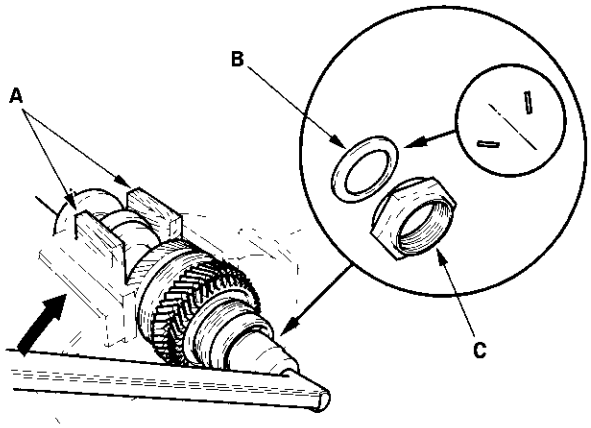


12. Install the spring washer (B) and 27 mm locknut (C).

13. Tighten the 27 mm locknut to the specified-value.

**Torque: 162 → 0 → 162 N·m**
**(16.5 → 0 → 16.5 kgf·m,**
**119 → 0 → 119 lbf·ft)**

(cont'd)

## Countershaft Reassembly (cont'd)

14. Stake the locknut tab into the groove.

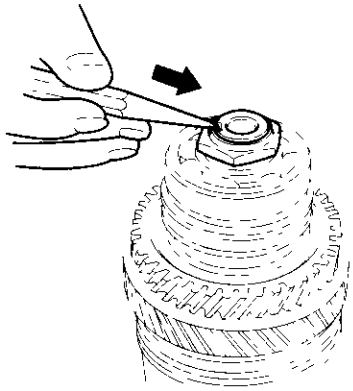

15. Install the needle bearing inner race (A) using the special tools and a press as shown.

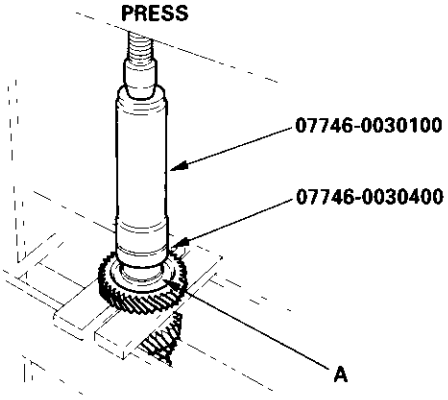


16. Install the needle bearing.

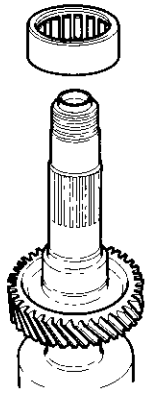

## Secondary Shaft Disassembly

1. Remove the tapered roller bearings using a commercially available bearing separator and a press as shown.

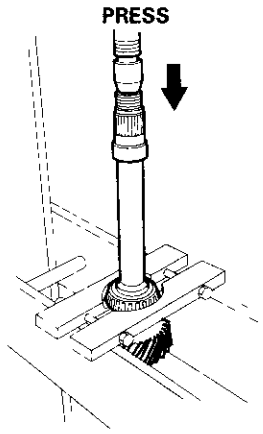


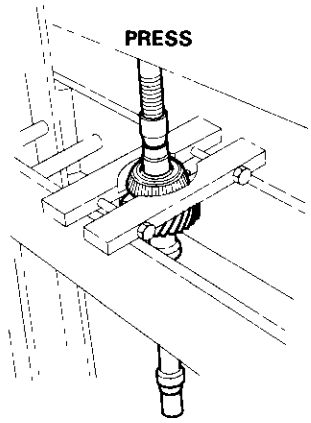


## Secondary Shaft Inspection

1. Inspect the gear surface and the bearing surface for wear and damage.

2. Measure the countershaft at points A, B, and C. If any part of the secondary shaft is less than the service limit, replace it with a new one.

**Standard:**

**A (Ball bearing contact area):**
**31.002 – 31.013 mm (1.2205 – 1.2210 in.)**

**B (Propeller shaft end tapered roller bearing contact area):**
**41.002 – 41.018 mm (1.6142 – 1.6149 in.)**

**C (Transmission end tapered roller bearing contact area):**
**35.009 – 35.025 mm (1.3783 – 1.3790 in.)**

**Service Limit:**

**A: 30.95 mm (1.219 in.)**
**B: 40.95 mm (1.612 in.)**
**C: 38.94 mm (1.376 in.)**

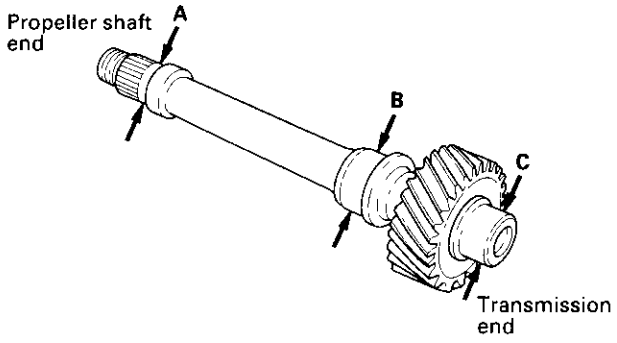


(cont'd)

## Secondary Shaft Inspection (cont'd)

3. Inspect for runout by supporting both ends of secondary shaft. Rotate the secondary shaft two complete revolutions when measuring the runout. If the runout is more than the service limit, replace the secondary shaft with a new one.

**Standard: 0.02 mm (0.001 in.) max.**
**Service Limit: 0.05 mm (0.002 in.)**

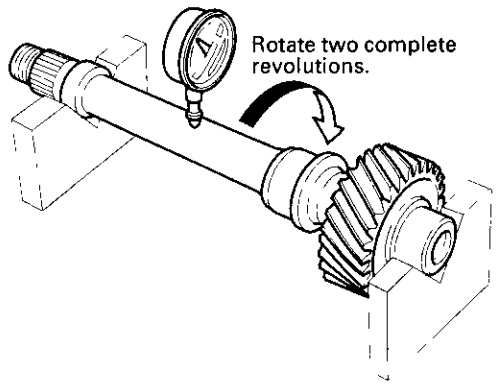


## Secondary Shaft Reassembly

**Special Tools Required**
- Attachment, 45 mm 07947-6890300
- Bearing attachment 07LAD-PW50601

1. Install the tapered roller bearings using the special tool and a press as shown.

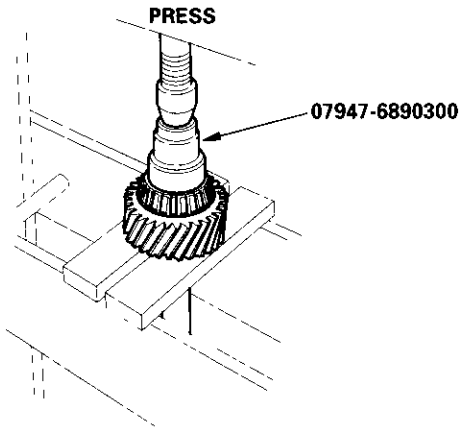


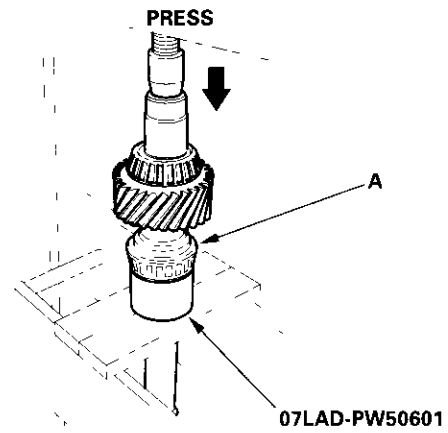

## Shift Forks Clearance Inspection

NOTE: If replacement is required, always replace the synchro sleeve and hub as a set.

1. Measure the clearance between the each shift fork (A) and its matching synchro sleeve (B). If the clearance exceeds the service limit, go to step 2.

**Standard: 0.35–0.65 mm (0.014–0.026 in.)**
**Service Limit: 1.00 mm (0.039 in.)**

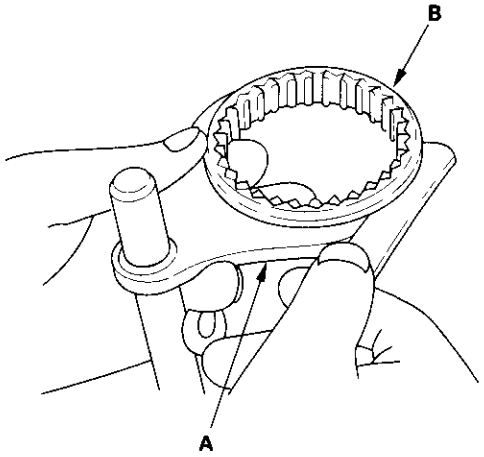


2. Measure the thickness of the shift fork fingers.

- If the thickness of the shift fork finger is less than the standard, replace the shift fork with a new one.
- If the thickness of the shift fork finger is within the standard, replace the synchro sleeve with a new one.

**Standard:**
**1-2 Shift Fork: 7.4–7.6 mm (0.29–0.30 in.)**
**3-4, 5-6, Reverse Shift Fork:**
**6.2–6.4 mm (0.24–0.25 in.)**

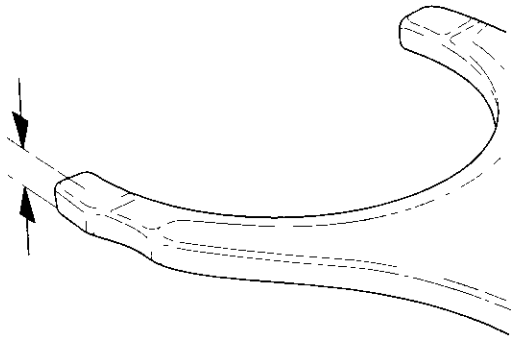

3. Measure the clearance between each shift fork, reverse shift piece and shift arm A. If the clearance exceeds the service limit, go to step 4.

**Standard: 0.2–0.6 mm (0.008–0.024 in.)**
**Service Limit: 0.7 mm (0.028 in.)**

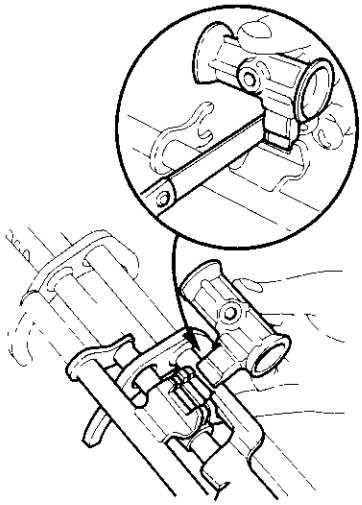

4. Measure the width of the shift arm A.

- If the width of the shift arm A is less than the service limit, replace the shift arm A with a new one.
- If the width of the shift arm A is within the service limit, replace the shift fork or the reverse shift piece with a new one.

**Standard: 16.8–17.0 mm (0.661–0.669 in.)**
**Service Limit: 16.7 mm (0.657 in.)**

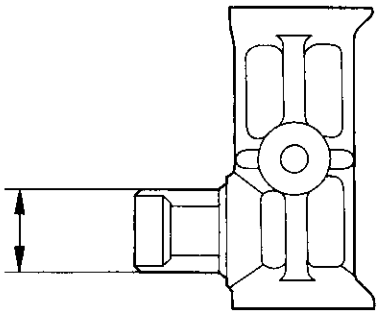

(cont'd)

## Shift Forks Clearance Inspection (cont'd)

5. Measure the clearance between the 1-2 shift lever and each shift fork and shift piece. If the clearance exceeds the service limit, go to step 6.

**Standard: 0 – 0.4 mm (0 – 0.016 in.)**
**Service Limit: 0.5 mm (0.020 in.)**

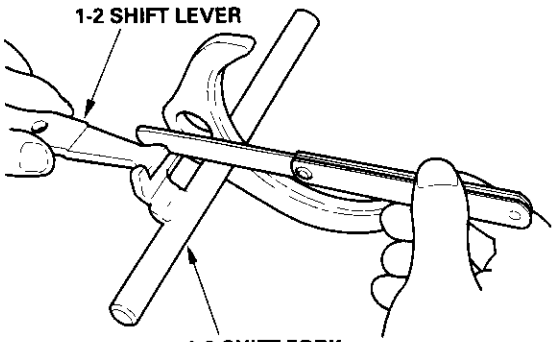


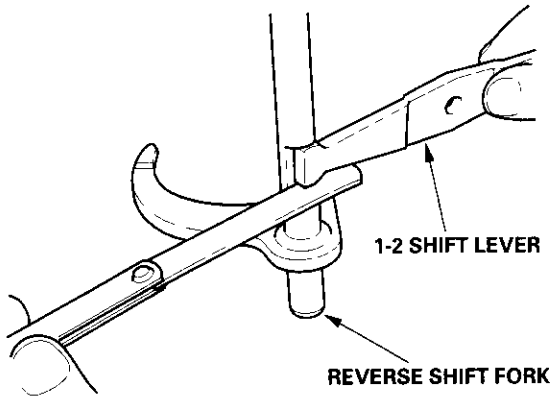


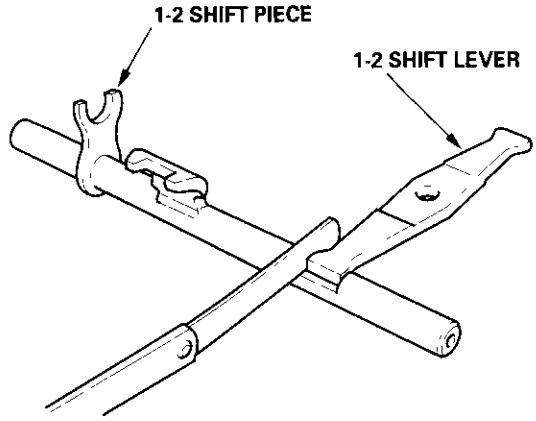


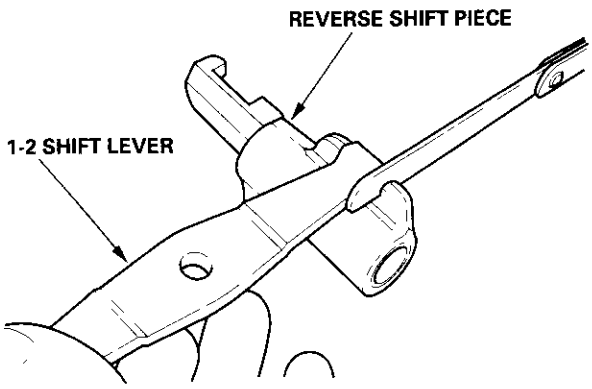


6. Measure the width of the 1-2 shift lever.

- If the width of the 1-2 shift lever is less than the service limit, replace the 1-2 shift lever with a new one.
- If the width of the 1-2 shift lever is within the service limit, replace the shift fork or shift piece with a new one.

**Standard: 17.0 – 17.2 mm (0.669 – 0.677 in.)**
**Service Limit: 16.9 mm (0.665 in.)**

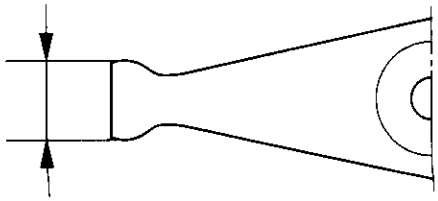

## Shift Forks Disassembly/Reassembly

Prior to reassembling, clean all the parts in solvent, dry them, and apply lubricant to any contact parts.

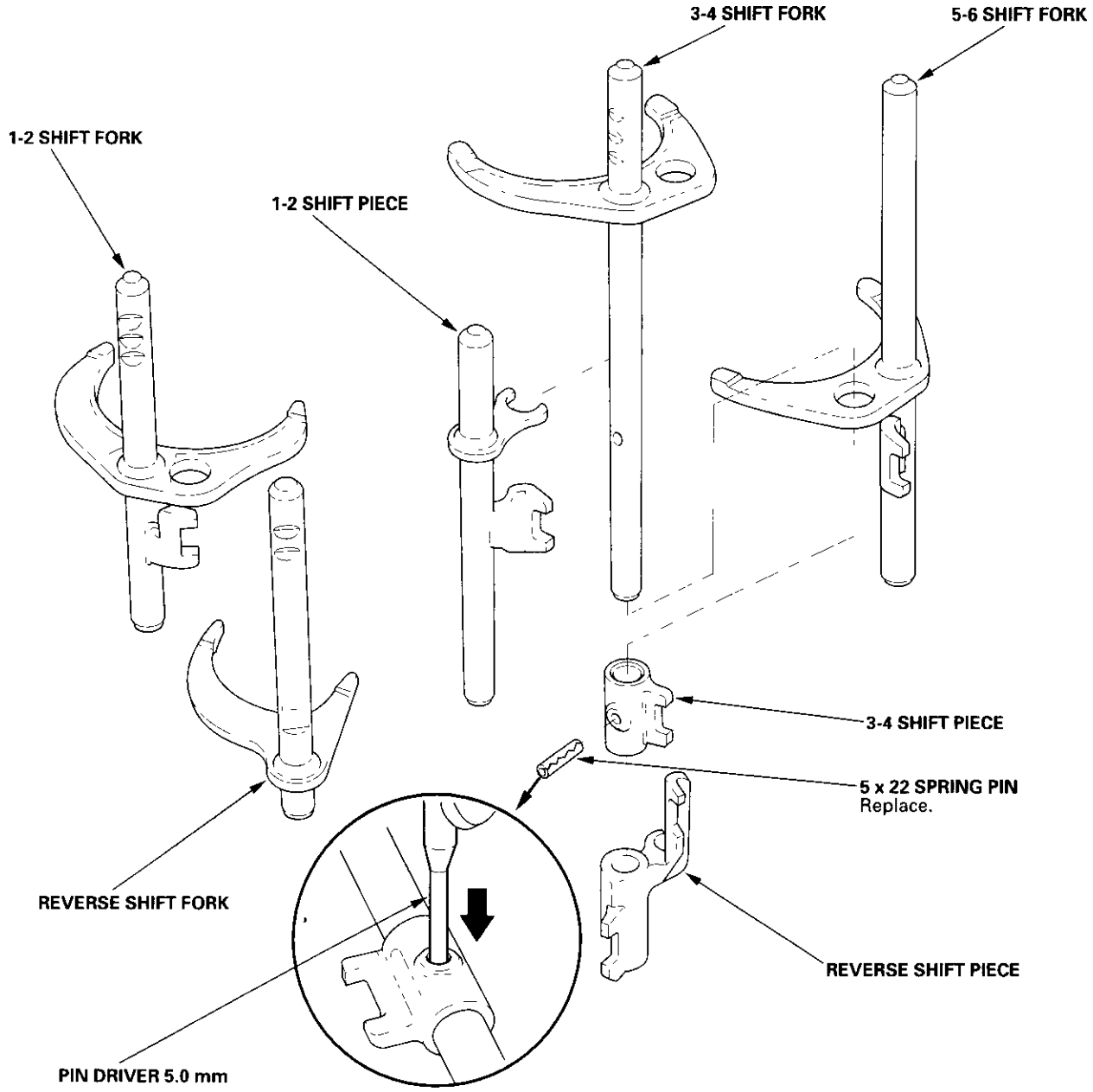

## Synchro Ring and Gear Inspection

1. Inspect the inside of the synchro ring (A) for wear.

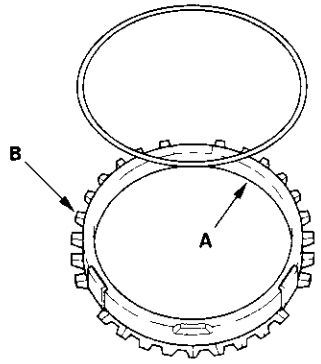


2. Inspect the synchro sleeve teeth and matching teeth on the synchro ring (B) for wear (rounded off).




3. Inspect the synchro sleeve teeth (C) and matching teeth on the gear for wear (rounded off).

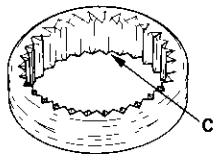


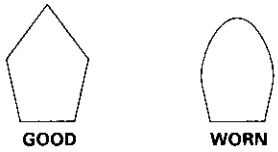


4. Inspect the gear hub thrust surface (A) for wear.

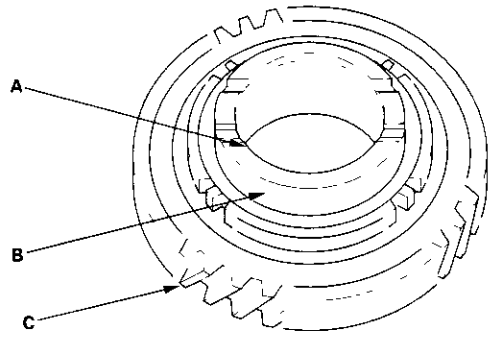


5. Inspect the cone surface (B) for wear and roughness.

6. Inspect the teeth on all gears (C) for uneven wear, scoring, galling, and cracks.

7. Coat the cone surface of the gear (B) with oil, and place the synchro ring on it. Rotate the synchro ring, making sure that it does not slip.

8. Measure the clearance between the synchro ring (A) and gear (B) all the way around. Hold the synchro ring against the gear evenly while measuring the clearance. If the clearance is less than the service limit, replace the synchro ring and synchro cone.

**Synchro Ring-to-Gear Clearance**
**Standard:**
**5th, 6th gear: 0.75 – 1.00 mm (0.030 – 0.039 in.)**
**Reverse gear: 0.85 – 1.10 mm (0.033 – 0.043 in.)**
**Service Limit: 0.4 mm (0.016 in.)**

**Double Cone Synchro-to-Gear Clearance**
**Standard:**

①: **Outer Synchro Ring to Synchro Cone**
**1st, 2nd, gear: 0.70 – 1.09 mm (0.028 – 0.043 in.)**
**3rd, 4th gear: 0.90 – 1.39 mm (0.035 – 0.055 in.)**

②: **Synchro Cone to Gear**
**1st, 3rd, 4th gear: 0.50 – 1.04 mm (0.020 – 0.041 in.)**
**2nd gear: 0.65 – 1.78 mm (0.026 – 0.070 in.)**

③: **Outer Synchro Ring to Gear**
**1st, 3rd, 4th gear: 0.95 – 1.68 mm (0.037 0.066 in.)**
**2nd gear: 0.70 – 1.82 mm (0.028 – 0.072 in.)**

**Service Limit:**
①: **0.3 mm (0.012 in.)**
②: **0.3 mm (0.012 in.)**
③: **0.6 mm (0.024 in.)**

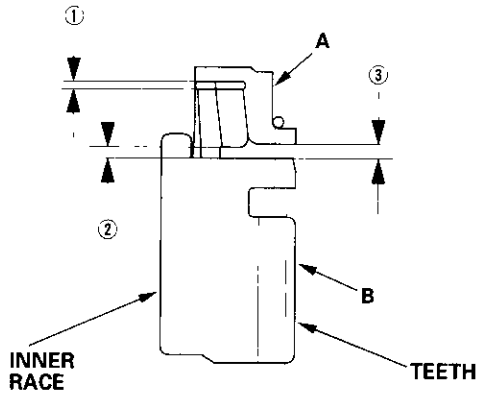


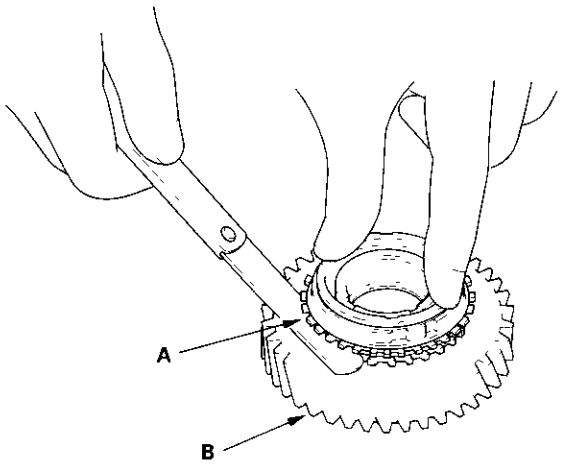


## Synchro Sleeve and Hub Inspection and Reassembly

1. Inspect gear teeth on all synchro hubs and synchro sleeves for rounded off corners, which indicate wear.

2. Install each synchro hub (A) in its mating synchro sleeve (B), and check for freedom of movement. Be sure to match the three sets of longer teeth (C) (120 degrees apart) on the synchro sleeve with the three sets of deeper grooves (D) in the synchro hub. Do not install the synchro sleeve with its longer teeth in the 1st/2nd synchro hub slots (E) because it will damage the spring ring.

   NOTE: If replacement is required, always replace the synchro sleeve and synchro hub as a set.

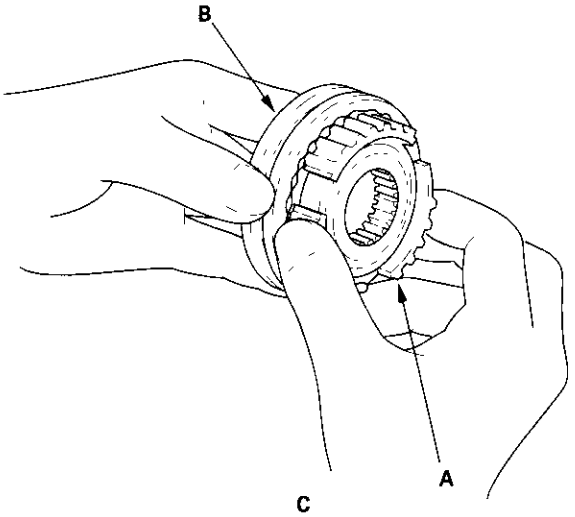


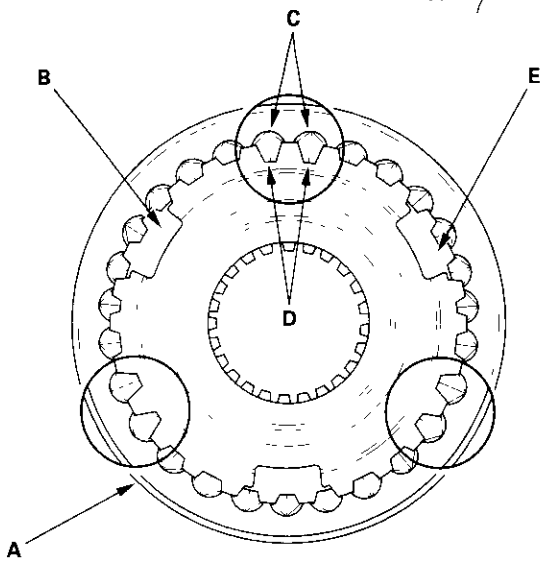

## Oil Pump Clearance Inspection

1. Measure the radial clearance between the inner rotor (A) and the outer rotor (B). If the clearance exceeds the service limit, replace the pump rotor.

   **Inner Rotor-to-Outer Radial Clearance**
   **Standard: 0.14 mm (0.006 in.) max**
   **Service Limit: 0.20 mm (0.008 in.)**

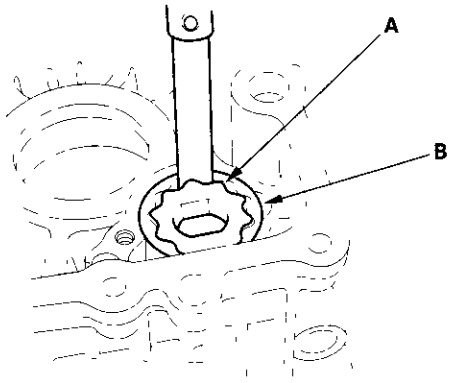


2. Measure the radial clearance between the outor rotor (B) and the transmission housing (C). If the clearance exceeds the service limit, replace the pump rotor.

   **Rotor-to-Transmission Housing Radial Clearance**
   **Standard: 0.1—0.2 mm (0.004—0.008 in.)**
   **Service Limit: 0.22 mm (0.009 in.)**

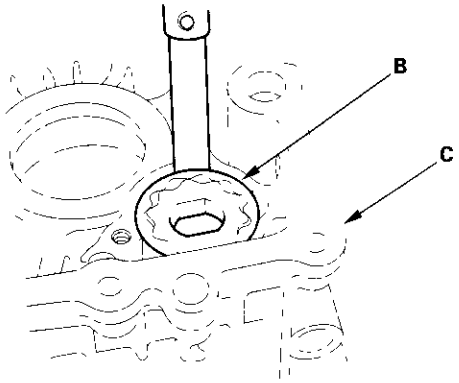


3. Measure the axial clearance on the pump rotor. If the clearance exceeds the standard, select the appropriate rotor for the correct clearance from the chart below.

   **Rotor-to-Transmission Housing Axial Clearance**
   **Standard: 0.03—0.07 mm (0.001—0.003 in.)**

   **Outer and Inner Rotor Set**

| | Part Number | Thickness |
|---|---|---|
| A | 21168-PCY-0000 | 9.95—9.97 mm (0.392—0.393 in.) |
| B | 21169-PCY-0000 | 9.93—9.95 mm (0.391—0.392 in.) |
| C | 21170-PCY-0000 | 9.91—9.93 mm (0.390—0.391 in.) |

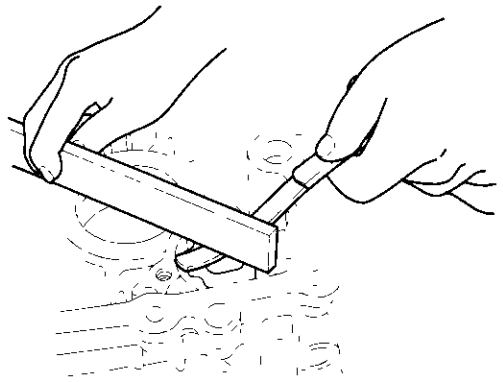

## Secondary Shaft Preload Adjustment

1. Install the oil guide plate S, shim (A) and the bearing outer race (B) on the transmission housing (see step 16 on page 13-58).

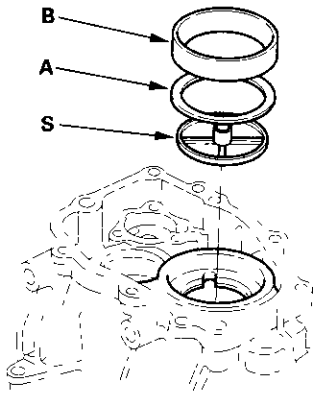


2. Install the rear cover, then tighten the 8 mm flange bolts in a crisscross pattern in several steps.

**8 x 1.25 mm**
**27 N·m (2.8 kgf·m, 20 lbf·ft)**

3. Rotate the secondary shaft in both directions to seat the tapered roller bearing.

4. Measure the turning torque of the secondary shaft by rotating it in both directions with a torque wrench.

**Standard: 1.86 – 2.84 N·m (19 – 29 kgf·cm, 16.5 – 25.2 lbf·in)**

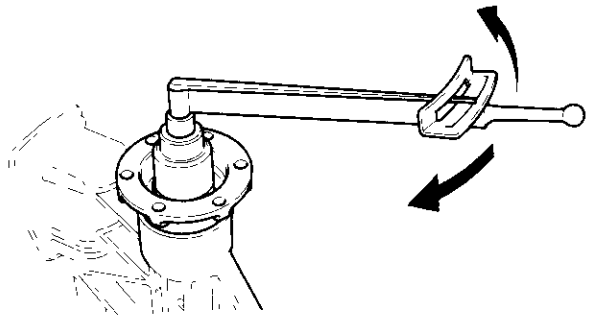

5. If the preload is not within the standard, select a shim that will provide correct preload.

**Shim**

| | Part Number | Thickness |
|---|---|---|
| A | 41381-PCY-0000 | 0.90 mm (0.0354 in.) |
| B | 41382-PCY-0000 | 0.93 mm (0.0366 in.) |
| C | 41383-PCY-0000 | 0.96 mm (0.0378 in.) |
| D | 41384-PCY-0000 | 0.99 mm (0.0390 in.) |
| E | 41385-PCY-0000 | 1.02 mm (0.0402 in.) |
| F | 41386-PCY-0000 | 1.05 mm (0.0413 in.) |
| G | 41387-PCY-0000 | 1.08 mm (0.0425 in.) |
| H | 41388-PCY-0000 | 1.11 mm (0.0437 in.) |
| I | 41389-PCY-0000 | 1.14 mm (0.0449 in.) |
| J | 41390-PCY-0000 | 1.17 mm (0.0461 in.) |
| K | 41391-PCY-0000 | 1.20 mm (0.0472 in.) |
| L | 41392-PCY-0000 | 1.23 mm (0.0484 in.) |
| M | 41393-PCY-0000 | 1.26 mm (0.0496 in.) |
| N | 41394-PCY-0000 | 1.29 mm (0.0508 in.) |
| O | 41395-PCY-0000 | 1.32 mm (0.0520 in.) |
| P | 41396-PCY-0000 | 1.35 mm (0.0531 in.) |
| Q | 41397-PCY-0000 | 1.38 mm (0.0543 in.) |
| R | 41398-PCY-0000 | 1.41 mm (0.0555 in.) |
| S | 41399-PCY-0000 | 1.44 mm (0.0567 in.) |
| T | 41400-PCY-0000 | 1.47 mm (0.0579 in.) |

## Mainshaft Thrust Clearance Adjustment

**Special Tools Required**
- Mainshaft holder 07GAJ-PG20110
- Mainshaft base 07GAJ-PG20130

1. Install the mainshaft assembly in the clutch housing.
2. Install the oil guide plate M and 82 mm shim(s) (A) into the transmission housing.

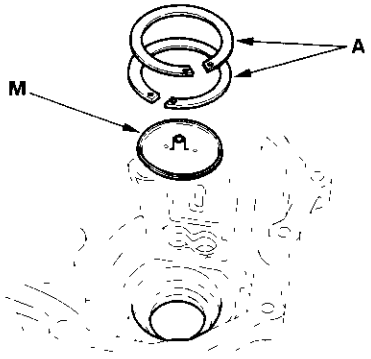


3. Install the transmission housing onto the clutch housing, then tighten the 8 mm flange bolts in a crisscross pattern in several steps.

   **8 x 1.25 mm**
   **27 N·m (2.8 kgf·m, 20 lbf·ft)**

4. Attach the special tool to the mainshaft as follows:
   - Back-out the mainshaft holder bolt (A) and loosen the two hex bolts (B).
   - Fit the holder over the mainshaft so its lip is towards the transmission.
   - Align the mainshaft holder's lip around the groove at the inside of the mainshaft splines, then tighten the hex bolts.

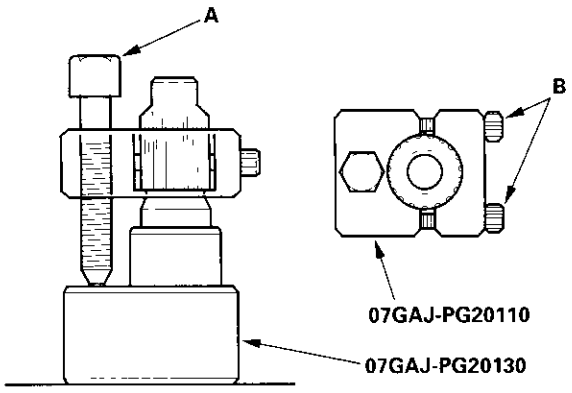


5. Seat the mainshaft fully by tapping its end with a plastic hammer.
6. Thread the mainshaft holder bolt in until it just contacts the wide surface of the mainshaft base.
7. Zero a dial gauge (A) on the end of the mainshaft.

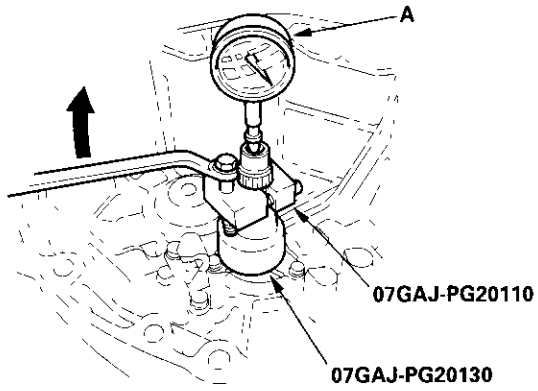


8. Turn the mainshaft holder bolt clockwise; stop turning when the dial gauge has reached its maximum movement. The reading on the dial gauge is the amount of mainshaft end play.

   NOTE: Do not turn the mainshaft holder bolt more than 60 degrees after the needle of the dial gauge stops moving may damage the transmission.

9. If the reading is within the standard, the clearance is correct. If the reading is not within the standard, recheck the shim thickness.

   **Standard: 0.14 – 0.21 mm (0.006 – 0.008 in.)**

**82 mm Shim**

| | Parts Number | Thickness |
|---|---|---|
| A | 23931-PR8-F000 | 0.60 mm (0.0236 in.) |
| B | 23932-PR8-F000 | 0.63 mm (0.0248 in.) |
| C | 23933-PR8-F000 | 0.66 mm (0.0260 in.) |
| D | 23934-PR8-F000 | 0.69 mm (0.0271 in.) |
| E | 23935-PR8-F000 | 0.72 mm (0.0283 in.) |
| F | 23936-PR8-F000 | 0.75 mm (0.0295 in.) |
| G | 23937-PR8-F000 | 0.78 mm (0.0307 in.) |
| H | 23938-PR8-F000 | 0.81 mm (0.0319 in.) |
| I | 23939-PR8-F000 | 0.84 mm (0.0331 in.) |
| J | 23940-PR8-F000 | 0.87 mm (0.0343 in.) |
| K | 23941-PR8-F000 | 0.90 mm (0.0354 in.) |
| L | 23942-PR8-F000 | 0.93 mm (0.0366 in.) |
| M | 23943-PR8-F000 | 0.96 mm (0.0378 in.) |
| N | 23944-PR8-F000 | 0.99 mm (0.0390 in.) |
| O | 23945-PR8-F000 | 1.02 mm (0.0402 in.) |
| P | 23946-PR8-F000 | 1.05 mm (0.0413 in.) |
| Q | 23947-PR8-F000 | 1.08 mm (0.0425 in.) |
| R | 23948-PR8-F000 | 1.11 mm (0.0437 in.) |
| S | 23949-PR8-F000 | 1.14 mm (0.0449 in.) |
| T | 23950-PR8-F000 | 1.17 mm (0.0461 in.) |
| U | 23951-PR8-F000 | 1.20 mm (0.0472 in.) |

# Transmission Reassembly

**Special Tools Required**
- Driver 07749-0010000
- Attachment, 42 x 47 mm 07746-0010300
- Attachment, 62 x 68 mm 07746-0010500
- Driver, 30 mm I.D. 07946-MB00000
- Attachment, 35 mm I.D. 07965-SA50500
- Mainshaft holder 07PAB-001A300
- Attachment, 72 x 75 mm 07746-0010600
- Attachment, 40 x 50 mm I.D. 07LAD-PW50601
- Driver, 40 mm I.D. 07746-0030100
- Flange holder 07RAB-TB4010B
- Holder handle, 07JAB-001020A

## Transmission Housing Installation

NOTE: Prior to reassembling, clean all the parts in solvent, dry them, and apply lubricate to any contact surfaces.

1. Install the oil seal (A) using the special tools.

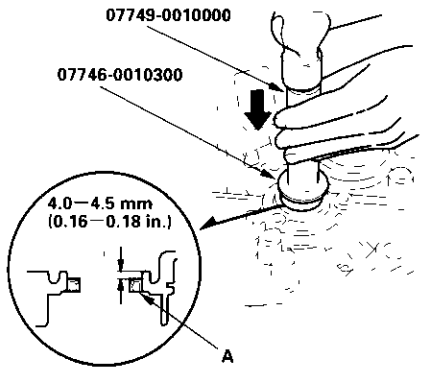


2. Install the release bearing guide (A), the clutch release hanger (B), release hanger spring (C), and the breather plate (D).

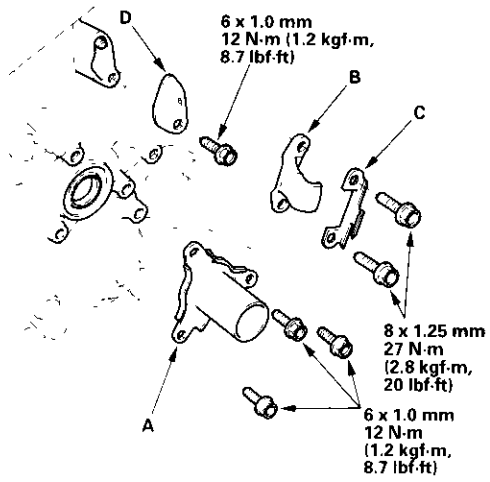


(cont'd)

## Transmission Reassembly (cont'd)

3. Install the thrust washer (A) and 64 mm spring washer (B).

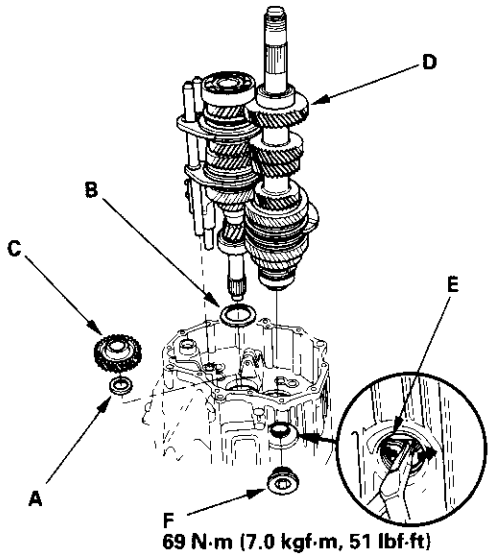


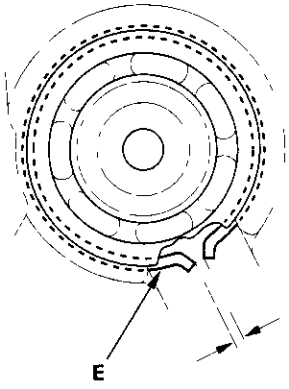


4. Install the reverse idler gear (C), mainshaft, countershaft, and shift fork assemblies (D) with the snap ring pliers, and set the 68 mm snap ring (E) into the groove of the countershaft bearing.

   NOTE: Check that the snap ring is securely seated in the groove of the countershaft bearing.

   **Standard: 0 – 6.93 mm (0 – 0.273 in.)**

5. Apply liquid gasket (P/N 08718-0001) to the threads of the 34 mm sealing bolt (F), then install the 34 mm sealing bolt.

6. Install the 1-2 shift piece.

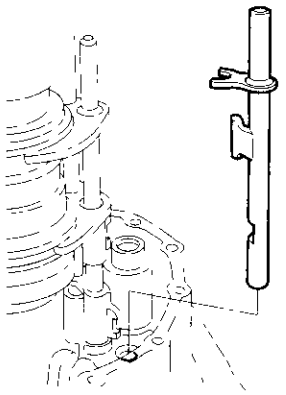

7. Install the select return spring (A) and the 8×40 pin (B) onto the transmission, then install the interlock (C).

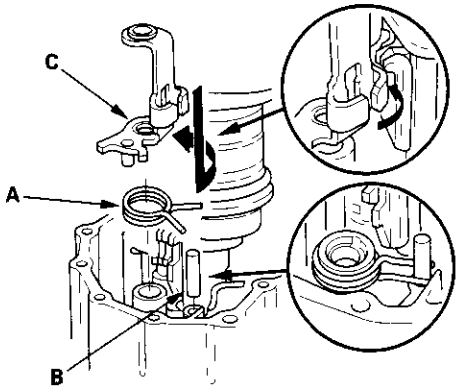


8. Install the shift arm A by aligning the interlock finger and the shift fork grooves.

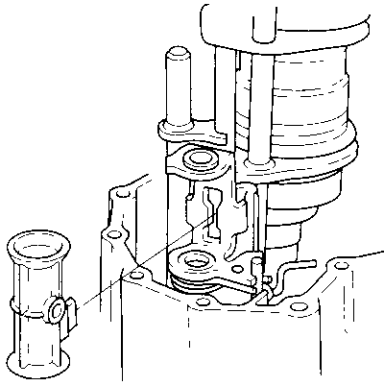

9. Install the shift rod (A) into the interlock assembly (B) with it recessed hole (C) toward the top of the transmission (D), then install the 5×25 spring pin (E).

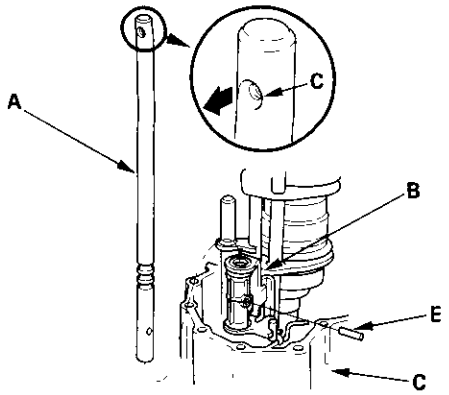


10. Install the outer side 1-2 shift lever (A) first, then install the inner side 1-2 shift lever (B).

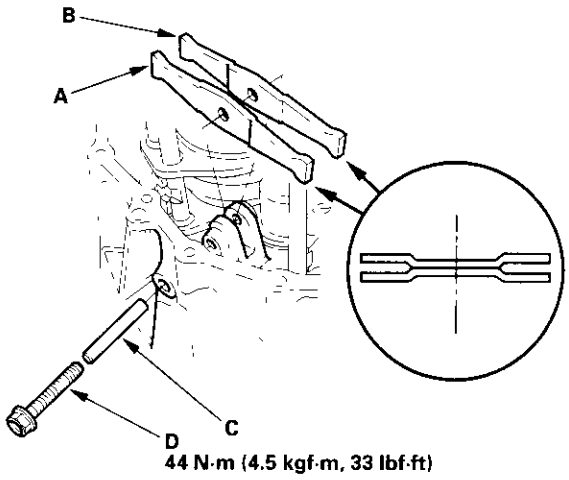


11. Install the 8 x 63 pin (C), then tighten the 10 mm flange bolt (D).

12. Install the needle bearing (A), reverse gear shaft (B), thrust washer (C), and reverse shaft holder (D), then install the washer and 8 mm flange bolt.

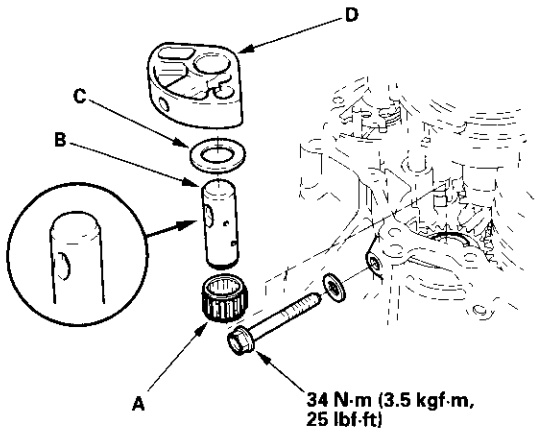


13. Install the oil guide tube (A) and magnet (B).

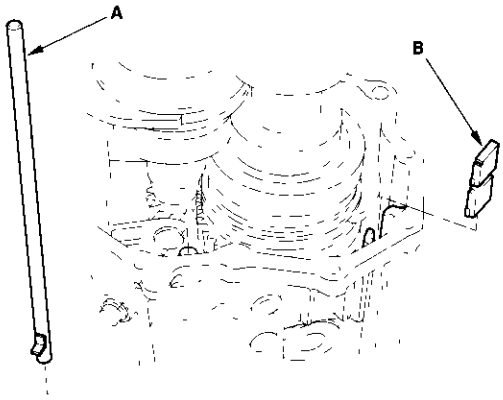


14. Install the oil guide plate M and 82 mm shim(s) (A).

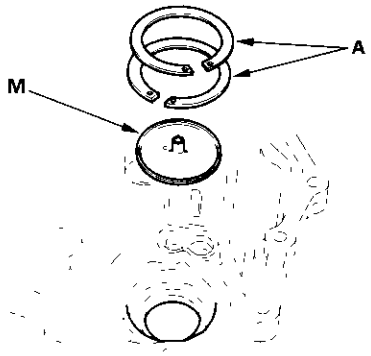


(cont'd)

## Transmission Reassembly (cont'd)

15. Install the oil pump strainer (A), suction guide (B), and circlip (C).

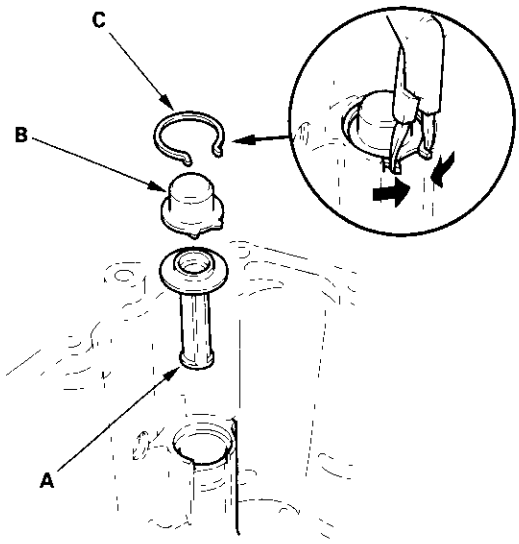


16. Install the 16 x 26 x 7 mm oil seal (A) as shown.

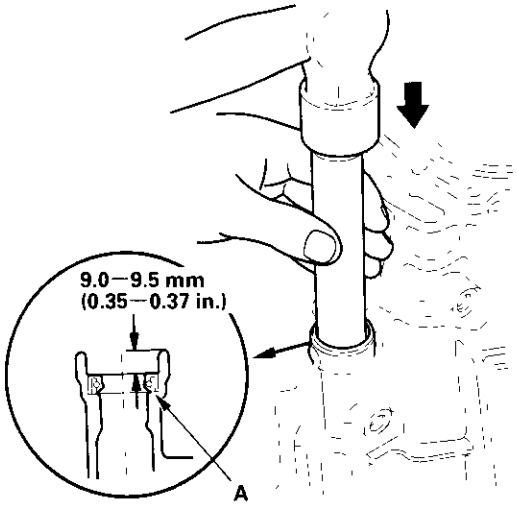


17. Install the oil guide plate S and shim (A), then install the bearing outer race (B) using the special tools as shown.

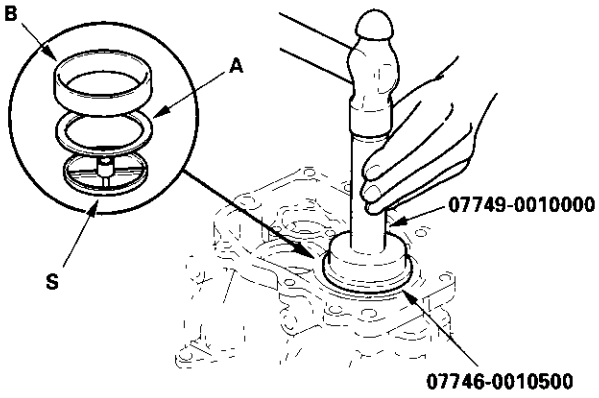


18. Remove the dirty oil from the transmission housing sealing surface. Apply liquid gasket (P/N 08718-0001) to the sealing surface. Be sure to seal the entire circumference of the bolt holes to prevent oil leakage.

NOTE:
- If 5 minutes have passed after applying liquid gasket, reapply it and assemble the housings.
- Allow it to cure at least 20 minutes after assembly before filling the transmission with oil.

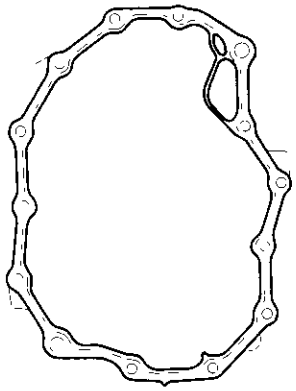

— — **Liquid gasket**

19. Install the 14 x 20 dowel pins (A), transmission housing (B), 8 mm flange bolts, transmission hanger (C), and transmission hanger A (D).

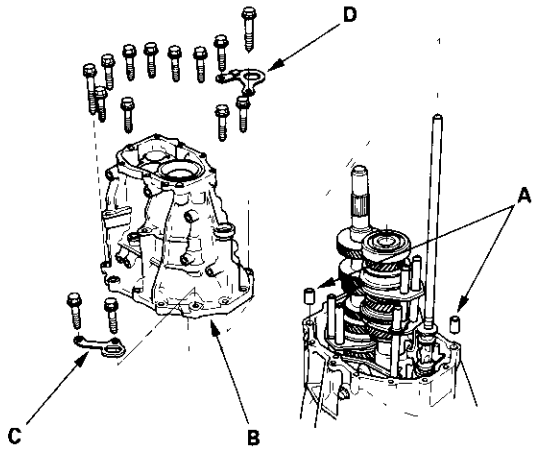


20. Tighten the 8 mm flange bolts in a crisscross pattern in several steps as shown.

**8 x 1.25 mm**
**27 N·m (2.8 kgf·m, 20 lbf·ft)**

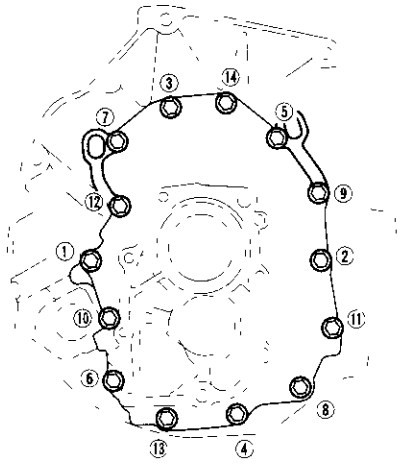


21. Apply liquid gasket (P/N 08718-0001) to the threads of the set screws (A), then install the steel balls and springs.

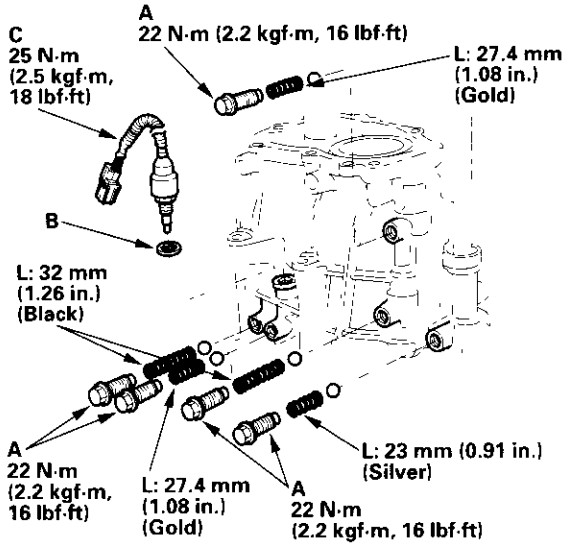


22. Install the washer (B) and back-up light switch (C).

23. Install the washers (A), drain plug (B), filler plug (C), 12 mm drain plug (D), and pick-up sensor (E) with a new O-ring.

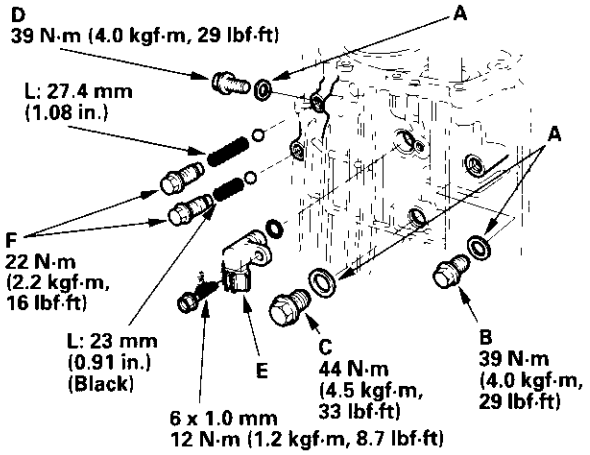


24. Apply liquid gasket (P/N 08718-0001) to the threads of the set screws (F), then install the steel balls and springs.

(cont'd)

## Transmission Reassembly (cont'd)

25. Install the oil pump outer rotor S, steel ball (A), spring (B), oil pump plate (C).

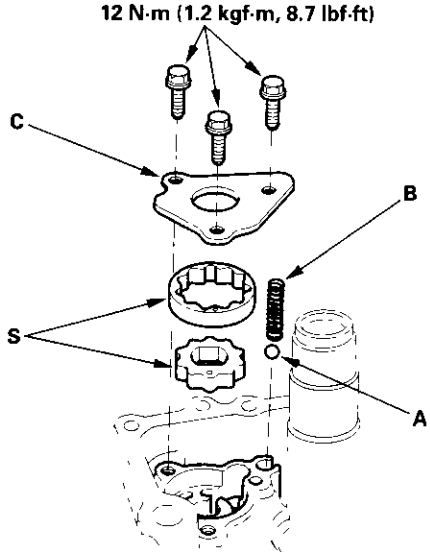


26. Install the secondary drive gear (A) on the countershaft using the special tool as shown.

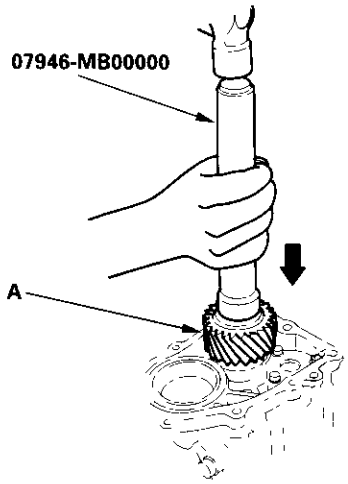


27. Install the needle bearing (A) on the countershaft using the special tool as shown.

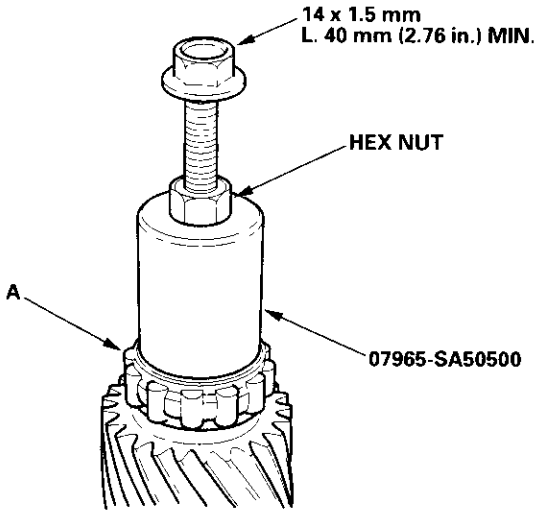


28. Install the spring washer and 29 mm locknut.

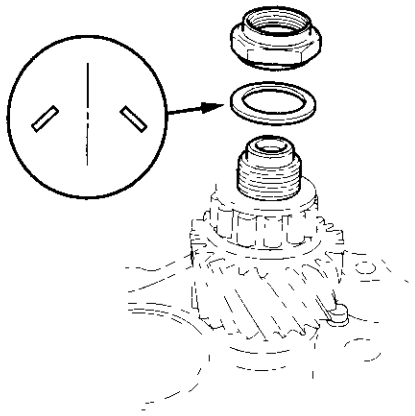

29. Install the special tool on the mainshaft, then tighten the 29 mm locknut (left-hand threads) to the specified value.

**Torque 172→ 0 → 172 N·m (17.5→ 0 → 17.5 kgf·m, 127→ 0 → 127 lbf·ft)**

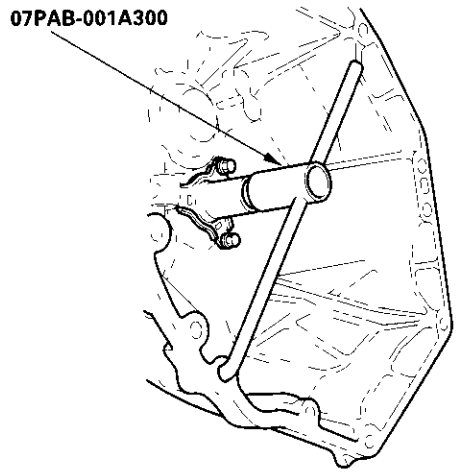


30. Stake the 29 mm locknut tab into the groove.

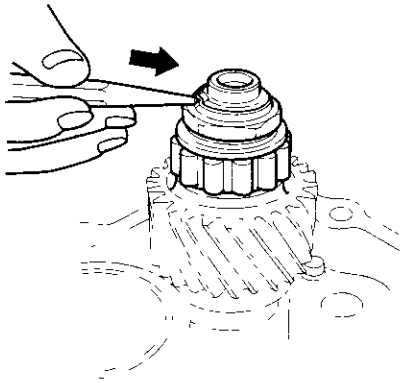

31. Install the oil pump gear and oil pump gear shaft.

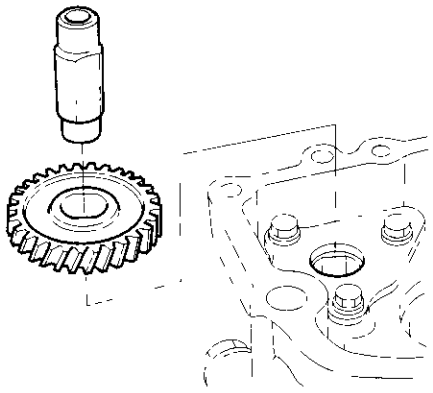

(cont'd)

## Transmission Reassembly (cont'd)

### Rear Cover Installation

NOTE: Prior to reassembling, clean all the parts in solvent, dry them, and apply lubricate to any contact surfaces.

1. Install the bearing outer race (A) using the special tools as shown.

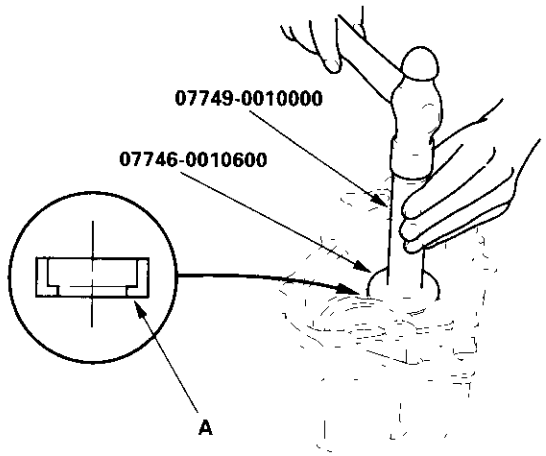


2. Install the shim and the bearing outer race into the rear cover using the special tools as shown.

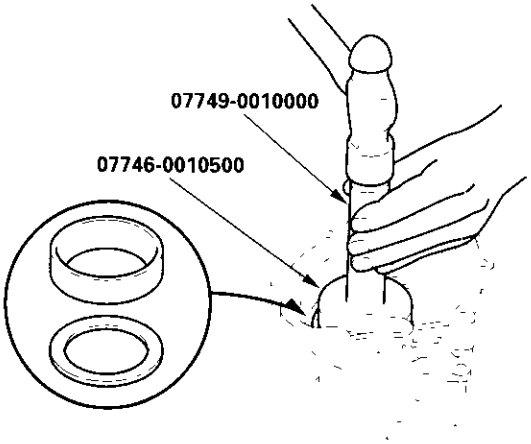


3. Install the secondary shaft assembly into the rear cover.

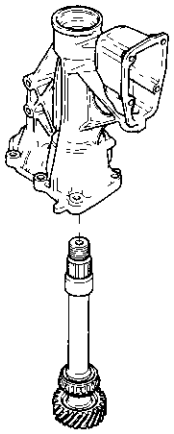

4. Install the new ball bearing (A) using the special tools and old bearing (B).

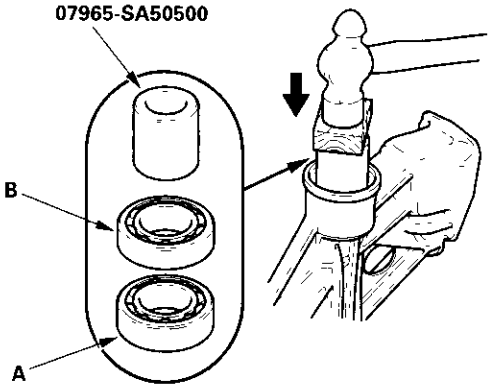

5. Install the oil seal (A) using the special tools.

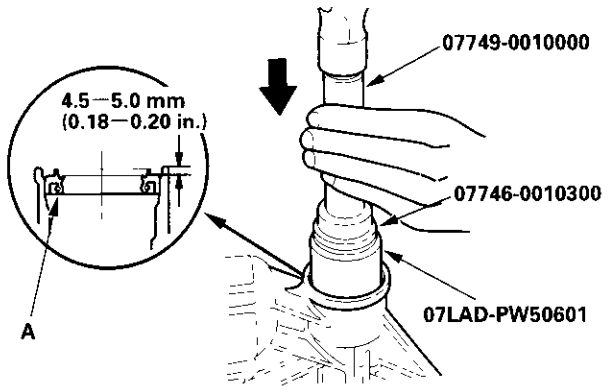


6. Install the companion flange (A) using the special tool as shown.

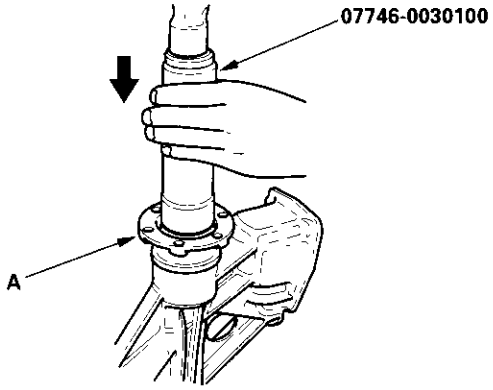


7. Install the O-ring (A), back-up ring (B), spring washer (C), and 27 mm locknut (D).

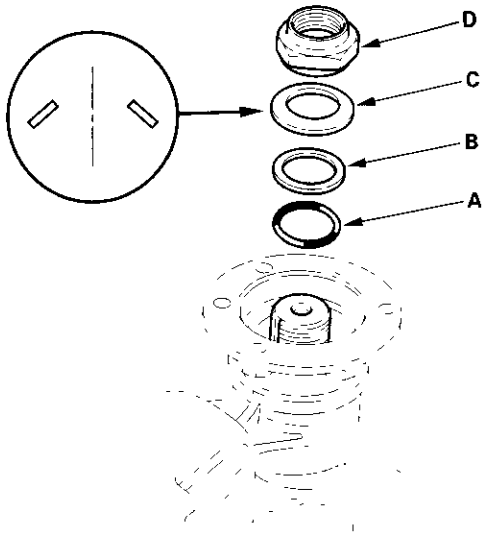


8. Install the special tool on the companion flange, then tighten the 27 mm locknut the to the specified value.

**Torque 162→ 0 → 162 N·m**
**(16.5→ 0 → 16.5 kgf·m,**
**119→ 0 → 119 lbf·ft)**

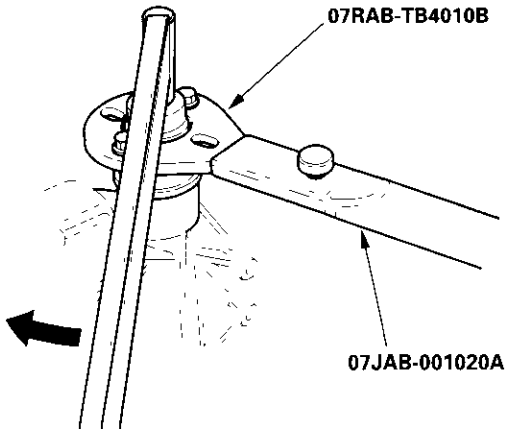


(cont'd)

## Transmission Reassembly (cont'd)

9. Stake the 27 mm locknut tab into the groove.

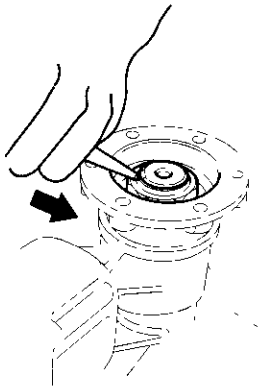

10. Install the shift rod pipe and O-rings.

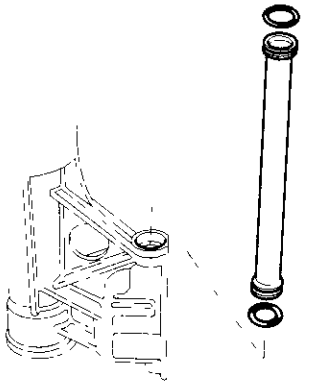

11. Remove the dirty oil from the rear cover sealing surface. Apply liquid gasket (P/N 08718-0001) to the sealing surface. Be sure to seal the entire circumference of the bolt holes to prevent oil leakage.

NOTE:
- If 5 minutes have passed after applying liquid gasket, reapply it and assemble the housings.
- Allow it to cure at least 20 minutes after assembly before filling the transmission with oil.

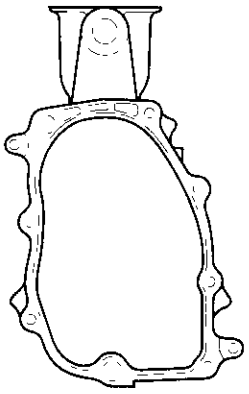

– – **Liquid gasket**

12. Install the 14 x 20 dowel pins (A), rear cover assembly (B), harness bracket (C), harness clamp (D), and 8 mm flange bolts.

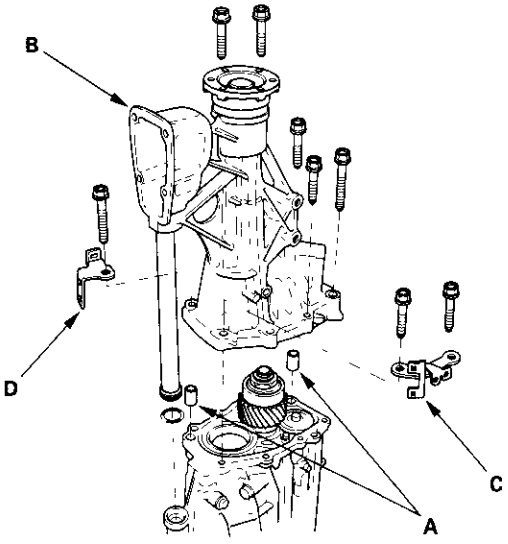

13. Tighten the 8 mm flange bolts in a crisscross pattern in several steps.

**8 x 1.25 mm**
**27 N·m (2.8 kgf·m, 20 lbf·ft)**

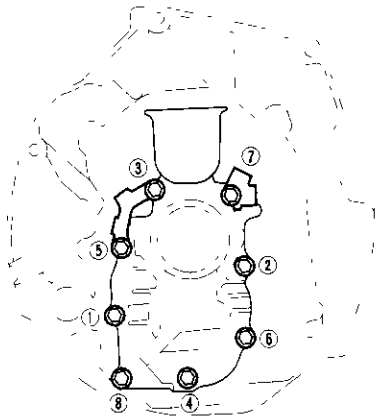


14. Lower the shift rod (A), then install the shift arm B (B), spring washer (C), and 8 mm special bolt.

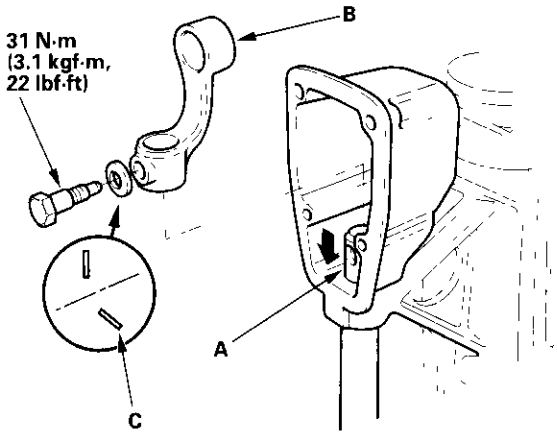


15. Install the shift lever housing.

**6 x 1.0 mm**
**9.8 N·m (1.0 kgf·m, 7.2 lbf·ft)**

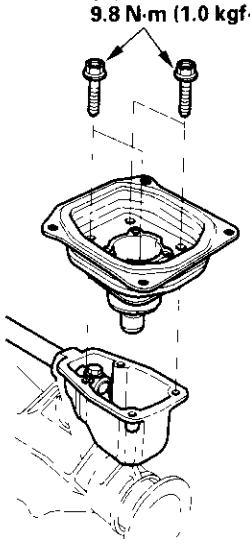

## Transmission Installation

1. Install the transmission rear mount (A).

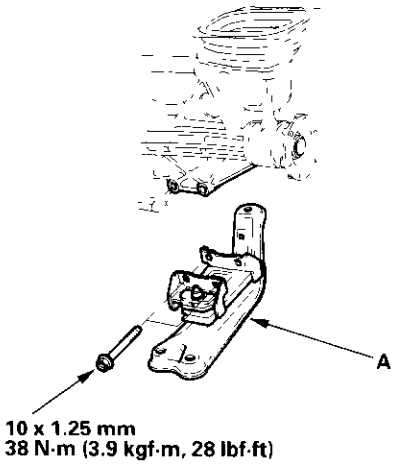


2. Check the two dowel pins are installed in the clutch housing.

3. Apply super high temp urea grease (P/N 08798-9002) to the release fork (A), release hanger (B), and release bearing guide (C). Install the release fork into the opening in the clutch housing.

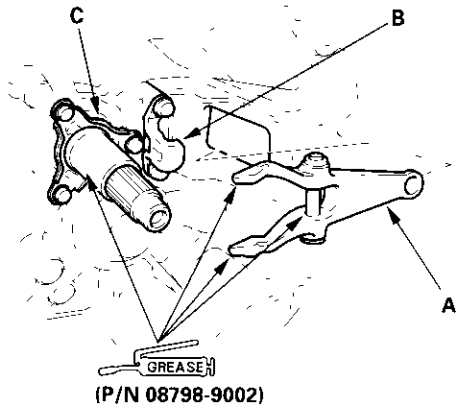


4. Pull the release fork (A) out until it stops, then wedge a shop towel (B) between the release fork and clutch housing to hold the release fork in place.

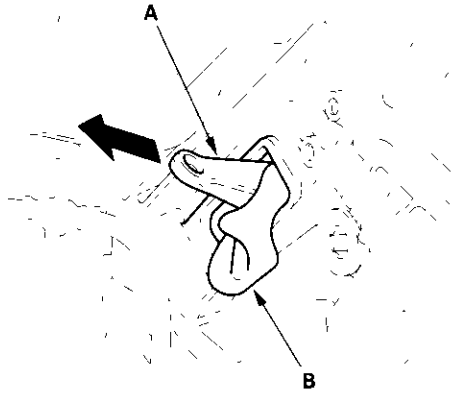


5. Place the transmission on a transmission jack, and raise it to the engine level.

6. Install the three upper transmission mounting bolts.

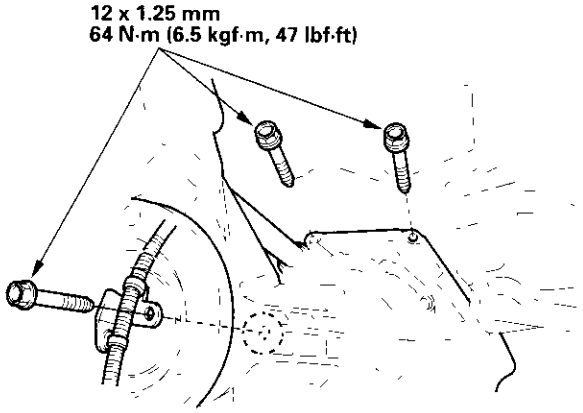

7. Install the wire harness (A) to the transmission, then connect the pick-up sensor connector (B).

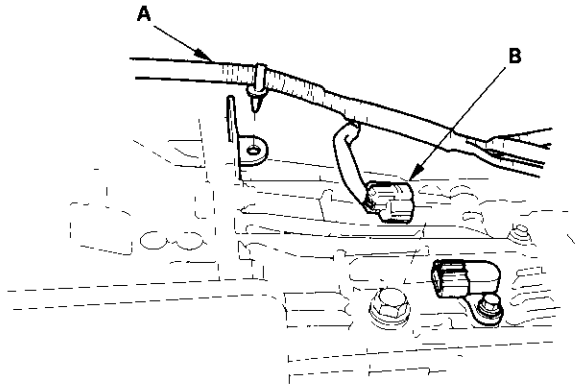


8. Raise the transmission, then install the three transmission rear mount bolts.

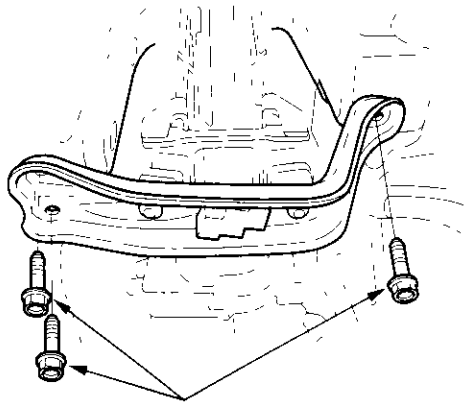

**10 x 1.25 mm**
**38 N·m (3.9 kgf·m, 28 lbf·ft)**

9. Place a floor jack under the front subframe and the engine mounting stiffener, and raise it to the frame.

**SPECIAL BOLTS**
Replace.
**14 x 1.5 mm**
**116 N·m (11.8 kgf·m, 85.3 lbf·ft)**

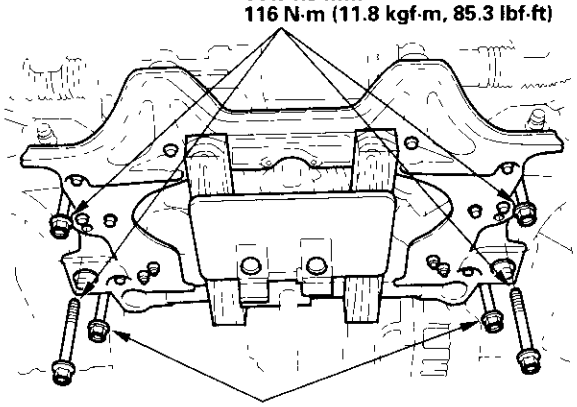

**SPECIAL BOLTS**
Replace.
**12 x 1.25 mm**
**59 N·m (6.0 kgf·m, 43 lbf·ft)**

10. Tighten the four mounting bolts, and install the two center mounting bolts.

11. Install the five lower transmission mounting bolts.

**10 x 1.25 mm**
**44 N·m (4.5 kgf·m, 33 lbf·ft)**

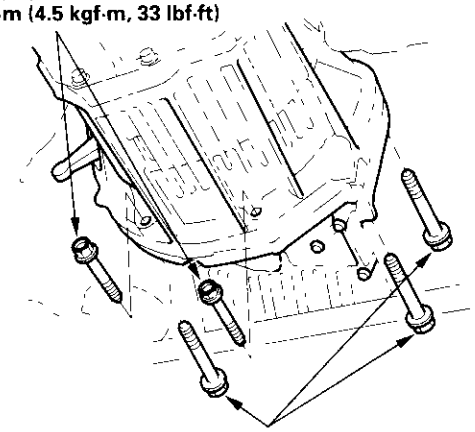

**12 x 1.25 mm**
**64 N·m (6.5 kgf·m, 47 lbf·ft)**

(cont'd)

## Transmission Installation (cont'd)

12. Remove the shop towel, and install the release fork onto the release hanger.

13. Apply super high urea greese (P/N 08798-9002) to the end of the slave cylinder push rod (A). Install the slave cylinder (B) and the release fork boot (C).

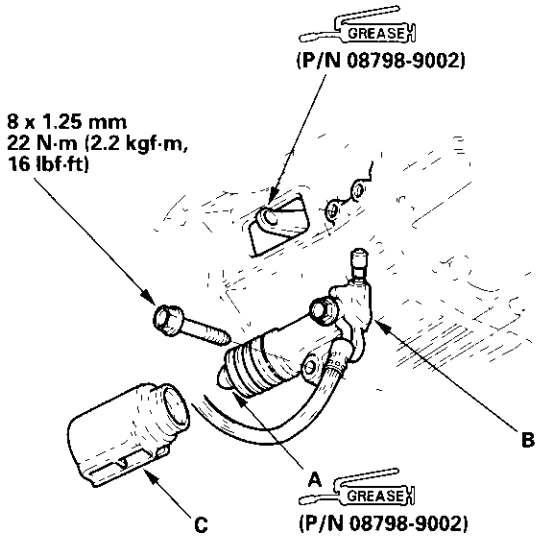


14. Install the four shift boot holder mounting bolts.

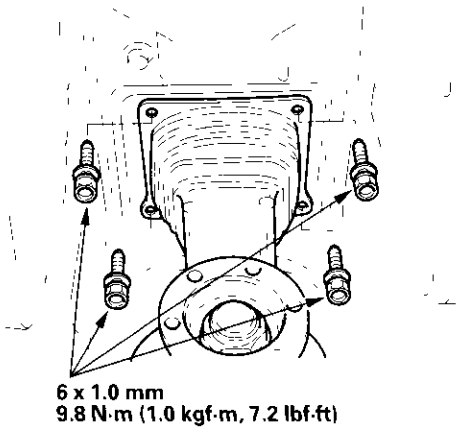


15. Install the propeller shaft (see page 16-18).

16. Install the gasket (A), exhaust manifold (B), and the exhaust manifold bracket (C).

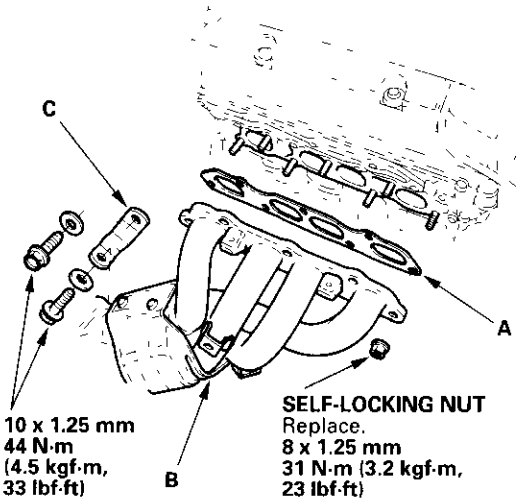


17. Install the gaskets (A) and three way catalytic converter (TWC) (B).

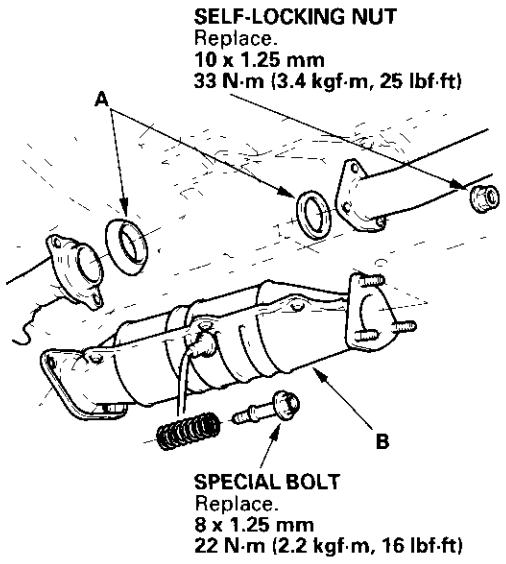

18. Install the wire harness (A) onto the transmission, then connect the heated oxygen sensor (HO2S) (B), secondary heated oxygen sensor (secondary HO2S) (C), and the back-up light switch (D) connectors.

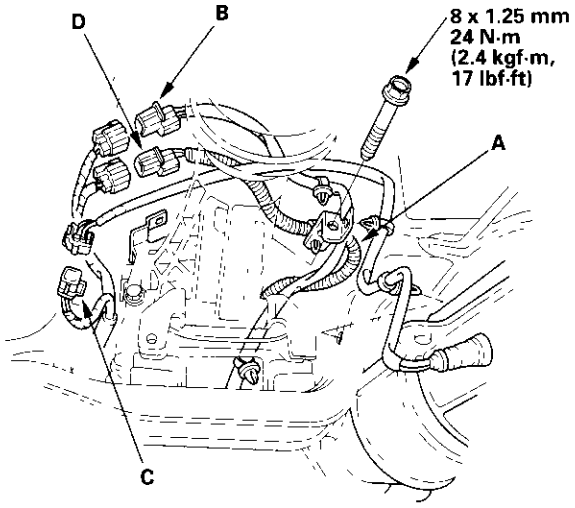


19. Install the intake manifold bracket (A) lower mounting bolt, then install the wire harness (B) on the intake manifold bracket.

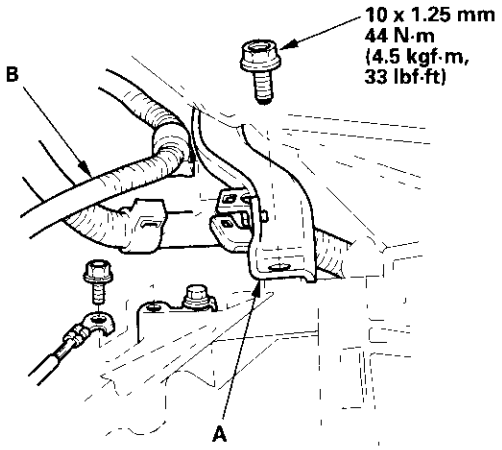


20. Reconnect the torque sensor 3P connector (A), and install the wire harness clamp (B).

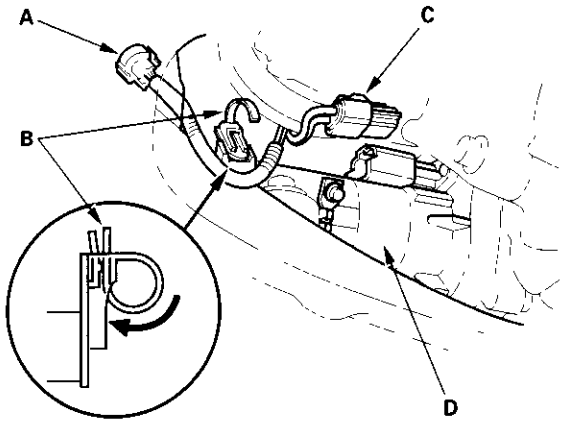


21. Reconnect the 2P connector (C) to the steering gearbox (D).

22. Install the splash shield.

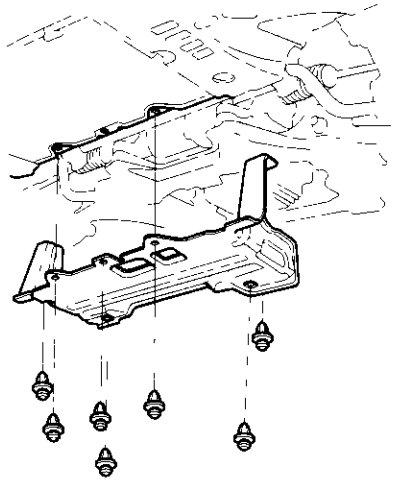

(cont'd)

## Transmission Installation (cont'd)

23. Connect the TDC1 (A) and TDC2 (B) sensor connectors.

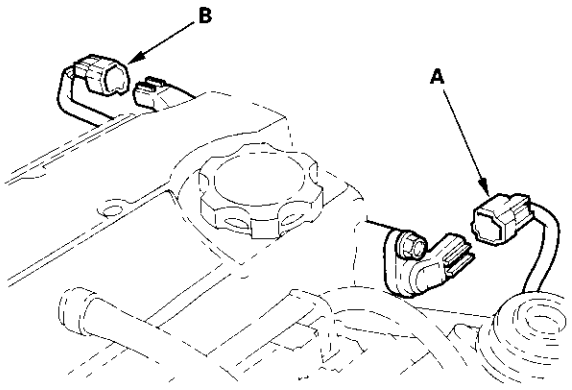


24. Install the upper intake manifold bracket mounting bolt (A) and upper starter motor mounting bolt (B). Connect the hose (C) to the suction valve.

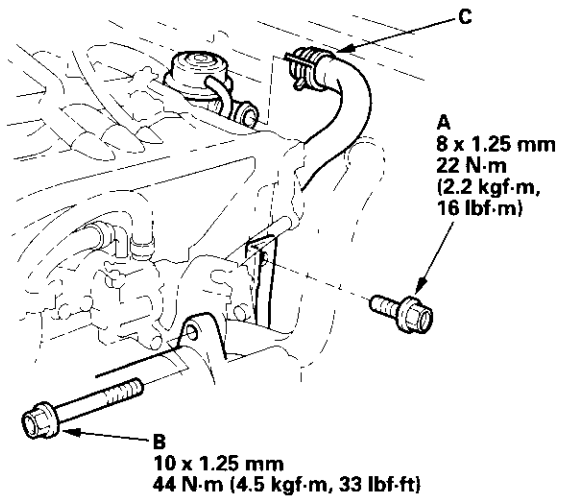


25. Install the heat shield.

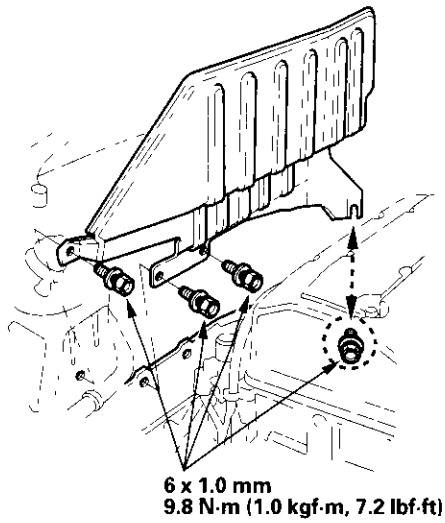


26. Install the exhaust manifold cover.

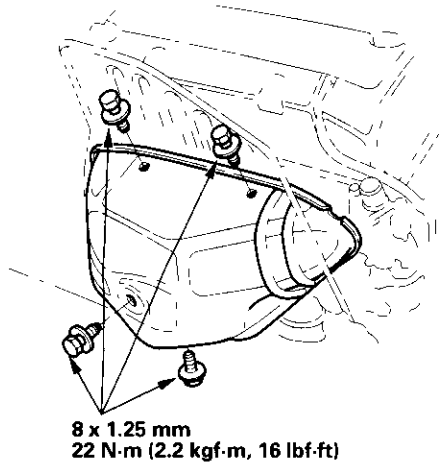

27. Install the A/C compressor, then connect the 1P connector.

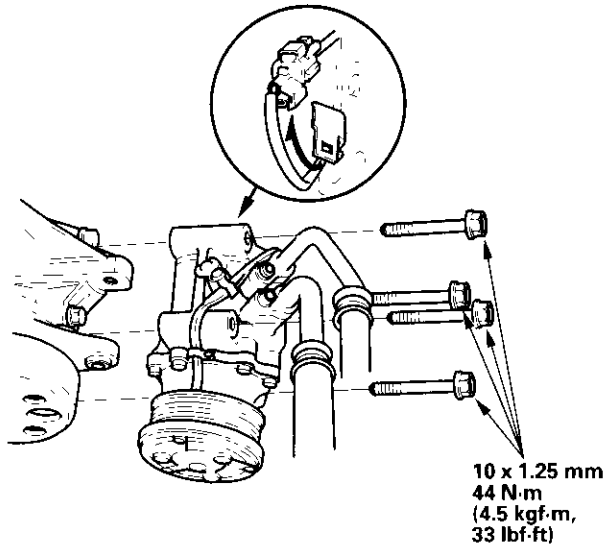


28. Install the alternator and the alternator-compressor belt (see page 4-25).

29. Connect the steering joint (A) by aligning the reference marks (B).

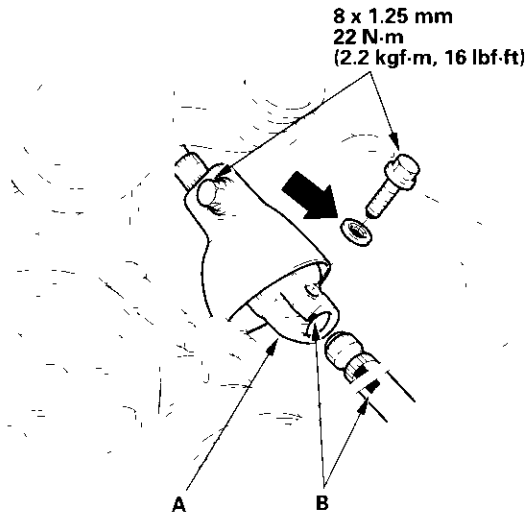


30. Install the air cleaner housing assembly.

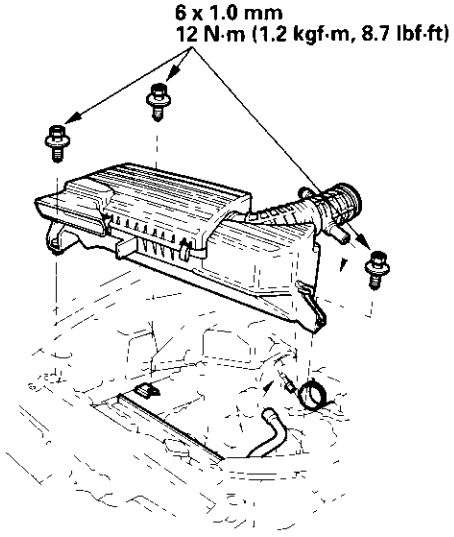


31. Install the shift lever spring and the shift lever.

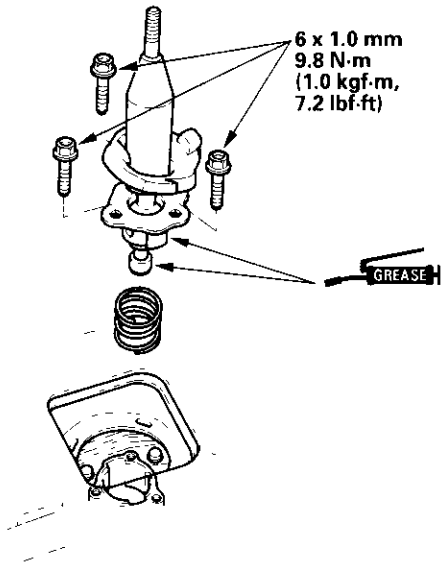


(cont'd)

## Transmission Installation (cont'd)

32. Install the shift boot and the boot holder.

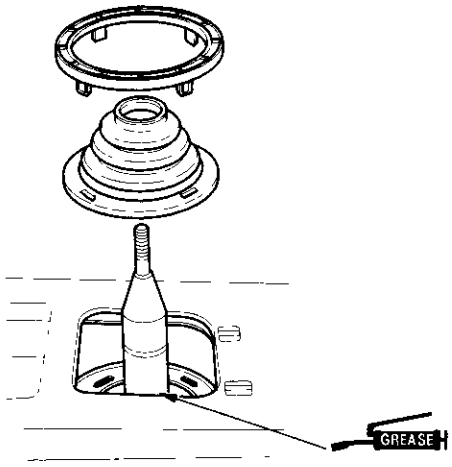


33. Install the center console (see page 20-76).

34. Install the shift lever knob, and tighten the locknut.

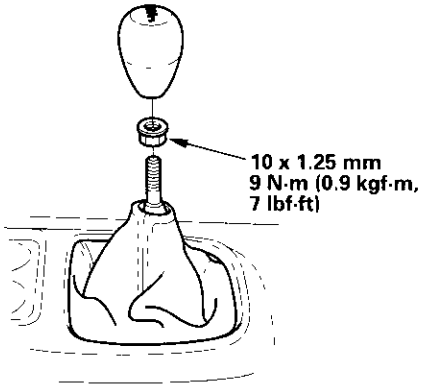


35. Install the battery. Connect the positive (+) cable first, then the negative (−) cable to the battery.

36. Check the transmission fluid (see page 13-3).

37. Test-drive the vehicle.

38. Check the clutch operation.

39. Check the transmission for noise and smooth operation.

40. Check the front wheel alignment (camber angle, caster angle, and front toe) (see page 18-5).

# Transaxle

## Rear Differential


Special Tools ..... 15-2
Precautions for Torsen Type Limited Slip Differential (LSD) ..... 15-3
Torsen Type Limited Slip Differential (LSD) Operation Check ..... 15-3
System Description ..... 15-4
Differential Oil Inspection and Replacement ..... 15-6
Differential Removal ..... 15-7
Differential Case Assembly Removal and Installation ..... 15-9
Oil Seal Replacement ..... 15-10
Backlash Inspection ..... 15-11
Differential Disassembly ..... 15-12
Differential Reassembly ..... 15-18
Differential Installation ..... 15-26
Differential Mount Replacement ..... 15-29




## Special Tools

| Ref. No. | Tool Number | Description | Qty |
|---|---|---|---|
| ① | 07JAD-PL90100 | Oil Seal Driver | 1 |
| ② | 07JAB-001020A | Holder Handle | 1 |
| ③ | 07LAD-PW50601 | Attachment, 40 x 50 mm I.D. | 1 |
| ④ | 07MAC-SL00200 | Ball Joint Remover, 28 mm | 1 |
| ⑤ | 07MAD-PR90100 | Attachment, 45 x 55 mm I.D. | 1 |
| ⑥ | 07NAD-PX40100 | Attachment, 78 x 80 mm | 1 |
| ⑦ | 07RAB-TB4010B | Companion Flange Holder | 1 |
| ⑧ | 07725-0030000 | Universal Holder | 1 |
| ⑨ | 07746-0030100 | Driver, 40 mm I.D. | 1 |
| ⑩ | 07746-0030300 | Attachment, 30 mm I.D. | 1 |
| ⑪ | 07749-0010000 | Driver | 1 |

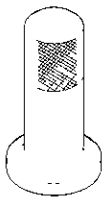

①

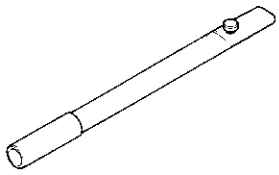

②

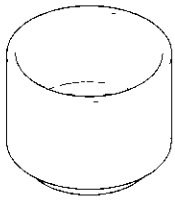

③

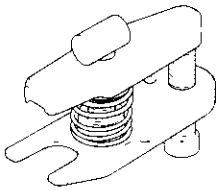

④

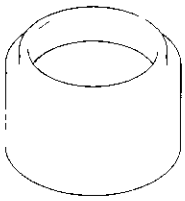

⑤

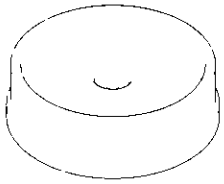

⑥

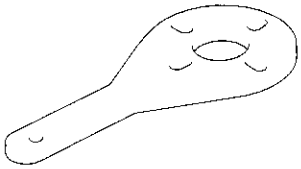

⑦

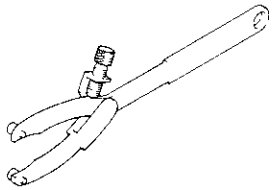

⑧

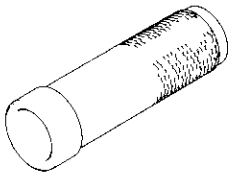

⑨

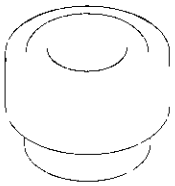

⑩

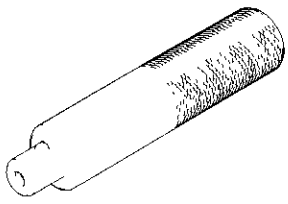

⑪

## Precautions for Torsen Type Limited Slip Differential (LSD)

- The Torsen differentials are mechanical limited slip differentials which deliver the available power to the wheels and axles with the most grip or resistance as the engine torque output increases.
- Avoid repair procedures that require the engine running with one rear wheel raised; such as an on-car-wheel balancer.
- Do not tow the vehicle with the rear wheels on the ground.
- Never dismantle any part of the differential other than right and left tapered roller bearings.
- To optimize the Torsen differentials, equip your vehicle with rear tires of the same brand, the same size, and with even wear.

## Torsen Type Limited Slip Differential (LSD) Operational Check

The Torsen type limited slip differential (LSD) distributes optimum power between the two driving axles according to the difference in torque demanded by the driving wheels. Under no circumstances should the engine be started with either wheel raised off the ground, such as using an on-car-wheel balancer or when transporting the vehicle in the event of accident.

1. Set the parking brake, and block the rear wheels.
2. Raise the rear of the vehicle, and make sure it is securely supported.
3. With the engine off, shift the transmission into 1st gear, and release the parking brake.
4. Rotate either rear wheel by hand, and check that the other wheel rotates in the opposite direction. Check both wheels.
5. If the opposite rear wheel does not rotate, or if you cannot spin the rear wheels at all, the limited slip differential is faulty and should be replaced.

## System Description

The vehicle uses the Torsen type limited slip differential (LSD) which is rubber mounted to the sub-frame.

**Construction**

- The Torsen type LSD assembly consists of the two side gears, eight planetary gears, three side washers, two center washers, a gear case cover and a gear case.
- The planetary gear consists of the short and long planetary gears, and the long planetary gear meshes horizontally with the side gear. The two planetary gears mesh with the side gears at both ends.
- The planetary gears are housed in the pockets of the gear case.
- The left and right output shafts are engaged with the side gears.
- The Torsen type LSD assembly is a non-serviceable part except the tapered roller bearings. If the Torsen type (LSD) assembly is faulty, it must be replaced as an assembly.

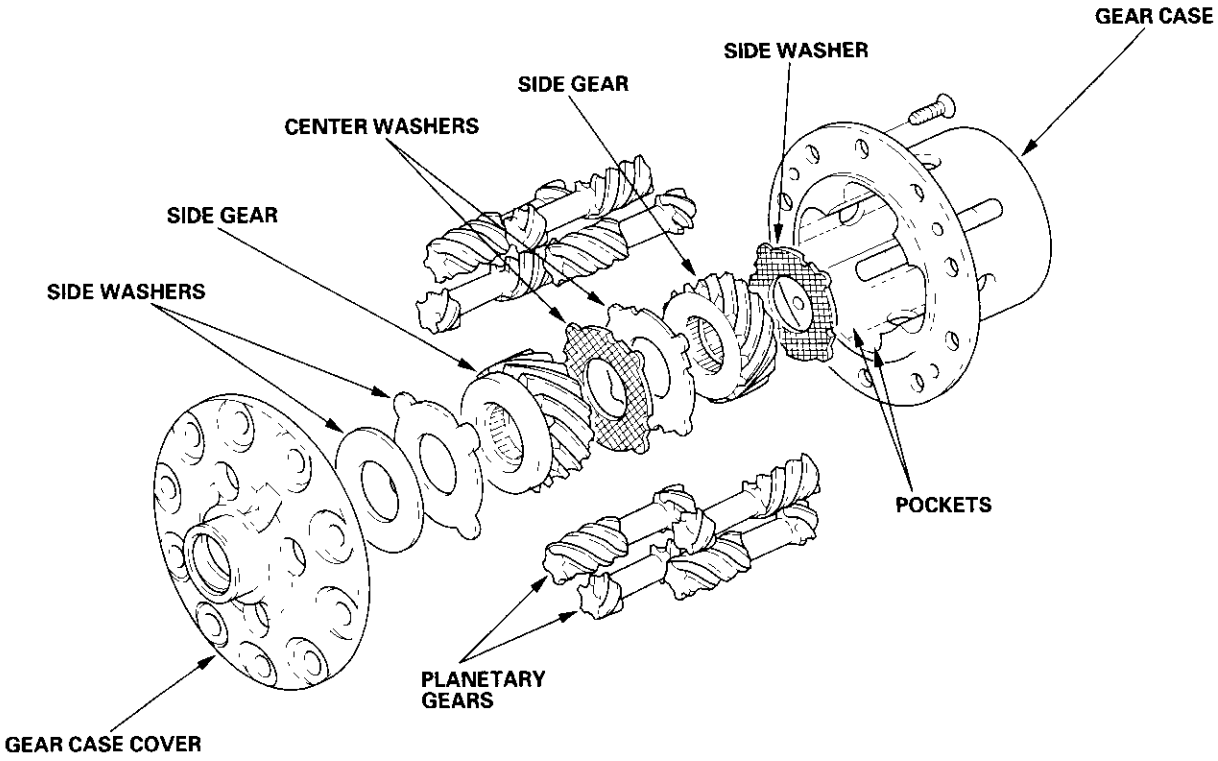


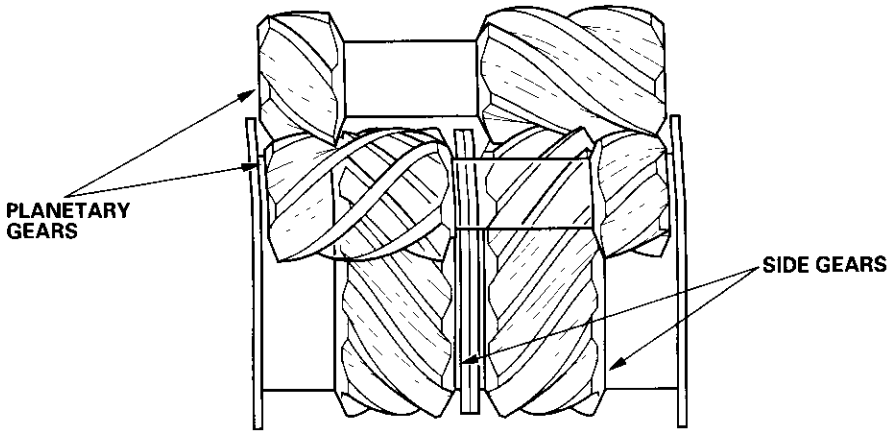

**Operation**

- Straight-road driving
  The differential carrier and gears rotate together as a unit when both wheels rotate at the same speed. Turning effort from the final driven gears are directly transmitted to both wheels.

- When rounding a curve
  When the vehicle rounds a curve, the differential allows the outer wheel to rotate a little faster than the inner wheel. When this takes place, the short and long pinion gears rotate, and walk around the side gears in the directions shown. If, for example, the right shaft is rotated in a counterclockwise direction with the differential carrier held stationary, the force is transmitted through the right side gear, short pinion gears and long pinion gears to the left side gear, causing the left shaft to rotate in a clockwise direction. This allows the outer wheel to turn more times than the inner wheel when the vehicle goes around a turn.

(1)

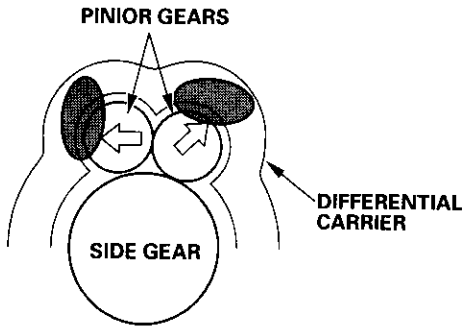


(2)

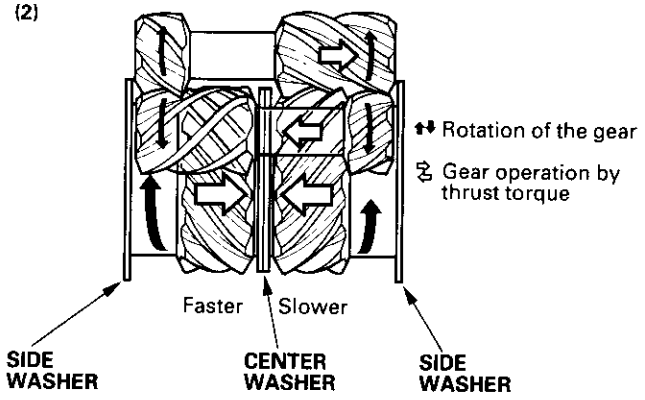


- When limiting differential action
  The limited slip differential acts to limit the differential action when either wheel slips on ice or snow or on turns. This is done by using the friction created between each gear and differential carrier:
  (1) The pinions are forced against the differential carrier by the force as they are rotated and repelled outward.
  (2) The ends of the pinion gears are held firmly against the differential carrier due to the side thrust from the helically cut gears.

(1)

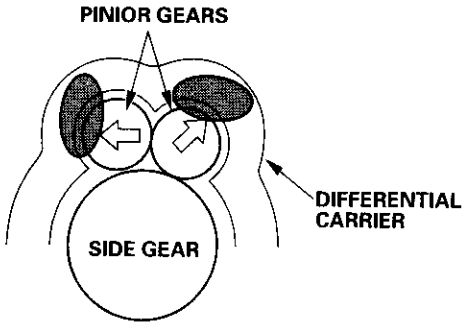


(2)

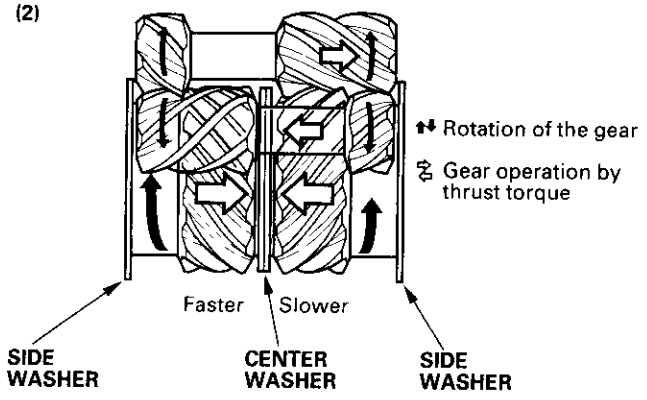


With the pinion gears locked, the torque applied to the slipping wheel is reduced and the torque delivered to the other wheel is increased.

## Differential Oil Inspection and Replacement

1. With the vehicle on level ground, inspect the differential oil with engine OFF.

2. Remove the oil filler plug (A) and sealing washer (B), then check the condition of the oil, and make sure the oil is at the proper level (C).

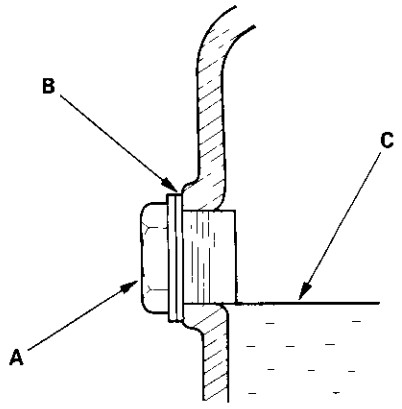


3. The oil level must be up to the fill hole. If it is below the hole, add the recommended oil until it runs out, then reinstall the oil filler plug with a new sealing washer.

4. If the differential oil is dirty, remove the drain plug (D), and drain the oil.

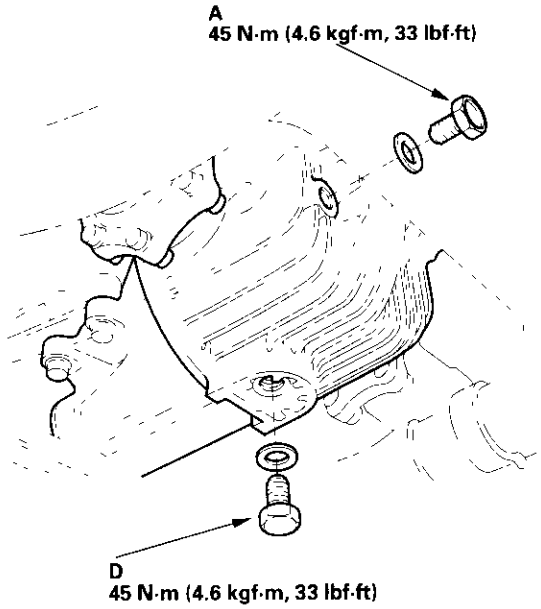


5. Clean the drain plug, then reinstall with a new washer, and refill the differential with the recommended oil to the proper level.

**Oil capacity**
**0.74 ℓ (0.78 US qt), at oil change**
**0.77 ℓ (0.81 US qt), at overhaul**

**Recommended oil**
**Hypoid gear oil**
**API Classification GL5 or GL6,**
**Viscosity: SAE # 90**

6. Reinstall the oil filler plug with a new washer.

## Differential Removal

**Special Tools Required**
Ball joint remover, 28 mm 07MAC-SL00200

1. Make a reference marks across the propeller shaft, the transmission, and the rear differential, then remove the propeller shaft (see page 16-17).

2. Remove the cotter pin from the lower arm ball joint castle nut, and remove the nut.

   NOTE:
   - To avoid damaging the ball joint, install a hex nut on to the threads of the ball joint.
   - Be careful not to damage the ball joint boot when installing the remover.

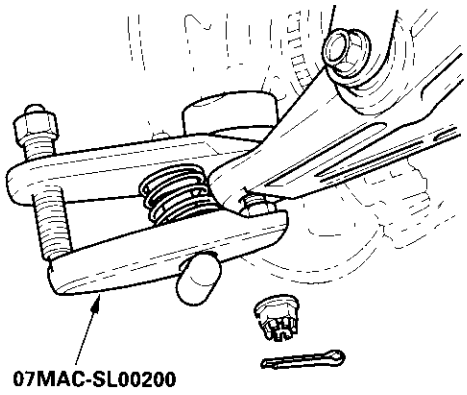


3. Separate the ball joint from the lower arm with the special tool (see page 18-10).

4. Remove the ABS sensor harness from the upper arm.

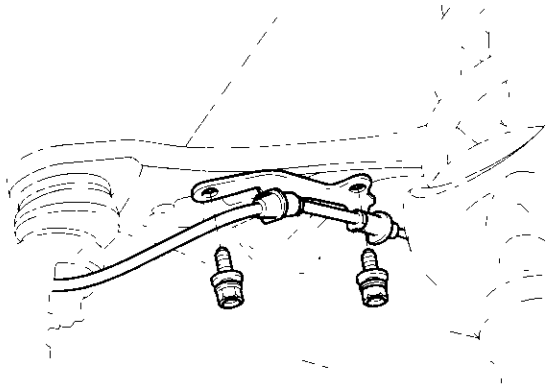

5. Make a reference marks (A) across the inboard joint (B) and the rear differential (C).

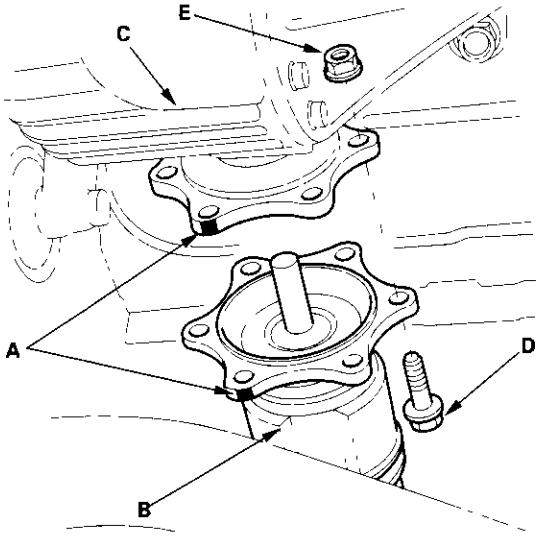


6. Remove the six inboard joint mounting bolts (D) and nuts (E), then remove the inboard joint from the rear differential.

7. Remove the rear suspension stiffener (A).

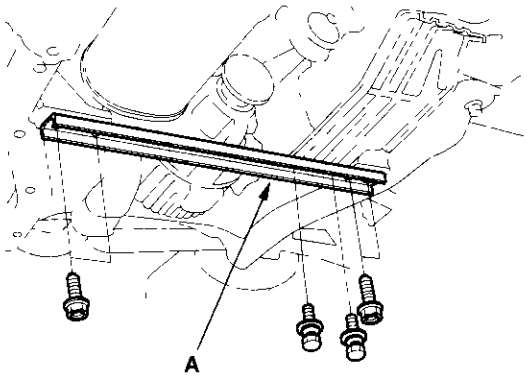


(cont'd)

## Differential Removal (cont'd)

8. Remove the canister cover.

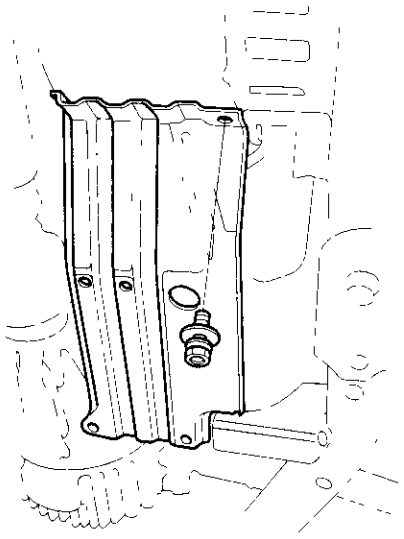

9. Place a floor jack under the rear differential.

10. Remove the four differential mount bracket B mounting nuts.

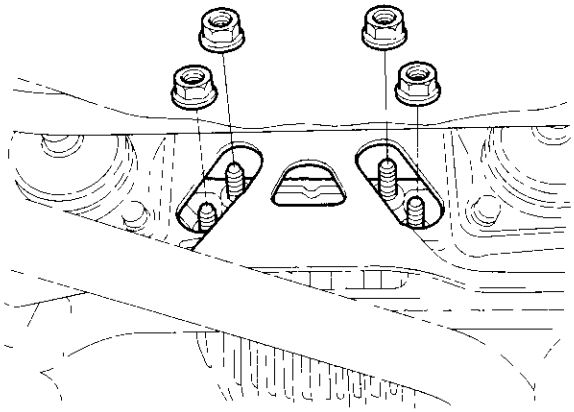

11. Remove the four differential mount A mounting bolts.

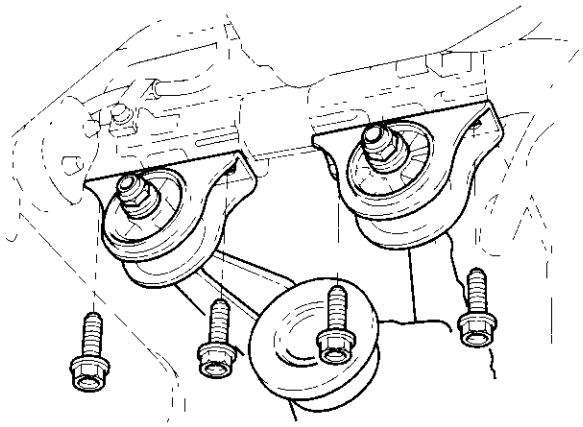

12. Lower the rear differential on the floor jack.

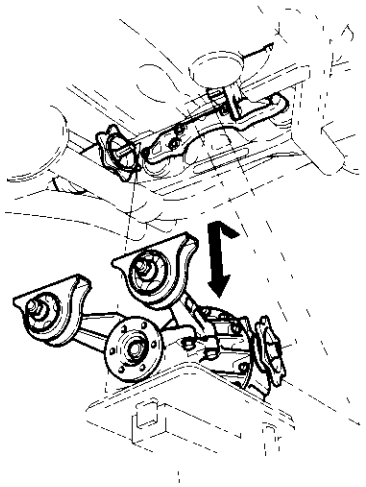

13. Remove the right and left differential mount bracket A from the differential (see page 15-29).

## Differential Case Assembly Removal and Installation

1. Remove the output shafts (A) from the differential case assembly using the pry bars (B).

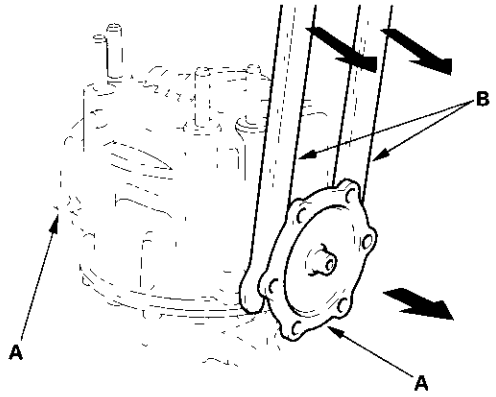


2. Remove the ten mounting bolts in a crisscross pattern in several steps, then remove the differential case assembly.

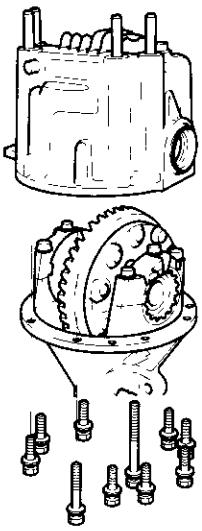

3. Remove the dirt and oil from the sealing surfaces. Apply liquid gasket (P/N 08718-0001) to the sealing surface. Be sure to seal the entire circumference of the bolt holes to prevent oil leakage.

NOTE:
- If 5 minutes have passed after applying liquid gasket, reapply it and assemble the housings.
- Allow it to cure at least 20 minutes after assembly before filling the differential with oil.

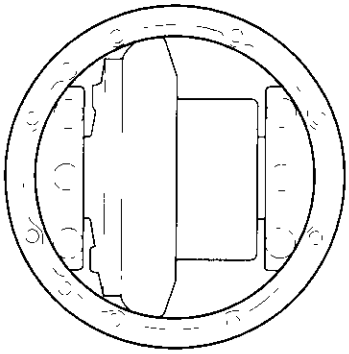

— — - Liquid gasket

4. Install the differential case assembly, then torque the 10 mounting bolts in a crisscross pattern in several steps.

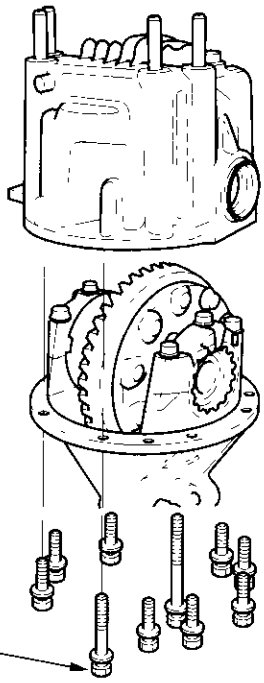

## Oil Seal Replacement

**Special Tools Required**
Oil seal driver 07JAD-PL90100

1. Remove the output shafts (A) from the differential case assembly using the pry bars (B).

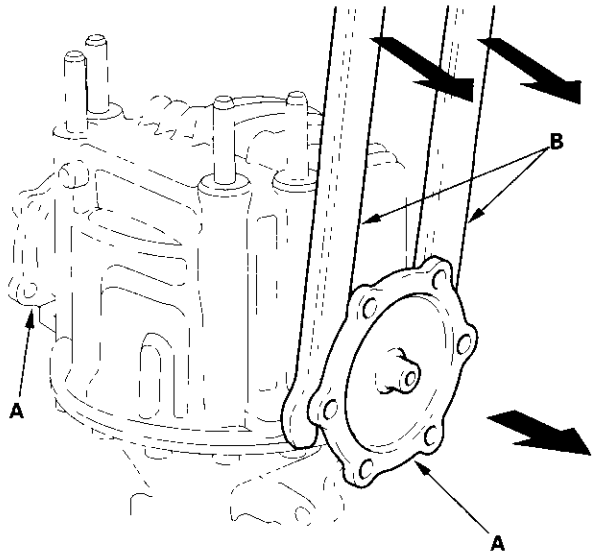


2. Remove the oil seal from the differential case assembly.

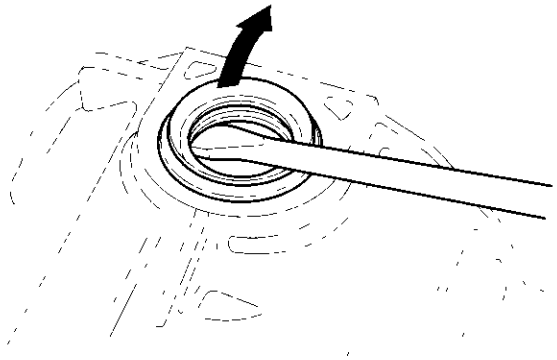

3. Install the oil seal using the special tools as shown.

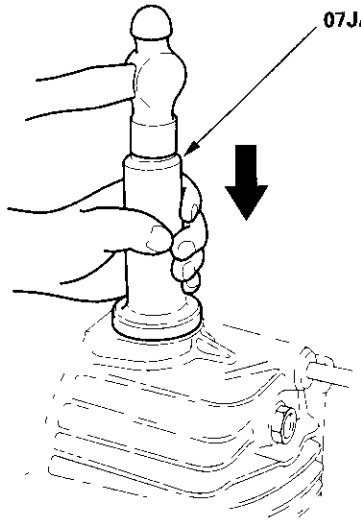


4. Repeat steps 1 through 3 for the other side.

## Backlash Inspection

1. Remove the output shafts and differential case assembly (see page 15-9).

2. Thoroughly clean the ring gear and drive pinion teeth, and paint the ring gear teeth with Prussian Blue lightly and evenly.

3. Rotate the pinion three full turn in the forward and reverse directions to produce a contact pattern on the ring gear.

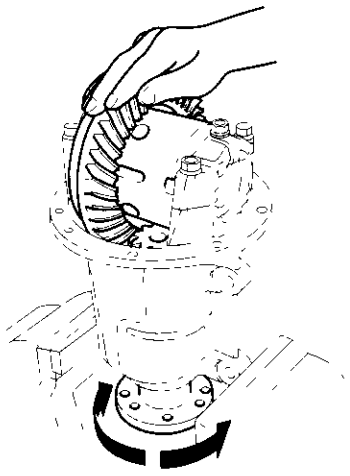

**Good contact pattern**



4. Measure the backlash of the ring gear.

   - Set the dial gauge tip at a right angle to the ring gear teeth.
   - Measure four points on the ring gear 90° apart.
   - Backlash will be within the standard if at one point the ring gear backlash is within the standard, minimum measurement of 0.05 mm or above and the difference between the maximum and minimum measurements do not exceed 0.07 mm.
   - Both adjustment screws must be adjusted. For example; if you turn one adjustment screw one notch clockwise, you must turn the other adjustment screw one notch counterclockwise.

**Backlash:**
**Standard: 0.09 – 0.11 mm (0.0035 – 0.0043 in.)**
**Minimum: 0.05 mm (0.0020 in.)**
**Difference range: 0.07 mm (0.0028 in.)**

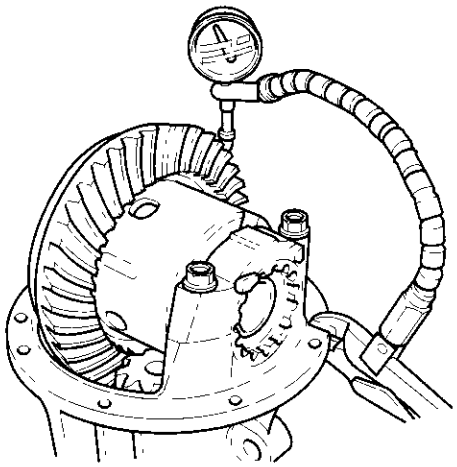

## Differential Disassembly

### Exploded View

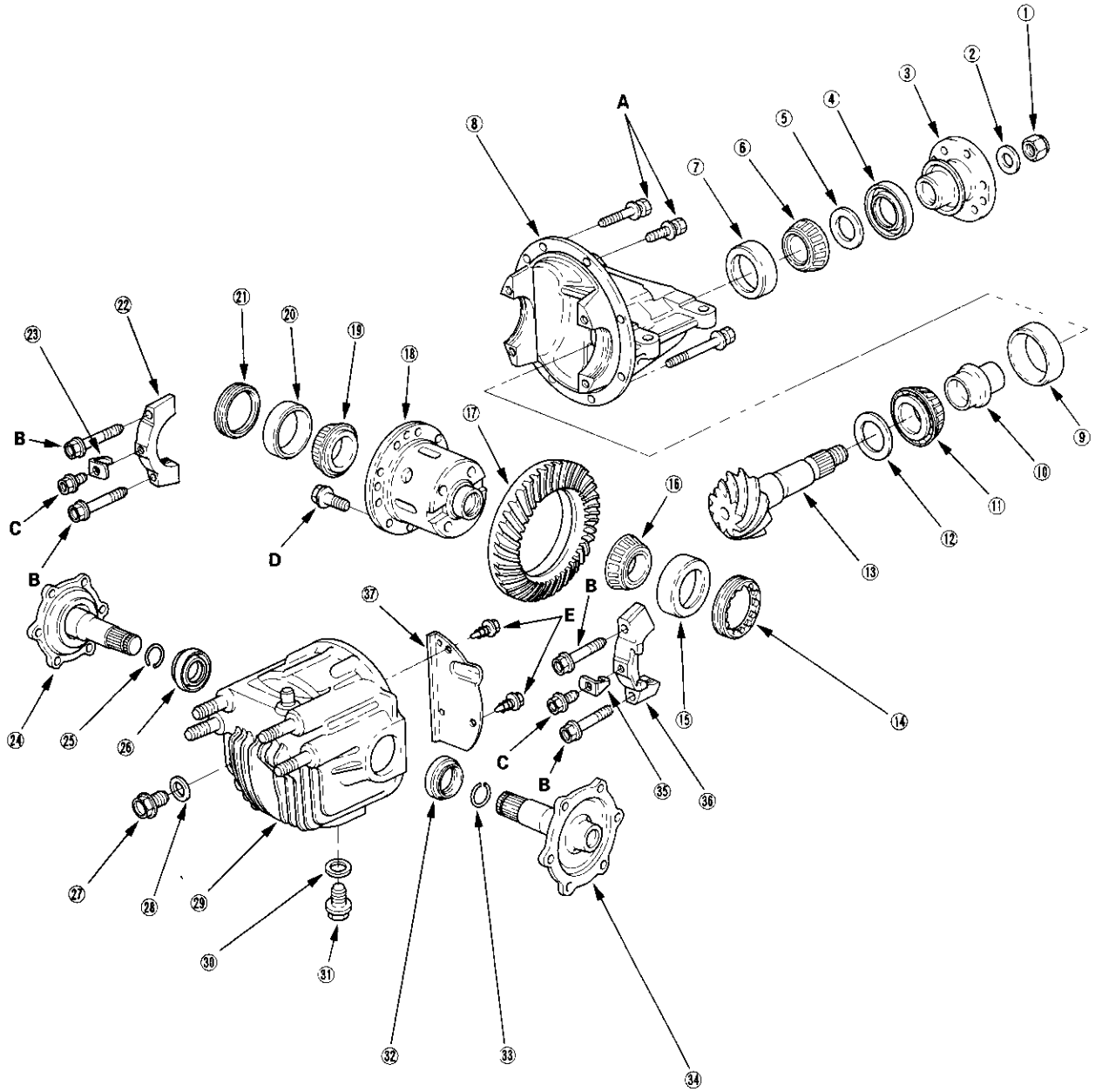

A: 24 N·m (2.4 kgf·m, 17 lbf·ft)
B: 45 N·m (4.6 kgf·m, 33 lbf·ft)
C: 22 N·m (2.2 kgf·m, 16 lbf·ft)
D: 75 N·m (7.6 kgf·m, 55 lbf·ft)
E: 11 N·m (1.1 kgf·m, 8 lbf·ft)

① **LOCKNUT**
Replace.
**127—284 N·m (13.0—29.0 kgf·m, 94—210 lbf·ft)**
② **DRIVE PINION WASHER**
③ **COMPANION FLANGE**
④ **OIL SEAL**
Replace.
⑤ **SPACER**
⑥ **TAPERED ROLLER BEARING**
⑦ **BEARING OUTER RACE**
⑧ **DIFFERENTIAL CARRIER HOUSING**
⑨ **BEARING OUTER RACE**
⑩ **PINION SPACER**
Replace.
⑪ **TAPERED ROLLER BEARING**
⑫ **THRUST WASHER**
⑬ **DRIVE PINION**
⑭ **ADJUSTMENT SCREW**
⑮ **BEARING OUTER RACE**
⑯ **TAPERED ROLLER BEARING**
⑰ **RING GEAR**
⑱ **TORSEN LSD ASSEMBLY**
⑲ **TAPERED ROLLER BEARING**
⑳ **BEARING OUTER RACE**
㉑ **ADJUSTMENT SCREW**
㉒ **BEARING CAP**
㉓ **LOCK PLATE**
㉔ **OUTPUT SHAFT**
㉕ **CLIP**
Replace.
㉖ **OIL SEAL**
Replace.
㉗ **FILLER PLUG**
**45 N·m (4.6 kgf·m, 33 lbf·ft)**
㉘ **SEALING WASHER**
Replace.
㉙ **DIFFERENTIAL CASE**
㉚ **SEALING WASHER**
Replace.
㉛ **DRAIN PLUG**
**45 N·m (4.6 kgf·m, 33 lbf·ft)**
㉜ **OIL SEAL**
Replace.
㉝ **CLIP**
Replace.
㉞ **OUTPUT SHAFT**
㉟ **LOCK PLATE**
㊱ **BEARING CAP**
㊲ **BREATHER PLATE**

(cont'd)

## Differential Disassembly (cont'd)

**Special Tools Required**
- Holder handle 07JAB-001020A
- Companion flange holder 07RAB-TB4010B

1. Carefully clamp the rear differential in a vise.

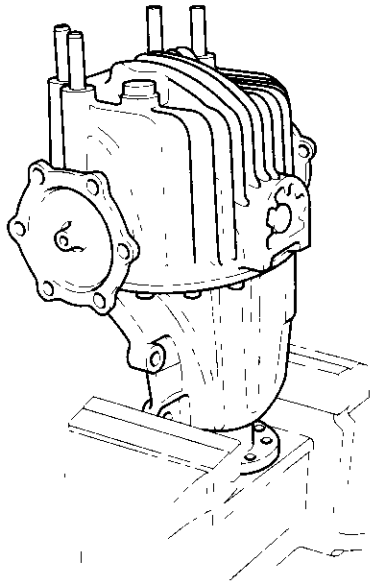

2. Pry out the output shafts (A) with the pry bars (B).

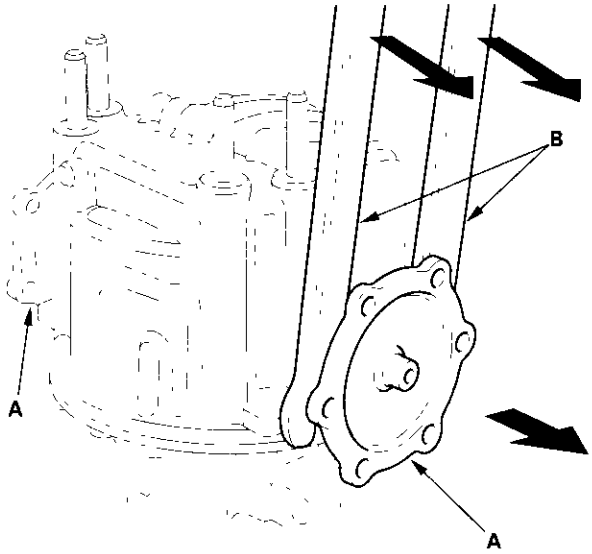


3. Remove the output shafts.

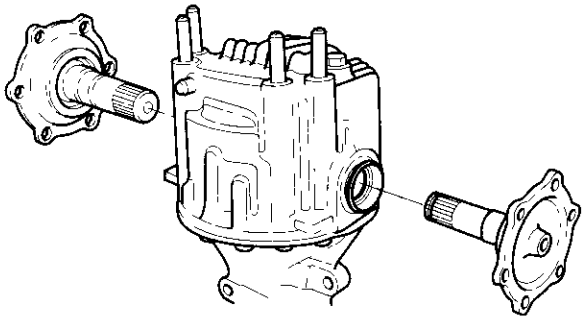

4. Remove the 10 mounting bolts in a crisscross pattern in several steps, then remove the differential case assembly.

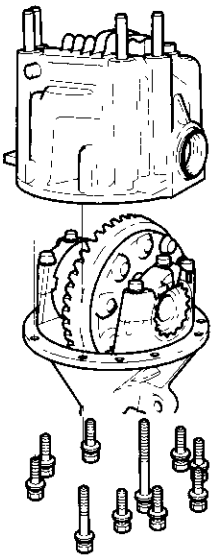

5. Make a mark on the bearing cap, adjust screw, and differential carrier case.

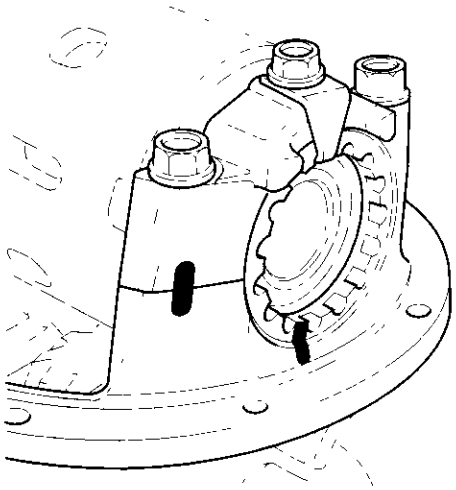

6. Remove the lock plates and bearing caps.

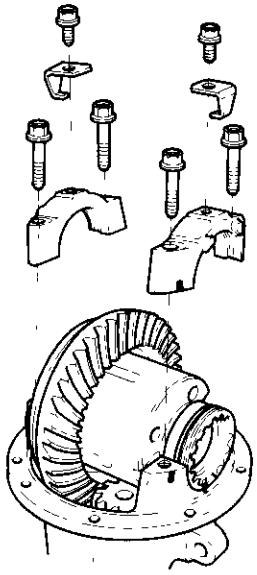

7. Remove the adjustment screws (A), bearing outer races (B), and Torsen LSD assembly (C).

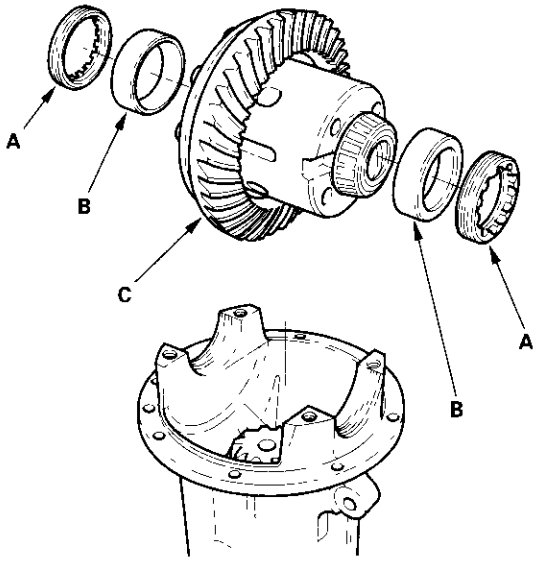


8. Install the special tools on the companion flange, then remove the locknut (A) and pinion washer (B).

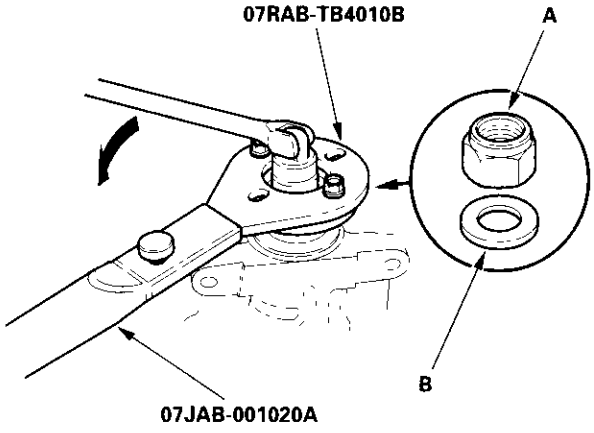


(cont'd)

## Differential Disassembly (cont'd)

9. Remove the companion flange using a commercially available bearing puller as shown.

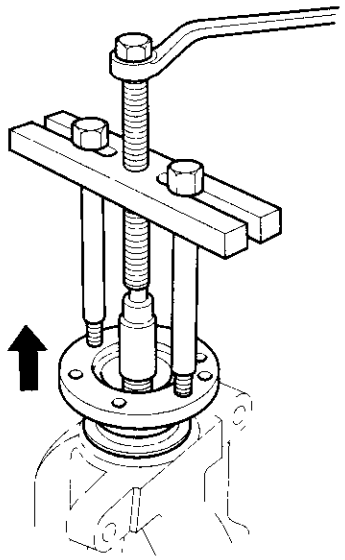

10. Remove the drive pinion (A) and pinion spacer (B) by tapping on the drive pinion with a plastic hammer.

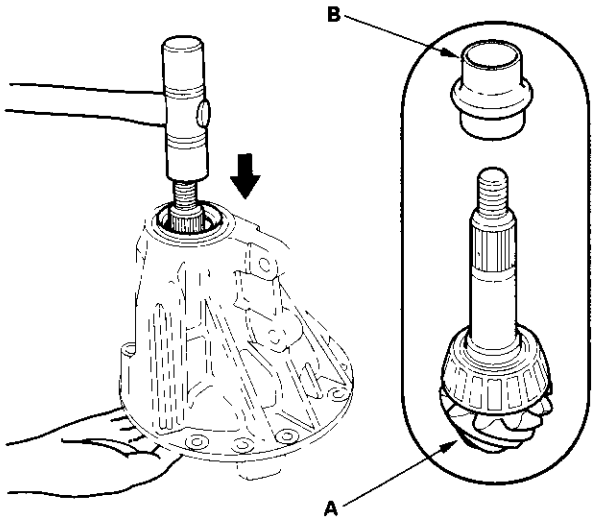


11. Remove the bearing outer race (A), tapered roller bearing (B), thrust washer (C), and oil seal (D) from the differential carrier housing.

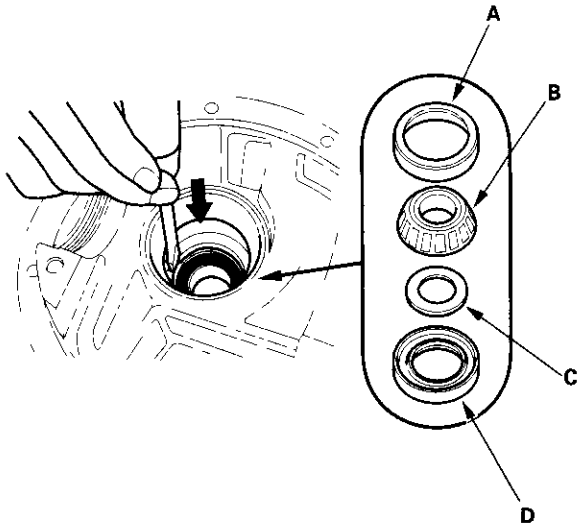


12. Remove the bearing outer race from the differential carrier housing.

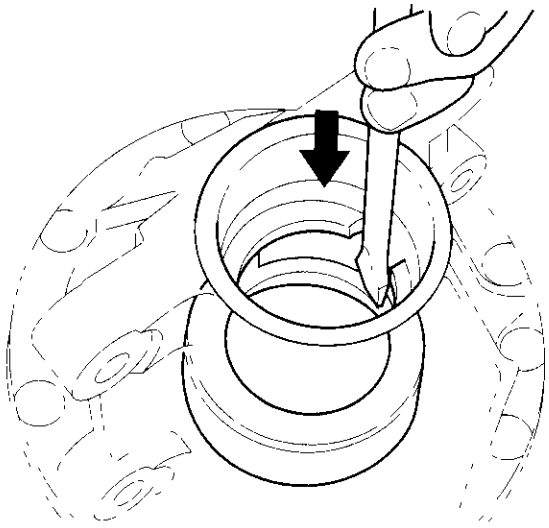

13. Remove the tapered roller bearing (A) and thrust washer (B) from the drive pinion (C) using a commercially available bearing separator and a press as shown.

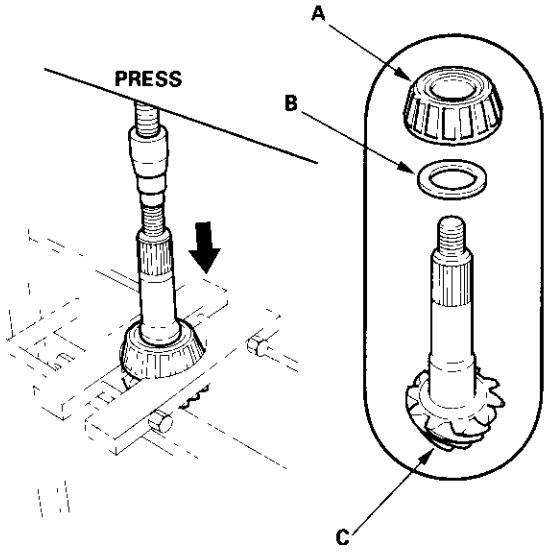


14. Remove the tapered roller bearings from the Torsen LSD assembly using a commercially available bearing puller as shown.

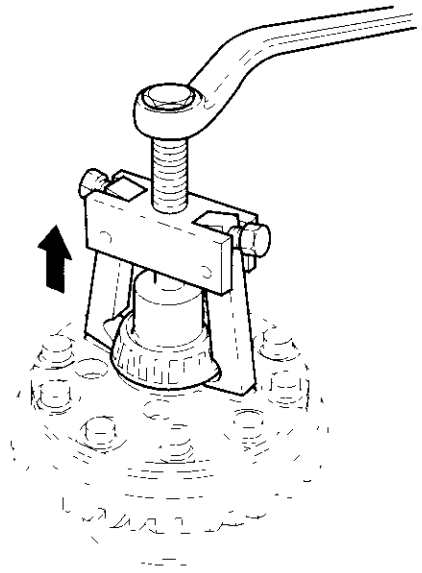

15. Remove the ten mounting bolts in a crisscross pattern in several steps, then remove the ring gear.

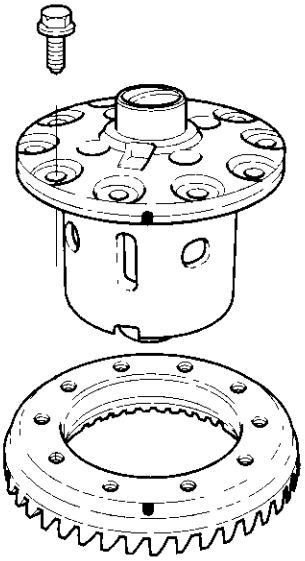

16. Remove the breather plate (A), filler plug (B), drain plug (C), and sealing washers.

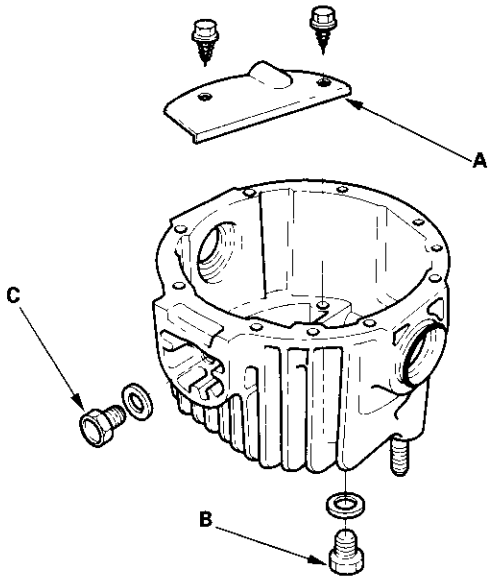


(cont'd)

## Differential Disassembly (cont'd)

17. Remove the oil seals.

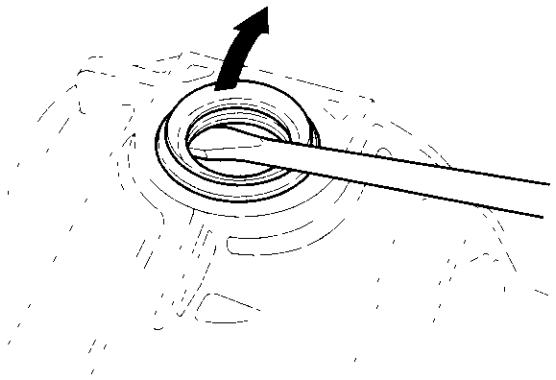

## Differential Reassembly

**Special Tools Required**
- Attachment, 40 x 50 mm I.D. 07LAD-PW50601
- Driver, 40 mm I.D. 07746-0030100
- Attachment, 30 mm I.D. 07746-0030300
- Attachment, 45 x 55 mm I.D. 07MAD-PR90100
- Driver 07749-0010000
- Attachment, 78 x 80 mm 07NAD-PX40100
- Flange holder 07RAB-TB4010B
- Holder handle 07JAB-001020A
- Universal holder 07725-0030000
- Oil seal driver 07JAD-PL90100

1. Apply Hondalock 1 (P/N 08713-0001) to the surface of the ring gear and 10 mounting bolts.

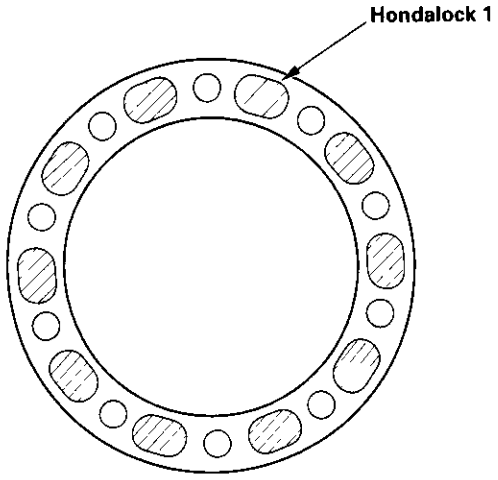


2. Install the ring gear, then tighten the 10 mounting bolts in a crisscross pattern in several steps.

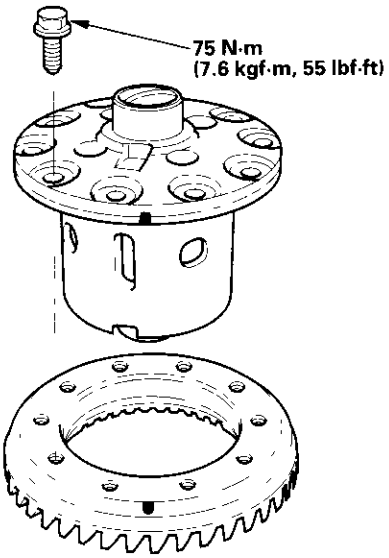

3. Install the tapered roller bearing using the special tools and a press as shown.

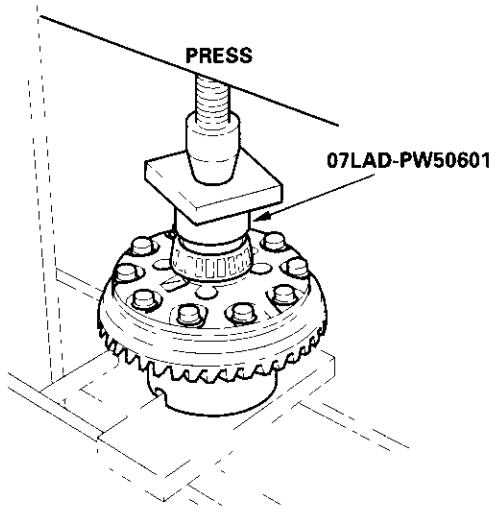


4. Install the standard thrust washer 3.47 mm (0.1366 in.) (A) onto the drive pinion (B). Then install the tapered roller bearing (C) using the old pinion spacer (D) and special tools as shown.

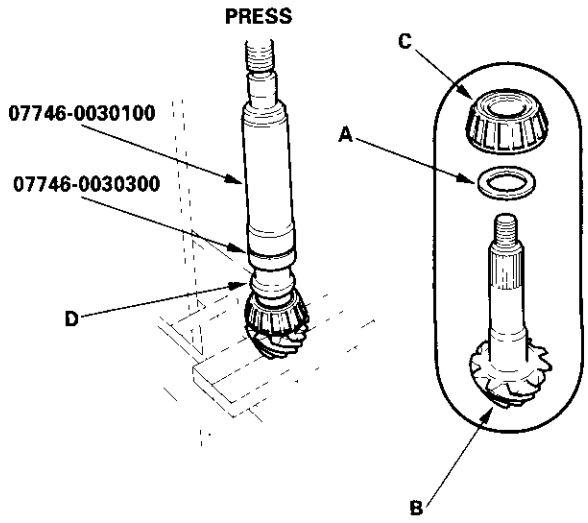


5. Install the bearing outer races (A) into the differential carrier housing using the special tools as shown.

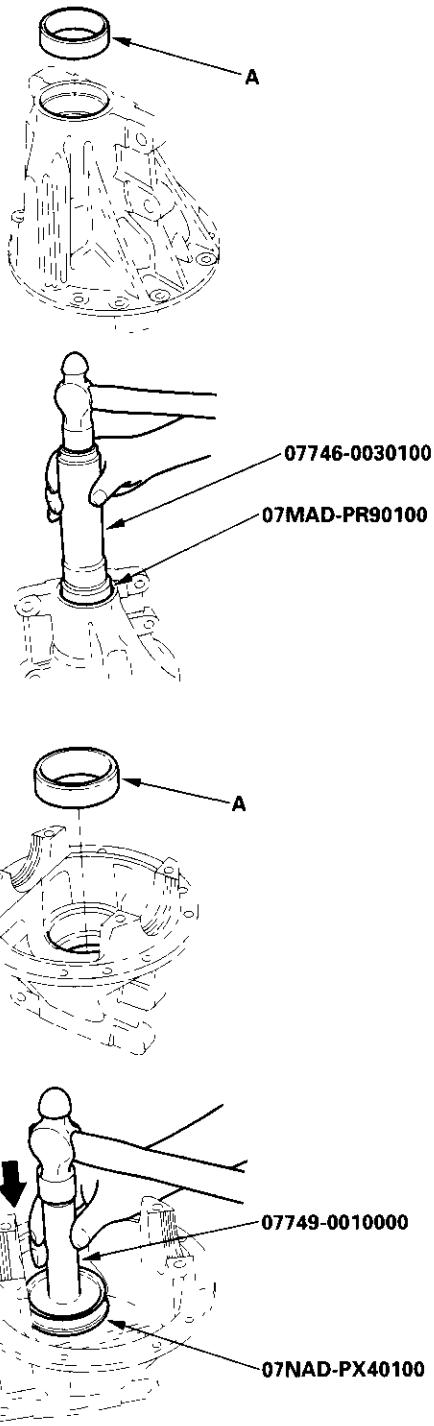


(cont'd)

## Differential Reassembly (cont'd)

6. Apply lubricant to the tapered roller bearing, then install the drive pinion and pinion spacer into the differential carrier housing.

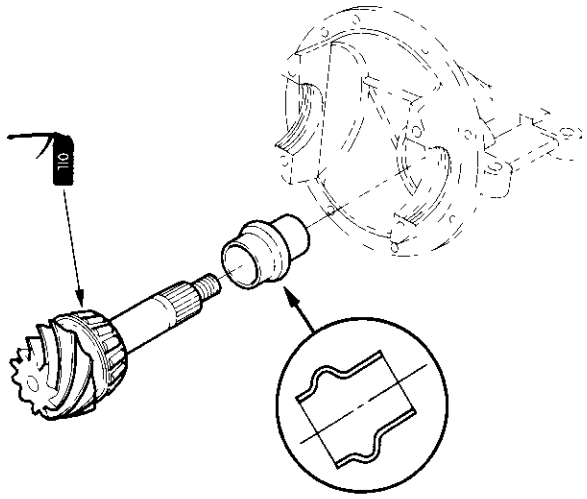


7. Apply lubricant to the tapered roller bearing, then install the tapered roller bearing and thrust washer (A) using the special tools while holding the drive pinion (B).

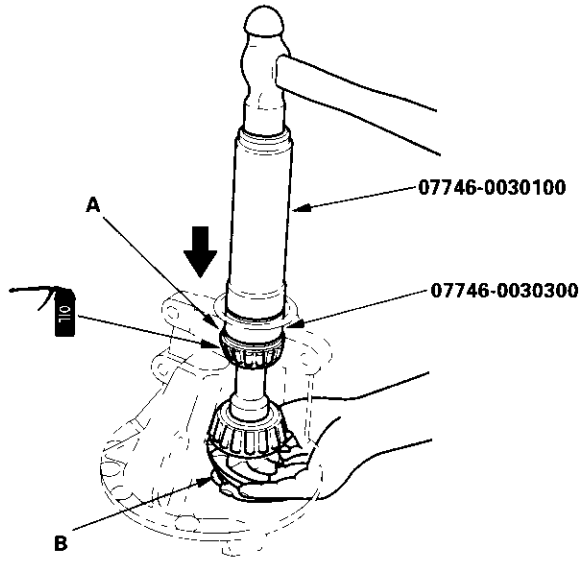


8. Install the oil seal using the companion flange and special tool as shown.

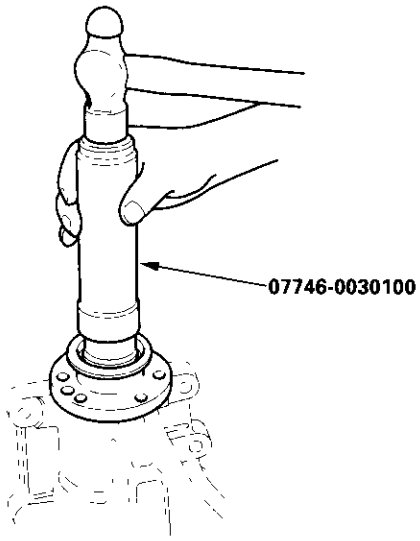


9. Apply molybdenum grease to the surface end of the companion flange, then install the companion flange, drive pinion washer, and locknut.

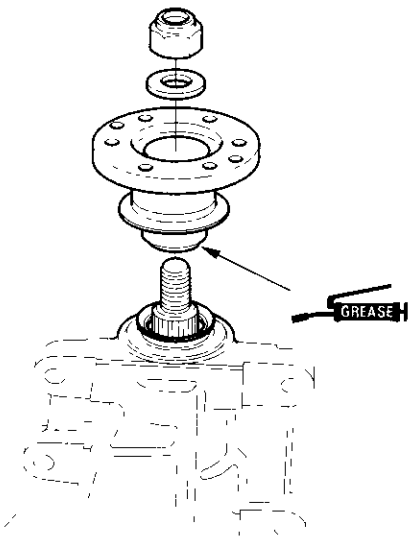

10. Install the special tool to the companion flange, then tighten the locknut to 20 N·m (2.0 kgf·m, 14 lbf·ft).

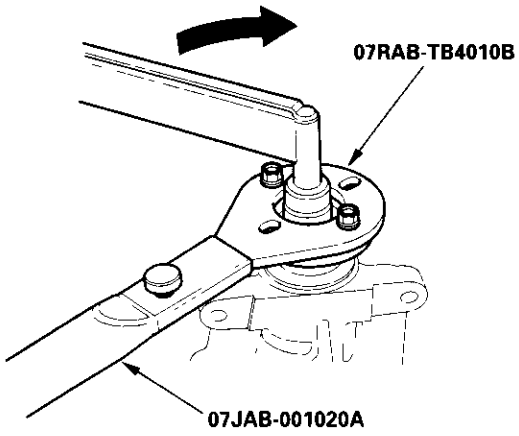


11. Rotate the drive pinion several times to assure proper tapered roller bearing contact. Measure the drive pinion turning torque.

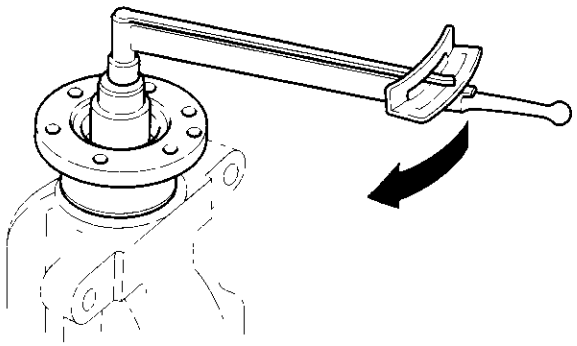

12. Tighten the locknut to 127 N·m (13.0 kgf·m, 94 lbf·ft), then remove the special tool.

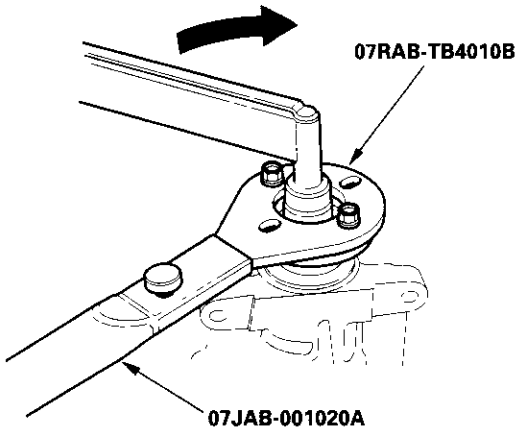


13. Rotate the drive pinion several times to assure proper tapered roller bearing contact. Measure the drive pinion turning torque.

- If the drive pinion turning torque exceeds the standard, replace the distance piece.
- If the drive pinion turning torque less than the standard, adjust by tightening the locknut a little at a time, but keep the torque within 127 – 284 N·m (13.0 – 29.0 kgf·m, 94 – 210 lbf·ft). If this is not possible, replace the pinion spacer.

**Turning Torque:**
**0.88 – 1.37 N·m (9.0 – 14.0 kgf·cm, 7.8 – 12.1 lbf·in) + Tp (from step 11)**

Tp: Actual measurement of drive pinion turning torque

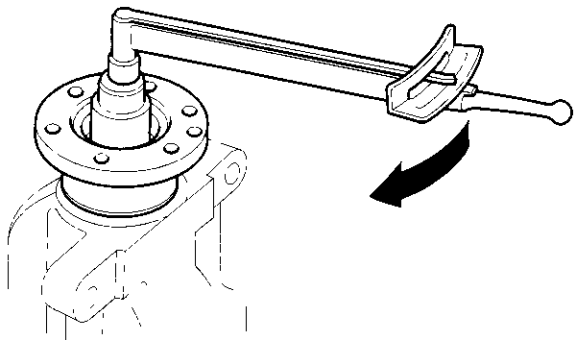

(cont'd)

## Differential Reassembly (cont'd)

14. Install the Torsen LSD assembly (A), bearing outer races (B), adjustment screws (C) onto the differential carrier housing.

    NOTE:
    - Reinstall the adjustment screws in their original position on the differential carrier housing.
    - Align the threads of the adjustment screws and differential carrier housing.

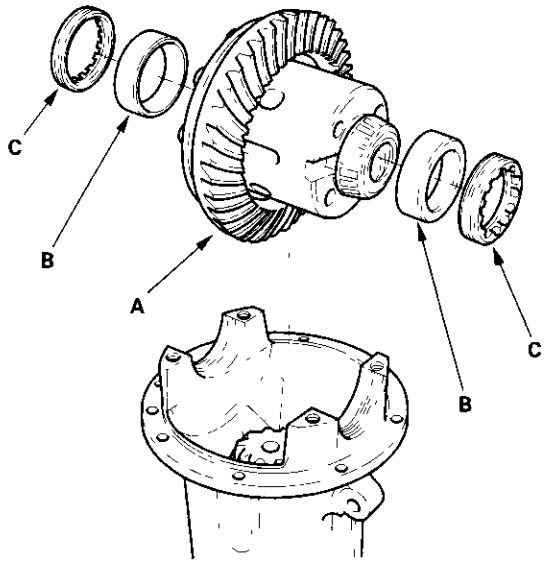


15. Install the bearing caps (A) while aligning both the marks (B) on the threads of the adjustment screws and bearing caps, then install the mounting bolts finger-tight.

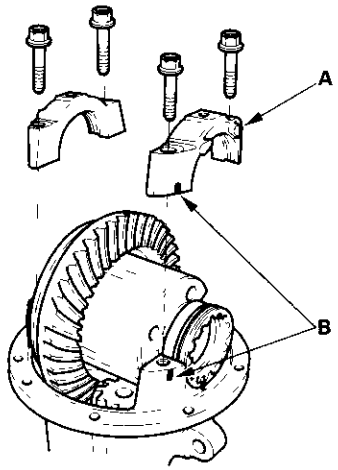


16. Measure the backlash of the ring gear.

    - Set the dial gauge tip at a right angle to the ring gear teeth.
    - Measure four points on the ring gear 90° apart.
    - Backlash will be within the standard if at one point the ring gear backlash is within the standard, minimum measurement of 0.05 mm or above and the difference between the maximum and minimum measurements do not exceed 0.07 mm.
    - Both adjustment screws must be adjusted.

**Backlash:**
**Standerd: 0.09 – 0.11 mm (0.0035 – 0.0043 in.)**
**Minimum: 0.05 mm (0.0020 in.)**
**Difference range: 0.07 mm (0.0028 in.)**

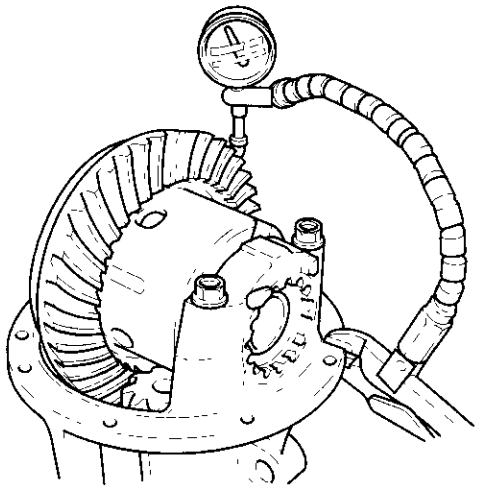

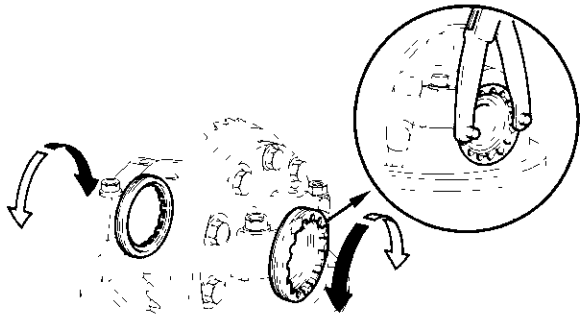

17. Tighten the bearing cap mounting bolts.

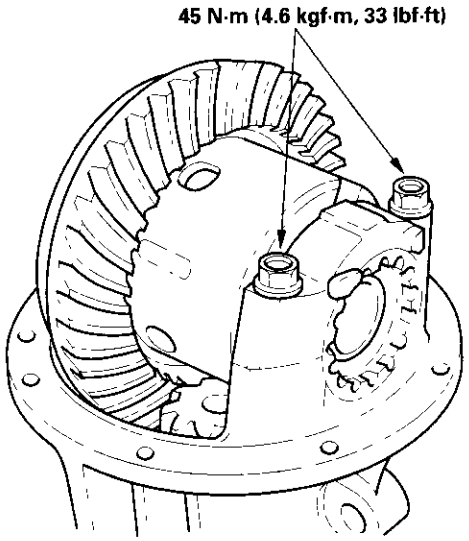


18. Thoroughly clean the ring gear and drive pinion teeth, and paint the ring gear teeth with Prussian Blue lightly and evenly.

19. Rotate the pinion three full turns in the forward and reverse directions to produce a contact pattern on the ring gear. During this operation resistance should be applied to the ring gear.

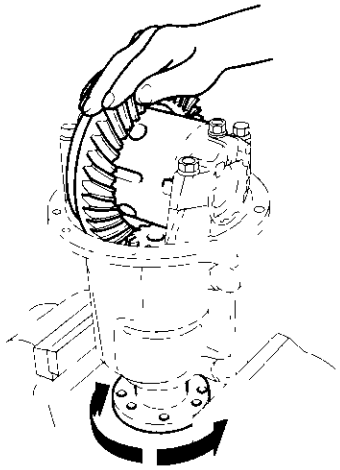

20. Check the tooth contact, and adjust it if needed.

- Toe Contact: Use a thinner thrust washer to move the drive pinion away from the ring gear.
- Heel Contact: Use a thicker thrust washer to move the drive pinion toward from the ring gear.
- Flank Contact: To move the ring gear away from the drive pinion, tighten the adjustment screw on the drive pinion side and loosen the adjustment screw on the ring gear side. Recheck backlash after adjusting the adjustment screws. If out of specification, adjust as described under Toe Contact.
- Face Contact: To move the ring gear toward the drive pinion, tighten the adjustment screw on the ring gear side and loosen the adjustment screw on the drive pinion side. Recheck backlash after adjusting the adjustment screws. If out of specification, adjust as described under Heel Contact.

**Correct Tooth Contact**



**Toe Contact**

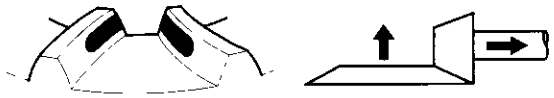

(cont'd)

## Differential Reassembly (cont'd)

**Heel Contact**

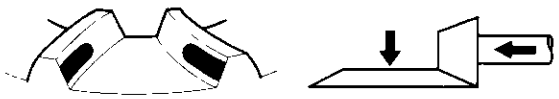

**Flank Contact**

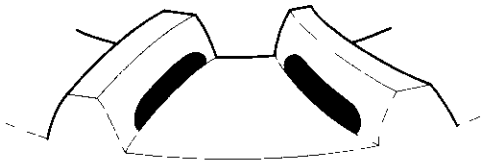

**Face Contact**

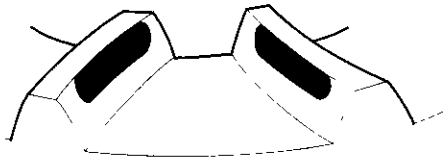

**Thrust Washer**

| | Part Number | Thickness |
|---|---|---|
| A | 41361-PCZ-003 | 3.08 mm (0.1213 in.) |
| B | 41362-PCZ-003 | 3.11 mm (0.1224 in.) |
| C | 41363-PCZ-003 | 3.14 mm (0.1236 in.) |
| D | 41364-PCZ-003 | 3.17 mm (0.1248 in.) |
| E | 41365-PCZ-003 | 3.20 mm (0.1260 in.) |
| F | 41366-PCZ-003 | 3.23 mm (0.1272 in.) |
| G | 41367-PCZ-003 | 3.26 mm (0.1283 in.) |
| H | 41368-PCZ-003 | 3.29 mm (0.1295 in.) |
| I | 41369-PCZ-003 | 3.32 mm (0.1307 in.) |
| J | 41370-PCZ-003 | 3.35 mm (0.1319 in.) |
| K | 41371-PCZ-003 | 3.38 mm (0.1331 in.) |
| L | 41372-PCZ-003 | 3.41 mm (0.1343 in.) |
| M | 41373-PCZ-003 | 3.44 mm (0.1354 in.) |
| N*1 | 41374-PCZ-003 | 3.47 mm (0.1366 in.) |
| O | 41375-PCZ-003 | 3.095 mm (0.1219 in.) |
| P | 41376-PCZ-003 | 3.125 mm (0.1230 in.) |
| Q | 41377-PCZ-003 | 3.155 mm (0.1242 in.) |
| R | 41378-PCZ-003 | 3.185 mm (0.1254 in.) |
| S | 41379-PCZ-003 | 3.215 mm (0.1266 in.) |
| T | 41380-PCZ-003 | 3.245 mm (0.1278 in.) |
| AA | 41381-PCZ-003 | 3.275 mm (0.1289 in.) |
| AO | 41382-PCZ-003 | 3.305 mm (0.1301 in.) |
| AP | 41383-PCZ-003 | 3.335 mm (0.1313 in.) |
| AQ | 41384-PCZ-003 | 3.365 mm (0.1325 in.) |
| AR | 41385-PCZ-003 | 3.395 mm (0.1337 in.) |
| AS | 41386-PCZ-003 | 3.425 mm (0.1348 in.) |
| AT | 41387-PCZ-003 | 3.455 mm (0.1360 in.) |

N*1: Standard

21. Rotate the Torsen LSD assembly several times to assure proper tapered roller bearing contact. Measure the Torsen LSD assembly preload using the push/pull gauge.

    - If the Torsen LSD assembly preload exceeds the standard, adjust by loosening the adjustment screws a notch at a time.
    - If the Torsen LSD assembly preload is less than the standard, adjust by tightening the adjustment screws a notch at a time.

    **Standard: 14–30 N (1.4–3.1 kgf, 3.1–6.8 lbf)**

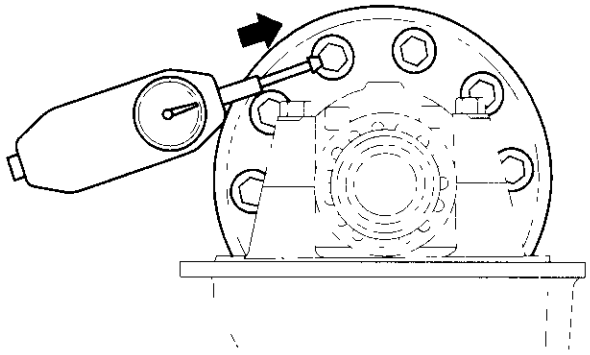

22. Install the lock plates (A).

**22 N·m (2.2 kgf·m, 16 lbf·ft)**

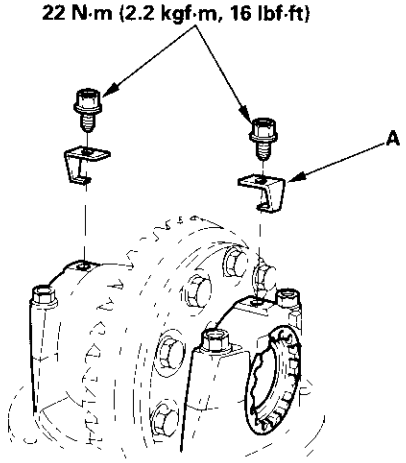

23. Install the oil seal using the special tools as shown.

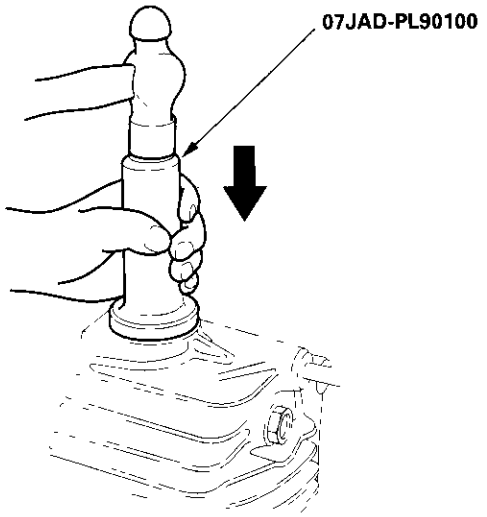


24. Install the breather plate (A), filler plug (B), drain plug (C), and sealing washers.

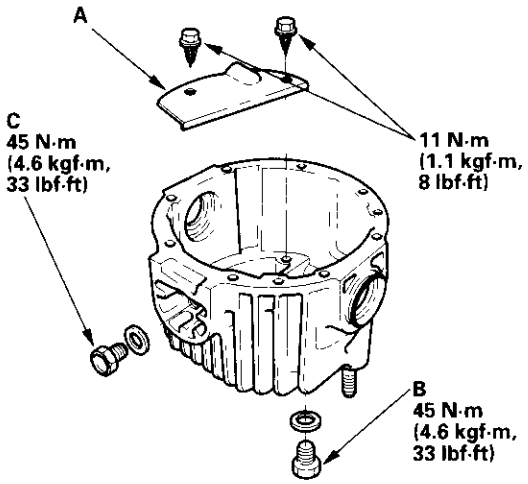


25. Remove the dirty oil from the differential case sealing surface. Apply liquid gasket (P/N 08718-0001) to the sealing surface.
Be sure to seal the entire circumference of the bolt holes to prevent oil leakage.

NOTE:
- If 5 minutes have passed after applying liquid gasket, reapply it and assemble the housings.
- Allow it to cure at least 20 minutes after assembly before filling the differential with oil.

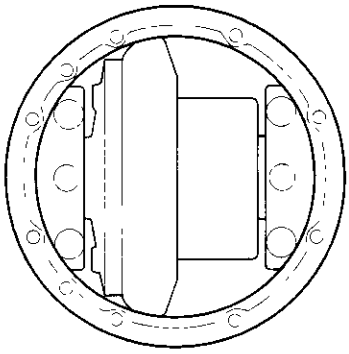

—·— · Liquid gasket

26. Install the differential case assembly.

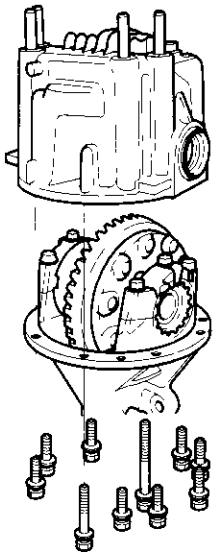

(cont'd)

## Differential Reassembly (cont'd)

27. Tighten the 10 mounting bolts in a crisscross pattern in several steps.

    **24 N·m (2.4 kgf·m, 17 lbf·ft)**

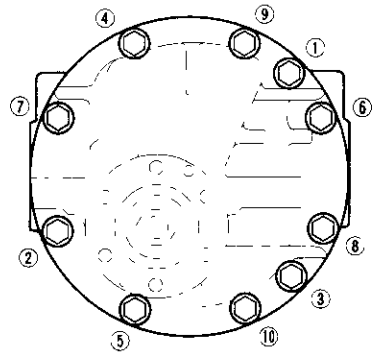


28. Install the clips (A) on the output shafts, then install the output shafts (B).

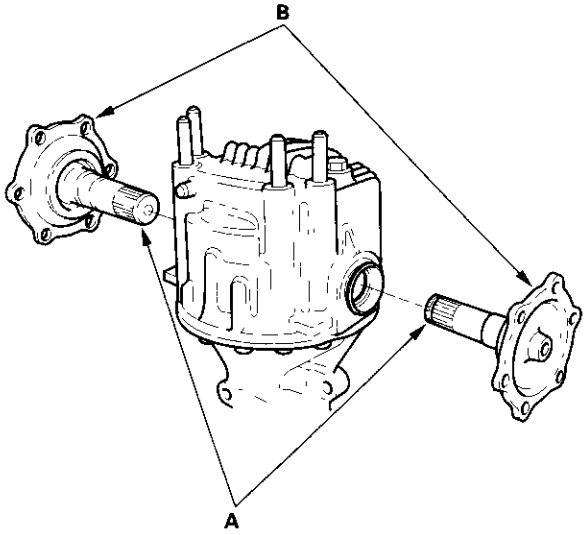


## Differential Installation

1. Install the right and left differential mount bracket A to the rear differential (see page 15-29).

2. Place the rear differential on the floor jack, and raise it to the mounting level.

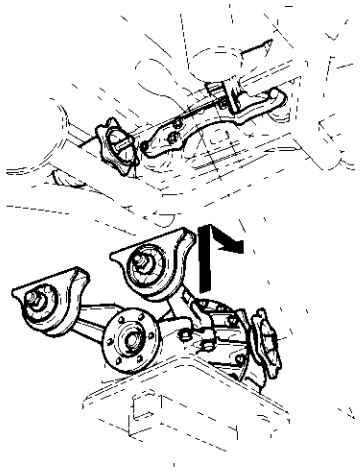

3. Install the four differential mount bracket B mounting nuts.

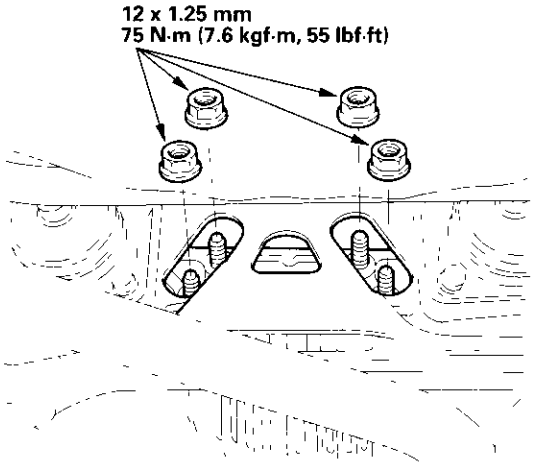

4. Install the right and left differential mount bracket A mounting bolts.

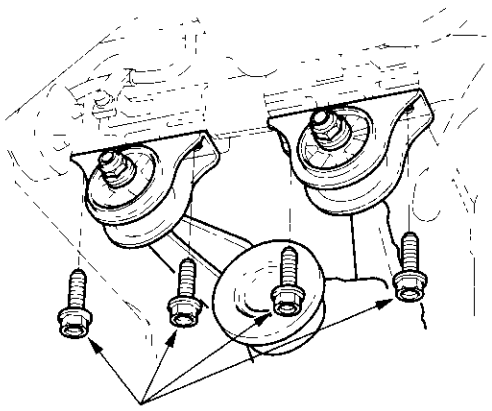


5. Install the canister cover.

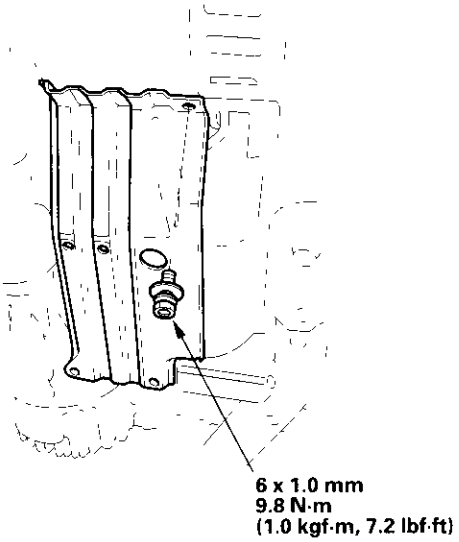


6. Install the rear suspension stiffener.

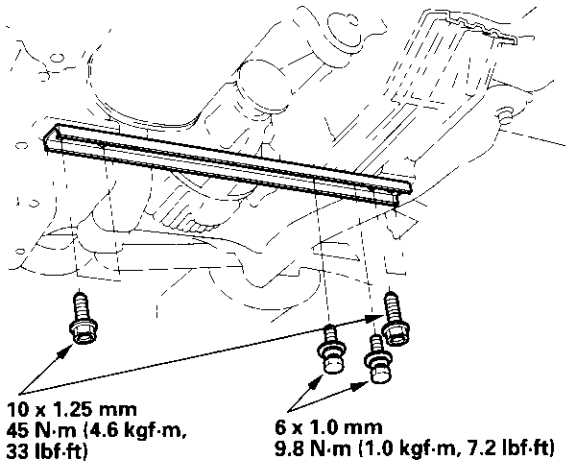


7. Install the inboard joints (A) onto the rear differential by aligning the reference marks (B).

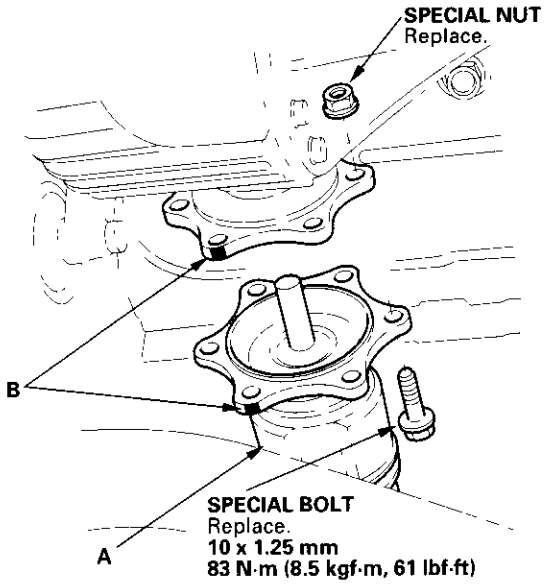


(cont'd)

## Differential Installation (cont'd)

8. Install the ball joints onto the lower arms (A), then install the castle nuts (B) and new cotter pins.

   NOTE: Make sure the ball joint boot is not damage or cracks.

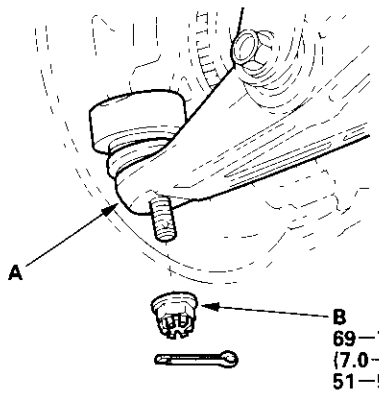


9. Install the ABS sensor harness onto the upper arm.

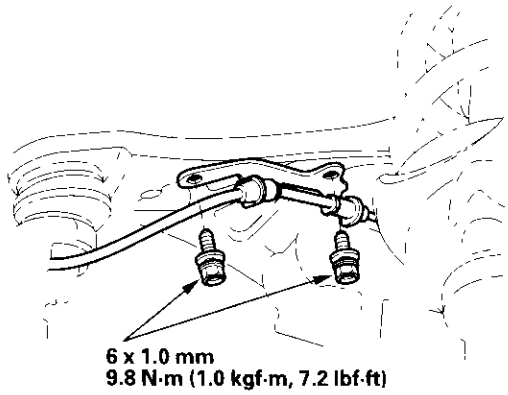


10. Install the propeller shaft to the transmission and the rear differential by aligning the reference marks (see page 16-18).

## Differential Mount Replacement

NOTE: If the installing the rear differential and mount assembles, tighten the differential mount bracket B mounting nuts first, then the differential mount bracket A mounting bolts.

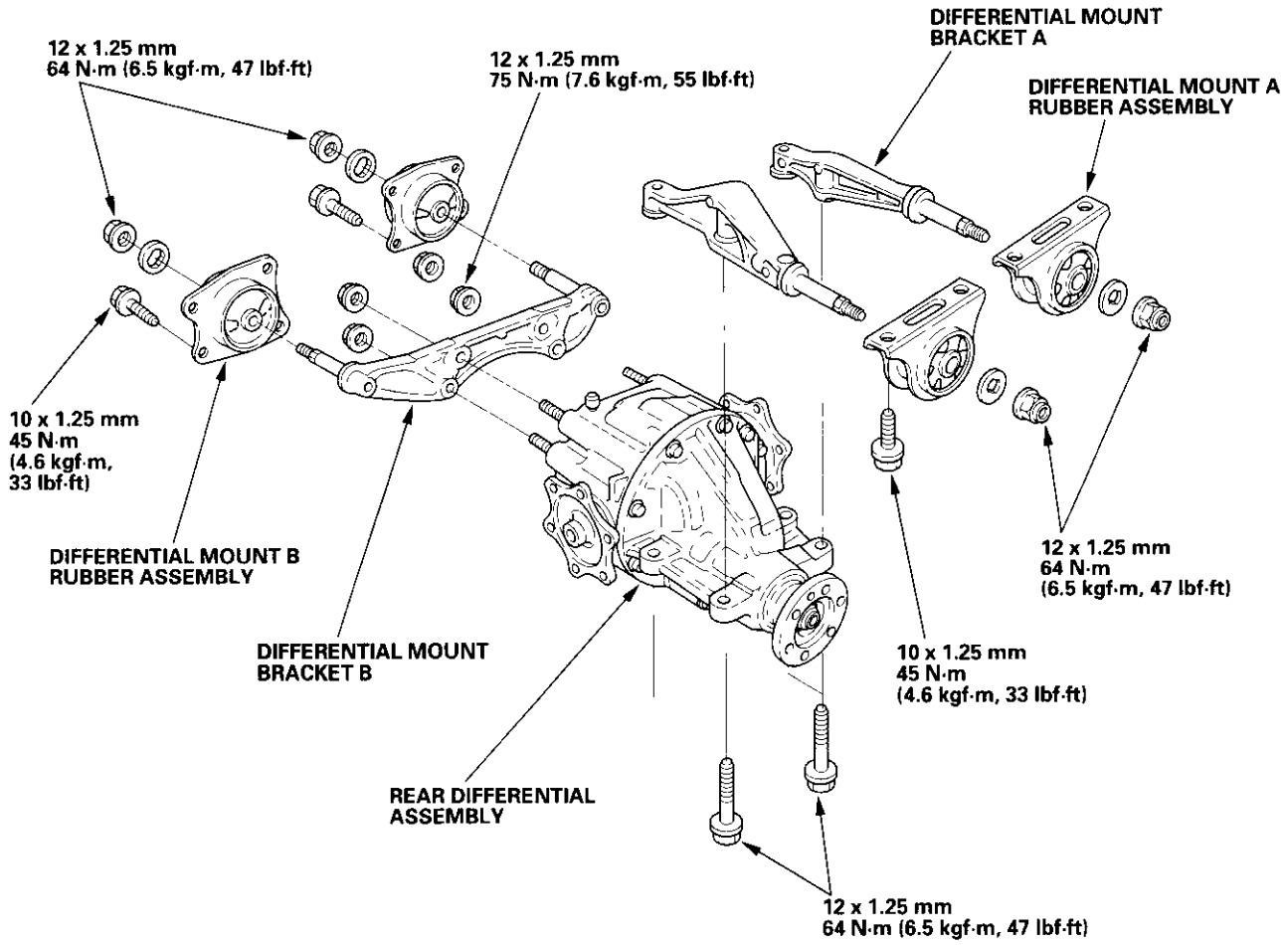

# Transaxle

## Driveline/Axle


Special Tools ..... 16-2
Driveshaft Inspection ..... 16-3
Driveshafts Removal ..... 16-3
Driveshafts Disassembly ..... 16-5
Driveshafts Reassembly ..... 16-8
Driveshafts Installation ..... 16-15
Propeller Shaft Inspection ..... 16-16
Propeller Shaft Removal ..... 16-17
Propeller Shaft Installation ..... 16-18




## Special Tools

| Ref. No. | Tool Number | Description | Qty |
|---|---|---|---|
| ① | 07MAC-SL00200 | Ball Joint Remover, 28 mm | 1 |
| ② | 07XAC-001020A | Threaded Adapter, 24 x 1.5 mm | 1 |

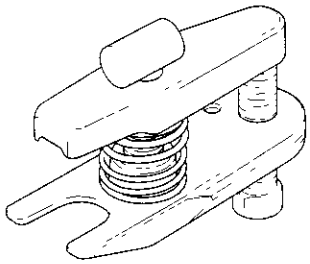

①

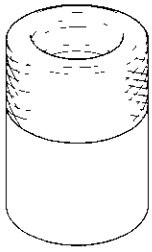

②

## Driveshaft Inspection

1. Check the inboard boot (A) and outboard boot (B) on the driveshaft (C) for cracks, damage, leaking grease, and loose boot bands (D). If any damage is found, replace the boot and boot bands.

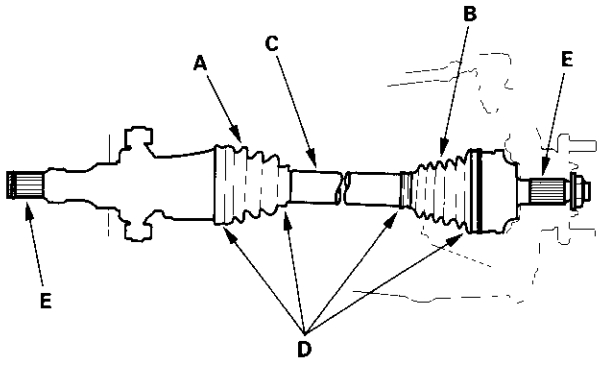


2. Turn the driveshaft by hand, and make sure the splines (E) and joint are not excessively loose.

3. Make sure the driveshaft is not twisted or cracked; if it is, replace it.

## Driveshafts Removal

**Special Tools Required**
Ball joint remover, 28 mm 07MAC-SL00200

1. Loosen the wheel nuts slightly.

2. Raise the rear of the vehicle, and support it with safety stands in the proper locations (see page 1-13).

3. Remove the wheel nuts and rear wheels.

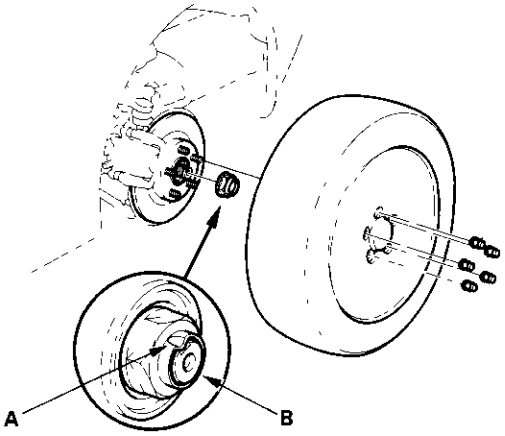


4. Lift up the locking tab (A) on the spindle nuts (B), then remove the nut.

5. Remove the cotter pin (A) from the lower arm ball joint castle nut (B), and remove the nut.

NOTE:
- To avoid damaging the ball joint, install a hex nut on to the threads of the ball joint.
- Be careful not to damage the ball joint boot when installing the remover.

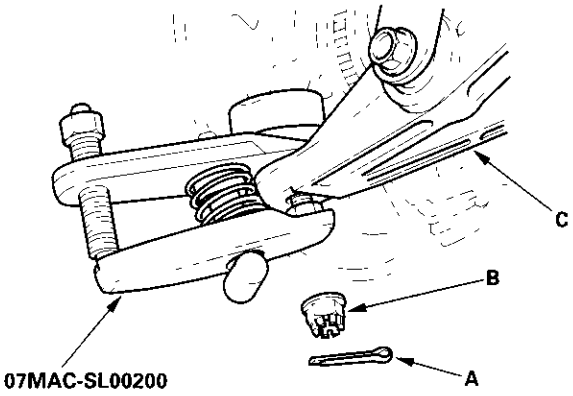


6. Separate the ball joint from the lower arm (C) with the special tool (see page 18-10).

(cont'd)

## Driveshafts Removal (cont'd)

7. Remove the ABS sensor harness (A) from the upper arm.

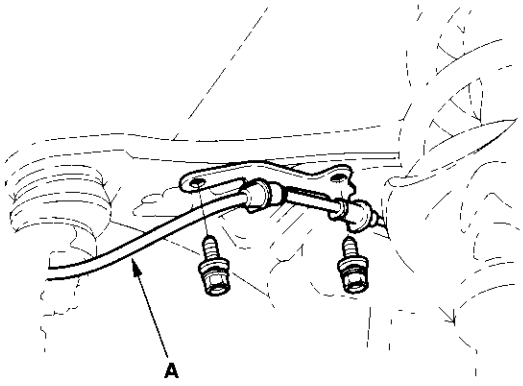


8. Make reference marks (A) across the inboard joint (B) and the rear differential (C).

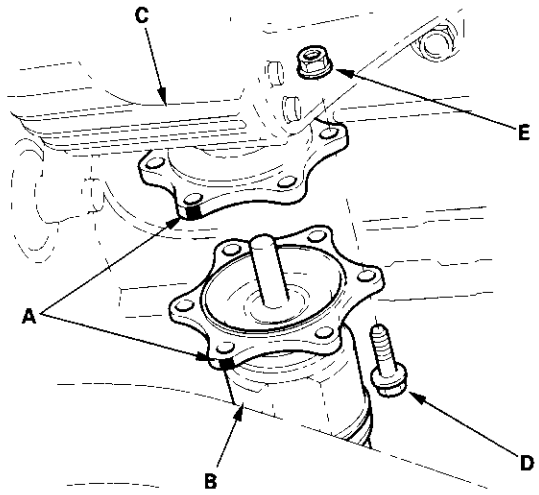


9. Remove the six inboard joint mounting bolts (D) and nuts (E), then remove the inboard joint from the rear differential.

10. Pull the knuckle outward, and remove the inboard joint from the rear differential.

11. Pull the knuckle outward, and remove the driveshaft outboard joint from the wheel hub using a plastic hammer.

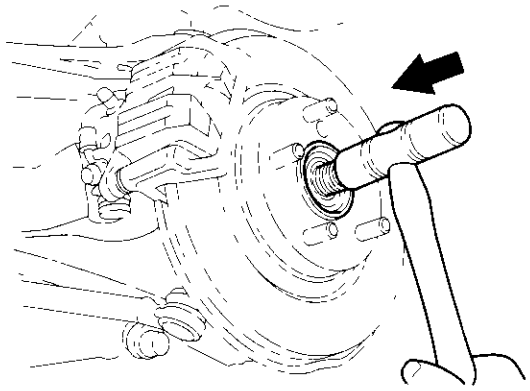

12. Remove the driveshaft.

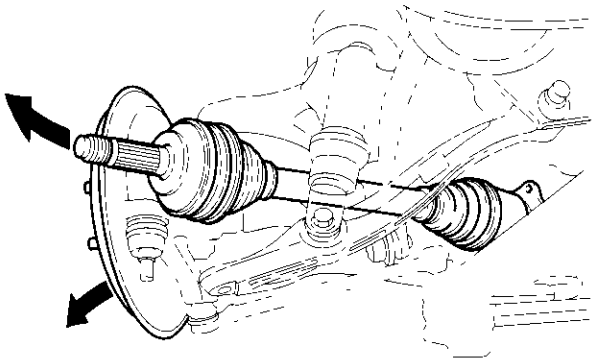

# Driveshafts Disassembly

**Special Tools Required**
- Threaded adapter, 24 x 1.5 mm 07XAC-001020A
- Slide hammer, commercially available

## Inboard Joint Side:

1. Remove the boot bands. Be careful not to damage the boot.

   - If the boot band is a double loop type (A), lift up the band bend (B), and push it into the clip (C).
   - If the boot band is a low profile type (D), pinch the boot band using a commercially available boot band pincers (E).

**Double Loop Type**

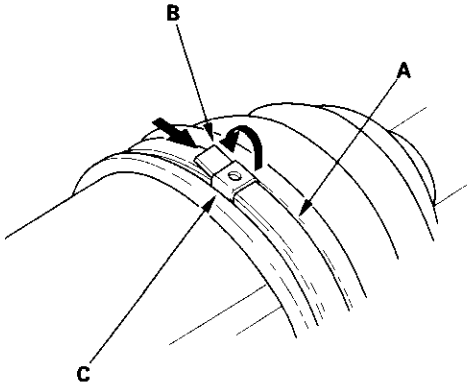


**Low Profile Type**

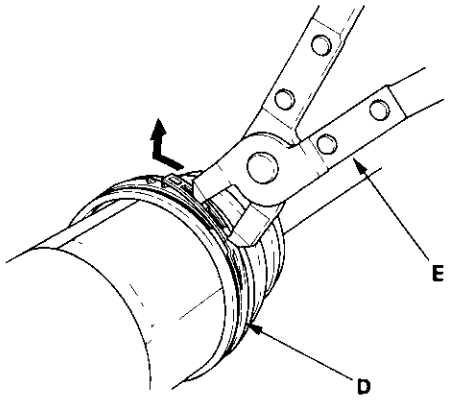


2. Make a mark (A) on each roller (B) and inboard joint (C) to identify the locations of rollers and grooves in the inboard joint. Then remove the inboard joint on the shop towel (D). Be careful not to drop the rollers when separating them from the inboard joint.

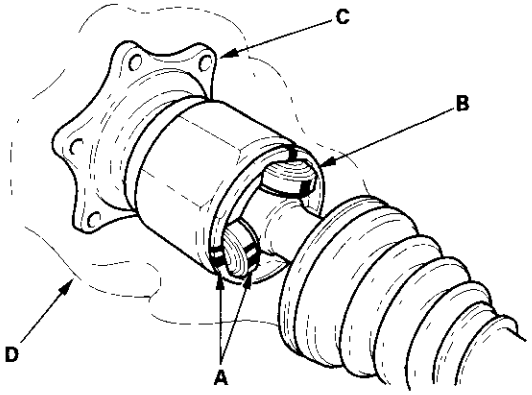


3. Make a mark (A) on the rollers (B) and spider (C) to identify the locations of rollers on the spider, then remove the rollers.

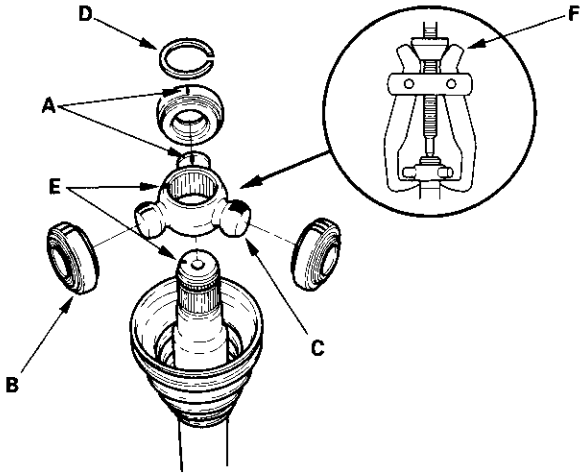


4. Remove the circlip (D).

5. Make a mark (E) on the spider and driveshaft to identify the position of the spider on the shaft.

6. Remove the spider using a commercially available bearing remover (F).

(cont'd)

## Driveshafts Disassembly (cont'd)

7. Wrap the splines on the driveshaft with vinyl tape (A) to prevent damage to the boot.

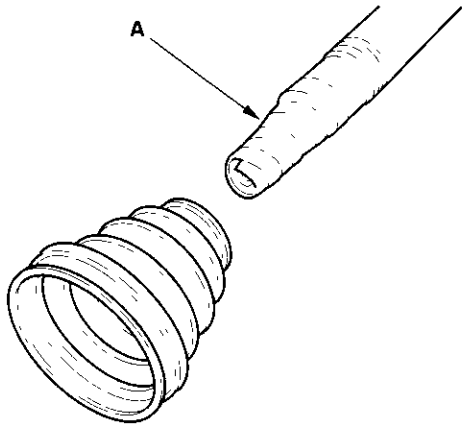


8. Remove the inboard boot. Be careful not to damage the boot.
9. Remove the vinyl tape.

### Outboard Joint Side:

1. Pry up the three tabs (A) with a screwdriver, then lift up the end of the band. Be careful not to damage the boot.

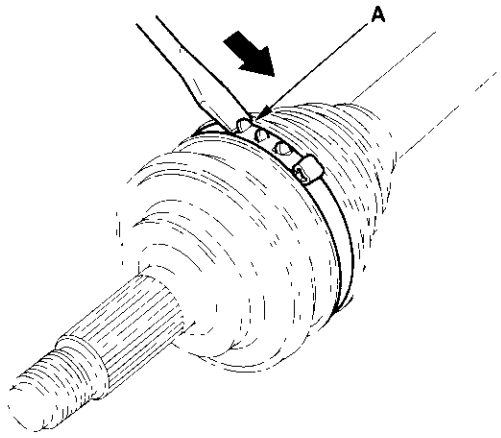


2. Slide the outboard boot to the inboard joint side. Be careful not to damage the boot.

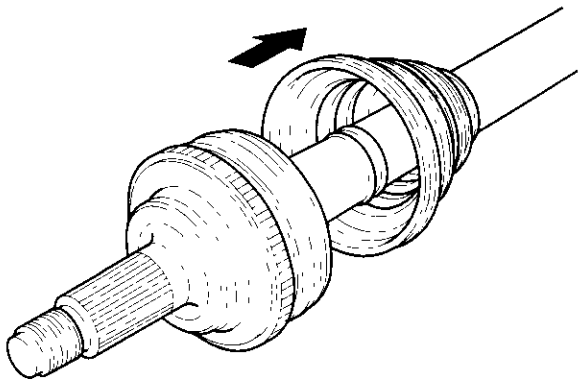

3. Wipe off the grease to expose the driveshaft and the outboard joint inner race.

4. Make a mark (A) on the driveshaft (B) at the same position of the outboard joint end (C).

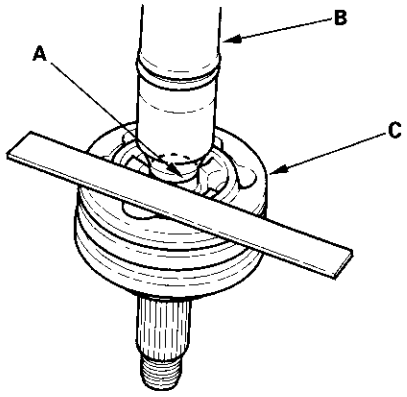


5. Carefully clamp the driveshaft in a vise.

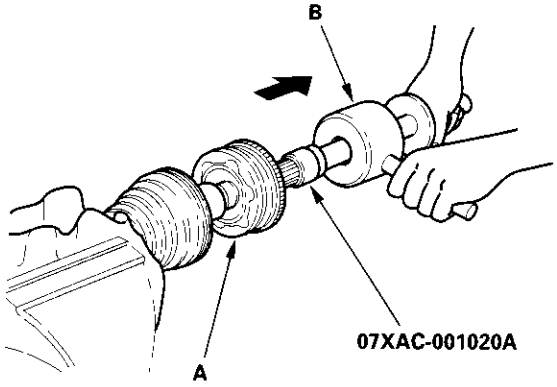


6. Remove the outboard joint (A) using the special tool and a commercially available 5/8" x 18 slide hammer (B).

7. Remove the driveshaft from the vise.

8. Remove the stop ring from the driveshaft.

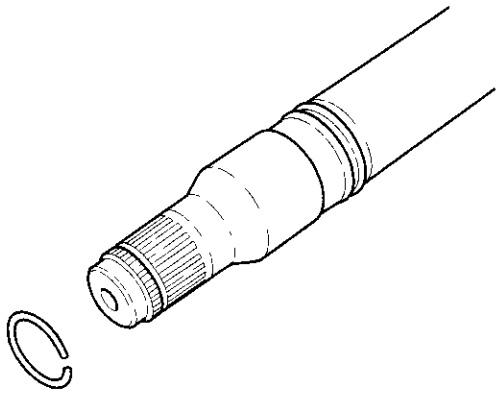

9. Wrap the splines on the driveshaft with vinyl tape (A) to prevent damage to the boot.

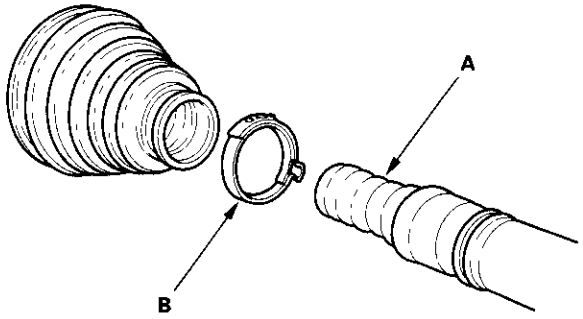


10. Remove the outboard boot and boot band (B). Be careful not to damage the boot.

11. Remove the vinyl tape.

## Driveshafts Reassembly

### Exploded View

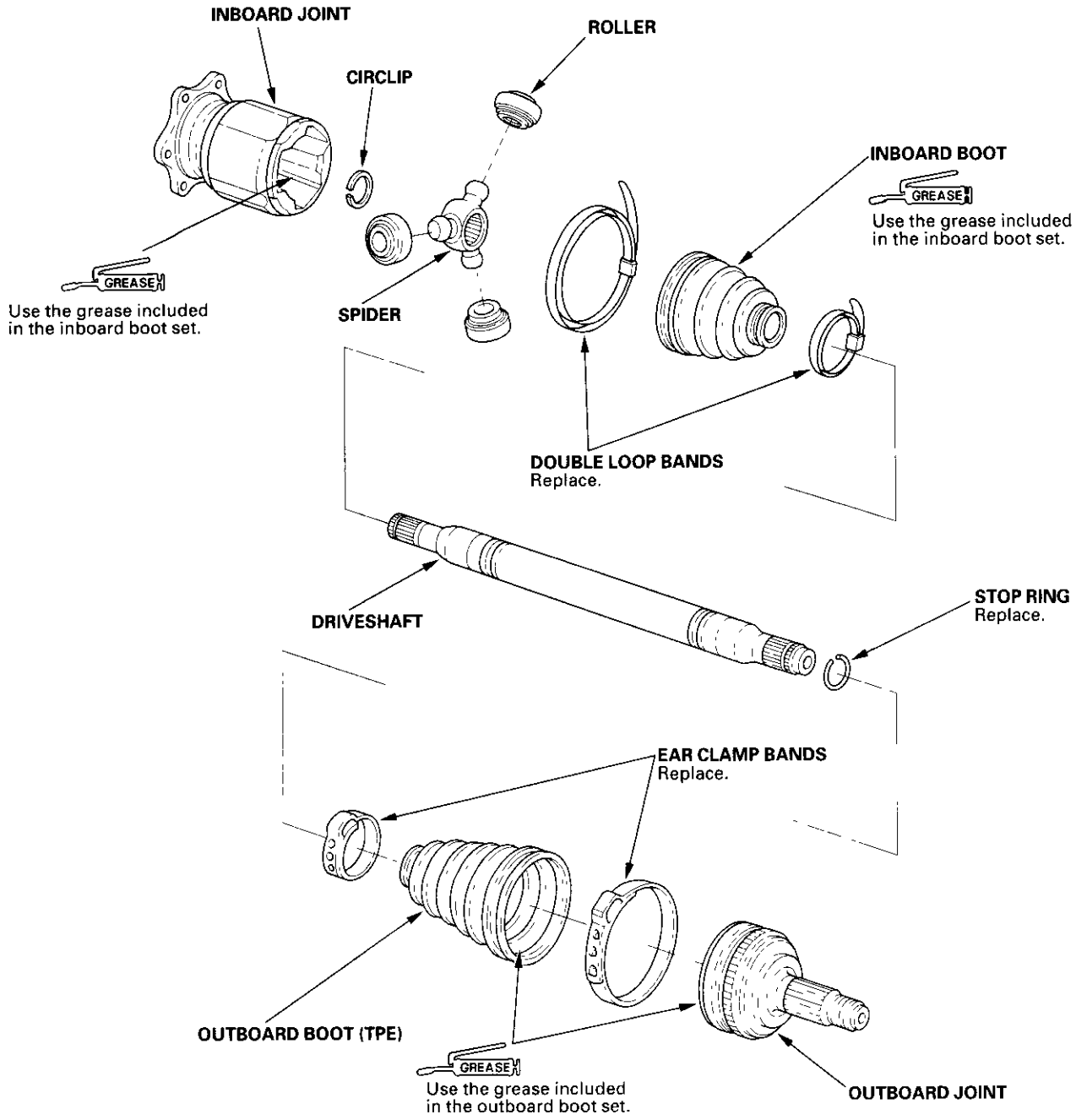

**Special Tools Required**
- Boot band tool, KD-3191 or equivalent, commercially available
- Boot band pincers, Kent-Moore J-35910 or equivalent, commercially available

NOTE: Refer to the Exploded View as needed during this procedure.

## Inboard Joint Side:

1. Wrap the splines with vinyl tape (A) to prevent damage to the inboard boot.

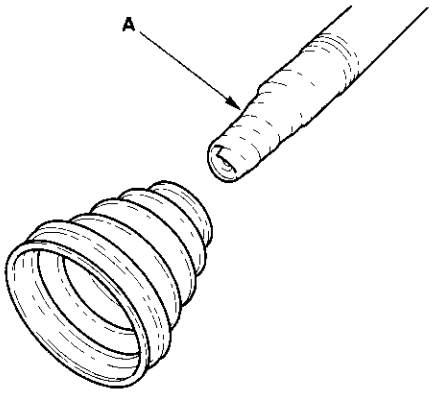


2. Install the inboard boot to the driveshaft, then remove the vinyl tape. Be careful not to damage the inboard boot.

3. Install the spider (A) onto the driveshaft (B) by aligning the marks (C) on the spider and the end of the driveshaft.

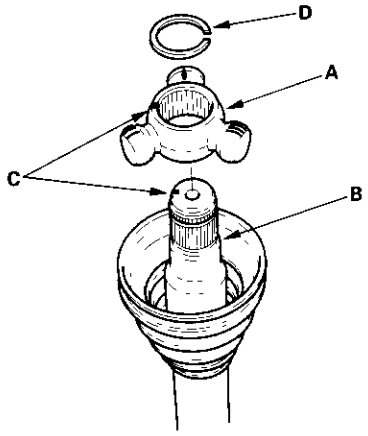


4. Fit the circlip (D) into the driveshaft groove. Always rotate the circlip in its groove to make sure it is fully seated.

5. Fit the rollers (A) onto the spider (B) as shown, and note these items;

   - Reinstall the rollers in their original positions on the spider by aligning the marks (C).
   - Hold the driveshaft pointed up to prevent the rollers from falling off.

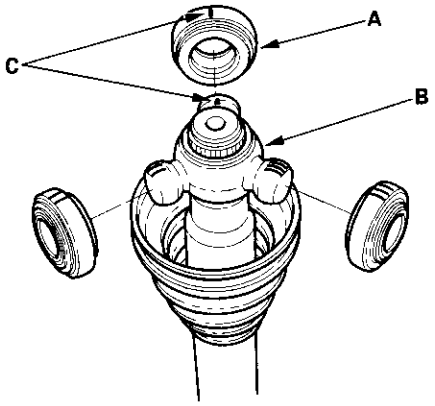


6. Pack the inboard joint with the joint grease included in the new driveshaft set.

**Grease quantity**
**Inboard joint: 150 – 160 g (5.3 – 5.6 oz)**

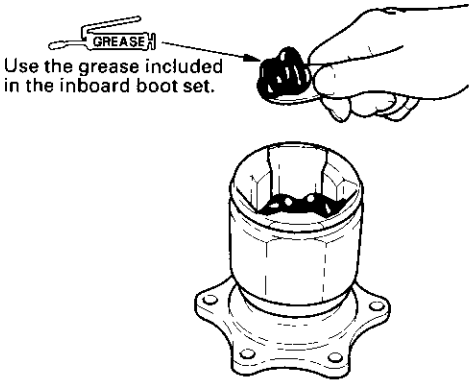


(cont'd)

## Driveshafts Reassembly (cont'd)

7. Fit the inboard joint onto the driveshaft, and note these items:
   - Reinstall the inboard joint onto the driveshaft by aligning the marks (A) on the inboard joint and the rollers.
   - Hold the driveshaft so the inboard joint points up to prevent it from falling off.

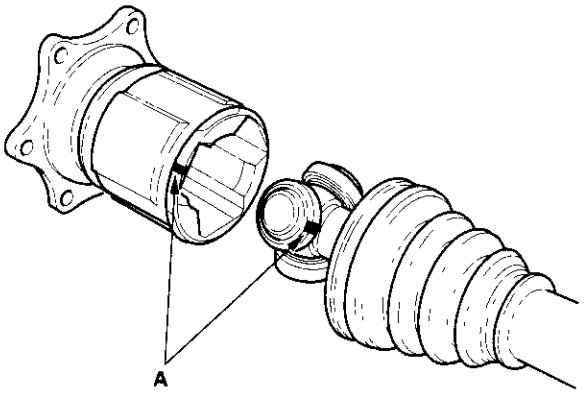


8. Adjust the inboard joint until the rollers are in the middle of the joint.

9. Fit the boot (A) ends onto the driveshaft (B) and the inboard joint (C).

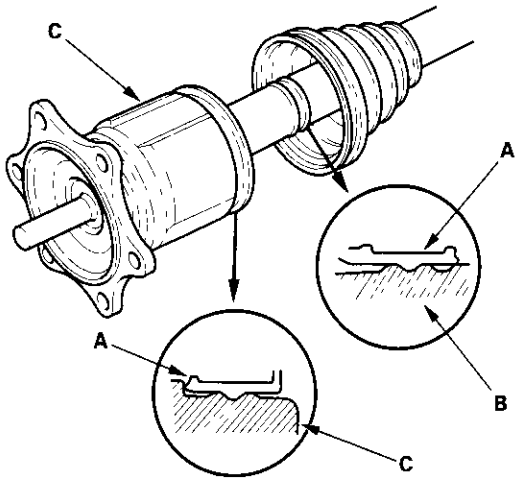


10. Install the boot bands with the band end toward to front of the vehicle.

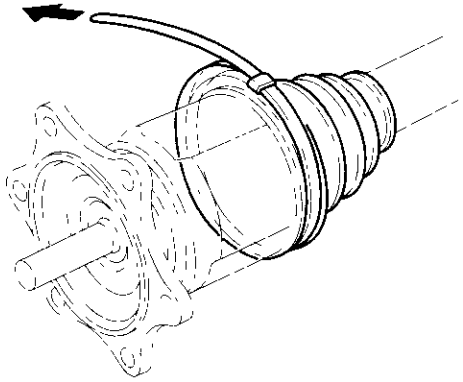

11. Pull up the slack in the band by hand.

12. Mark a position (A) on the band 10—14 mm (0.4—0.6 in.) from the clip (B).

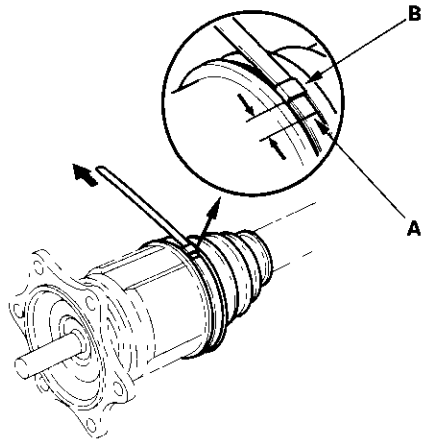

13. Thread the free end of the band through the nose section of the commercially available boot band tool KD-3191 or equivalent (A), and into the slot on the winding mandrel (B).

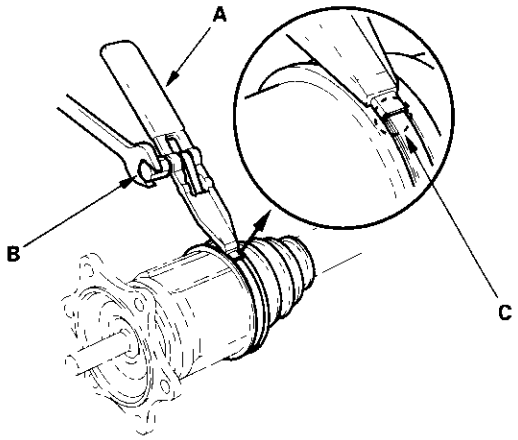


14. Place a wrench on the winding mandrel of the boot band tool, and tighten the band until the marked spot (C) on the band meets the edge of the clip.

15. Lift up the boot band tool to bend the free end of the band 90 degrees to the clip. Center-punch the clip, then fold over the remaining tail onto the clip.

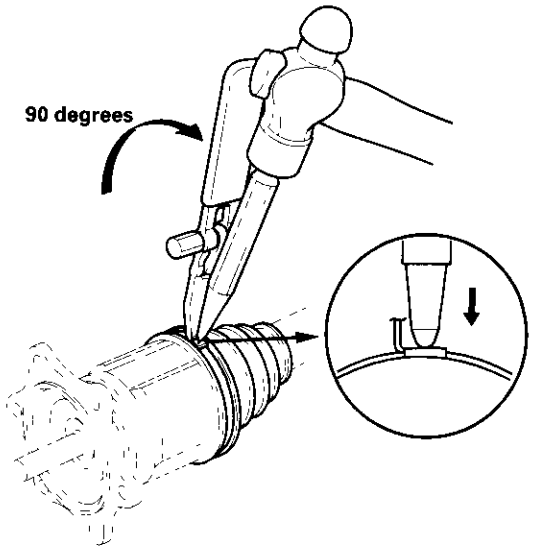


16. Unwind the boot band tool, and cut off the excess free end of the band to leave a 5 – 10 mm (0.2 – 0.4 in.) tail protruding from the clip.

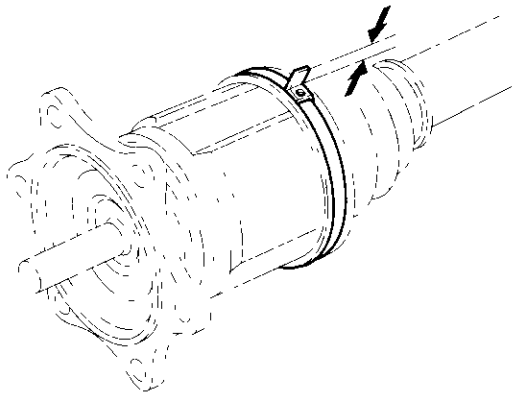

17. Bend the band end (A) by tapping it down with a hammer.

NOTE:
- Make sure the band and clip do not interfere with anything and the band does not move.
- Remove any grease remaining on the surrounding surfaces.

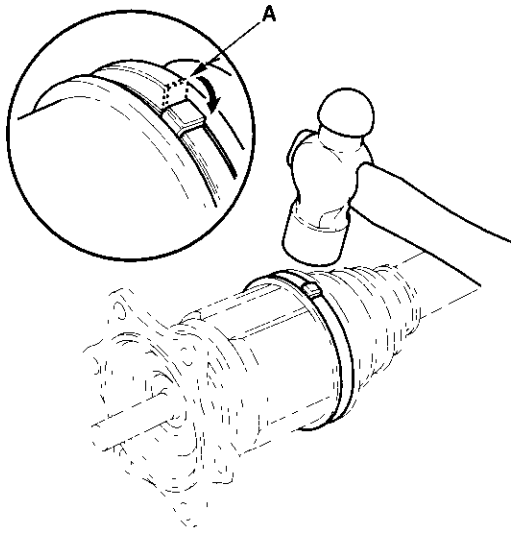


(cont'd)

## Driveshafts Reassembly (cont'd)

### Outboard Joint Side:

1. Wrap the splines on the driveshaft with vinyl tape (A) to prevent damage to the outboard boot.

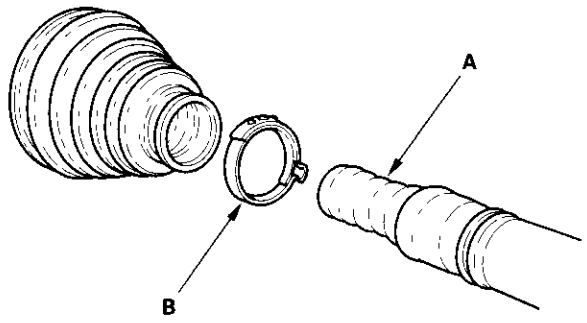


2. Install the new ear clamp band (B) and outboard boot. Be careful not to damage the outboard boot.
3. Remove the vinyl tape.
4. Install the new stop ring into the driveshaft groove (A).

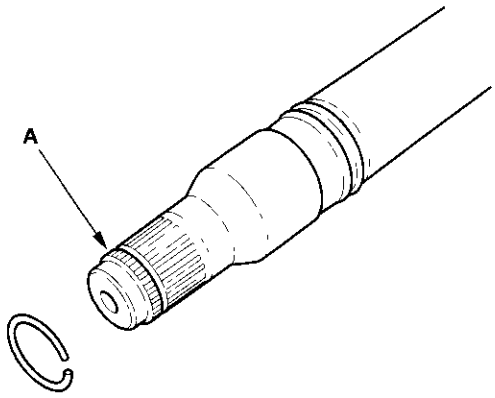


5. Insert the driveshaft (A) into the outboard joint (B) until the stop ring (C) is close to the joint.

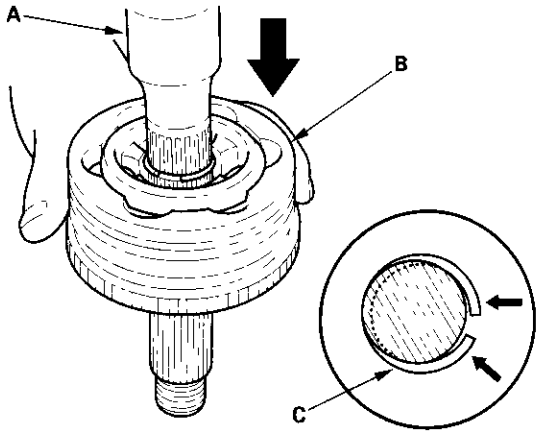


6. To completely seat the outboard joint, pick up the driveshaft and joint, and drop them from about 10 cm (4 in.) onto a hard surface. Do not use a hammer as excessive force may damage the driveshaft. Be careful not to damage the threaded section (A) of the outboard joint.

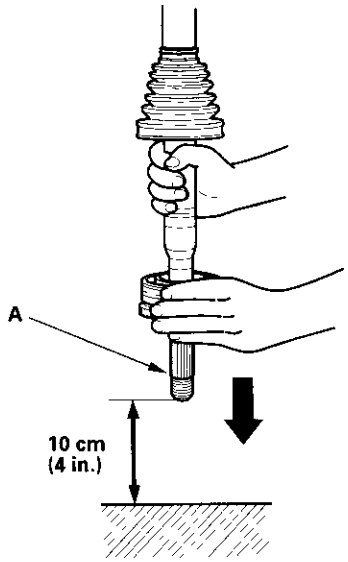

7. Check the alignment of the paint mark (A) with the outboard joint end (B).

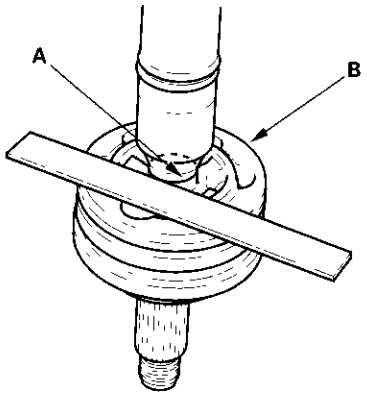


8. Pack the outboard joint with the joint grease included in the new joint boot set:

**Grease quantity**
**Outboard joint: 119 - 129 g (4.2 – 4.5 oz)**

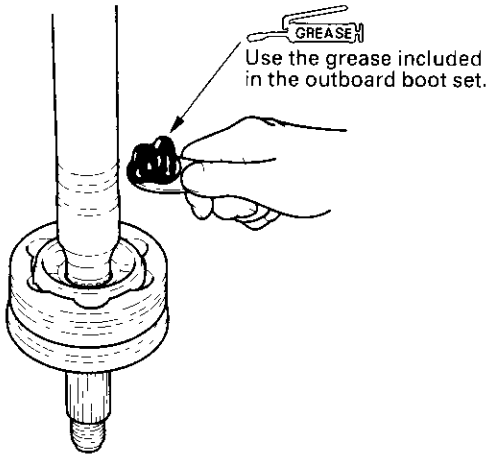


9. Adjust the length of the driveshafts to the figure below, then adjust the boots to halfway between full compression and full extension. Make sure the ends of the boots seat in the grooves of the driveshaft and joint.

**Left Driveshaft: 579 – 584 mm (22.8 – 23.0 in.)**
**Right Driveshaft: 624 – 629 mm(24.6 – 24.8 in.)**

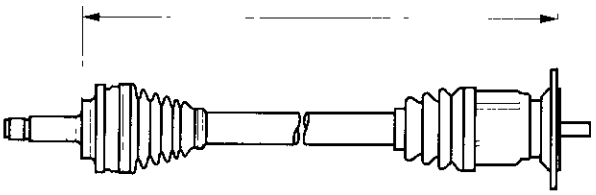

10. Fit the boot (A) ends onto the driveshaft (B) and outboard joint (C).

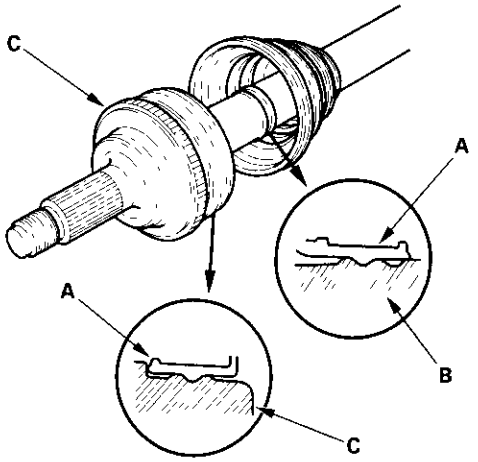


(cont'd)

## Driveshafts Reassembly (cont'd)

11. Set the new ear clamp band (A) by threading the tab (B) into holes (C) of the band.

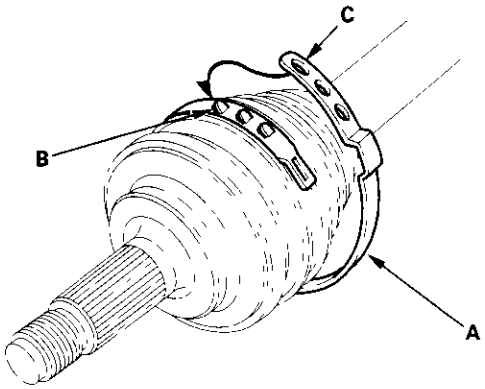


12. Close the ear portion (A) of the band with a commercially available boot band pincers Kent-Moore J-35910 or equivalent (B).

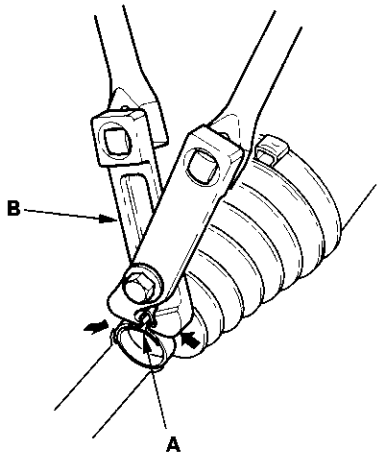


13. Check the clearance between the closed ear portion of the band. If the clearance is not within the standard, close the ear portion of the band farther.

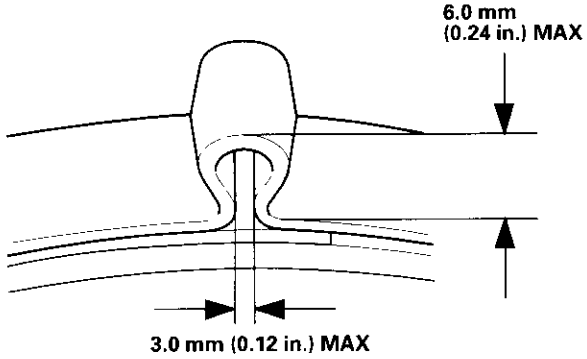


14. Repeat steps 12 and 13 for the band on the other end of the boot.

## Driveshafts Installation

1. Pull the knuckle outward, and install the outboard joint into the rear hub.

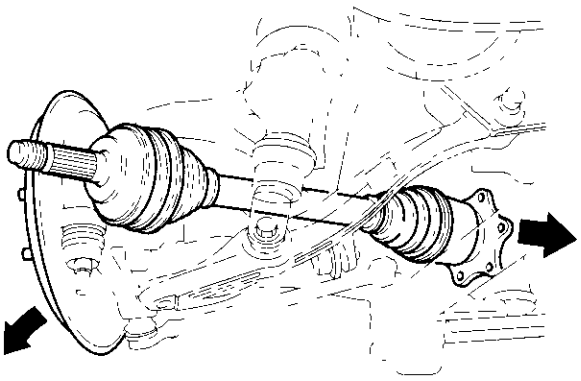

2. Install the inboard joint (A) into the rear differential (B) by aligning the reference marks (C), then install the six inboard joint mounting bolts (D) and nuts (E).

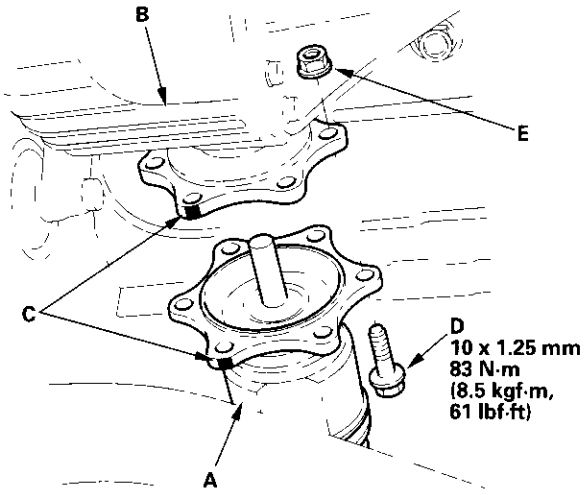


3. Install the knuckle (A) onto the lower arm (B). Be careful not to damage the ball joint boot (C). Wipe off the grease before tightening the nut at the ball joint. Torque the castle nut (D) to the lower torque specification, then tighten it only far enough to align the slot with the pin hole. Do not align the nut by loosening it.

   NOTE: Make sure the ball joint boot is not damage or cracks.

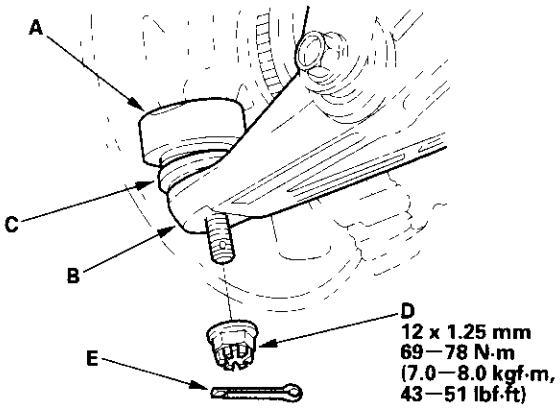


4. Install the new cotter pin (E) into the pin hole, and bend the cotter pin.

5. Install the ABS sensor harness (A) on the upper arm.

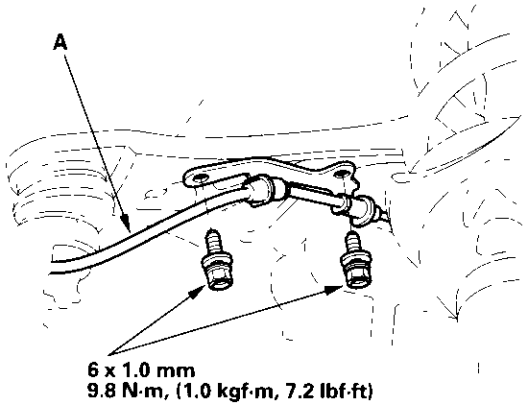


(cont'd)

## Driveshafts Installation (cont'd)

6. Install a new spindle nut (A), then tighten the nut. After tightening, use a drift to stake the spindle nut shoulder (B) against the driveshaft.

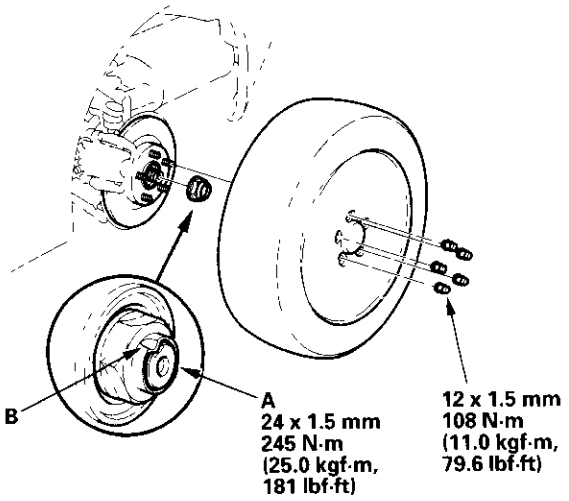


7. Clean the mating surfaces of the brake disc and the rear wheel, then install the rear wheel with the wheel nuts.

8. Turn the rear wheel by hand, and make sure the clearance between the driveshaft and circumference parts.

9. Check the rear wheel alignment, and adjust it if necessary (see page 18-5).

## Propeller Shaft Inspection

1. Shift into neutral position.

2. Raise the vehicle off the ground, and support it with safety stands in the proper locations (see page 1-13).

3. Check the universal joint boots for damage and deterioration. If the boots are damaged or deteriorated, replace the propeller shaft.

4. Check the joints for excessive play or rattle. If the universal joints have excessive play or rattle, replace the propeller shaft.

5. Install a dial indicator (A) with its needle on the center of the propeller shaft (B).

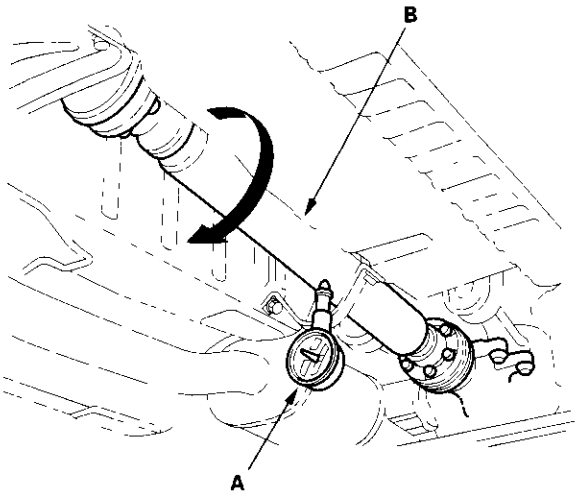


6. Turn the propeller shaft slowly, and check the runout. If the runout exceeds the service limit, replace the propeller shaft.

**Runout:**
**Service Limit: 1.5 mm (0.06 in.)**

## Propeller Shaft Removal

1. Raise the vehicle off the ground, and make sure it's securely supported.
2. Remove the propeller shaft protector.

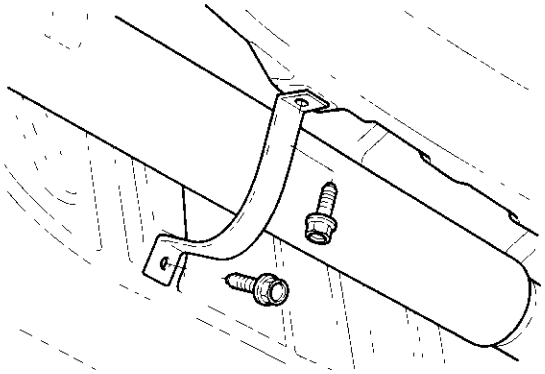

3. Make a reference mark (A) across the propeller shaft (B) and the transmission flange (C).

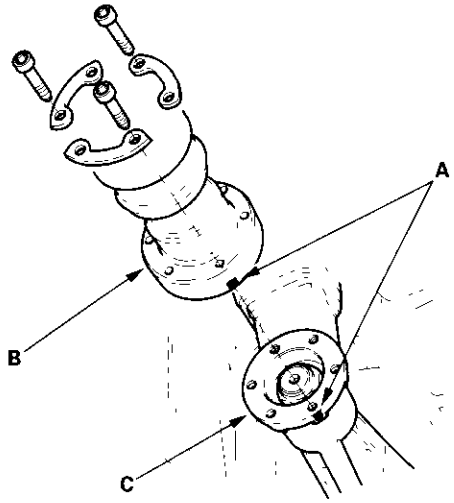


4. Separate the propeller shaft from the transmission.
5. Make a reference mark (A) across the propeller shaft (B) and the rear differential flange (C).

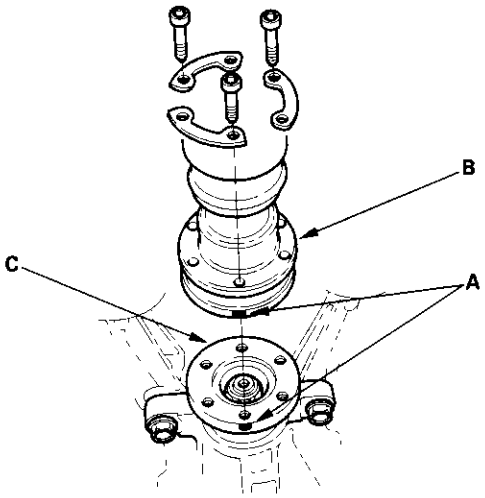


6. Separate the propeller shaft from the rear differential, then remove the propeller shaft.

## Propeller Shaft Installation

1. Install the propeller shaft (A) onto the rear differential (B) by aligning the reference marks (C).

   NOTE: When the propeller shaft is replaced, align the white marks (D) on the new propeller shaft with the white mark on the differential.

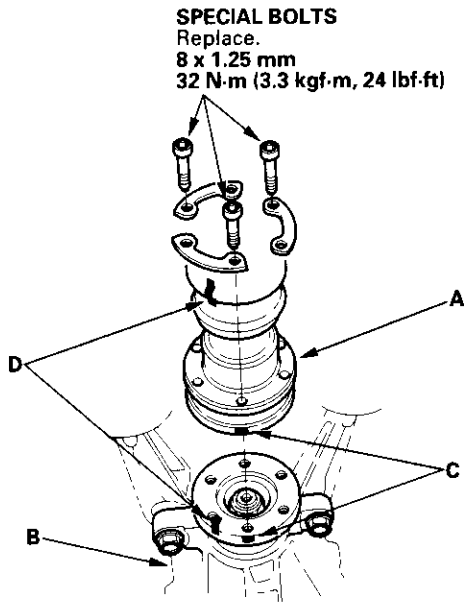


2. Install the propeller shaft (A) to the transmission (B) by aligning the reference marks (C).

   NOTE: When the propeller shaft is replaced, align the white marks (D) on the new propeller shaft with the white mark on the transmission.

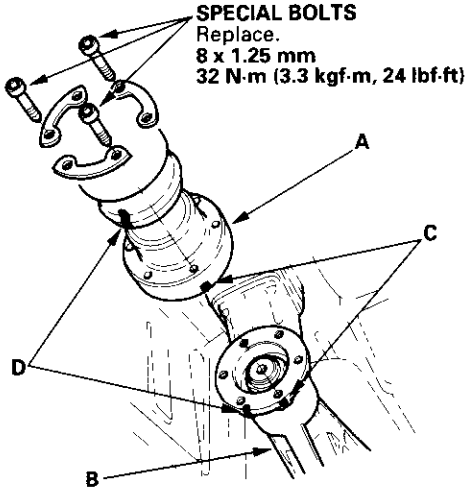


3. Install the propeller shaft protector (A).

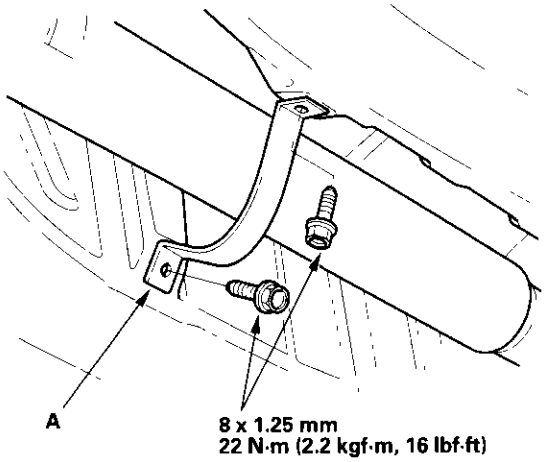

# Steering

## Steering


Special Tools ..... 17-2
Component Location Index ..... 17-3
Steering Wheel Rotational Play Check ..... 17-4
Power Assist Check ..... 17-4
Steering Linkage and Gearbox Inspection ..... 17-5
Steering Wheel Removal ..... 17-6
Steering Wheel Disassembly and Reassembly ..... 17-7
Steering Wheel Installation ..... 17-8
Steering Column Removal and Installation ..... 17-9
Steering Shaft Removal and Installation ..... 17-10
Steering Column/Shaft Inspection ..... 17-12
Steering Lock Replacement ..... 17-13
Rack Guide Adjustment ..... 17-14

**Electrical Power Steering (EPS) ..... 17-15**




## Special Tools

| Ref.No. | Tool Number | Description | Qty |
|---|---|---|---|
| ① | 07MAA-SL0020A | Locknut Wrench, 43 mm | 1 |

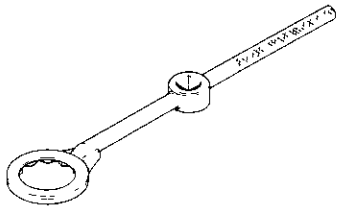

①

## Component Location Index

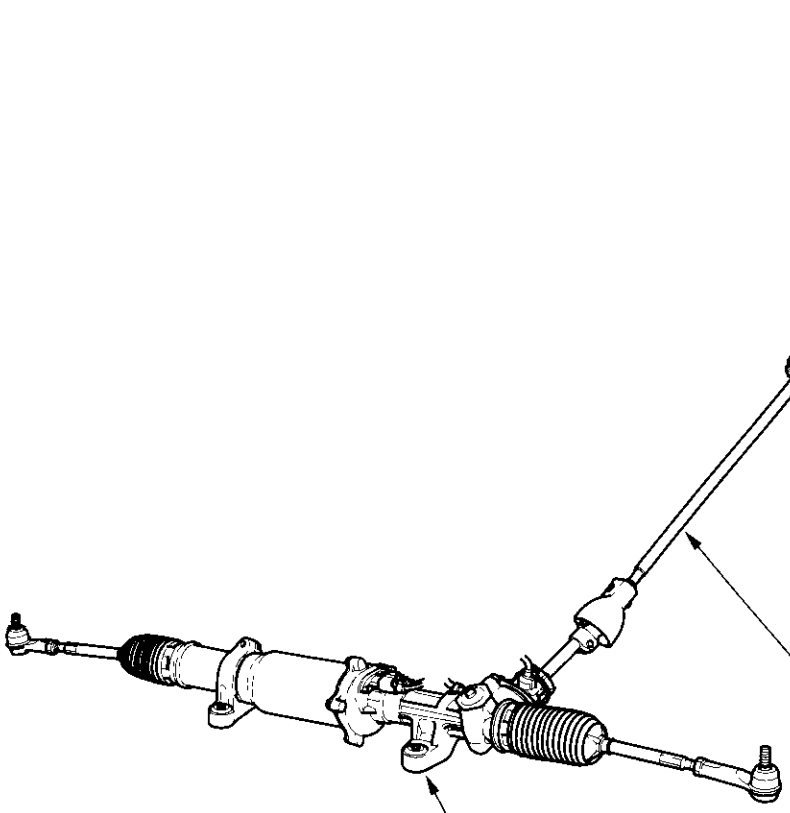

**DRIVER'S AIRBAG ASSEMBLY**
Removal/Installation, page 23-65

**STEERING WHEEL**
Removal, page 17-6
Disassembly/Reassembly, page 17-7
Installation, page 17-8

**STEERING COLUMN**
Steering Column Removal and Installation, page 17-9
Steering Column Inspection, page 17-12
Steering Lock Replacement, page 17-13

**STEERING SHAFT**
Steering Shaft Removal and Installation, page 17-10
Steering Shaft Inspection, page 17-12

**STEERING GEARBOX**
Rack Guide Adjustment, page 17-14
**ELECTRICAL POWER STEERING (EPS)**
page 17-18

## Steering Wheel Rotational Play Check

1. Turn the front wheels to the straight ahead position.
2. Measure how far you can turn the steering wheel left and right without moving the front wheels.
   - If the play is within the limit, the gearbox and linkage are OK.
   - If the play exceeds the limit, adjust the rack guide (see page 17-14). If the play is still excessive after rack guide adjustment, inspect the steering linkage and gearbox (see page 17-5).

**ROTATIONAL PLAY: 0—10 mm (0—0.39 in.)**

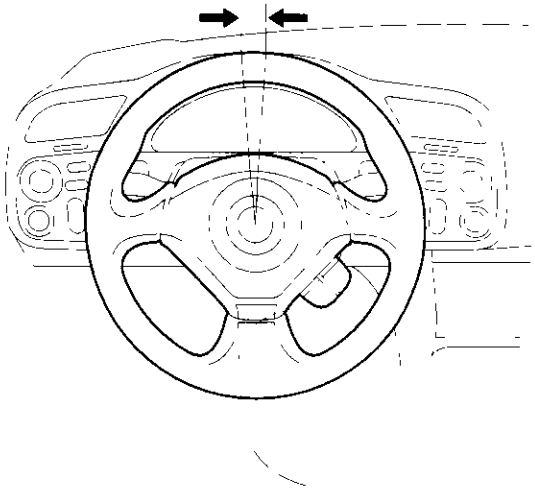

## Power Assist Check

1. Start the engine, let it idle.
2. Attach a commercially available spring scale to the steering wheel. With the engine idling and the vehicle on a clean, dry floor, pull the scale as shown and read it as soon as the tires begin to turn.

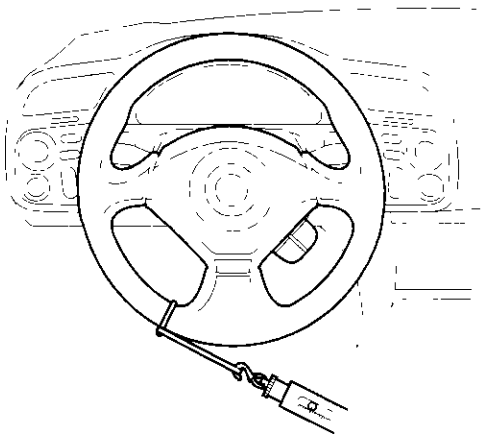

3. If the scale reads no more than 34 N (3.5 kgf, 7.7 lbf), the power assist is OK. If it reads more, check the steering linkage for damage (see page 17-5), and check the rack guide adjustment (see page 17-14).

## Steering Linkage and Gearbox Inspection

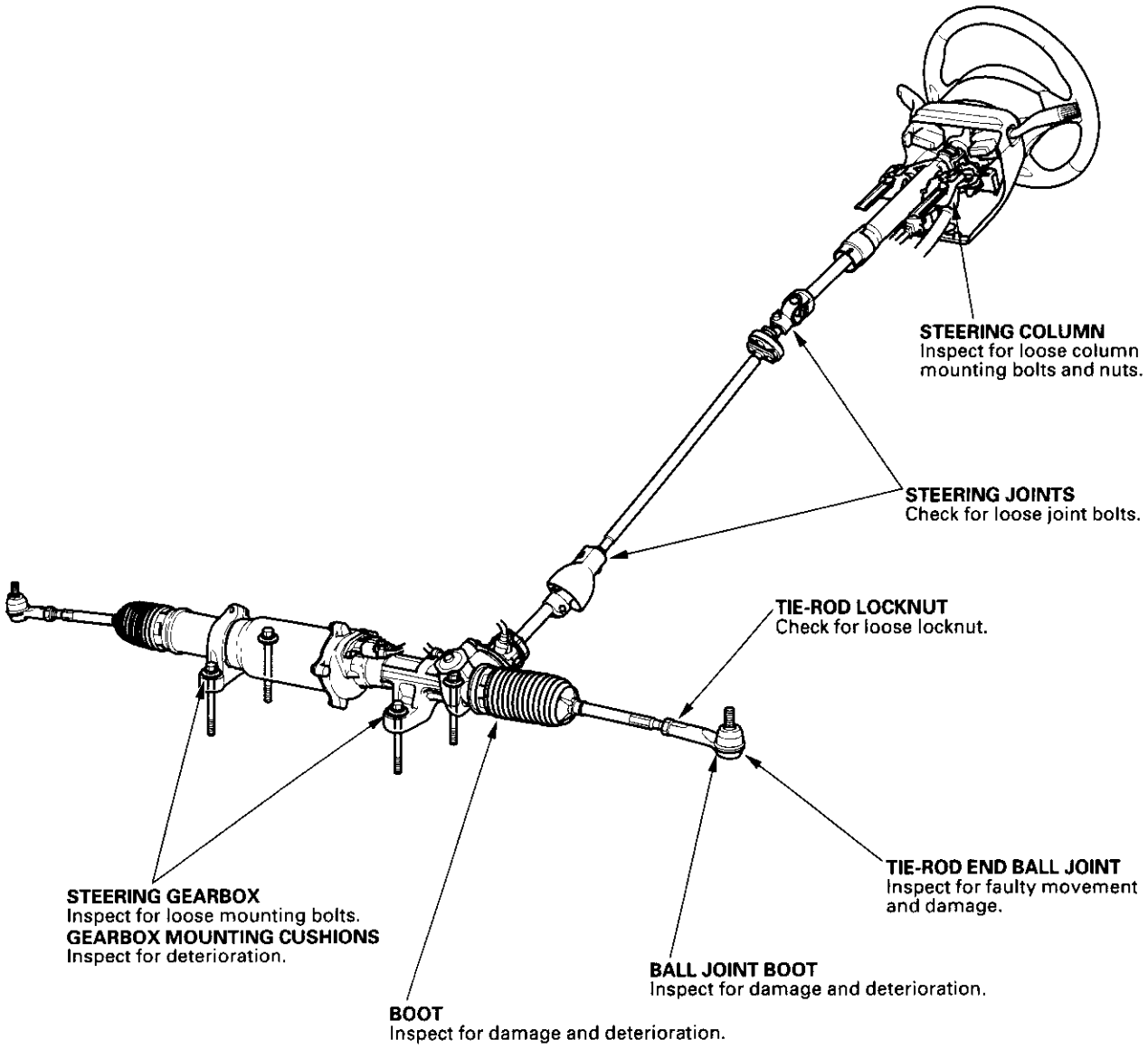

## Steering Wheel Removal

SRS components are located in this area. Review the SRS component locations, precautions, and procedures in the SRS section before performing repairs or service (see page 23-10).

1. Make sure you have the anti-theft code for the radio, then write down the radio station presets.
2. Align the front wheels straight ahead, then remove the driver's airbag from the steering wheel (see page 23-65).
3. Disconnect the cruise control switch connector (A) and horn switch connector (B).

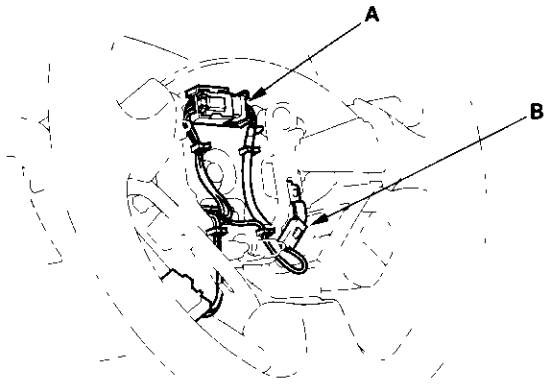


4. Loosen the steering wheel bolt (A).

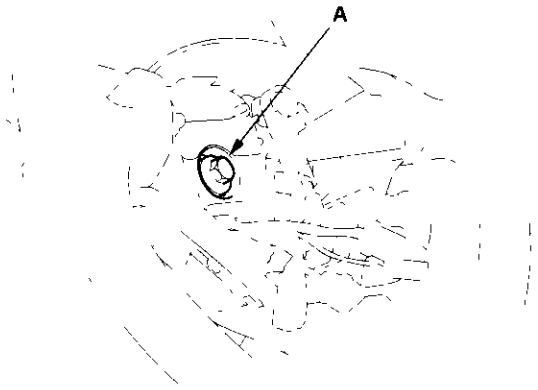


5. Install a commercially available steering wheel puller (A) on the steering wheel (B). Free the steering wheel from the steering column shaft by turning the pressure bolt (C) of the puller.

**Note these items when removing the steering wheel:**
- Do not tap on the steering wheel or the steering column shaft when removing the steering wheel.
- If you thread the puller bolts (D) into the wheel hub more than five threads, the bolts will hit the cable reel and damage it. To prevent this, install a pair of jam nuts five threads up on each puller bolt.

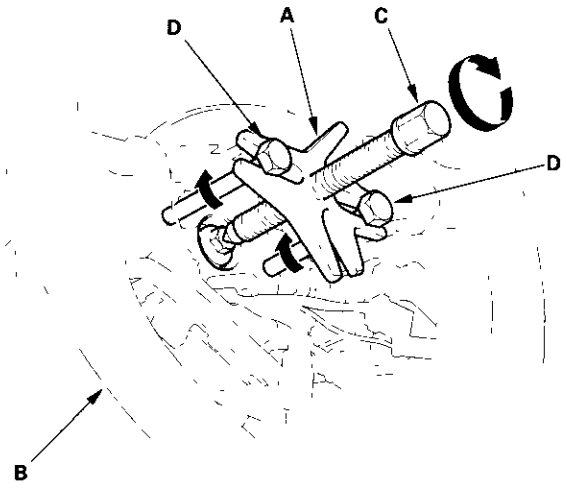


6. Remove the steering wheel puller, then remove the steering wheel bolt and steering wheel from the steering column.

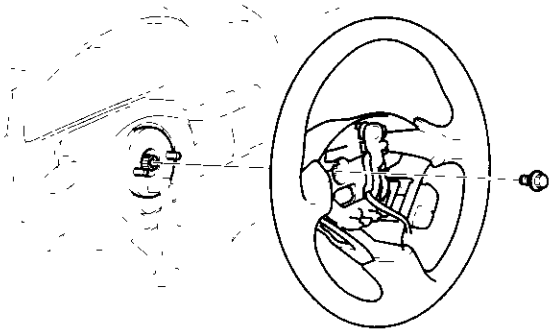

## Steering Wheel Disassembly/Reassembly

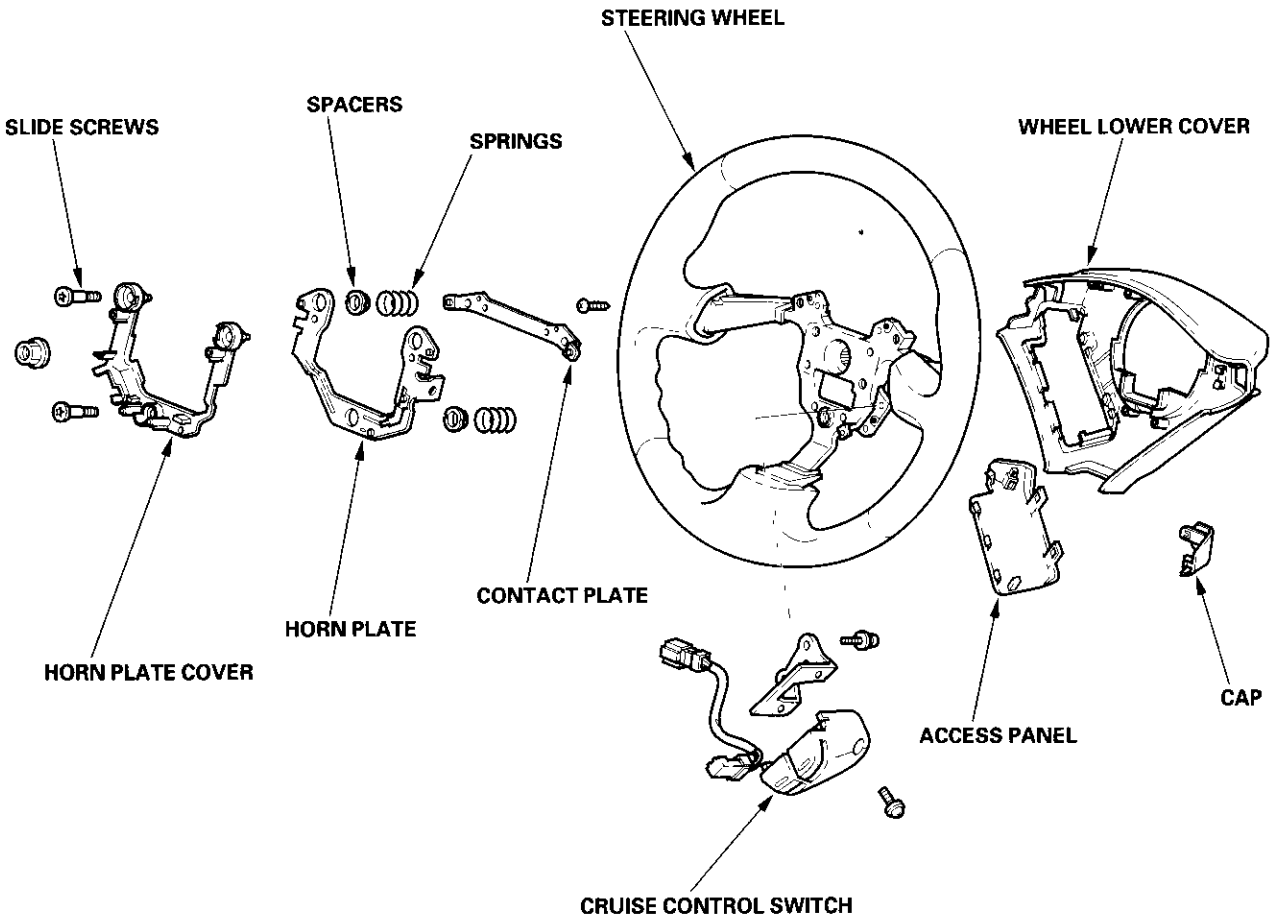

## Steering Wheel Installation

1. Before installing the steering wheel, make sure the front wheels are aligned straight ahead, then center the cable reel (A). Do this by first rotating the cable reel clockwise until it stops. Then rotate it counterclockwise about two and half turns. The arrow mark (B) on the cable reel label point should point straight up.

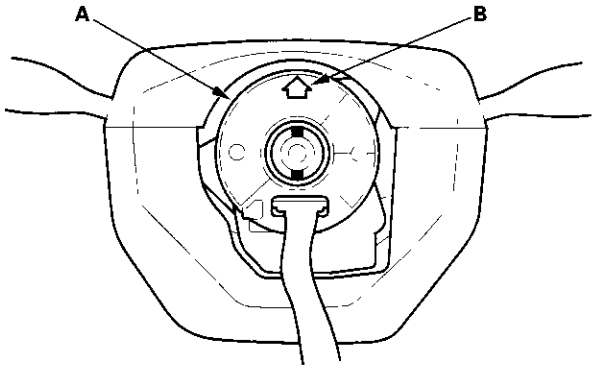


2. Position the two tabs (A) of the turn signal cancelling sleeve (B) as shown, and install the steering wheel on to the steering column shaft, making sure the steering wheel hub (C) engages the pins (D) of the cable reel and tabs of the canceling sleeve. Do not tap on the steering wheel or steering column shaft when installing the steering wheel.

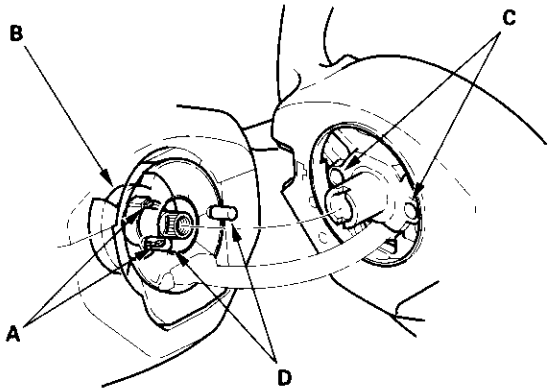


3. Install the steering wheel bolt and tighten it.

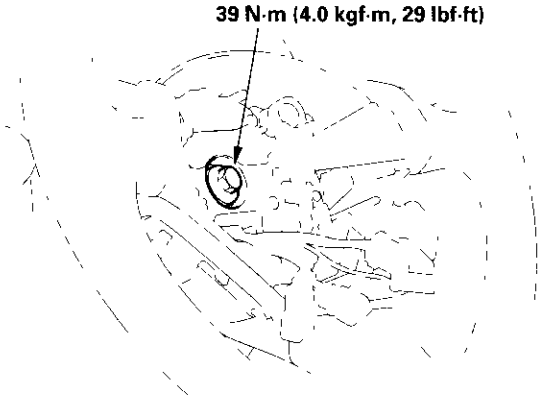


4. Connect the horn switch connector and cruise control switch connector.
5. Install the driver's airbag, and confirm that the system is operating properly (see page 23-66).
6. Reconnect the battery.
7. Check the horn, cruise control set/resume switch, and turn signal cancelling for proper operation.
8. Enter the anti-theft code for the radio, then enter the customer's radio station presets.
9. For '01-03 models; reset the clock.

## Steering Column Removal and Installation

SRS components are located in this area. Review the SRS component locations, precautions, and procedures in the SRS section before performing repairs or service (see page 23-10).

### Removal

1. Record the radio station presets, and disconnect the battery.
2. Remove the driver's airbag (see page 23-65), steering wheel, and cable reel (see page 23-72).
3. Remove the column covers (A).

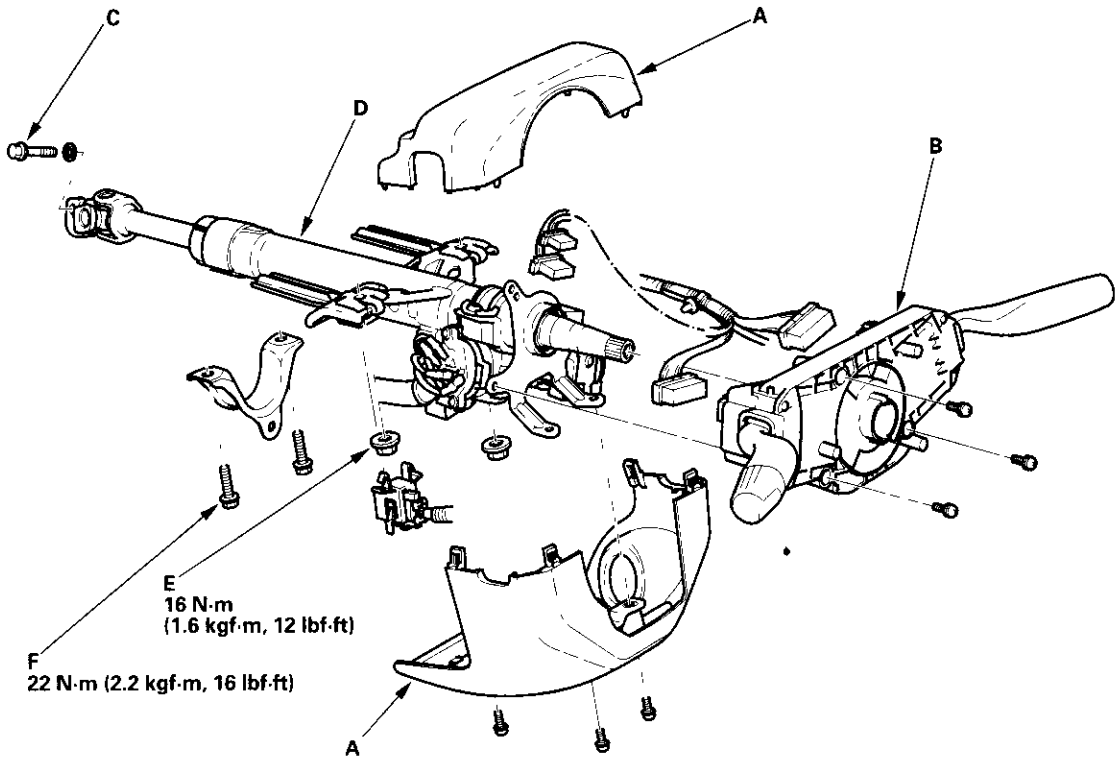


4. Remove the combination switch assembly (B) from the steering column shaft by disconnecting the connectors and removing the screws.
5. Disconnect the ignition switch connectors from the under-dash fuse/relay box.
6. Remove the steering joint bolt (C).
7. Remove the steering column (D) by removing the attaching nuts (E) and bolts (F).

(cont'd)

## Steering Column Removal and Installation (cont'd)

### Installation

1. Install the steering column, and make sure the wires are not caught or pinched by any parts.
2. Insert the lower end of the steering joint (A) onto the steering shaft (B) (line up the bolt hole (C) with the flat portion (D) on the shaft).

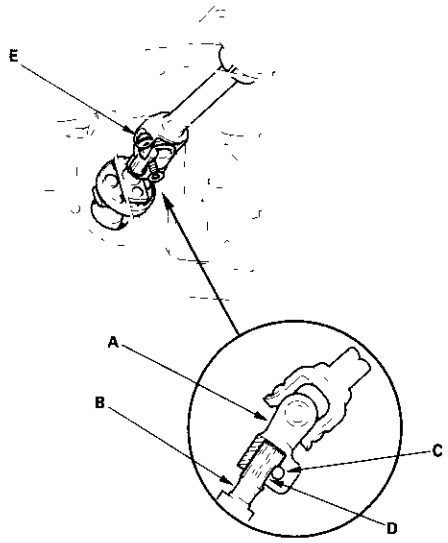


3. Pull on the steering joint to make sure that the steering joint is fully seated, but do not pull excessively on the joint. Then install the steering joint bolt (E) and tighten it to the specified torque.

**US thru VIN JHMAP 114-YT008411**
**Canada thru VIN JHMAP 114-YT800750**
**Torque: 22 N·m (2.2 kgf·m, 16 lbf·ft)**

**US from VIN JHMAP 114-YT008412**
**Canada from VIN JHMAP 114-YT800751**
**Torque: 29 N·m (3.0 kgf·m, 22 lbf·ft)**

4. Finish the installation, and note these items:
   - Make sure the wire harness is routed and fastened properly.
   - Make sure the connectors are properly connected.
   - Reinstall the steering wheel (see page 17-8).
   - Reconnect the battery and reset the radio presets.
     - Enter the anti-theft code for the radio, then enter the customer's radio station presets.
     - For '01-03 models; set the clock.
   - Verify cruise control, horn, and turn signal switch operation.
   - Check wheel alignment (see page 18-5).

## Steering Shaft Removal and Installation

### Removal

1. Remove the steering column (see page 17-9).
2. Mark (A) the steering joint (B) and pinion shaft (C) to identify the position of the joint on the pinion shaft.

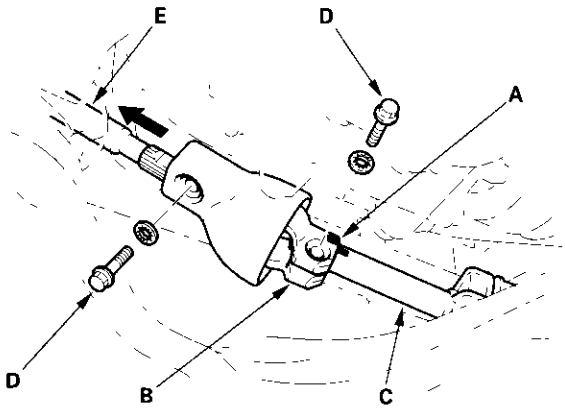


3. Remove the steering joint bolts (D).
4. Disconnect the steering joint from the pinion shaft by pulling the steering shaft (E).
5. Remove the steering joint (B) from steering shaft.
6. Remove the steering shaft.

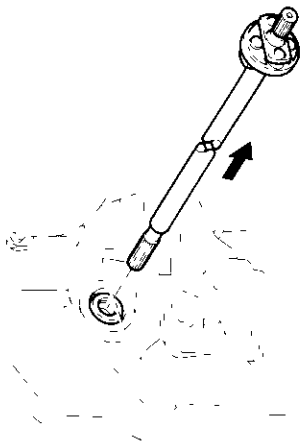

## Installation

1. Apply multipurpose grease to the inside surface of the pinion dust seal (A).

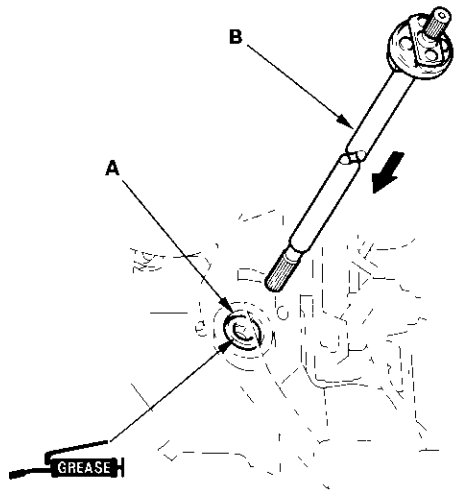


2. Insert the steering shaft (B) into the engine compartment carefully to avoid damaging the pinion dust seal. Make sure the shaft comes out of frame hole.

3. Install the steering column with the column mounting nuts and column holder (see page 17-9).

4. Slip the joint (A) of the column shaft onto the steering shaft (B), then loosely install the joint bolt (C) (line up the bolt hole (D) with the flat portion (E) of the shaft). Pull the steering shaft toward the column.

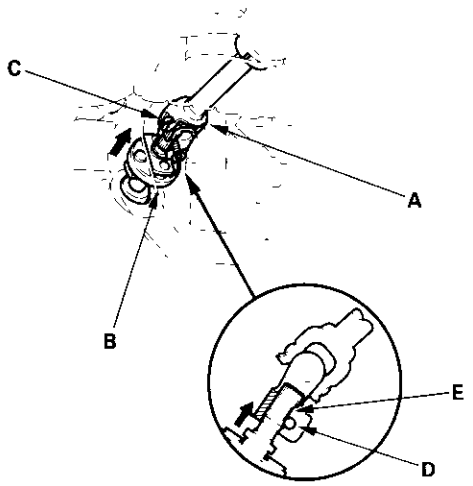


5. Slip the upper end (A) of the steering joint onto the steering shaft (B) (from the engine compartment). Be sure the steering joint and steering shaft are aligned with the serrations; the joint should slip on freely. If not, reposition the serration of the steering joint.

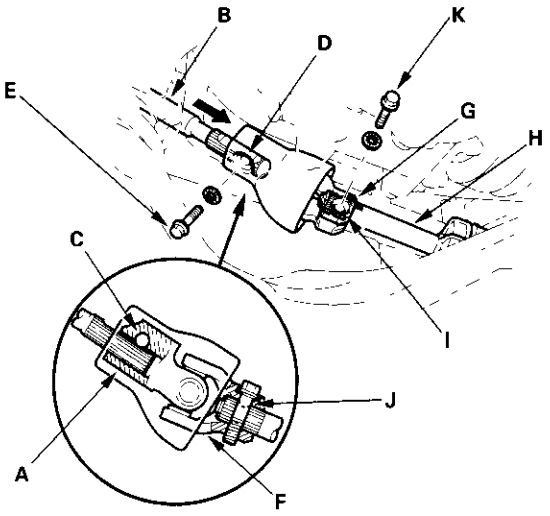


6. Line up the bolt hole (C) with the flat portion (D) of the shaft (B), and loosely install the upper joint bolt (E). Pull the steering joint to make sure that the joint is fully seated.

7. Slip on the lower end (F) of the steering joint by aligning the marks (G) on the pinion shaft (H) and joint. Line up the bolt hole (I) with groove around (J) the pinion shaft, and install the lower joint bolt (K) and tighten it by band. Don't torque the bolt yet. Pull the steering joint to make sure that the joint is fully seated.

8. Pull the steering shaft toward the pinion shaft. Then tighten the upper joint bolt (E). The lower joint bolt (K) (both in the engine compartment), and the joint bolt on colum shaft (under the dashboard) to the specified torque.

**US thru VIN JHMAP 114-YT008411**
**Canada thru VIN JHMAP 114-YT800750**
**Torque: 22 N·m (2.2 kgf·m, 16 lbf·ft)**

**US from VIN JHMAP 114-YT008412**
**Canada from VIN JHMAP 114-YT800751**
**Torque: 29 N·m (3.0 kgf·m, 22 lbf·ft)**

## Steering Column/Steering Shaft Inspection

- Check the steering column ball bearing (A) and the steering joint bearings (B) for play and proper movement. If any bearing is noisy or has excessive play, replace the steering column as an assembly.
- Check the retaining collar (C) for damage. If it is damaged, replace the steering column as an assembly.
- Check the absorbing plates (D) for distortion or breakage. If there is distortion or breakage replace the steering column as an assembly.
- Check the steering shaft (E) for bending and damage.
- Check the joint dust seal (F) for deterioration and damage.

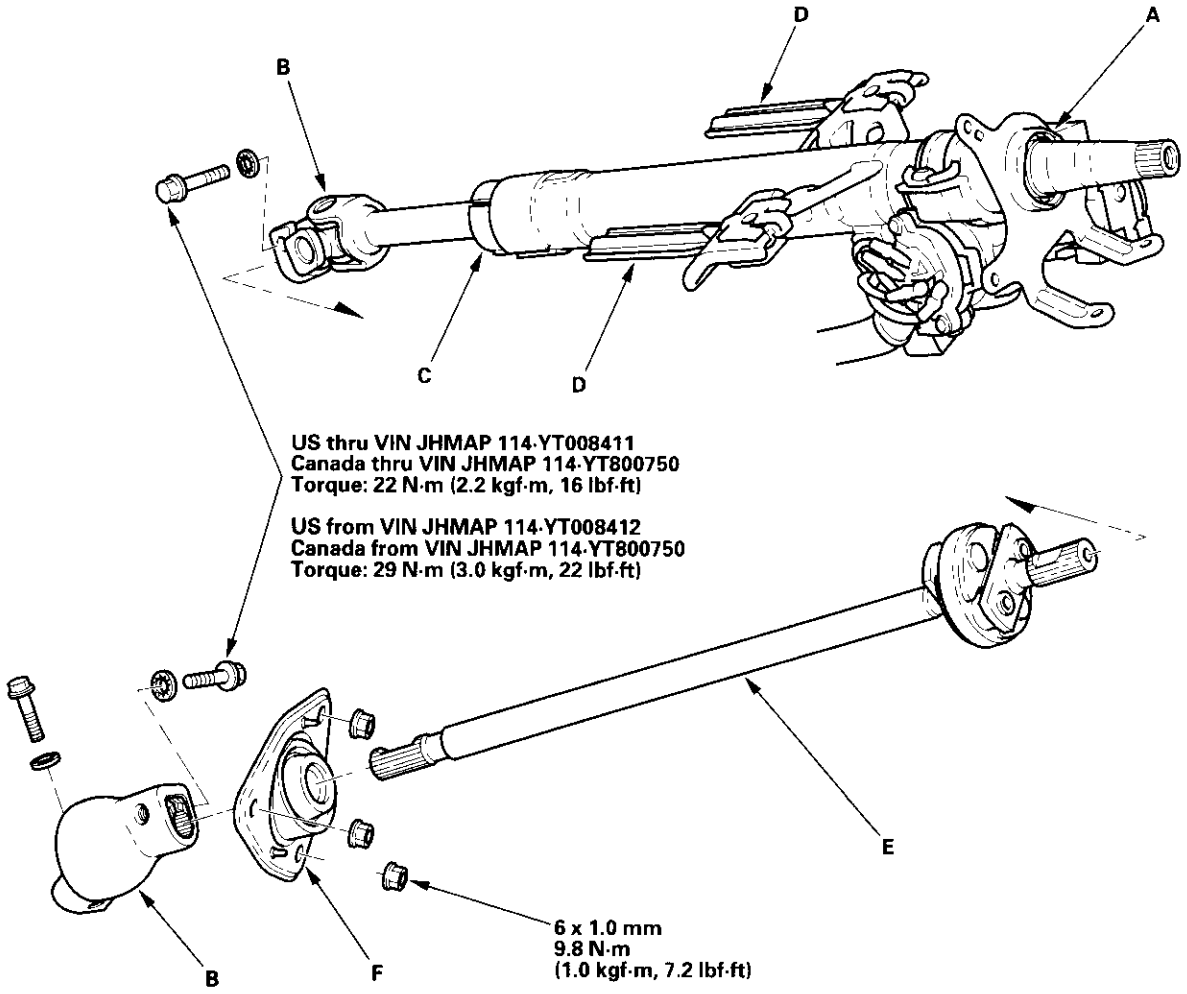

## Steering Lock Replacement

1. Remove the steering column (see page 17-9).
2. Center punch each of the two shear bolts, and drill their heads off with a 5 mm (3/16 in.) drill bit. Be careful not to damage the switch body when removing the shear bolts.

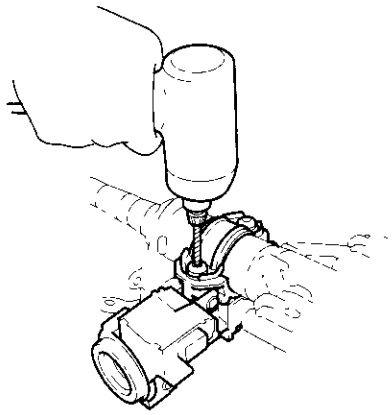

3. Remove the shear bolts from the switch body.
4. Install the switch body without the key inserted.
5. Loosely tighten the new shear bolts.
6. Insert the ignition key, and check for proper operation of the steering wheel lock and that the ignition key turns freely.
7. Tighten the shear bolts (A) until the hex heads (B) twist off.

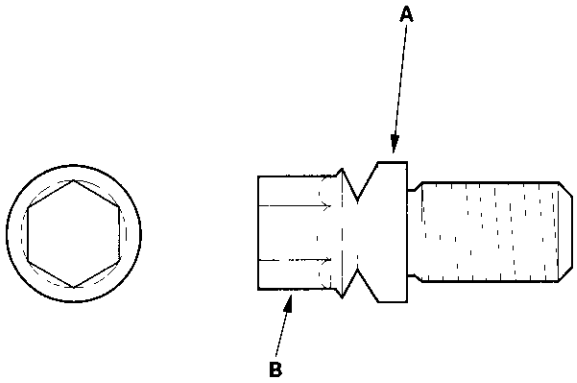

## Rack Guide Adjustment

**Special Tools Required**
Locknut wrench, 43 mm 07MAA-SL0020A

1. Set the wheels in the straight ahead position.
2. Remove the splash shield.
3. Remove the lower radiator hose bracket (A).

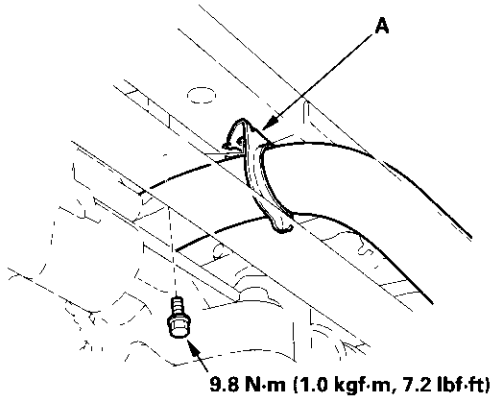


4. Loosen the rack guide screw locknut (A) with the special tool, then loosen the rack guide screw (B).

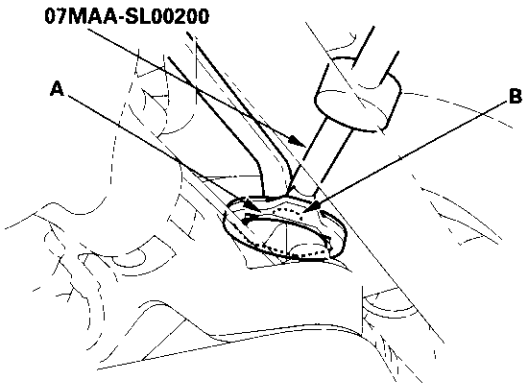


5. Tighten the rack guide screw to 25 N·m (2.5 kgf·m, 18 lbf·ft), then loosen it.
6. Retighten the rack guide screw to 3.9 N·m (0.4 kgf·m, 2.9 lbf·ft) then back it off to the specified angle.

   **Specified Return Angle: 15 ± 5°**

7. Tighten the locknut to 25 N·m (2.5 kgf·m, 18 lbf·ft) while holding the rack guide screw.
8. Install the lower radiator clamp.
9. Check for tight or loose steering from lock to lock.
10. Perform following inspections:
    - Steering wheel rotational play (see page 17-4).
    - Power assist with vehicle parked (see page 17-4).

# Electrical Power Steering (EPS)

## EPS Components


Special Tools ..... 17-16
Component Location Index ..... 17-17
General Troubleshooting Information ..... 17-18
DTC Troubleshooting Index ..... 17-22
Symptom Troubleshooting Index ..... 17-23
System Description ..... 17-24
Circuit Diagram ..... 17-26
DTC Troubleshooting ..... 17-28
EPS Indicator Circuit Troubleshooting ..... 17-42
Memorizing the Torque Sensor Neutral Position ..... 17-45
Steering Gearbox Removal and Installation ..... 17-46
Steering Gearbox Overhaul ..... 17-53
Torque Sensor Replacement ..... 17-54
Rack Guide Removal/Installation ..... 17-54
Rack End Removal and Installation ..... 17-55
Gearbox Bracket Removal/Installation ..... 17-58
Ball Joint Boot Replacement ..... 17-58
EPS Control Unit Removal/Installation ..... 17-59

## Special Tools

| Ref.No. | Tool Number | Description | Qty |
|---|---|---|---|
| ① | 07MAC-SL00200 | Ball Joint Remover, 28 mm | 1 |
| ② | 07746-0010100 | Attachment, 32 x 35 mm | 1 |
| ③ | 07749-0010000 | Driver | 1 |
| ④ | 07974-6790000 | Oil Seal Driver | 1 |

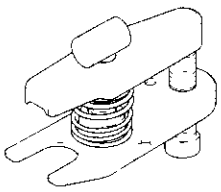

①

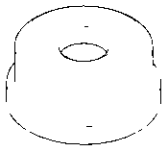

②

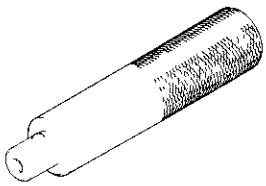

③



④

## Component Location Index

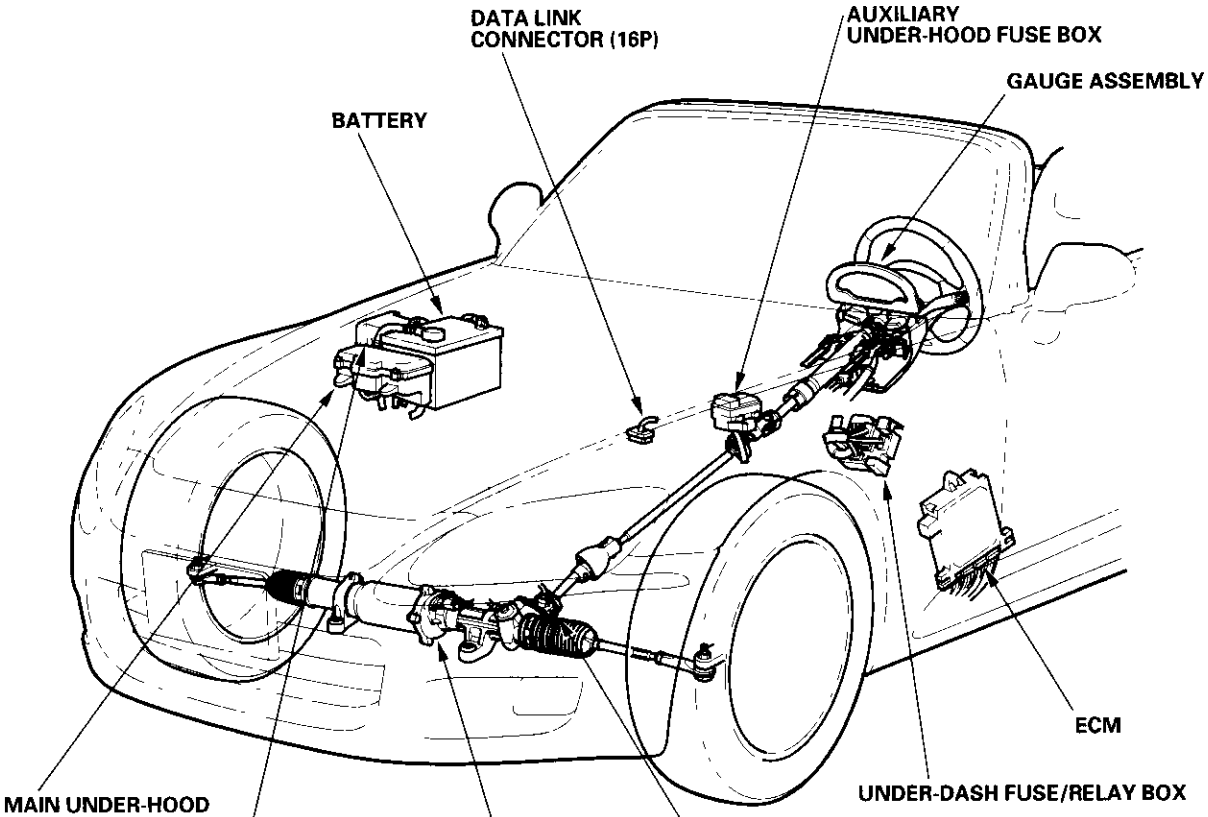


**EPS CONTROL UNIT**
EPS Control Unit Removal/ Installation, page 17-59

**TORQUE SENSOR**
Torque Sensor Replacement, page 17-54

**STEERING GEARBOX**
Steering Gearbox Removal and Installation, page 17-46
Steering Gearbox Overhaul, page 17-53
Rack Guide Removal/Installation, page 17-54
Rack End Removal and Installation, page 17-55
Gearbox Bracket Removal/Installation, page 17-58
Ball Joint Boot Replacement, page 17-58

## General Troubleshooting Information

### EPS Indicator

Under normal conditions, the EPS indicator comes on when the ignition switch is turned to the ON (II) position, then goes off after the engine is started. This indicates that the bulb and its circuit are operating correctly.
If there is any trouble in the system after the engine is started, the EPS indicator will stay on, and the power assist is turned off.

When EPS indicator comes on, the control unit memorizes the DTC. In this case, the control unit will not activate the EPS system after the engine starts again, but it keeps the EPS indicator on.

When DTC 11, 12, or 13 is stored in the control unit, the EPS indicator will stay on until the DTC is erased. Even though the system is operating normally, the EPS indicator will come on under the following conditions:

- When the vehicle is barely moving, 0.62 mph (1 km/h) or stopped, and the engine speed is 2,000 rpm or higher for about 3 minutes.
- When the engine speed is 500 rpm or less, and the vehicle is travelling at a speed of 6.2 mph (10 km/h) or more for about 3 minutes.

To determine the actual cause of the problem, question the customer about the conditions during which the problem occured, taking the above conditions into consideration.

### Diagnostic Trouble Code (DTC)

- If the CPU cannot be activated, or it fails, the EPS indicator comes on, but the DTC is not memorized.
- The memory can hold any number of DTCs. However, when the same DTC is detected more than once, the most recent DTC is written over the prior DTC, therefore only one occurance is memorized.
- The lowest DTC is indicated first. The DTCs are indicated in ascending order, not in the order that they occurred.
- The DTCs are memorized in the EEPROM (non-volatile memory) therefore the memorized DTCs cannot be erased by disconnecting the battery. Perform the specified procedures to clear DTCs.

### Self-diagnosis

Self-diagnosis can be classified into two categories:
- Initial diagnosis: performed right after the engine starts and until the EPS indicator goes off.
- Regular diagnosis: performed right after the initial diagnosis until the ignition switch is turned OFF.

The EPS control unit performs the following functions when a problem is detected by self-diagnosis:

1. Turns on the EPS indicator.
2. Memorizes the DTC.
3. Stops power assist and manual steering operation resumes.

   NOTE:
   - When DTC 23 (a problem with the circuit for engine speed signal) is detected, the power assist will return to normal when the vehicle speed is 6.2 mph (10 km/h) or above.
   - For DTCs 21, 22, and 23 the EPS indicator will go off automatically, and the system returns to normal.

### Restriction on Power Assist Operation

Repeated extreme steering force, such as turning the steering wheel continuously back-and-forth with the vehicle stopped, causes an increase of power consumption in the EPS motor. The increase of electric current causes the motor to heat up. Because this heat adversely affects the system, the control unit monitors the electric current of the motor.

When the control unit detects heat build-up in the motor, it reduces the electric current to the motor gradually to protect the system, and it restricts the power assist operation. The EPS indicator does not come on during this function.

When steering torque is not applied to the steering wheel, or when the ignition is turned off, the control unit will restore the power assist gradually until it's fully restored (after about 8 minutes).

### EPS Control Unit Noise

A relay sound or "click" can be heard from the EPS control unit about 30 seconds after the ignition switch is turned off. This sound is normal.

### Torque Sensor Neutral Position

The EPS control unit stores the torque sensor neutral position in the EEPROM. Memorize the torque sensor neutral position whenever the gearbox is removed and installed, or when the torque sensor or EPS control unit is replaced.

NOTE: The torque sensor neutral position is not effected when erasing the DTCs.

## How to Troubleshoot EPS DTCs

The troubleshooting flowchart procedures assume that the cause of the problem is still present and the EPS indicator is still on. Following the flowchart when the EPS indicator does not come on can result in incorrect diagnosis.
The connector illustrations show the female terminal connectors with a single outline and the male terminal connectors with a double outline.

1. Question the customer about the conditions when the problem occured, and try to reproduce the same conditions for troubleshooting. Find out when the EPS indicator came on, such as during EPS control, after EPS control, when the vehicle was at a certain speed, etc.

2. When the EPS indicator does not come on during the test drive, but troubleshooting is done based on the DTC, check for loose connectors, poor terminal contact, etc., before you start troubleshooting.

3. After troubleshooting, clear the DTC and test-drive the vehicle. Be sure the EPS indicator does not come on.

## How to Retrieve EPS DTCs

**Honda PGM Tester Method:**

1. With the ignition switch OFF, connect the Honda PGM Tester (A) to the 16P data link connector (DLC) (B) located under the dash on the passenger's side of the vehicle.

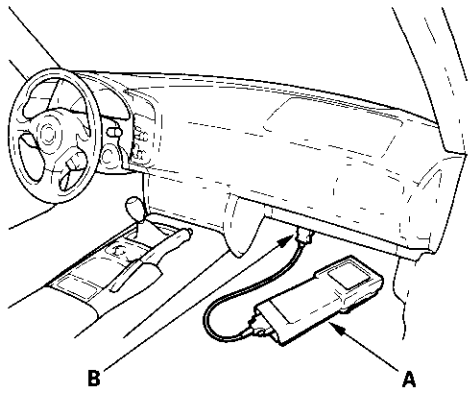


2. Turn the ignition ON (II), and follow the prompts on the PGM Tester to display the DTC(s) on the screen. After determining the DTC, refer to the DTC troubleshooting index.

   NOTE: See the Honda PGM Tester user's manual for specific instructions.

**Service Check Signal Circuit Method:**

1. With the ignition switch OFF, connect the Honda PGM Tester (A) to the 16P data link connector (DLC) (B) located under the dash on the passsenger's side of the vehicle.

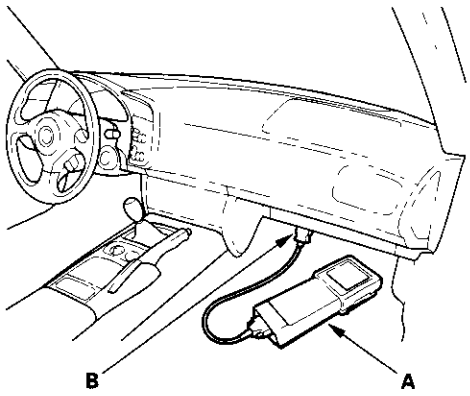


2. Short the SCS circuit to body ground using the Honda PGM Tester.

3. Turn the ignition switch ON (II).

(cont'd)

## General Troubleshooting Information (cont'd)

4. The blinking frenquency indicates the DTC. DTCs are indicated by a series of long and short blinks. Add the long and short blinks together to determine the DTC. After determining the DTC, refer to the DTC troubleshooting index.

   The system will not indicate the DTC unless these conditions are met:
   - Set the front wheels in the straight ahead driving position.
   - The ignition switch is turned ON (II).
   - The engine is stopped.
   - The SCS circuit is shorted to body ground before the ignition switch is turned ON (II).

**Example of DTC 12**

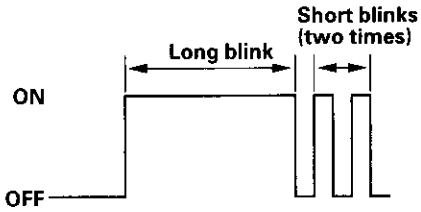


**Example of DTC 23**

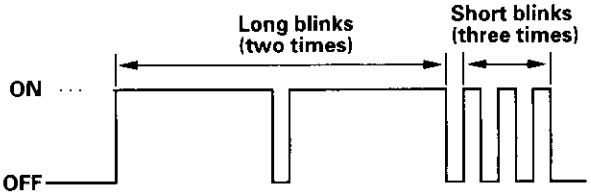


5. Turn the ignition switch OFF.

6. Disconnect the Honda PGM Tester from the DLC.

### How to Clear EPS DTCs

**Honda PGM Tester Method:**

1. With the ignition switch OFF, connect the Honda PGM Tester (A) to the 16P data link connector (DLC) (B) located under the dash on the passenger's side of the vehicle.

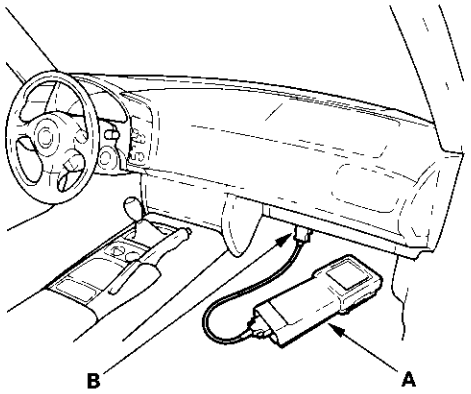


2. Turn the ignition switch ON (II), and clear the DTC(s) by following the screen prompts on the PGM Tester.

   NOTE: See the Honda PGM Tester user's manual for specific instructions.

**Service Check Signal Circuit Method:**

NOTE: Use this procedure when the PGM Tester software does not match the year/model vehicle you are working on.

1. With the ignition switch OFF, connect the Honda PGM tester (A) to the 16P data link connector (DLC) (B) located under the dash on the passenger's side of the vehicle.

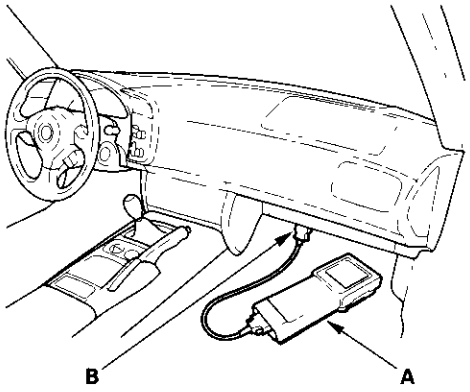


2. Whith the vehicle on the ground, set the front wheels in the straight ahead driving position.

3. Short the SCS circuit to body ground using the Honda PGM Tester.

4. Turn the steering wheel 45 degrees to the left from the straight ahead driving position, and hold the steering wheel in that position.

5. Turn the ignition switch ON (II). The EPS indicator comes on, then it goes off after 4 seconds.

6. Within 4 seconds after the EPS indicator goes off, return the steering wheel to the straight ahead driving position and release the steering wheel. The EPS indicator comes on again 4 seconds after releasing the steering wheel.

7. Within 4 seconds after the EPS indicator comes on, turn the steering wheel 45 degrees to the left again and hold it in that position.
   The EPS indicator goes off after 4 seconds.

8. Within 4 seconds after the EPS indicator goes off, return the steering wheel to the straight ahead driving position again and release the steering wheel. The EPS indicator blinks twice 4 seconds after releasing the steering wheel, indicating that the DTC was erased.

   NOTE: If the EPS indicator does not blink twice, an error was made in the procedure and the DTC was not erased. Turn the ignition switch OFF, and repeat the operation from the step 3.

9. Turn the ignition switch OFF within 5 seconds after the EPS indicator blinks twice.

   NOTE: If the ignition switch is not turned OFF within 5 seconds after the EPS indicator blinks, the system will go to the memorizing mode of the torque sensor neutral position. To avoid this, turn the steering wheel 45 degrees to left from the straight ahead driving position and turn the ignition switch OFF. This will return the system to the alert mode.

10. Disconnect the Honda PGM Tester from the DLC.

11. Perform the DTC code output operation, and be sure that the code has been erased.

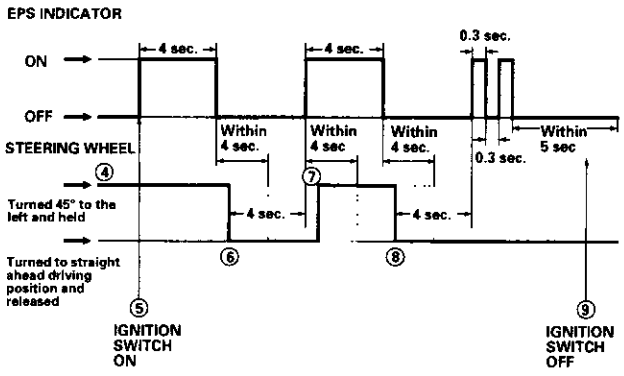

## DTC Troubleshooting Index

| DTC | Detection Item | Note |
|---|---|---|
| DTC: 1 | Power relay stuck ON | (see page 17-28) |
| DTC: 2 | Fail-safe relay stuck ON | (see page 17-28) |
| DTC: 3 | LOW FET (Motor drive transistor) stuck ON | (see page 17-28) |
| DTC: 4 | UP FET (Motor drive transistor) stuck ON | (see page 17-29) |
| DTC: 5 | Open to body ground in the motor circuit | (see page 17-30) |
| DTC: 11 | Difference of high voltage and lower voltage on the torque sensor | (see page 17-32) |
| DTC: 12 | A problem with voltage for torque sensor VT3 | (see page 17-33) |
| DTC: 13 | A problem with average of voltage for torque sensor VT1 and VT2 | (see page 17-32) |
| DTC: 14 | Open or short to body ground in the torque sensor circuit | (see page 17-34) |
| DTC: 21 | A problem with the voltage for IG1 | (see page 17-35) |
| DTC: 22 | Excessive change of the vehicle speed sensor signal | (see page 17-36) |
| | A problem with average for vehicle speed and engine speed | (see page 17-36) |
| DTC: 23 | A problem with the circuit for engine speed signal | (see page 17-37) |
| DTC: 30 | A problem with the sub-microcomputer | (see page 17-38) |
| DTC: 31 | A problem with the initial current sensor offset | (see page 17-38) |
| DTC: 32 | A problem with the main current sensor offset | (see page 17-38) |
| DTC: 33 | A problem with the current sensor | (see page 17-38) |
| DTC: 34 | A problem with the main microcomputer | (see page 17-39) |
| DTC: 35 | A problem with the sub-microcomputer | (see page 17-39) |
| DTC: 36 | A problem with the change of the motor voltage | (see page 17-39) |
| DTC: 37 | A problem with the motor voltage | (see page 17-40) |
| DTC: 50 to 62 | A problem with the CPU in the EPS control unit | (see page 17-42) |

## Symptom Troubleshooting Index

| Symptom | Diagnostic procedure | Also check for |
|---|---|---|
| EPS indicator does not come on | EPS Indicator Circuit Troubleshooting (see page 17-42) | |
| EPS indicator does not go off and no DTC is stored | EPS Indicator Circuit Troubleshooting (see page 17-42) | |
| EPS indicator does not stay on, no DTC is stored, and there is no power assist | 1. Check the RED wire between the EPS control unit and the motor for a short to ground. Repair as needed.<br>2. If the RED wire is OK, replace the steering gearbox (short in the motor). | |

# EPS Components

## System Description

### EPS Control Unit Inputs and Outputs for Connector A (2P)

EPS CONTROL UNIT CONNECTOR A (2P)

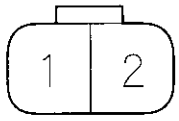


Wire side of female terminals.

| Terminal number | Wire color | Terminal sign (Terminal name) | Description | Measurement | | |
|---|---|---|---|---|---|---|
| | | | | Terminals | Conditions (Ignition Switch ON (II)) | Voltage |
| 1 | GRN | MOTOR – (Motor minus) | Drives the actuator motor | 1-Ground | —— | —— |
| 2 | RED | MOTOR + (Motor plus) | Drives the actuator motor | 2-Ground | —— | —— |

### EPS Control Unit Inputs and Outputs for Connector B (14P)

EPS CONTROL UNIT CONNECTOR B (14P)

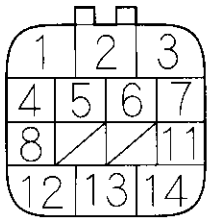


Wire side of female terminals.

| Terminal number | Wire color | Terminal sign (Terminal name) | Description | Measurement | | |
|---|---|---|---|---|---|---|
| | | | | Terminals | Conditions (Ignition Switch ON (II)) | Voltage |
| 1 | YEL | IG1 (Ignition 1) | Power source for activating the system | 1-Ground | Ignition switch ON (II) | Battery voltage |
| | | | | | Ignition switch OFF | 0 V |
| 2 | WHT/BLK | VSP (Vehicle speed pulse) | Detects vehicle speed signal from the speedometer | 2-Ground | Turn the rear wheel | About 5 V – 0 V |
| 3 | PNK | VS1 (Voltage sensor 1) | Detects torque sensor signal | —— | —— | —— |
| 4 | BLK | GND2 (Ground 2) | Ground for the EPS control unit | —— | —— | —— |
| 5 | BLU | NEP (Engine pulse) | Detects tachometer signal | 5-Ground | Start the engine | About 3 V – 6 V |
| 6 | BLK | GND1 (Ground 1) | Ground for the EPS control unit | —— | —— | —— |
| 7 | BLU/RED | PVF (Voltage fade) | Drives the torque sensor | —— | —— | —— |
| 8 | BRN | SCS (Service check signal) | Detects service check connector signal | —— | —— | —— |
| 11 | WHT/GRN | VS2 (Voltage sensor 2) | Detects torque sensor signal | —— | —— | —— |
| 12 | YEL/BLU | WLP (Warning) | Drives the EPS indicator light | 12-Ground | Start the engine | Battery voltage |
| | | | | | Ignition switch OFF | 0 V |
| 13 | BLU/BLK | PS-SIG (Power steering signal) | Provides idle speed-up signal to the ECM | 13-Ground | Start the engine and turn the steering wheel to full lock | Battery voltage for 1 second |
| 14 | LT BLU | DLC (Data link connector) | Communicates with Honda PGM-Tester | —— | —— | —— |

## EPS Control Unit Inputs and Outputs for Connector C (2P)

EPS CONTROL UNIT CONNECTOR C (2P)

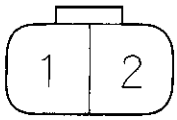


Wire side of female terminals.

| Terminal number | Wire color | Terminal sign (Terminal name) | Description | Measurement | | |
|---|---|---|---|---|---|---|
| | | | | Terminals | Conditions (Ignition Switch ON (II)) | Voltage |
| 1 | BLK | PG (Power ground) | Ground for the actuator motor | 1-Ground | —— | —— |
| 2 | WHT/RED | + B (Plus battery) | Power source for the actuator motor | 2-Ground | At all times | Battery voltage |

# EPS Components

## Circuit Diagram

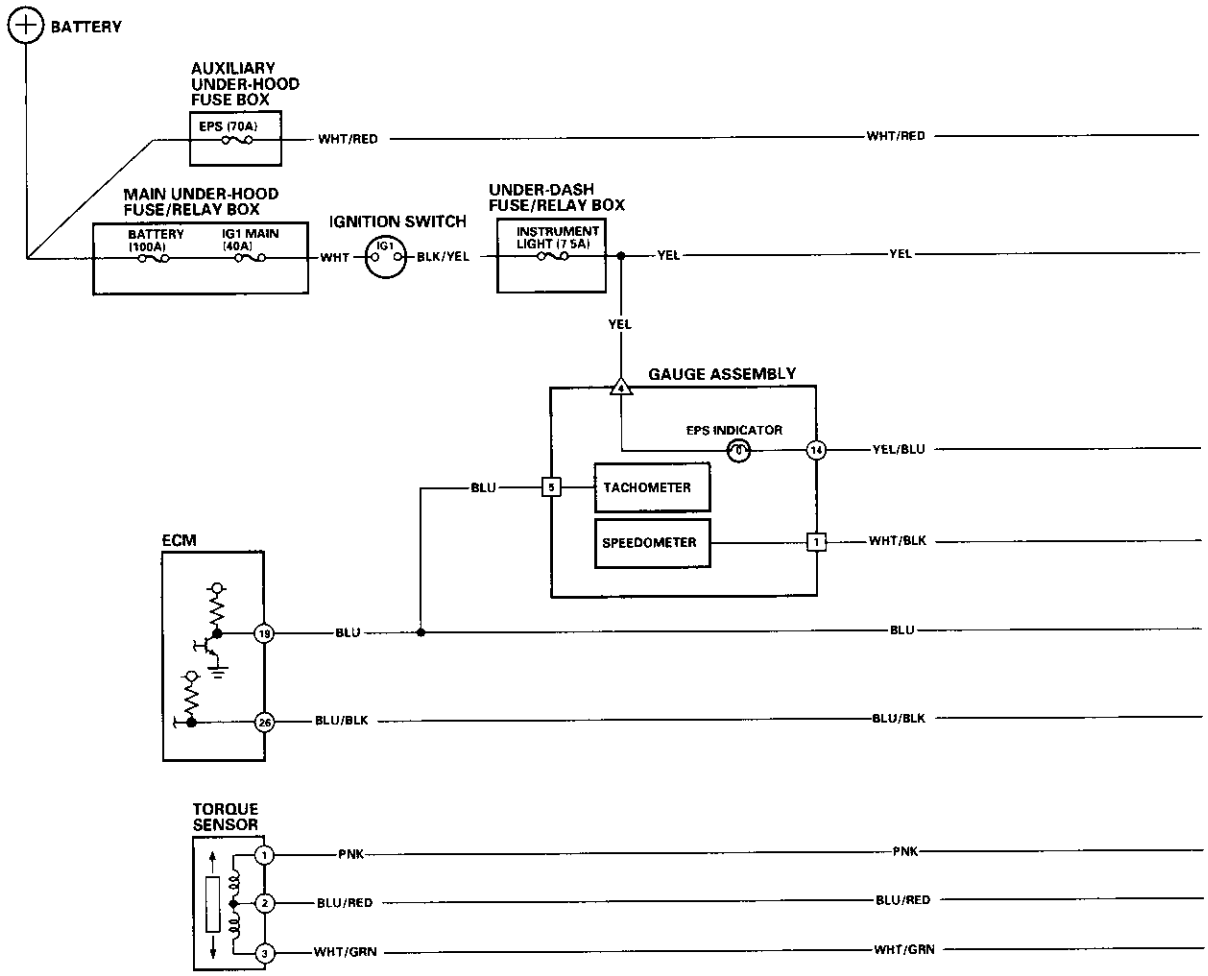


GAUGE ASSEMBLY CONNECTOR A (14P)
(○: connector)

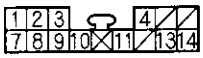


TORQUE SENSOR 3P CONNECTOR




Terminal side of female terminals

ECM CONNECTOR A (32P)

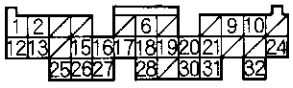


Wire side of female terminals

GAUGE ASSEMBLY CONNECTOR B (12P)
(△: connector)

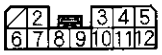


GAUGE ASSEMBLY CONNECTOR C (20P)
(□: connector)

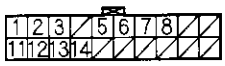


Wire side of female terminals

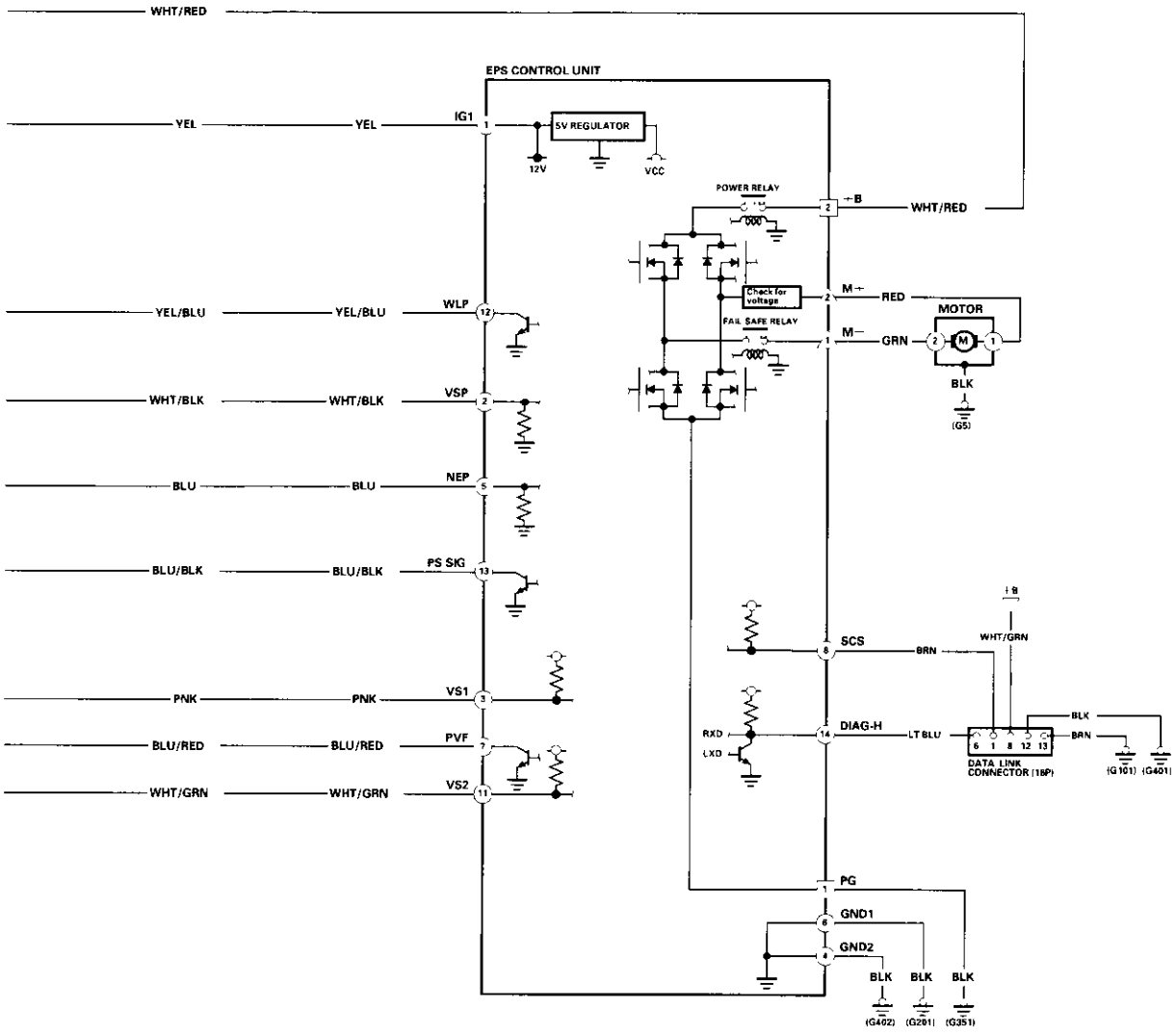


**MOTOR CONNECTOR (2P)**




Terminal side of female terminals

**EPS CONTROL UNIT CONNECTOR C (2P)**
( : connector)




Terminal side of female terminals

**EPS CONTROL UNIT CONNECTOR A (2P)**
(△: connector)




Wire side of female terminals

**EPS CONTROL UNIT CONNECTOR B (14P)**
( : connector)

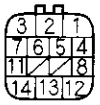


Terminal side of female terminals

**DATA LINK CONNECTOR (16P)**

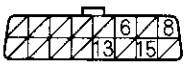


Wire side of female terminals

## DTC Troubleshooting

### DTC 1: Power Relay Stuck ON

### DTC 2: Fail-safe Relay Stuck ON

1. Clear the DTC.
2. Start the engine.
3. Wait at least 10 seconds.

*Does the EPS indicator come on and DTC 1 or DTC 2 indicated?*

**YES** – Check for loose EPS control unit connectors. If necessary, substitute a known-good EPS control unit and recheck. ■

**NO** – The system is OK at this time. ■

### DTC 3: Lower FET Stuck ON

1. Disconnect EPS control unit connector A (2P) and the motor 2P connector.
2. Check for continuity between EPS control unit connector A (2P) terminal No. 2 and motor 2P connector terminal No. 1.

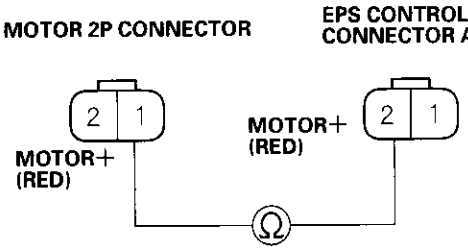


Terminal side of female terminals

*Is there continuity?*

**YES** – Go to step 3.

**NO** – Repair open in the wire between EPS control unit and the motor. ■

3. Check for continuity between the EPS control unit connector A (2P) terminal No. 1 and motor 2P connector terminal No. 2.

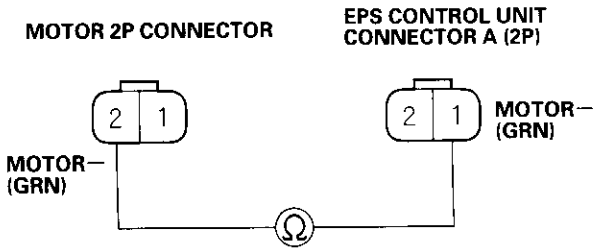


Terminal side of female terminals

*Is there continuity?*

**YES** – Go to step 4.

**NO** – Repair open in the wire between the EPS control unit and the motor. ■

4. Check for continuity between EPS control unit connector A (2P) terminals No. 2 and No. 1.

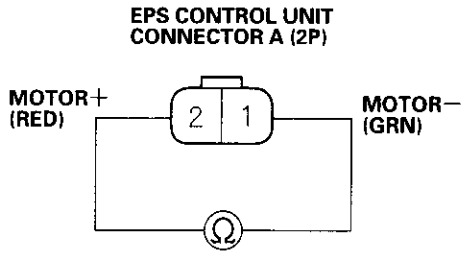


Terminal side of female terminals

*Is there continuity?*

**YES** – Repair short between the RED and GRN wires for the EPS motor circuit. ■

**NO** – Replace the steering gearbox. (Short circuit to body ground inside the gearbox). ■

## **DTC 4:** Upper FET Stuck ON

1. Disconnect EPS control unit connector C (2P).
2. Check for continuity between EPS control unit connector C (2P) terminal No. 1 and body ground.

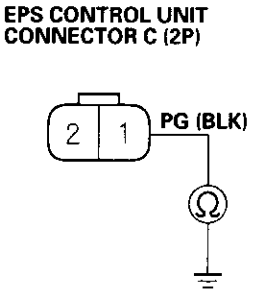


Terminal side of female terminals

*Is there continuity?*

**YES** – Check for loose EPS control unit connectors. If necessary, substitute a known-good EPS control unit and recheck. ■

**NO** – Repair open in the wire between the EPS control unit and the body ground (G351). ■

## DTC Troubleshooting (cont'd)

### DTC 5: Open In The Motor Wire Harness

1. Clear the DTC.
2. Start the engine.
3. Turn the steering wheel to right or left, and wait 10 seconds or more.

   *Does the EPS indicator come on?*

   **YES** – Go to step 4.

   **NO** – Check for loose wires or poor connections. If the connections are good, the system is OK at this time. ■
4. Stop the engine, and verify the DTC.

   *Is DTC 5 indicated?*

   **YES** – Go to step 5.

   **NO** – Perform the appropriate troubleshooting for the code indicated. ■
5. Check the EPS (70 A) fuse in the auxiliary under-hood fuse box, and reinstall the fuse if it is OK.

   *Is the fuse OK?*

   **YES** – Go to step 6.

   **NO** – Replace the fuse and recheck. ■
6. Make sure the ignition switch is OFF, then disconnect EPS control unit connector C (2P).
7. Measure the voltage between terminal No. 2 and body ground.

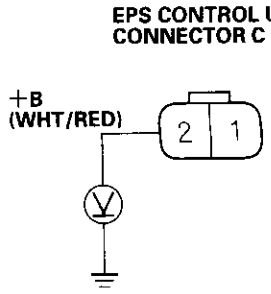


Terminal side of female terminals

   *Is there battery voltage?*

   **YES** – Go to step 8.

   **NO** – Repair open in the wire between the EPS (70 A) fuse and the EPS control unit. ■
8. Check for continuity between EPS control unit connector C (2P) terminal No. 1 and body ground.

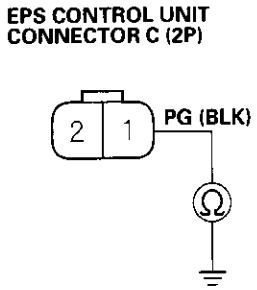


Terminal side of female terminals

   *Is there continuity?*

   **YES** – Go to step 9.

   **NO** Repair open in the wire between the EPS control unit and body ground (G351). ■
9. Disconnect EPS control unit connector A (2P) and the motor 2P connector.

10. Check for continuity between EPS control unit connector A (2P) terminal No. 2 and motor 2P connector terminal No. 1.

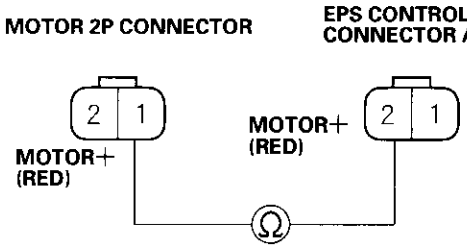


Terminal side of female terminals

*Is there continuity?*

**YES** – Go to step 11.

**NO** – Repair open in the wire between EPS control unit and the motor. ■

11. Check for continuity between the EPS control unit connector A (2P) terminal No. 1 and motor 2P connector terminal No. 2.

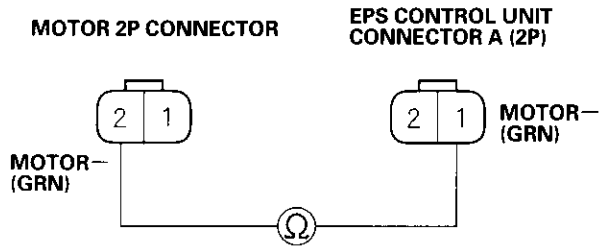


Terminal side of female terminals

*Is there continuity?*

**YES** – Go to step 12.

**NO** – Repair open in the wire between the EPS control unit and the motor. ■

12. Check for continuity between EPS control unit connector A (2P) terminal No. 1 and body ground.

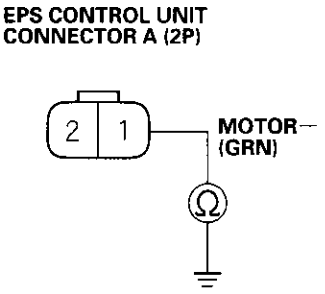


Terminal side of female terminals

*Is there continuity?*

**YES** – Repair short to body ground in the wire between the EPS control unit and the motor. ■

**NO** – Go to step 13.

13. Check for continuity between EPS control unit connector A (2P) terminal No. 2 and body ground.

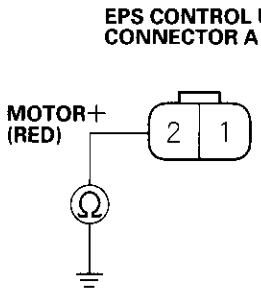


Terminal side of female terminals

*Is there continuity?*

**YES** – Repair short to body ground in the wire between the EPS control unit and the motor. ■

**NO** – Check for loose EPS control unit connectors. If necessary, substitute a known-good EPS control unit and recheck. ■

## DTC Troubleshooting (cont'd)

### DTC 11, 13: Torque Sensor

1. Clear the DTC.
2. Start the engine.

   *Does the EPS indicator come on?*

   **YES** – Go to step 3.

   **NO** – Check for loose wires or poor connections. If the connections are good, the system is OK at this time. ■

3. Stop the engine, and verify the DTC.

   *Is DTC 11 or 13 indicated?*

   **YES** – Go to step 4.

   **NO** – Perform the appropriate troubleshooting for the code indicated. ■

4. Make sure the ignition switch is OFF, then disconnect EPS control unit connector B (14P).
5. Check for continuity between terminal No. 3 and body ground.

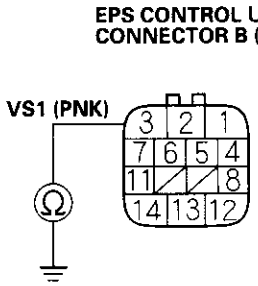


Terminal side of female terminals

*Is there continuity?*

**YES** – Go to step 6.

**NO** – Go to step 9.

6. Disconnect the torque sensor 3P connector.
7. Check for continuity between the appropriate torque sensor 3P connector terminal and body ground (see table).

| Terminal name | Torque Sensor terminal No. |
|---|---|
| VS1 | 1 |
| PVF | 2 |
| VS2 | 3 |

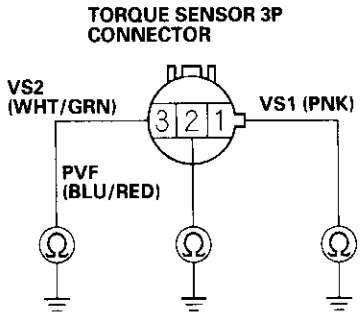


Terminal side of female terminals

*Is there continuity?*

**YES** – Repair short to body ground in the appropriate sensor circuit between the torque sensor and the EPS control unit. ■

**NO** – Go to step 8.

8. On the sensor side, check for continuity between the torque sensor 3P connector terminal No. 2 and body ground.

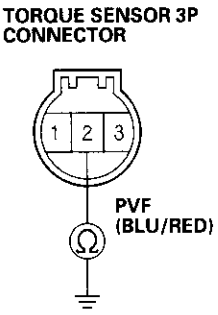


Terminal side of female terminals

*Is there continuity?*

**YES** – The EPS system is OK at this time. Check for loose EPS control unit connectors. If necessary, substitute a known-good EPS control unit and recheck. ■

**NO** – Replace the torque sensor. ■

9. Check for continuity between the appropriate EPS control unit connector B (14P) and torque sensor 3P connector terminals (see table).

| Terminal name | Torque Sensor terminal No. | EPS control unit terminal No. |
|---|---|---|
| VS1 | 1 | 3 |
| PVF | 2 | 7 |
| VS2 | 3 | 11 |

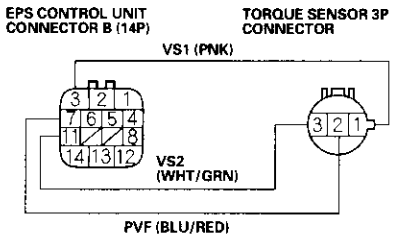

Terminal side of female terminals

*Is there continuity?*

**YES** – Go to step 10.

**NO** – Repair open in the appropriate torque sensor circuit between the EPS control unit and the torque sensor. ■

10. On the sensor side, check for resistance between torque sensor 3P connector terminals No. 1 and No. 2, and between terminals No. 2 and No. 3.

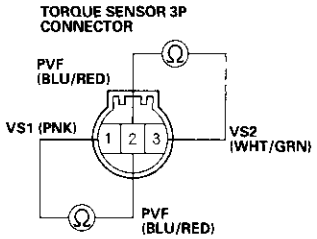

Terminal side of female terminals

*Is the resistance between 12 – 14 Ω (at 20°, 68°F)?*

**YES** – The EPS system is OK at this time. Check for loose EPS control unit connectors. If necessary, substitute a known-good EPS control unit and recheck. ■

**NO** – Replace the torque sensor. ■

## **DTC 12:** Torque Sensor PVF

1. Clear the DTC.
2. Start the engine.
3. Wait at least 10 seconds.

   *Does the EPS indicator come on?*

   **YES** – Go to step 4.

   **NO** – Check for loose wires or poor connections. If the connections are good, the system is OK at this time. ■

4. Verify the DTC.

   *Is DTC 12 indicated?*

   **YES** – Check for loose EPS control unit connectors. If necessary, substitute a known-good EPS control unit and recheck. ■

   **NO** – Perform the appropriate troubleshooting for the code indicated. ■

## DTC Troubleshooting (cont'd)

### DTC 14: Torque Sensor (Resistance)

1. Clear the DTC.
2. Start the engine.
3. Turn the steering wheel fully to the left, and hold it in that position for 10 seconds or more.

   *Does the EPS indicator come on?*

   **YES** – Go to step 4.

   **NO** – Check for loose wires or poor connections. If the connections are good, the system is OK at this time. ■
4. Stop the engine, and verify the DTC.

   *Is DTC 14 indicated?*

   **YES** – Go to step 5.

   **NO** – Perform the appropriate troubleshooting for the code indicated. ■
5. Make sure the ignition switch is OFF, then disconnect the torque sensor 3P connector and EPS control unit connector B (14P).
6. Check for continuity between torque sensor 3P connector terminals No. 1 and No. 2.

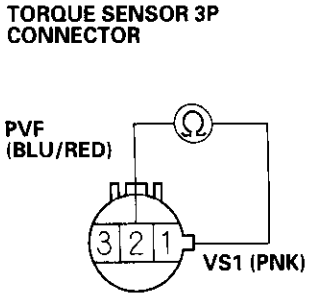


Terminal side of female terminals

*Is there continuity?*

**YES** – Repair short between the BLU/RED and PNK wires in the torque sensor circuit between the torque sensor and the EPS control unit. ■

**NO** – Go to step 7.

7. Check for continuity between torque sensor 3P connector terminals No. 2 and No. 3.

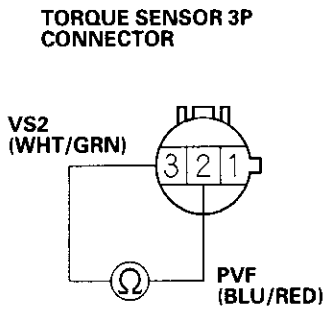


Terminal side of female terminals

*Is there continuity?*

**YES** – Repair short between the WHT/GRN and BLU/RED wires in the torque sensor circuit between the torque sensor and the EPS control unit. ■

**NO** – Go to step 8.

8. Check for continuity between torque sensor 3P connector terminals No. 1 and No. 3.

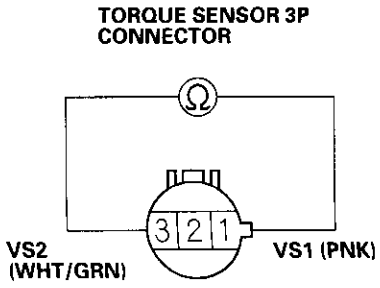


Terminal side of female terminals

*Is there continuity?*

**YES** – Repair short between the WHT/GRN and PNK wires in the torque sensor circuit between the torque sensor and the EPS control unit. ■

**NO** – Go to step 9.

9. On the sensor side, check for resistance between the torque sensor 3P connector terminals No. 1 and No. 2, and between terminal No. 2 and No. 3.

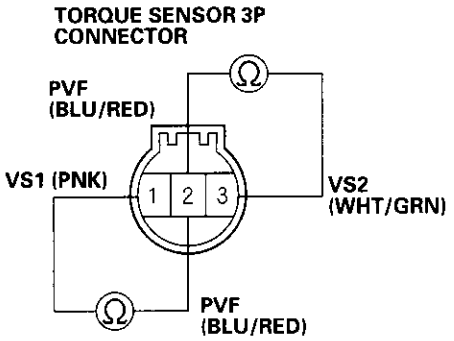


Terminal side of male terminals

*Is the resistance between 12– 13 Ω (at 20°, 68°F)?*

**YES** – The EPS system is OK at this time. Check for loose EPS control unit connectors. If necessary, substitute a known-good EPS control unit and recheck.■

**NO** – Replace the torque sensor.■

## DTC 21: Voltage For IG1

1. Check the INSTRUMENT LIGHT (7.5 A) fuse in the under-dash fuse/relay box, and reinstall the fuse if it is OK.

   NOTE: All indicators except the charging system indicator will not come on when the INSTRUMENT LIGHT (7.5 A) fuse is blown.

   *Is the fuse OK?*

   **YES** – Go to step 2.

   **NO** – Replace the fuse and recheck.■

2. Disconnect EPS control unit connector B (14P).
3. Turn the ignition switch ON (II).
4. Measure the voltage between terminal No. 1 and body ground.

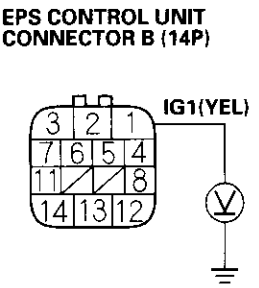


Terminal side of female terminals

*Is there battery voltage?*

**YES** – Check for loose EPS control unit connectors. If necessary, substitute a known-good EPS control unit and recheck.■

**NO** – Check for an open in the wire between the under-dash fuse/relay box and the EPS control unit, and repair it if necessary. If the wire is OK, check for an open circuit inside the under-dash fuse/relay box.■

## DTC Troubleshooting (cont'd)

### DTC 22: Vehicle Speed Signal

NOTE:
- If the MIL indicator is ON, troubleshoot the PGM-FI system first.
- When the engine is running at 2,000 rpm or above and the vehicle speed is 0.62 mph (1 km/h) or below for 3 minutes, the EPS indicator comes on.

1. Test-drive the vehicle.

   *Is the vehicle speedometer working correctly?*

   **YES** – Go to step 2.

   **NO** – Perform the speedometer system troubleshooting (see page 22-53). ■

2. Turn the ignition switch OFF.
3. Block the front wheels and release the parking brake.
4. Raise the vehicle, and make sure it is securely supported.
5. Disconnect EPS control unit connector B (14P).
6. Block the right rear wheel, and slowly rotate the left rear wheel and measure the voltage between EPS control unit connector B (14P) terminal No. 2 and body ground.

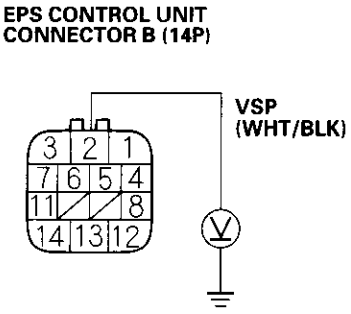


Terminal side of female terminals

*Does the voltage pulse 0 V and 5 V ?*

**YES** – Check for loose EPS control unit connectors. If necessary, substitute a known-good EPS control unit and recheck. ■

**NO** – Repair open or short to body ground in the wire between the EPS control unit and body ground, or faulty the speedometer. ■

## DTC 23: Engine Speed Signal

NOTE: If the MIL indicator is on, troubleshoot the PGM-FI problem first.

1. Start the engine and check the tachometer.

   *Is the tachometer working correctly?*

   **YES** – Go to step 2.

   **NO** – Go to step 5.

2. Connect a commercially available spring scale to the steering wheel.

3. Pull on the scale to measure when the front wheels start to move. If the system is in good condition, the scale should read no more than 34 N (3.5 kgf, 7.7 lbf).

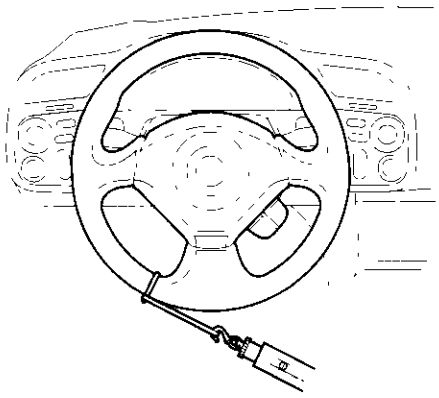

   *Is the measurement within the specification?*

   **YES** – The system is OK at this time. ■

   **NO** – Go to step 4.

4. Test-drive the vehicle with the vehicle above 6.2 mph (10 km/h).

   *Does EPS provide power assist?*

   **YES** – Go to step 5.

   **NO** – Perform the troubleshooting for DTC 22. ■

5. Turn the ignition switch OFF.

6. Disconnect EPS control unit connector B (14P).

7. Start the engine.

8. Measure the voltage between the No. 5 terminal and body ground.

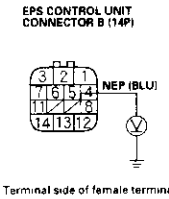


   *Is there about 3 to 6 volts?*

   **YES** – Check for loose EPS control unit connectors. If necessary, substitute a known-good EPS control unit and recheck. ■
   **NO** – Go to step 9.

9. Turn the ignition switch OFF.
10. Disconnect ECM connector A (32P).
11. Check for continuity between ECM connector terminal A19 and EPS control unit (14P) connector terminal No. 5.

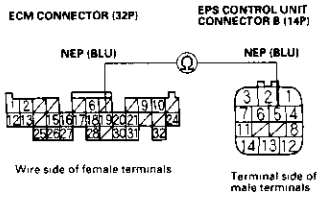


   *Is there continuity?*

   **YES** – Go to step 12.
   **NO** – Repair the open in the wire between the EPS control unit and the ECM. ■

12. Disconnect gauge assembly connector C (20P).
13. Check for continuity between EPS control unit connector terminal No. 5 and body ground.

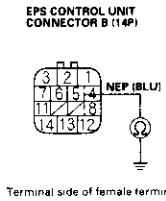


   *Is there continuity?*

   **YES** – Repair the short in the wire between the EPS control unit and the ECM. ■
   **NO** – Check for loose EPS control unit connectors. If necessary, substitute a known-good EPS control unit and recheck. ■

## DTC Troubleshooting (cont'd)

### **DTC 30:** Sub-Microcomputer

1. Clear the DTC.
2. Start the engine.
3. Wait at least 10 seconds.

   *Does the EPS indicator come on?*

   **YES** – Go to step 4.

   **NO** – Check for loose wires or poor connections. If the connections are good, the system is OK at this time. ■
4. Verify the DTC.

   *Is DTC 30 indicated?*

   **YES** – Check for loose EPS control unit connectors. If necessary, substitute a known-good EPS control unit and recheck. ■

   **NO** – Perform the appropriate troubleshooting for the code indicated. ■

### **DTC 31, 32, 33:** Motor Current Sensor

1. Clear the DTC.
2. Start the engine.
3. Wait at least 10 seconds.

   *Does the EPS indicator come on?*

   **YES** – Go to step 4.

   **NO** – Check for loose wires or poor connections. If the connections are good, the system is OK at this time. ■
4. Verify the DTC.

   *Is DTC 31, 32, or 33 indicated?*

   **YES** – Check for loose EPS control unit connectors. If necessary, substitute a known-good EPS control unit and recheck. ■

   **NO** – Perform the appropriate troubleshooting for the code indicated. ■

## **DTC 34, 35:** EPS Control Unit Internal Circuit

1. Clear the DTC.
2. Start the engine.
3. Wait at least 10 seconds.

   *Does the EPS indicator come on?*

   **YES** – Go to step 4.

   **NO** – Check for loose wires or poor connections. If the connections are good, the system is OK at this time. ■
4. Verify the DTC.

   *Is DTC 34 or 35 indicated?*

   **YES** – Check for loose EPS control unit connectors. If necessary, substitute a known-good EPS control unit and recheck. ■

   **NO** – Perform the appropriate troubleshooting for the code indicated. ■

## **DTC 36:** Charge of the Motor Voltage

1. Clear the DTC.
2. Start the engine.
3. Turn the steering wheel to right or left, and wait 10 seconds or more.

   *Does the EPS indicator come on?*

   **YES** – Go to step 4.

   **NO** – Check for loose wires or poor connections. If the connections are good, the system is OK at this time. ■
4. Stop the engine, and verify the DTC.

   *Is DTC 36 indicated?*

   **YES** – Go to step 5.

   **NO** – Perform the appropriate troubleshooting for the code indicated. ■
5. Check the EPS (70 A) fuse in the auxiliary under-hood fuse box, and reinstall the fuse if it is OK.

   *Is the fuse OK?*

   **YES** – Go to step 6.

   **NO** – Replace the fuse recheck. ■
6. Disconnect EPS control unit connector C (2P).

(cont'd)

## DTC Troubleshooting (cont'd)

7. Measure the voltage between terminal No. 2 and body ground.

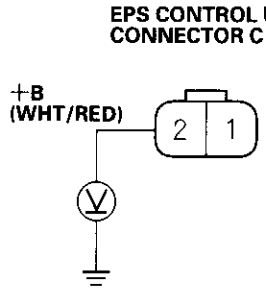


Terminal side of female terminals

*Is there battery voltage?*

**YES** – Check for loose EPS control unit connectors. If necessary, substitute a known-good EPS control unit and recheck. ■

**NO** – Repair open in the wire between the EPS (70 A) fuse and the EPS control unit. ■

### DTC 37: Motor Voltage

1. Check the EPS (70 A) fuse in the auxiliary under-hood fuse box, and reinstall the fuse if it is OK.

   *Is the fuse OK?*

   **YES** – Go to step 2.

   **NO** – Replace the fuse and recheck. ■

2. Check for continuity between EPS control unit connector C (2P) terminal No. 1 and body ground.

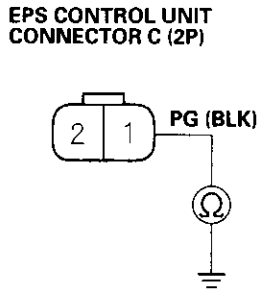


Terminal side of female terminals

*Is there continuity?*

**YES** – Go to step 3.

**NO** – Repair open in the wire between the EPS control unit and body ground (G351). ■

3. Disconnect EPS control unit connector A (2P) and the motor 2P connector.

4. Check for continuity between EPS control unit connector A (2P) terminal No. 2 and motor 2P connector terminal No. 1.

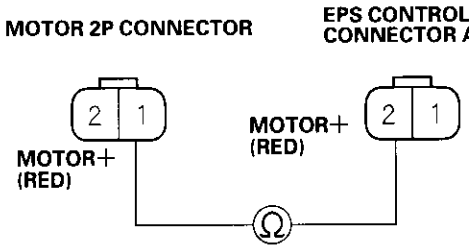


Terminal side of female terminals

*Is there continuity?*

**YES** – Go to step 5.

**NO** – Repair open in the RED wire between the EPS control unit and the motor. ■

5. Check for continuity between EPS control unit connector A (2P) terminal No. 1 and motor 2P connector terminal No. 2.

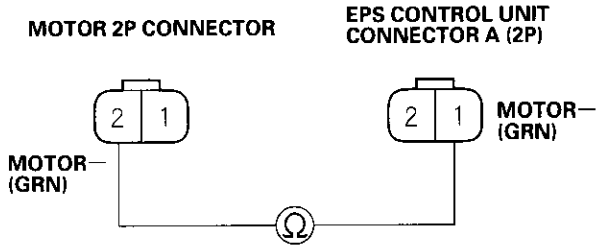


Terminal side of female terminals

*Is there continuity?*

**YES** – Go to step 6.

**NO** – Repair open in the GRN wire between the EPS control unit and the motor. ■

6. Check for continuity between EPS control unit connector A (2P) terminal No. 1 and body ground.

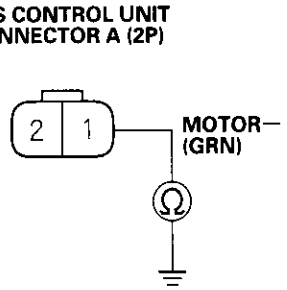


Terminal side of female terminals

*Is there continuity?*

**YES** – Repair short to body ground in the GRN wire between the EPS control unit and the motor. ■

**NO** – Go to step 7.

7. Check for continuity between EPS control unit connector A (2P) terminal No. 2 and body ground.

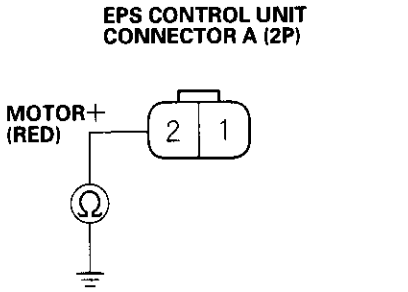


Terminal side of female terminals

*Is there continuity?*

**YES** – Repair short to body ground in the RED wire between the EPS control unit and the motor. ■

**NO** – Check for loose EPS control unit connectors. If necessary, substitute a known-good EPS control unit and recheck. ■

## DTC Troubleshooting (cont'd)

**DTC 50 to 62:** Central Processing Unit (CPU)

1. Clear the DTC.
2. Start the engine.
3. Wait at least 10 seconds.

   *Does the EPS indicator come on?*

   **YES** – Go to step 4.

   **NO** – Check for loose wires or poor connections. If the connections are good, the system is OK at this time. ■
4. Verify the DTC.

   *Is DTC 50 to 62 indicated?*

   **YES** – Check for loose EPS control unit connectors. If necessary, substitute a known-good EPS control unit and recheck. ■

   **NO** – Perform the appropriate troubleshooting for the code indicated. ■

## EPS Indicator Circuit Troubleshooting

1. Turn the ignition switch ON (II), start the engine, and watch the EPS indicator.

   *Does the EPS indicator come on?*

   **YES** – If the EPS indicator comes on and goes off, it's OK. If the EPS indicator stays on or blinks, go to step 13.

   **NO** – Go to step 2.
2. Turn the ignition switch OFF, then ON (II) again, and watch the brake system indicator.

   *Does the brake system indicator come on?*

   **YES** – Go to step 3.

   **NO** – Repair open in the indicator power source circuit. ■
   - Blown INSTRUMENT LIGHT (7.5 A) fuse.
   - Open in the wire between the INSTRUMENT LIGHT (7.5 A) fuse and gauge assembly.
   - Open circuit inside the under-dash fuse/relay box.
3. Turn the ignition switch OFF.
4. Check the EPS indicator bulb in the gauge assembly.

   *Is the bulb OK?*

   **YES** – Go to step 5.

   **NO** – Replace the EPS indicator bulb. ■
5. Turn the ignition switch ON (II).

6. Connect gauge assembly connector A (14P) terminal No. 14 to body ground with a jumper wire.

**GAUGE ASSEMBLY CONNECTOR A (14P)**

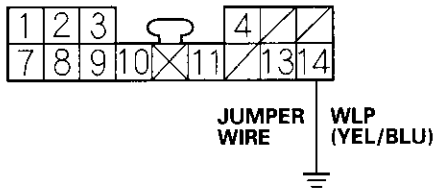


Wire side of female terminals

*Does the EPS indicator come on?*

**YES** – Go to step 7.

**NO** – Replace the bulb circuit board in the gauge assembly. ■

7. Turn the ignition switch OFF.
8. Disconnect EPS control unit connector B (14P).
9. Turn the ignition switch ON (II).
10. Connect EPS control unit connector B (14P) terminal No. 12 and body ground with a jumper wire.

**EPS CONTROL UNIT CONNECTOR B (14P)**

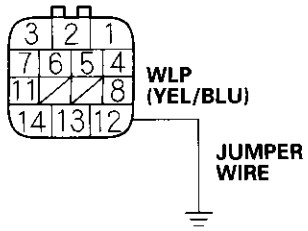


Terminal side of female terminals

*Does the EPS indicator come on?*

**YES** – Go to step 11.

**NO** – Repair open in the wire between the gauge assembly and the EPS control unit. ■

11. Check for continuity between body ground and EPS control unit connector B (14P) terminals No. 4 and No. 6 individually.

**EPS CONTROL UNIT CONNECTOR B (14P)**

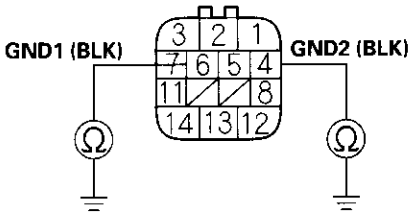


Terminal side of female terminals

*Is there continuity?*

**YES** – Go to step 12.

**NO** – Repair open in the wires between the EPS control unit and body ground (G201 and G402). ■

12. Measure the voltage between EPS control unit connector B (14P) terminal No. 1 and body ground.

**EPS CONTROL UNIT CONNECTOR B (14P)**

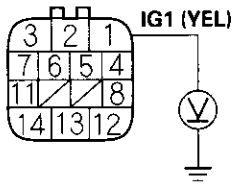


Terminal side of female terminals

*Is there battery voltage?*

**YES** – Check for loose EPS control unit connectors. If necessary, substitute a known-good EPS control unit and recheck. ■

**NO** – Repair open in the wire between the INSTRUMENT LIGHT (7.5 A) fuse and the EPS control unit. ■

(cont'd)

## EPS Indicator Circuit Troubleshooting (cont'd)

13. Turn the ignition switch OFF.

14. Disconnect EPS control unit connector B (14P).

15. Disconnect the connectors from the following units.
    - ECM (32P)
    - ABS control unit
    - SRS control unit

16. Check for continuity between EPS control unit connector B (14P) terminal No. 8 and body ground.

**EPS CONTROL UNIT CONNECTOR B (14P)**

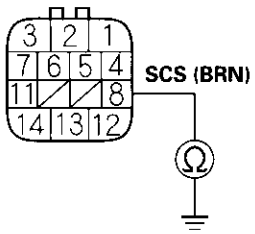


Terminal side of female terminals

*Is there continuity?*

**YES** – Repair short to body ground in the SCS circuit. ■

**NO** – Go to step 17.

17. Turn the ignition switch OFF, then remove the Honda PGM Tester.

18. Connect EPS control unit connector B (14P).

19. Turn the ignition switch ON (II).

20. Measure the voltage between data link connector (16P) terminal No. 1 and body ground.

**DATA LINK CONNECTOR (16P)**

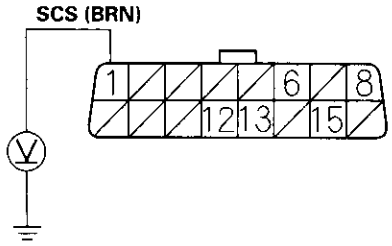


Wire side of female terminals

*Is there about 6 V?*

**YES** – Go to step 21.

**NO** – Repair open in the wire between the data link connector (16P) and the EPS control unit. ■

21. Turn the ignition switch OFF.

22. Connect all disconnected connectors.

23. Disconnect EPS control unit connector B (14P).

24. Turn the ignition switch ON (II), and start the engine.

*Does the EPS indicator go off?*

**YES** – Go to step 25.

**NO** – Repair short to body ground in the wire between the EPS indicator and the EPS control unit. ■

25. Inspect the bulb circuit board in the gauge assembly (see page 22-47).

*Is it normal?*

**YES** – Check for loose EPS control unit connectors. If necessary substitute a known-good EPS control unit and recheck. ■

**NO** – Replace the bulb circuit board in the gauge assembly. ■

## Memorizing the Torque Sensor Neutral Position

The torque sensor neutral position must be memorized whenever the gearbox is removed or installed, or when the torque sensor or EPS control unit is replaced. Note that the torque sensor neutral position is not affected when erasing the DTC.

1. With the ignition switch OFF, connect the Honda PGM tester (A) to the 16P Data Link Connector (DLC) (B) located under the dash on the passenger's side of the vehicle.

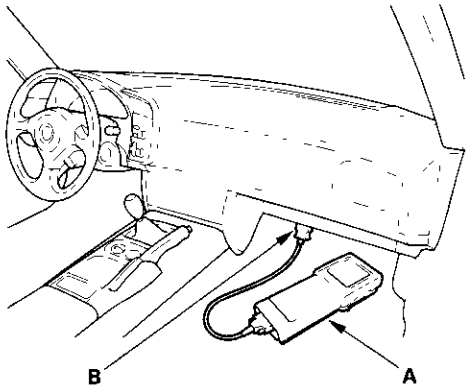


2. With the vehicle on the ground, set the front wheels in the straight ahead driving position.

3. Short the SCS circuit to body ground using the Honda PGM Tester.

4. Turn the steering wheel 45 degrees to the left from the straight ahead driving position, and hold the steering wheel in that position.

5. Turn the ignition switch ON (II). The EPS indicator comes on, then it goes off after 4 seconds.

6. Within 4 seconds after the EPS indicator goes off, return the steering wheel to the straight ahead driving position and release the steering wheel. The EPS indicator comes on again 4 seconds after releasing the steering wheel.

7. Within 4 seconds after the EPS indicator comes on, turn the steering wheel 45 degrees to the left again and hold it in that position.
   The EPS indicator goes off after 4 seconds.

8. Within 4 seconds after the EPS indicator goes off, return the steering wheel to the straight ahead driving position and release the steering wheel. Do not move the steering wheel before turning the ignition switch OFF.
   NOTE: If the steering wheel is moved, the torque sensor neutral position cannot be written to memory.

9. The EPS indicator blinks twice 4 seconds after releasing the steering wheel, then it blinks three times 5 seconds after. Then, the indicator goes off. The torque sensor neutral position is memorized.

   NOTE: If the EPS indicator stays on, there was an error in writing the torque sensor neutral position to memory. Repeat the procedure starting from step 3.

10. Turn the ignition switch OFF.

11. Disconnect the Honda PGM Tester from the DLC.

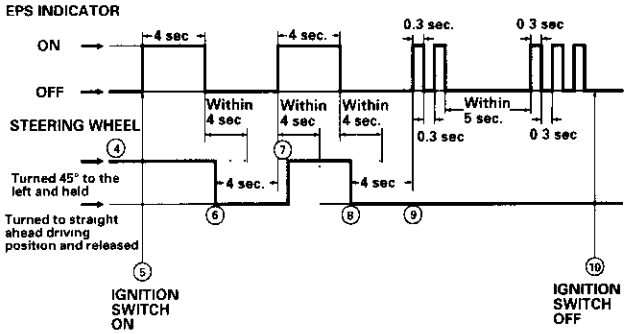

## Steering Gearbox Removal and Installation

**Special Tools Required**
Ball joint remover, 28 mm 07MAC-SL00200

### Removal

Note these items during removal:

- Using solvent and a brush, wash any oil and dirt off the gearbox. Blow dry with compressed air.
- Be sure to remove the steering wheel before disconnecting the steering joint. Damage to the cable reel can occur.

1. Make sure you have the anti-theft code for the radio, then write down the frequencies for the radio preset buttons. Disconnect the negative cable from the battery.
2. Raise the vehicle, and make sure it is securely supported.
3. Remove the front wheels.
4. Remove the driver's airbag (see page 23-65).
5. Remove the steering wheel (see page 17-6).
6. Place a mark (A) on the steering joint (B) and the pinion shaft (C) to identify the position of the joint on the pinion shaft.

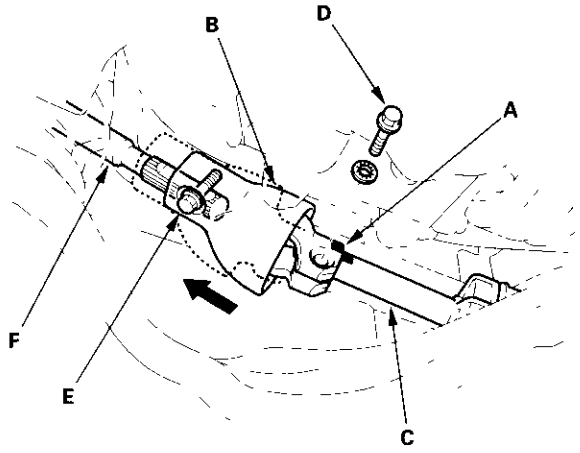


7. Remove the lower joint bolt (D) from the steering joint.
8. Loosen the upper joint bolt (E) on the steering joint, and pull the steering joint fully to the steering shaft (F) side.
9. From the under the dashboard; loosen the joint bolt (A) on the column, and pull the steering shaft (B) fully to the column side.

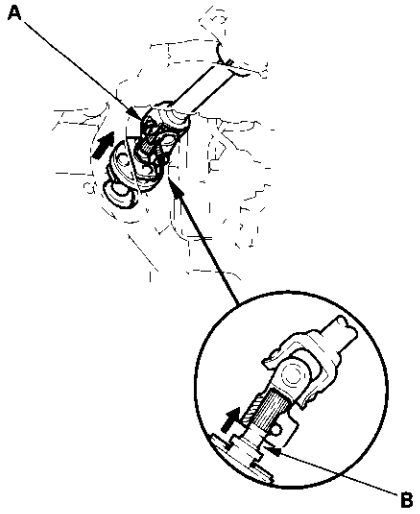


10. From the engine compartment; disconnect the steering joint (A) and pinion shaft (B) by moving the steering joint toward the steering shaft (C).

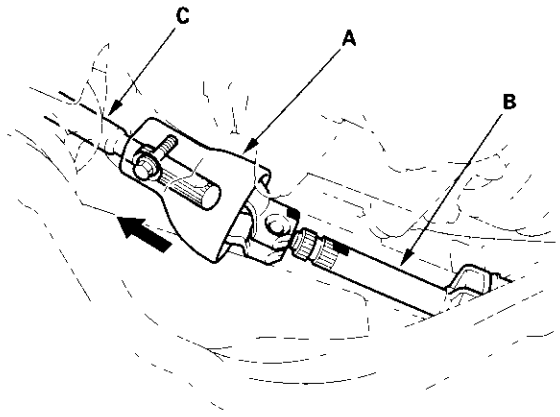

11. Remove and discard the cotter pin (A) from the 12 mm nut (B), then remove the nut.

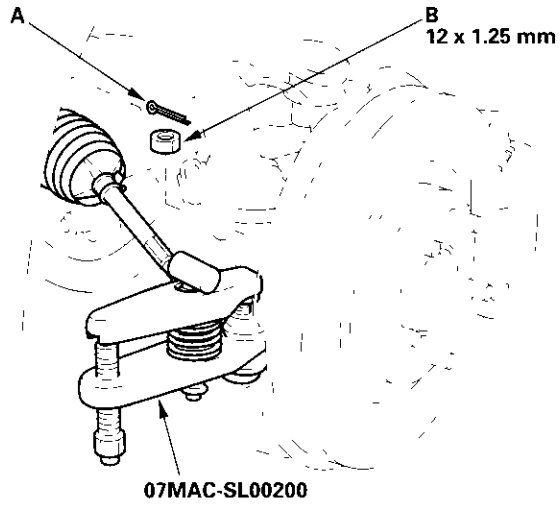


12. Separate the tie-rod ball joint and knuckle using the special tool (see page 18-10).

13. Remove the seven clips (A) and the two flange bolts (B), then remove the splash shield (C).

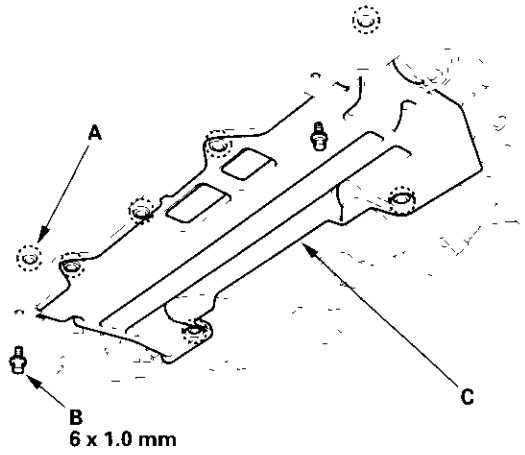


14. Remove the stabilizer bar holder brackets (A) from the frame, and lower the stabilizer bar (B).

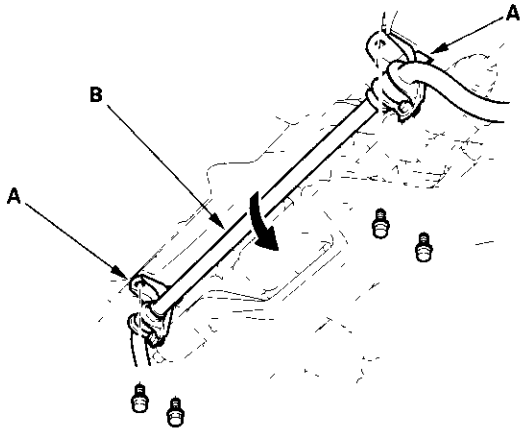


15. Disconnect the ground cable (A) and motor 2P connector (B). Loosen the harness band (C), and release the wire harness (D) from the gearbox. After disconnecting the connector, put a piece of tape over the steering gearbox connector to protect it from dust, dirt, and foreign materials.

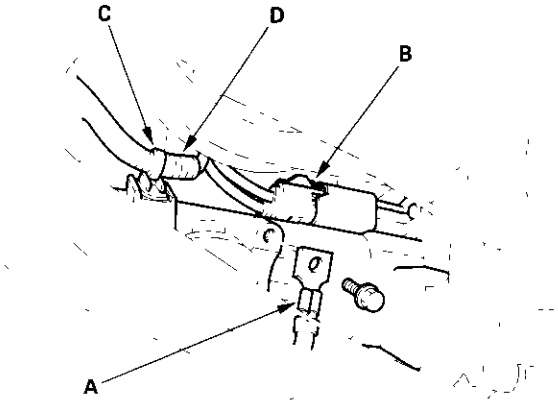


(cont'd)

## Steering Gearbox Removal and Installation (cont'd)

16. Disconnect the torque sensor 3P connector (A). After disconnecting the connector, put a piece of tape over the steering gearbox connector to protect it from dust, dirt, and foreign materials.

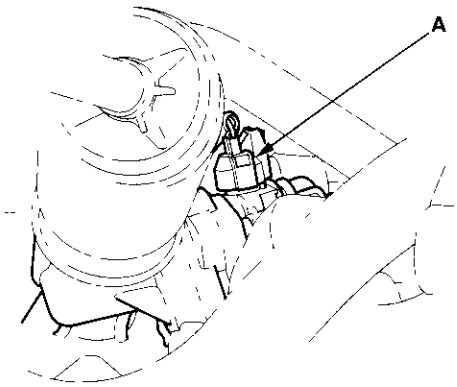


17. Remove the four gearbox mounting bolts.

**Right side:**

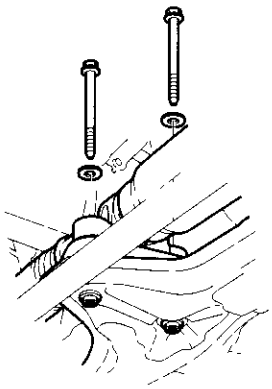

**Left side:**

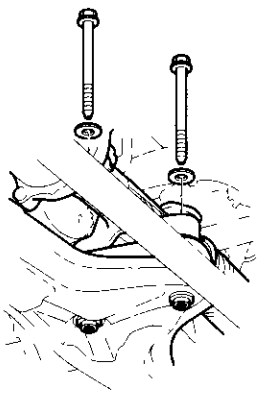

18. Pull the steering gearbox toward the front. Move the steering gearbox to the passenger's side and remove it.

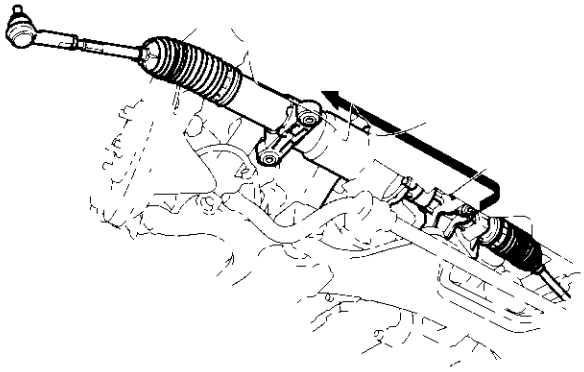

## Installation

1. Before installing the gearbox, center the steering rack within its stroke.

2. Pass the driver's side of the steering gearbox through the left wheel housing. Place the steering gearbox on the front subframe, and move it into the original position.

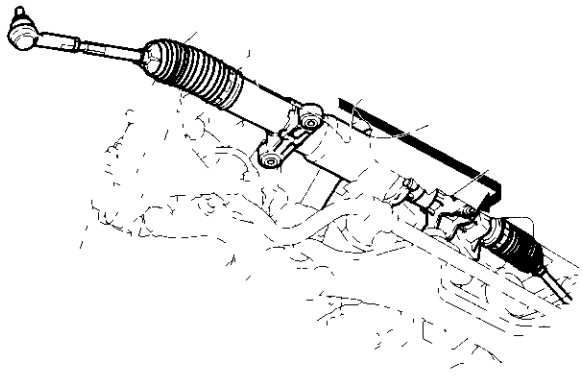

3. Install the four gearbox mounting bolts.

**Right side:**

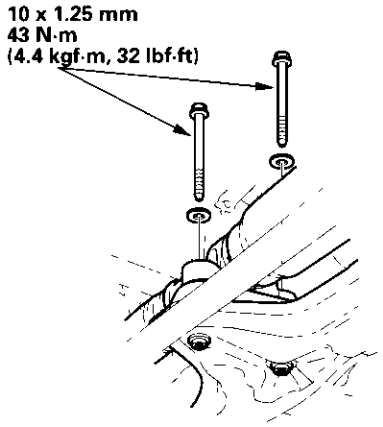


**Left side:**

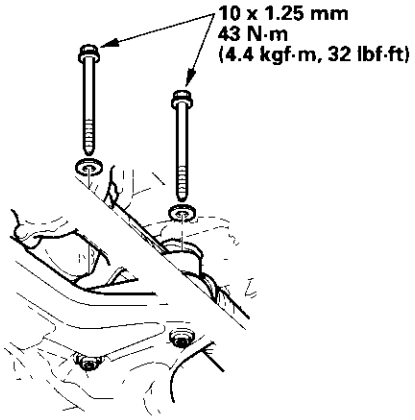


(cont'd)

## Steering Gearbox Removal and Installation (cont'd)

4. Connect the torque sensor 3P connector (A).

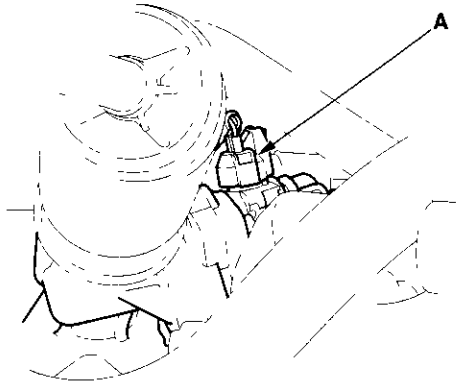


5. Connect the motor 2P connector (A) and ground cable (B). Secure the wire harness (C) with the harness band (D).

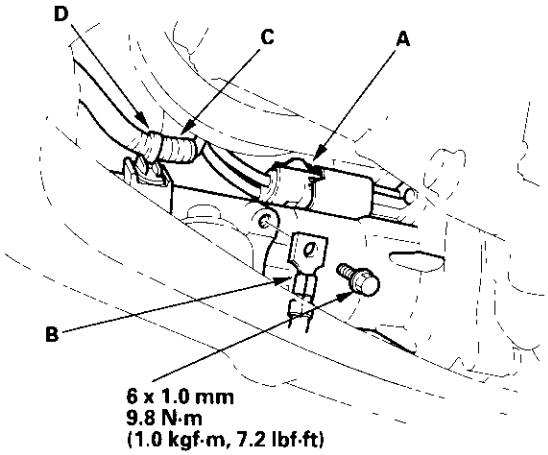


6. Raise the stabilizer bar (A) to the original position, and install the stabilizer bar holder bracket (B).

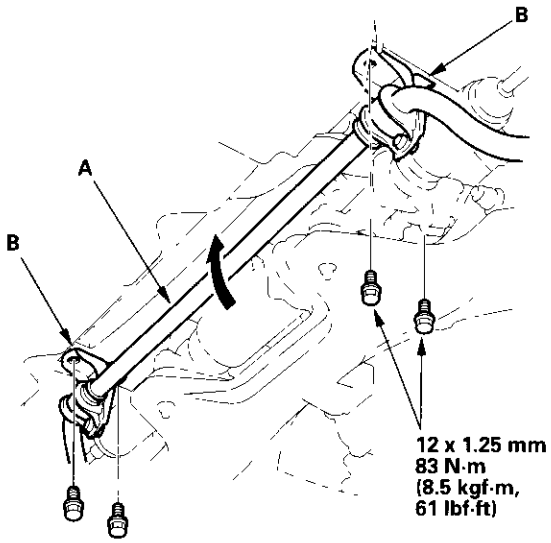


7. Install the splash shield (A) with the seven clips (B) and two flange bolts (C).

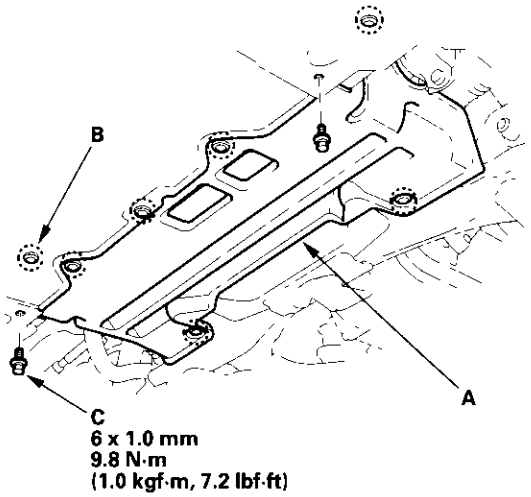

8. Wipe off any grease contamination from the ball joint tapered section and threads. Then reconnect the tie-rod ends (A) to the steering knuckles (B), and tighten the 12 mm nut (C) to the specified torque.

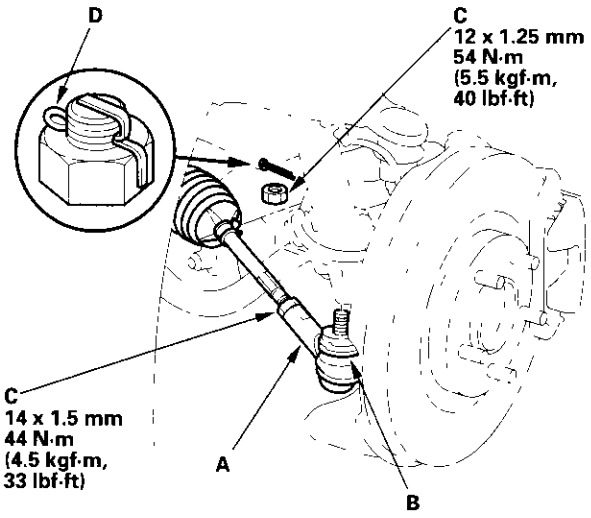


9. Install the new cotter pins (D), and bend them as shown.

10. From the engine compartment, slip the lower end (A) of the steering joint (B) by aligning the marks (C) on the pinion shaft (D) and joint.

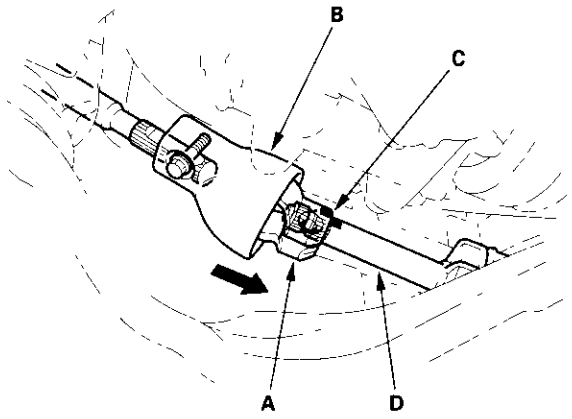


11. From the under the dashboard, push the steering shaft (A) fully to engine compartment side, but do not push excessively on the steering shaft. Then tighten the joint bolt (B) to the specified torque.

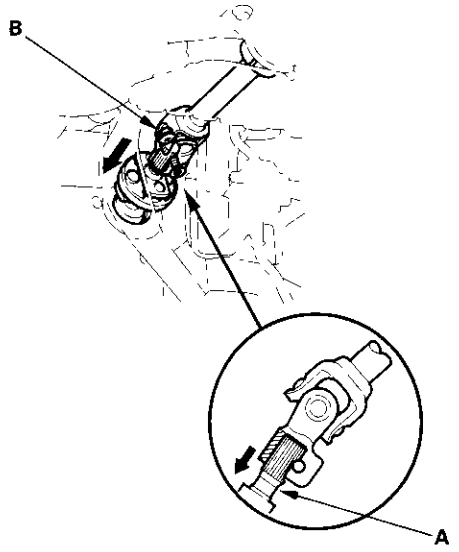


12. Line up the bolt hole (A) with the groove around (B) the pinion shaft, and install the lower joint bolt (C) and the upper joint bolt (D) to the specified torque.

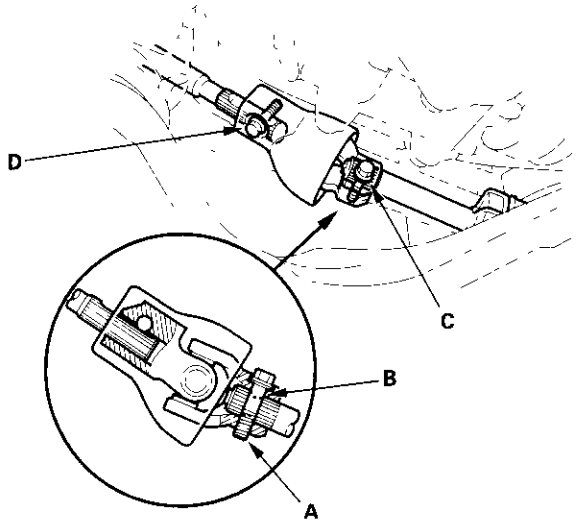


**US thru VIN JHMAP 114-YT008411**
**Canada thru VIN JHMAP 114-YT800750**
**Torque: 22 N·m (2.2 kgf·m, 16 lbf·ft)**

**US from VIN JHMAP 114-YT008412**
**Canada from VIN JHMAP 114-YT800751**
**Torque: 29 N·m (3.0 kgf·m, 22 lbf·ft)**

(cont'd)

## Steering Gearbox Removal and Installation (cont'd)

13. Install the steering wheel (see page 17-8).
14. Install the driver's airbag (see page 23-65).
15. Reconnect the negative cable to the battery.
16. Install the front wheels, and adjust the front wheel alignment (see page 18-5).
17. After installation, perform the following checks.

- Make sure the steering gearbox wires are not caught or pinched by any parts.
- Make sure the steering gearbox connectors are properly connected.
- Turn the ignition switch ON (II), and check that the EPS indicator goes off.
- If you replaced the steering gearbox assembly, let the EPS control unit memorize the torque sensor neutral position (see page 17-45).
- Test-drive the vehicle;
  - Check that the EPS indicator light does not come on.
  - Check the steering wheel spoke angle. Recheck and adjust the front wheel alignment, if necessary.
- Reset the radio presets.
- For '01-03 models; set the clock.

## Steering Gearbox Overhaul

### Exploded View

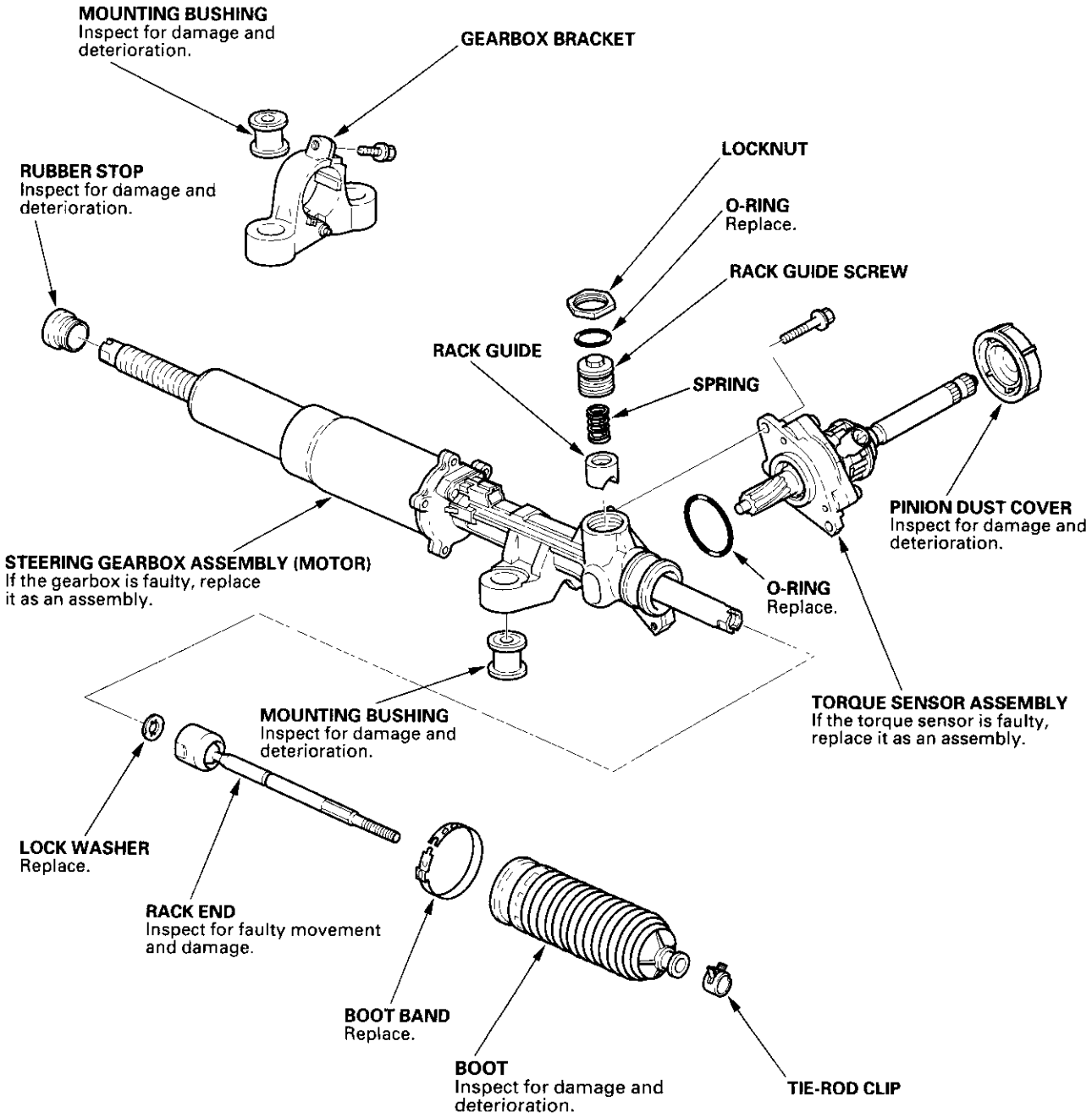

## Torque Sensor Replacement

Note these items during replacement:

- Do not allow dust, dirt, or other foreign materials to enter the gearbox.
- Do not try to disassemble the torque sensor assembly. If the torque sensor is faulty, replace it as an assembly.
- If the torque sensor is replaced, the EPS control unit must memorize the torque sensor neutral position (see page 17-45).

1. Center the steering rack within its stroke.
2. Remove the torque sensor assembly (A).

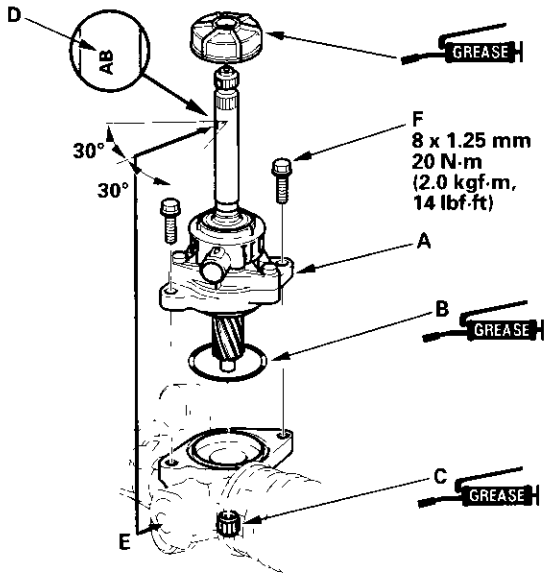


3. Coat the new O-ring (B) with multipurpose grease, and carefully fit it on the torque sensor housing.
4. Apply multipurpose grease to the needle bearing (C) in the gearbox housing.
5. Install the torque sensor assembly (A) on the gearbox housing by engaging the gear.
   The alphabet stamping (for example "AB") (D) on the pinion shaft aligns with the rack guide screw (E) when the rack is in the straight ahead driving position.
   When installing the torque sensor assembly, make sure the "alphabet" stamping ("AB") is within the range shown.
6. Tighten the 8 mm flange bolts (F).

## Rack Guide Removal/Installation

NOTE: During removal/installation, do not allow dust, dirt, or other foreign materials to enter the gearbox.

1. Loosen the locknut (A), then remove the rack guide screw (B), spring (C), and rack guide (D).

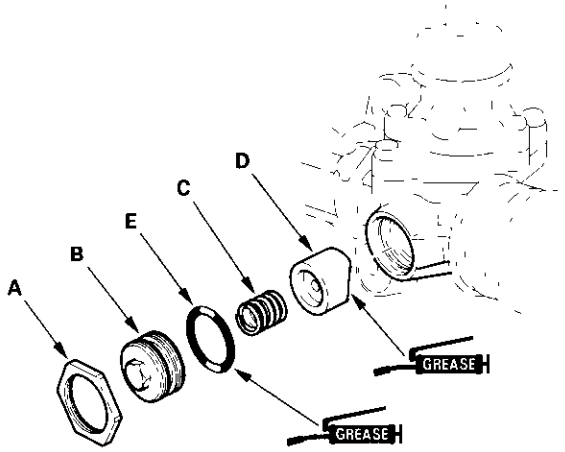


2. Apply multipurpose grease to the sliding surface of the rack guide, and install it onto the gearbox housing.
3. Coat the new O-ring (E) with multipurpose grease, and carefully fit it on the rack guide screw groove.
4. Install the spring, rack guide screw, and locknut.
5. Adjust the rack guide screw (see page 17-14). After adjusting, check that the rack moves smoothly by sliding the rack right and left.

# Rack End Removal and Installation

**Special Tools Required**
- Attachment, 32 x 35 mm 07746-0010100
- Driver, 07749-0010000

## Removal

Note these items during removal/installation:

- Do not allow dust, dirt, or other foreign materials to enter the gearbox.
- Do not disassemble the steering gearbox assembly (motor). If the motor is faulty, replace it as an assembly.

1. Remove the boot bands (A) and discard them. Remove the tie-rod clips (B), and pull the boots away from the ends of the gearbox.

   NOTE: After removing the boot, check for water, dirt, or other foreign matter on the ball screw surface (C) and interior of the boot. If contaminated, clean the ball screw, gearbox housing, and boot completely.

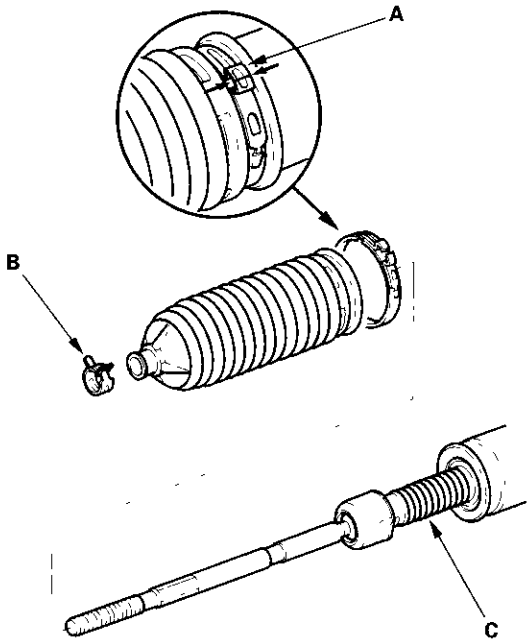


2. Unbend the lock washer.

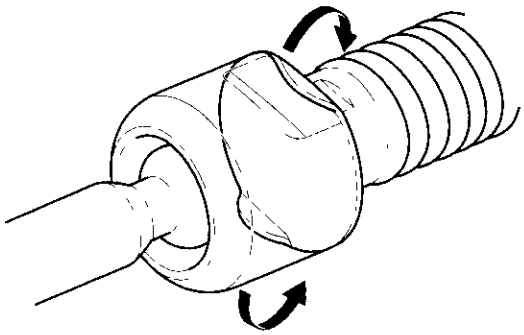

3. Hold the flat surface sections (A) on the passenger's side steering rack shaft with one wrench, and unscrew both rack ends (B) with another wrench. Be careful not to damage the shaft surface with the wrench. Remove the lock washer (C) and discard it.

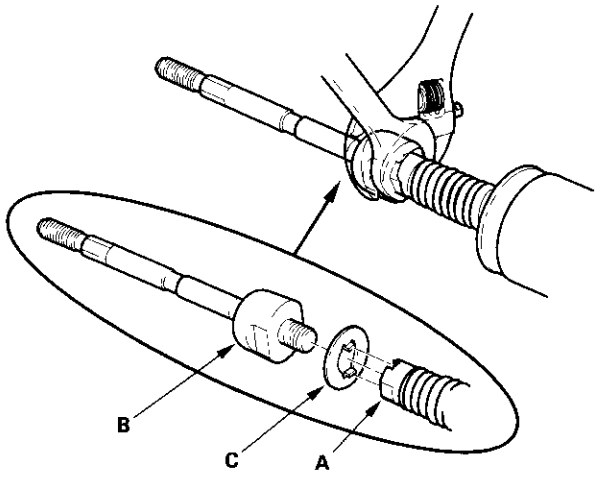


(cont'd)

## Rack End Removal and Installation (cont'd)

4. Check the rubber stop (A) for damage or deterioration. If the rubber stop is damaged or deteriorated, replace it.
   Grasp the left rack end, and pull the rack shaft all the way to the left. Carefully remove the rubber stop by prying it out of the gearbox housing (B) with a flat tip screwdriver (C) on the cut-out portion (D) so as not to damage the housing.

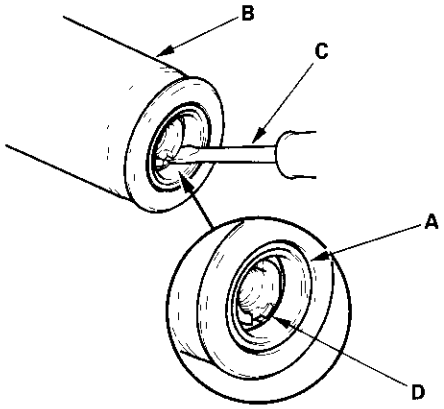


5. If the rubber stop was removed, position the new rubber stop (A) in the gearbox housing, then drive it in using the special tools as shown. Make sure that the special tool presses against the metal portion (B) of the rubber stop.

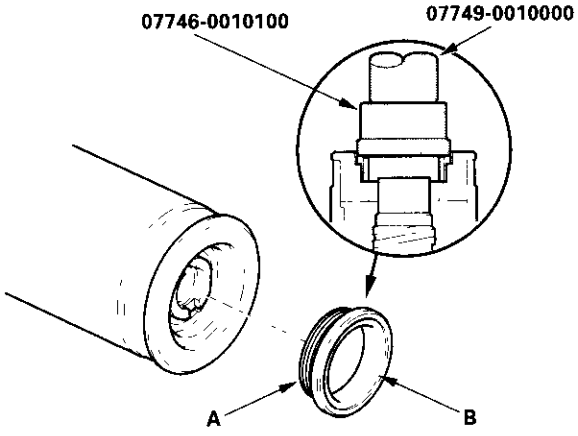


### Installation

1. Install the new lock washer (A) on the rack shaft. Align the lock washer tabs (B) with slots (C) in the rack shaft. Install the rack end (D) while holding with lock washer in place. Repeat this step for the other side of the rack shaft.

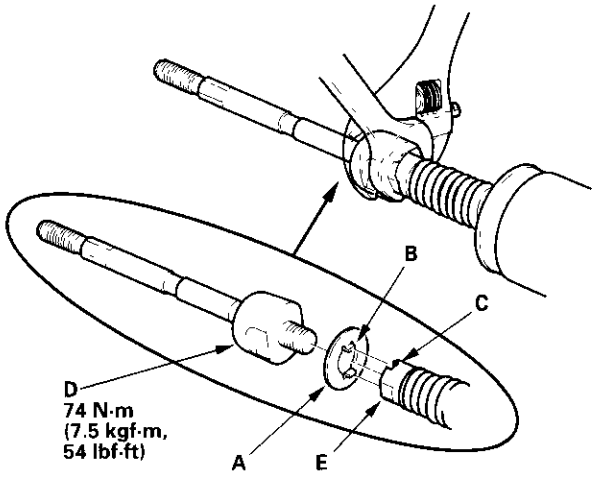


2. Hold the flat surface sections (E) on the passenger's side of the steering rack shaft with a wrench, and tighten both rack ends. Be careful not to damage the shaft surface with the wrench.

3. Bend the lock washer (A) back against the flat spots on the rack end joint housing.

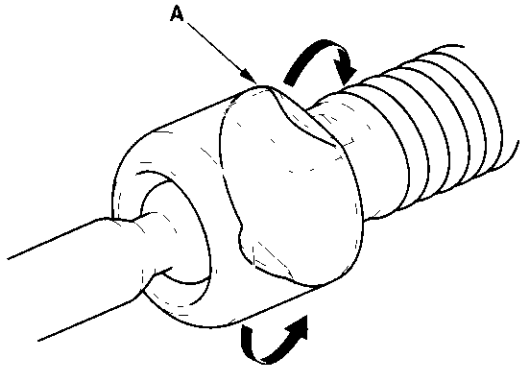

4. Apply multipurpose grease to the circumference (A) of the rack end joint housing.

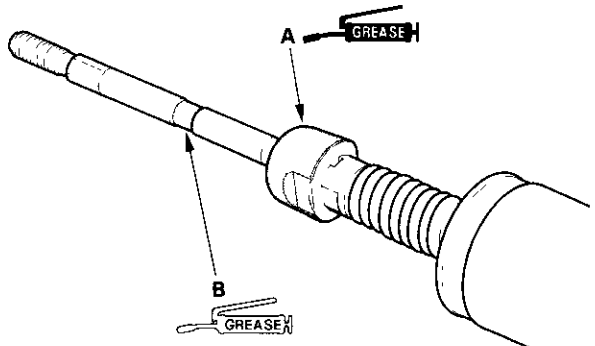


(P/N: 08733-B070E)

5. Apply a light coat of silicone grease to the boot grooves (B) on the rack ends.

6. Center the steering rack within its stroke. Install the boots (A) in the rack end with the tie-rod clips (B). Clean off any grease or contamination from the groove around (C) on housing.

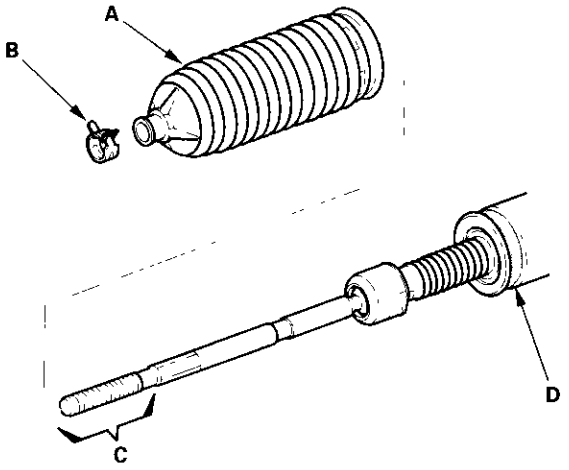


7. After installing the boots, wipe the grease off the thread section (D) of rack end.

8. Install the new boot band (A) by aligning the tabs (B) with holes (C) of the band.

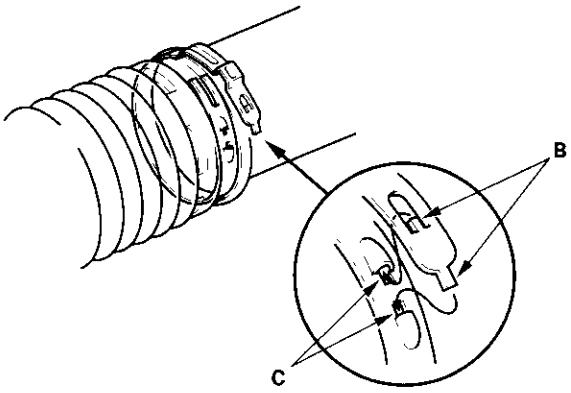


9. Close the ear portion (A) of the band with commercially available pincers, Oetiker 1098 or equivalent (B).

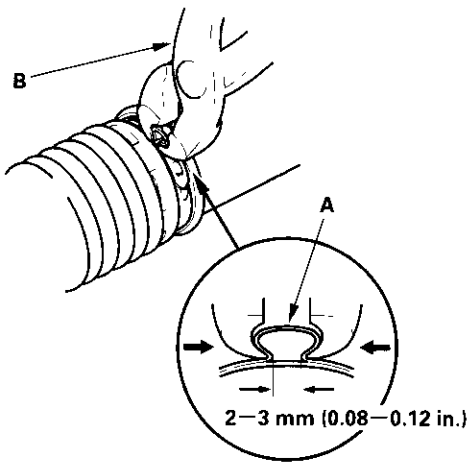


10. Slide the rack right and left to be certain that the boots are not deformed or twisted.

## Gearbox Bracket Removal/ Installation

1. Remove the bracket clamp bolt (A) from the gearbox bracket (B), then pry open the bracket to remove it from the gearbox.

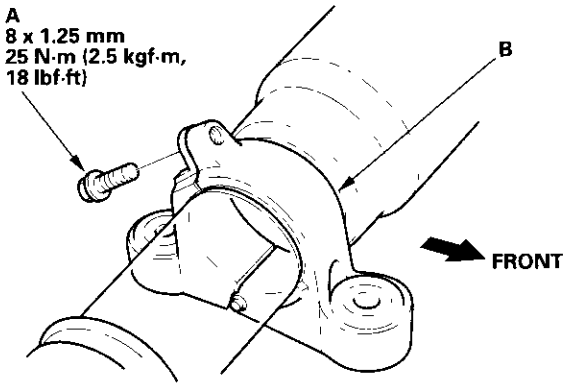


2. Install the gearbox bracket on the gearbox with the bracket clamp bolt toward the rear.

3. Adjust the distance between the bracket mounting bolt hole (A) and the gearbox mounting bolt hole (B) to the dimension shown. Make sure the bracket mounting bolt holes are parallel with gearbox mounting bolt holes.

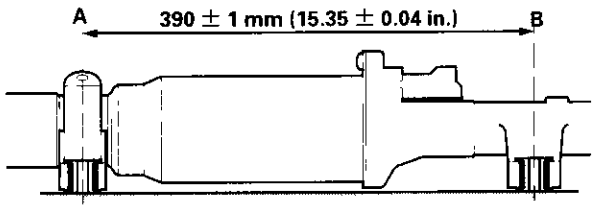


4. Install the bracket clamp bolt, and tighten it to 25 N·m (2.5 kgf·m, 18 lbf·ft).

## Ball Joint Boot Replacement

**Special Tools Required**
Oil seal driver, 07974-6790000

1. Remove the boot from the tie-rod end, and wipe the old grease off the ball pin.

2. Pack the lower area of the ball pin (A) with fresh multipurpose grease.

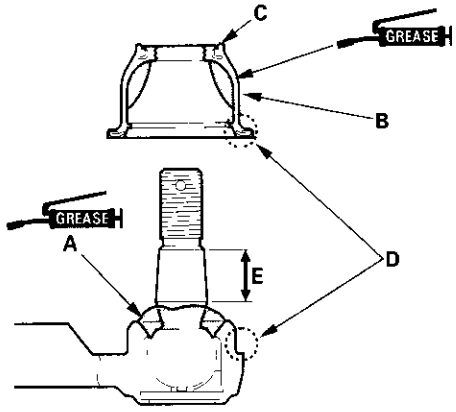


3. Pack the interior of the new boot (B) and lip (C) with fresh multipurpose grease.

   Note these items when installing new grease:
   - Keep grease off the boot installation section (D) and the tapered section (E) if the ball pin.
   - Do not allow dust, dirt, or other foreign materials to enter the boot.

4. Install the new boot (A) using the special tool. The boot must not have a gap at the boot installation sections (B). After installing the boot, check the ball pin tapered section for grease contamination, and wipe it if necessary.

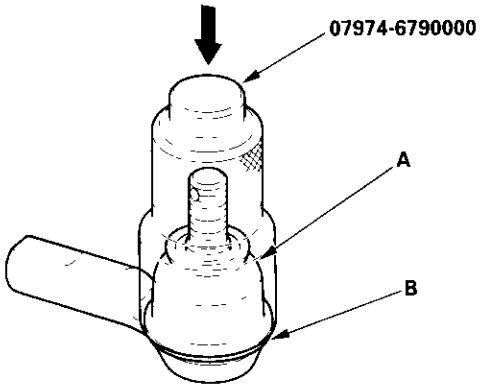

## EPS Control Unit Removal/Installation

1. Make sure you have the anti-theft code for the radio, then write down the frequencies for the radio preset buttons. Remove the battery.

2. Remove the EPS control unit.

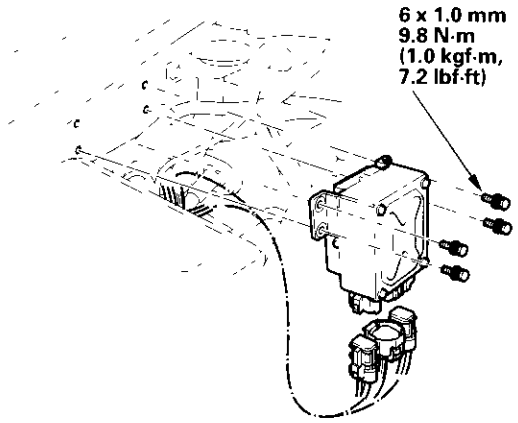


3. Disconnect the EPS control unit connectors.

4. Install the EPS control unit in the reverse order of removal.

   NOTE: If the EPS control unit is replaced, the EPS control unit must memorize the torque sensor neutral position (see page 17-45).

# Suspension

## Front and Rear Suspension


Special Tools ..... 18-2
Component Location Index ..... 18-3
Wheel Alignment ..... 18-5
Wheel Bearing End Play Inspection ..... 18-9
Wheel Runout Inspection ..... 18-9
Ball Joint Removal ..... 18-10


## Front Suspension


Knuckle/Hub Replacement ..... 18-11
Ball Joint Boot Replacement ..... 18-16
Stabilizer Bar Replacement ..... 18-17
Stabilizer Link Removal/Installation ..... 18-18
Lower Arm Removal/Installation ..... 18-19
Upper Arm Replacement ..... 18-20
Damper/Spring Replacement ..... 18-22


## Rear Suspension


Knuckle/Hub Replacement ..... 18-28
Ball Joint Boot Replacement ..... 18-33
Stabilizer Bar Replacement ..... 18-34
Stabilizer Link Removal/Installation ..... 18-34
Lower Arm Removal/Installation ..... 18-35
Upper Arm Removal/Installation ..... 18-37
Control Arm Replacement ..... 18-38
Damper/Spring Replacement ..... 18-39


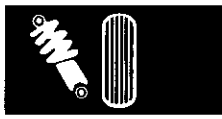

## Special Tools

| Ref.No. | Tool Number | Description | Qty |
|---|---|---|---|
| ① | 07GAF-SD40100 | Hub Dis/Assembly Tool, 42 mm | 1 |
| ② | 07GAF-SD40200 | Hub Dis/Assembly Tool | 1 |
| ③ | 07GAG-SD40700 | Ball Joint Boot Clip Guide, 42 x 44 mm | 1 |
| ④ | 07JAF-SH20330 or 07933-HB3000A without adjusting bolt | Bushing Base | 1 |
| ⑤ | 07MAC-SL00200 | Ball Joint Remover, 28 mm | 1 |
| ⑥ | 07746-0010400 | Attachment, 52 x 55 mm | 1 |
| ⑦ | 07746-0010500 | Attachment, 62 x 68 mm | 1 |
| ⑧ | 07746-0010600 | Attachment, 72 x 75 mm | 1 |
| ⑨ | 07749-0010000 | Driver, 15 x 135L | 1 |
| ⑩ | 07965-SD90100 | Support Base | 1 |

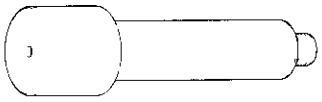

①

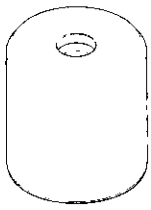

②



③

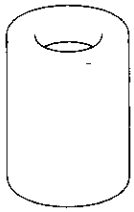

④

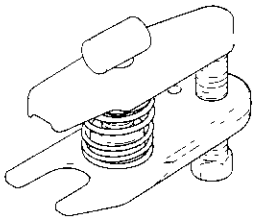

⑤

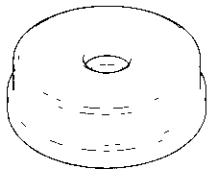

⑥, ⑦, ⑧

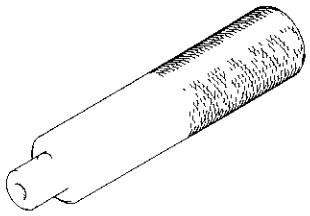

⑨

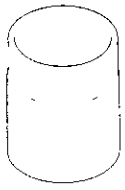

⑩

# Component Location Index

**Front Suspension:**

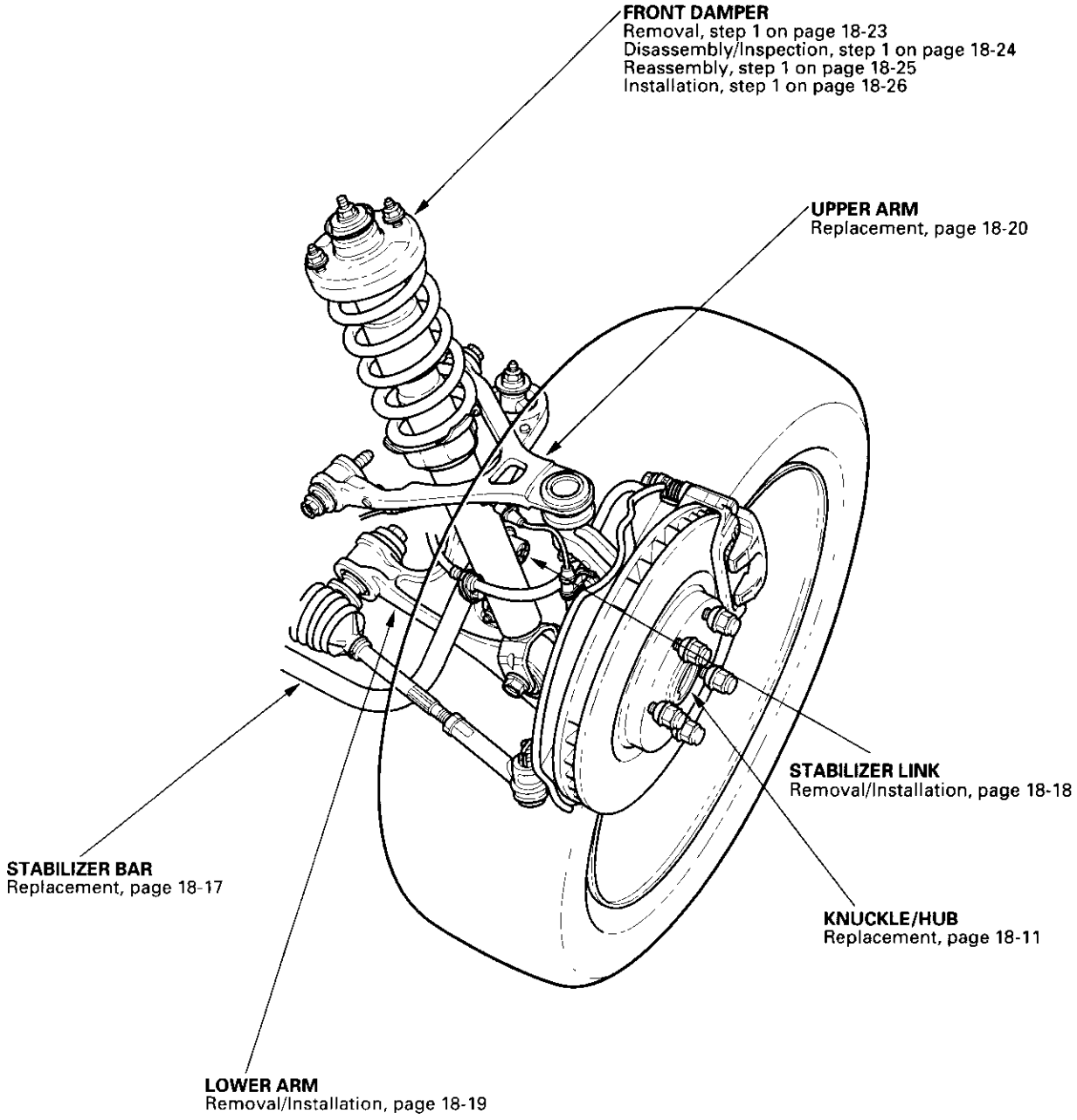

## Component Location Index (cont'd)

**Rear Suspension:**

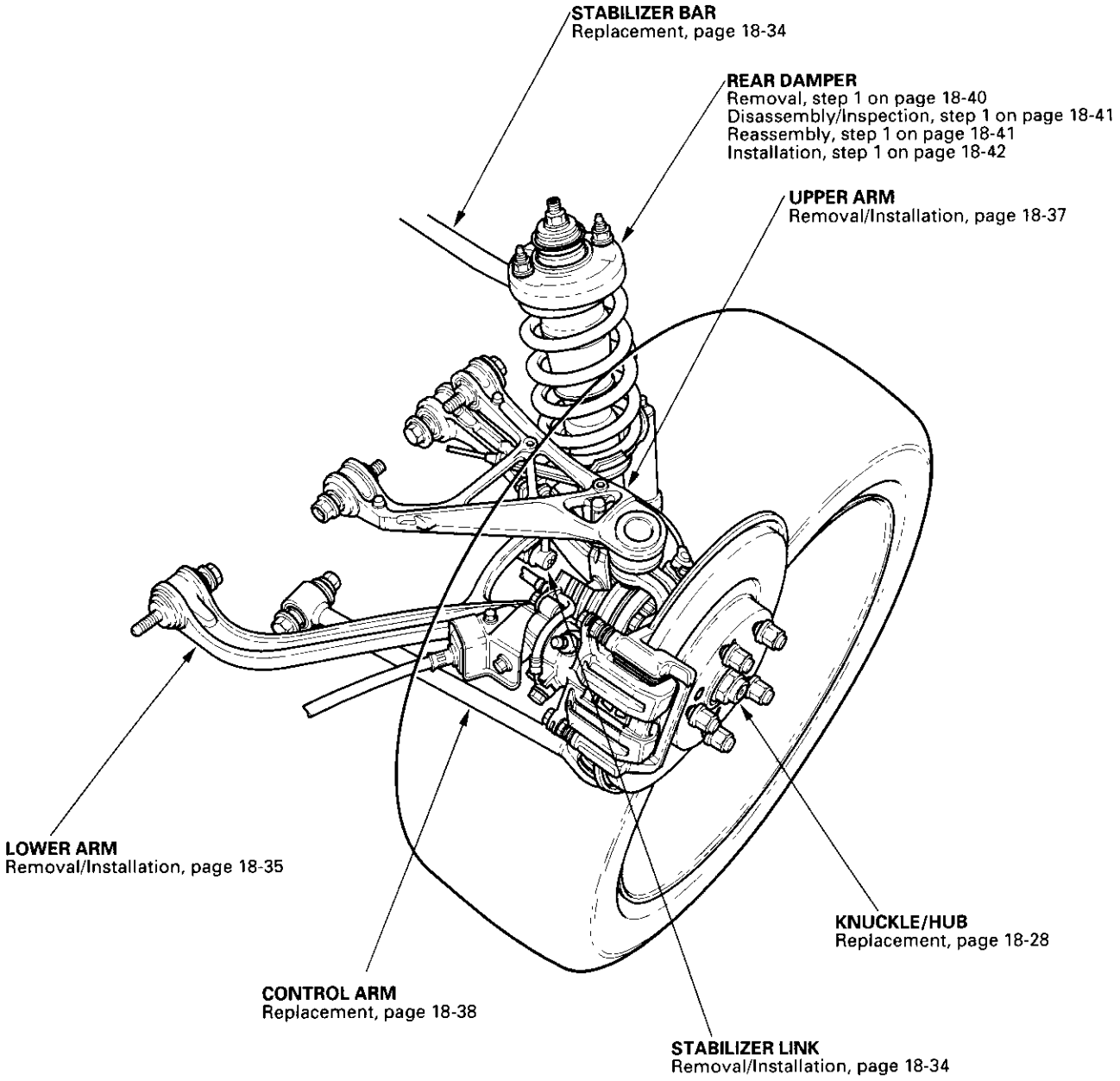

# Wheel Alignment

The suspension can be adjusted for caster, camber, and toe. However, each of these adjustments are interrelated to each other. For example, when you adjust toe, the camber changes. Therefore, you must adjust the front/rear alignment whenever you adjust caster, camber, or toe.

## Pre-Alignment Checks

For proper inspection and adjustment of the wheel alignment, do these checks:

1. Release the parking brake to avoid an incorrect measurement.
2. Make sure the suspension is not modified.
3. Check the tire size and tire pressure.

   **Tire size:**
   **Front: 205/55R16 89W**
   **Rear: 225/50R16 92W**

   **Tire pressure:**
   **Front/rear:**
   **220 kpa (2.2 kgf/cm², 32 psi)**

4. Check the runout of the wheels and tires.
5. Check the suspension ball joints. (Hold a wheel with your hands, and move it up and down and right and left to check for wobbling.)

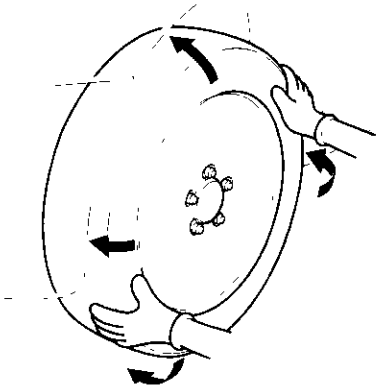

6. Bounce the suspension up and down several times.
7. Check the height of each suspension. Make sure the vehicle is empty, is parked on a level surface, and has properly inflated tires (the treadwear indicator must not be showing). If the height is out of specification, adjust the load as necessary.

**Height:**
**Front: 192 – 202 mm**

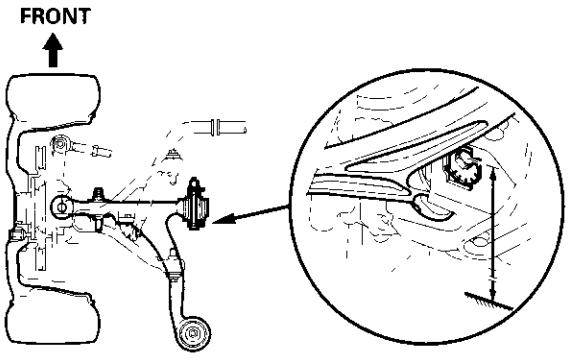


The height from the ground to the center of the head of the lower arm's front bushing bolt.

**Rear: 220 – 230 mm**

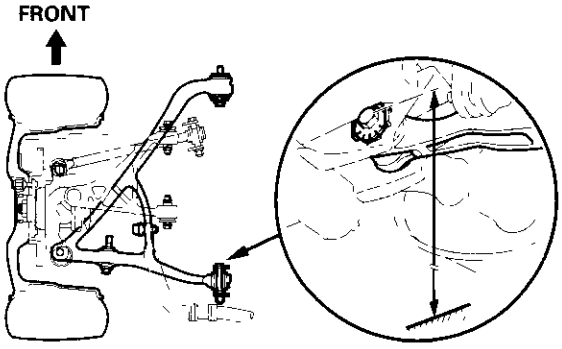


The height from the ground to the center of the head of the lower arm's rear bushing bolt.

(cont'd)

## Wheel Alignment (cont'd)

### Front Caster Inspection/Adjustment

Use commercially available computerized four wheel alignment equipment to measure wheel alignment (caster, camber, toe, and turning angle). Follow the equipment manufacturer's instructions.

1. Check the caster angle. If adjustment is required, go to step 2.

   **Front caster angle: 6°00′ ± 15′**

2. Hold the flange bolt (A) on the rear of the lower arm, and loosen the self-locking nut (B).

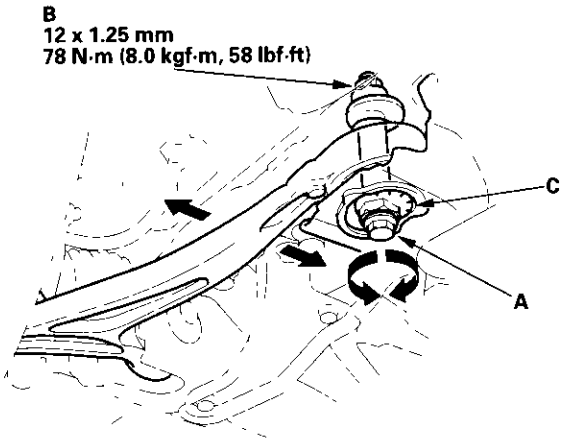


3. Turn the adjusting cam collar (C) until the caster is correct.

4. After adjusting, tighten the self-locking nut while holding the flange bolt.

### Front Camber Inspection/Adjustment

Use commercially available computerized four wheel alignment equipment to measure wheel alignment (caster, camber, toe, and turning angle). Follow the equipment manufacturer's instructions.

1. Check the camber angle. If adjustment is required, go to step 2.

   **Front camber angle: −0°30′ ± 10′**

2. Hold the adjusting bolt (A) on the front of the lower arm, and loosen the self-locking nut (B).

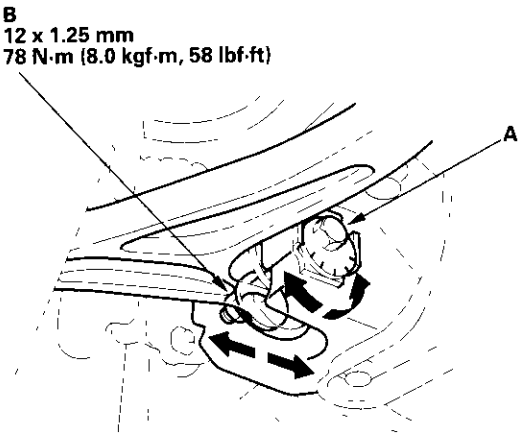


3. Turn the adjusting bolt until the camber is correct.

4. After adjusting, tighten the self-locking nut while holding the adjusting bolt.

## Rear Camber Inspection/Adjustment

Use commercially available computerized four wheel alignment equipment to measure wheel alignment (caster, camber, toe, and turning angle). Follow the equipment manufacturer's instructions.

1. Check the camber angle. If adjustment is required, go to step 2.

   **Rear camber angle: −1°30′ ± 10′**

2. Hold the adjusting bolt (A) on the control arm, and loosen the self-locking nut (B).

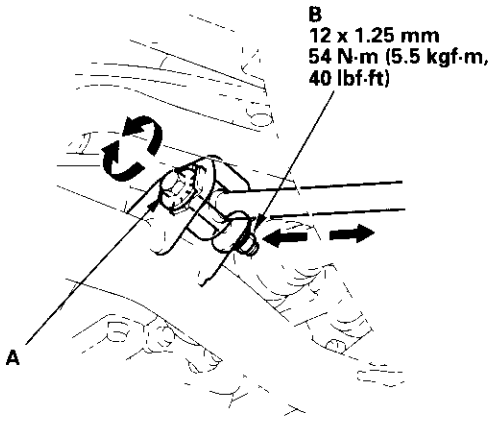


3. Turn the adjusting bolt until the camber is correct.

4. After adjusting, tighten the self-locking nut while holding the adjusting bolt.

## Front Toe Inspection/Adjustment

Use commercially available computerized four wheel alignment equipment to measure wheel alignment (caster, camber, toe, and turning angle). Follow the equipment manufacturer's instructions.

1. Center the steering wheel spokes.

2. Check the toe. If adjustment is required, go to step 3.

   **Front toe-in: 0 ± 2 mm (0 ± 0.08 in.)**

3. Hold the tie-rod end (A), and loosen the tie-rod locknut (B).

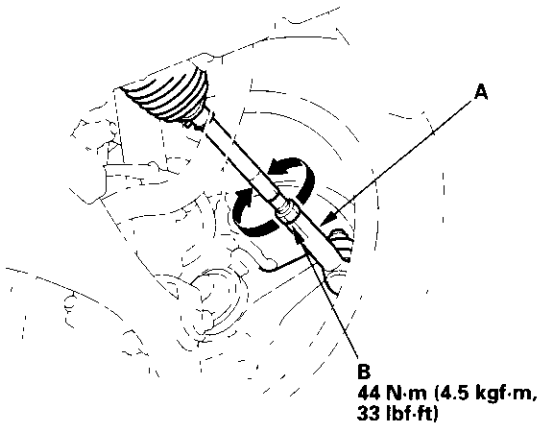


4. Turn the tie-rod until the toe is correct.

5. After adjusting, tighten the locknut while holding the tie-rod end. Reposition the rack-end boot if it is twisted or dislocated.

(cont'd)

## Wheel Alignment (cont'd)

### Rear Toe Inspection/Adjustment

Use commercially available computerized four wheel alignment equipment to measure wheel alignment (caster, camber, toe, and turning angle). Follow the equipment manufacturer's instructions.

1. Release the parking brake to prevent an incorrect measurement.
2. Check the toe. If adjustment is required, go to step 3.

   **Rear toe-in: 6.0 ± 2 mm (0.25 ± 0.08 in.)**

3. Hold the adjusting bolt of the control arm (A), and loosen the self-locking nut (B). Hold the adjusting bolt of the lower arm (C), and loosen the self-locking nut (D).

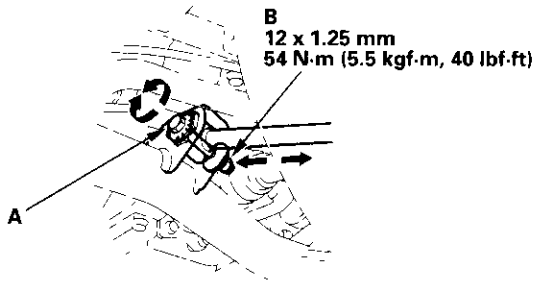


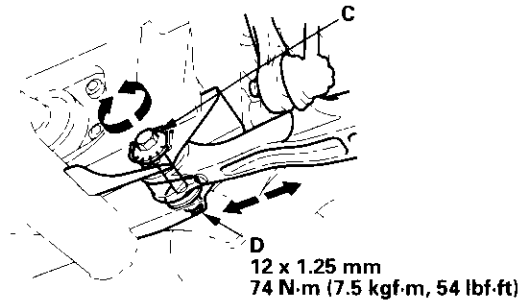


4. Turn both adjusting bolts in opposite directions until the toe is correct.

   NOTE: Adjust the rear toe by adjusting the control arm and the lower arm by the same amount in opposite directions to each other (for example, when you move the control arm out, move the lower arm in, and vise versa).

5. After adjusting, tighten both self-locking nuts while holding the respective adjusting bolts.

### Turning Angle Inspection

Use commercially available computerized four wheel alignment equipment to measure wheel alignment (caster, camber, toe, and turning angle). Follow the equipment manufacturer's instructions.

1. Turn the front wheel right and left while applying the brake, and check the turning angles of both wheels.

   **Turning angle:**
   **Inward wheel: 34°00′ ± 2°**
   **Outward wheel: 29°00′ (reference)**

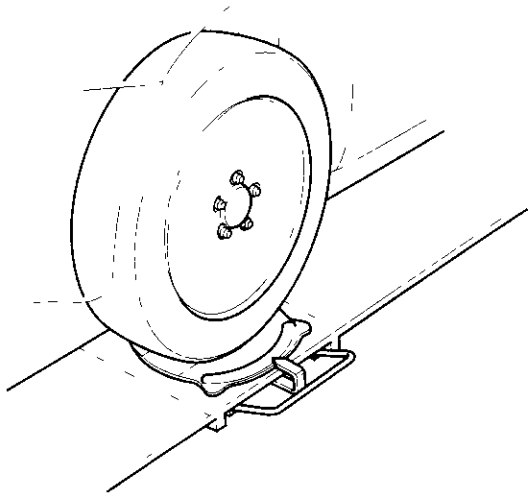

2. If the turning angles are out of specification or the inward turning angles differ between the right and left, check the toe, and adjust accordingly.
3. If the toe adjustment is correct but the turning angles are out of specification, check for bent or damaged suspension components.

## Wheel Bearing End Play Inspection

1. Raise the vehicle, and support it with safety stands in the proper locations (see page 1-13).
2. Remove the wheels, then reinstall the wheel nuts.
3. Attach the dial gauge. Place the dial gauge against the hub flange.

**Front:**

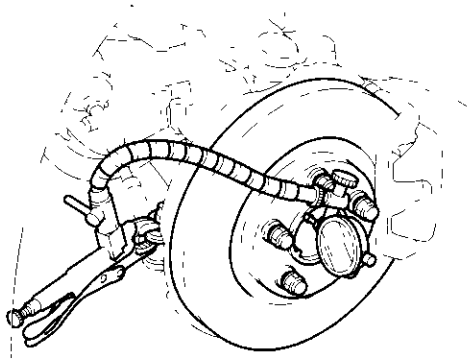

**Rear:**

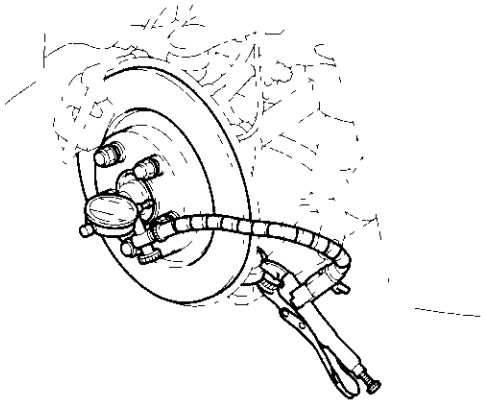

4. Measure the bearing end play moving the brake disc inward or outward.

**Standard:**
**Front/rear: 0 – 0.05 mm (0 – 0.002 in.)**

5. If the bearing end play measurement is more than the standard, replace the wheel bearing.

## Wheel Runout Inspection

1. Raise the vehicle, and support it with safety stands in the proper locations (see page 1-13).
2. Check for a bent or deformed wheel.
3. Set up the dial gauge as shown, and measure the axial runout by turning the wheel.

**Front and rear wheel axial runout:**
**Standard: 0 – 0.7 mm (0 – 0.03 in.)**
**Service limit: 2.0 mm (0.08 in.)**

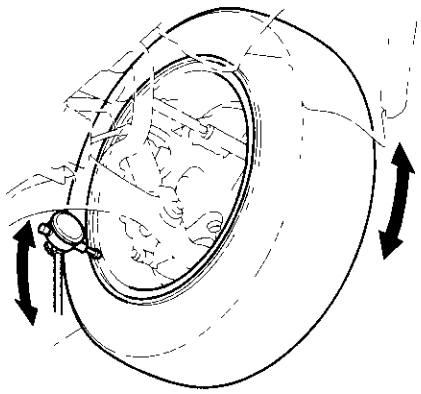

4. Readjust the dial gauge to the position shown, and measure the radial runout.

**Front and rear wheel radial runout:**
**Standard: 0 – 0.7 mm (0 – 0.03 in.)**
**Service limit: 1.5 mm (0.06 in.)**

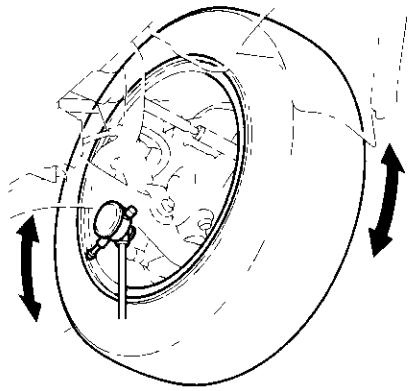

5. If the wheel runout is out of specification, check the wheel bearing end play.
6. If the bearing end play is within the specification but the wheel runout is more than the service limit, replace the wheel.

## Ball Joint Removal

**Special Tools Required**
Ball joint remover, 28 mm 07MAC-SL00200

1. Install a hex nut onto the threads of the ball joint. Make sure the nut is flush with the ball joint pin end to prevent damage to the threaded end of the ball joint pin.

2. Apply grease to the special tool on the areas shown (A). This will ease installation of the tool and prevent damage to the pressure bolt (B) threads.

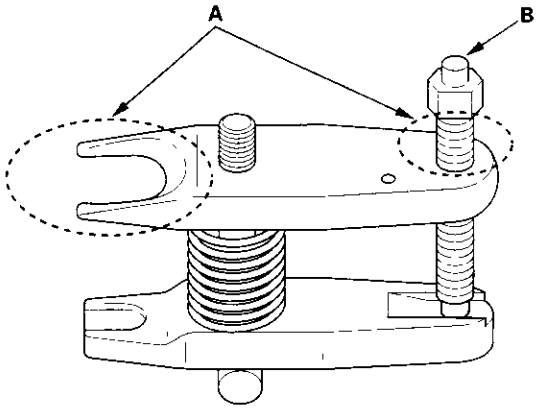


3. Install the special tool as shown. Insert the jaws carefully, making sure not to damage the ball joint boot. Adjust the jaw spacing by turning the pressure bolt.

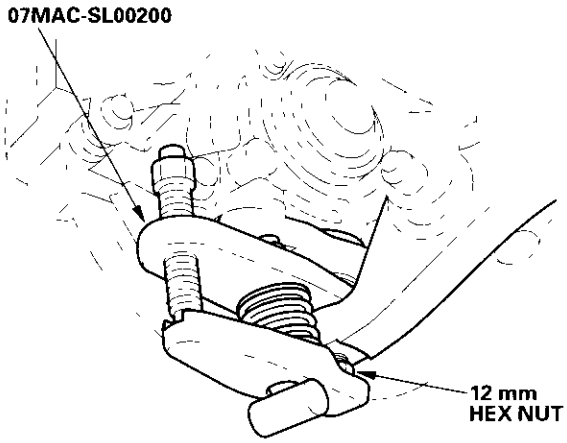


4. Once the special tool is in place, turn the adjusting bolt (A) as necessary to make the jaws parallel. Then hand-tighten the pressure bolt (B), and recheck the jaws to make sure they are still parallel.

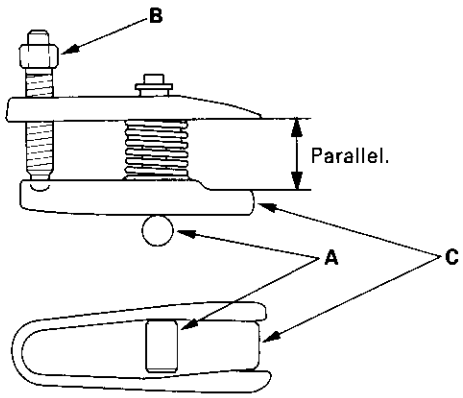


5. After making the adjustment to the adjusting bolt, make sure the head of the adjusting bolt (A) is in the position shown to allow the jaw (C) to pivot.

6. With a wrench, tighten the pressure bolt (B) until the ball joint pin pops loose from the steering or suspension arm. If necessary, apply penetrating type lubricant to loosen the ball joint pin.

7. Remove the tool, then remove the nut from the end of the ball joint pin, and pull the ball joint out of the steering or suspension arm. Inspect the ball joint boot, and replace it if damaged.

## Knuckle/Hub Replacement

### Exploded View

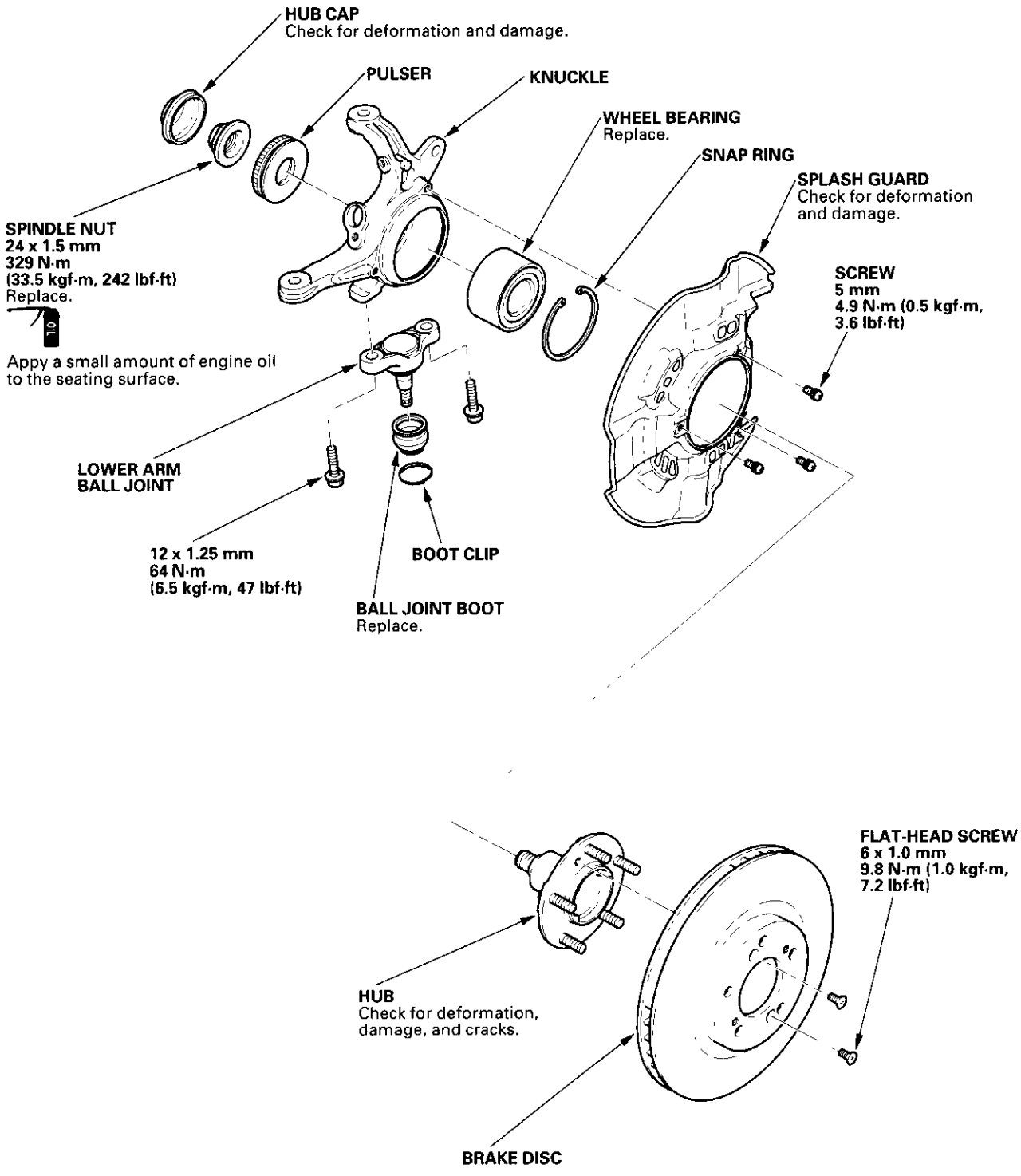


(cont'd)

## Knuckle/Hub Replacement (cont'd)

**Special Tools Required**
- Ball joint remover, 28 mm 07MAC-SL00200
- Bearing driver attachment, 72 x 75 mm 07746-0010600
- Driver, 07749-0010000
- Support base, 72 x 78/82.6 mm 07965-SD90100
- Hub dis/assembly tool, 07GAF-SD40200

1. Raise the front of the vehicle, and support it with safety stands in the proper locations (see page 1-13).

2. Remove the wheel nuts (A) and the front wheel.

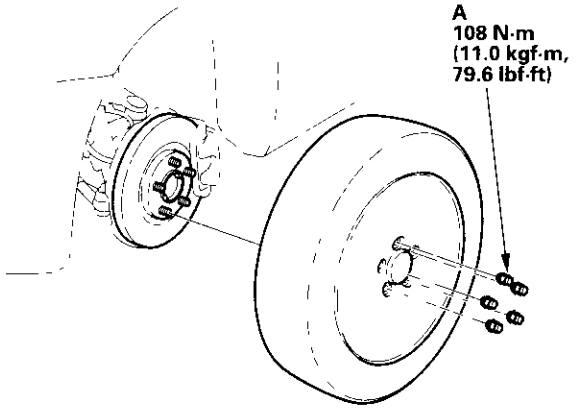


3. Remove the brake hose bracket mounting bolt (A).

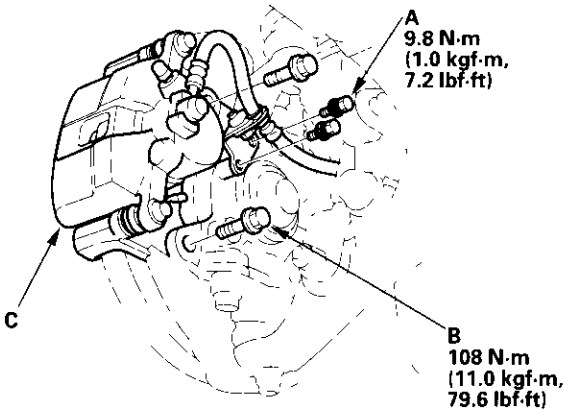


4. Remove the caliper bracket mounting bolts (B), and remove the caliper assembly (C) from the knuckle. To prevent damage to the caliper assembly or brake hose, use a short piece of wire to hang the caliper assembly from the undercarriage. Do not twist the brake hose with force.

5. Remove the flange bolts (A) and wheel sensor (B) from the knuckle (C). Do not disconnect the wheel sensor connector.

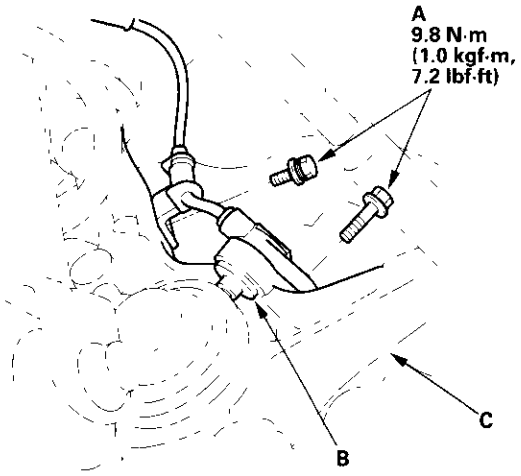


6. Remove the 6 mm brake disc retaining screws (A).

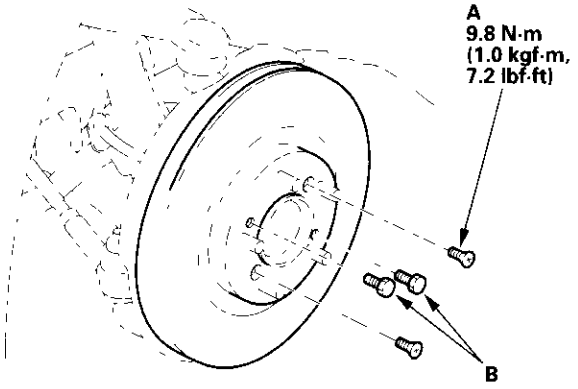


7. Screw two 8 x 1.25 mm bolts (B) into the disc to push it away from the hub. Turn each bolt two turns at a time to prevent cocking the disc excessively.

8. Remove the brake disc from the knuckle.

9. Check the hub for damage and cracks.

10. Remove the cotter pin (A) from the tie-rod end ball joint, then remove the nut (B).

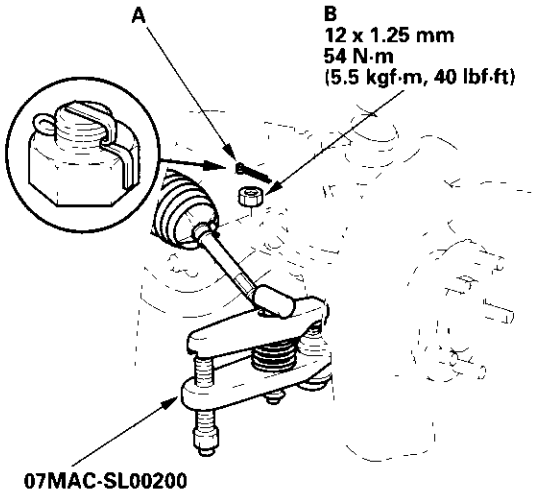


11. Remove the tie-rod ball joint from the knuckle using the special tool (see page 18-10).

12. Remove the cotter pin (A) from the lower arm ball joint, and remove the castle nut (B).

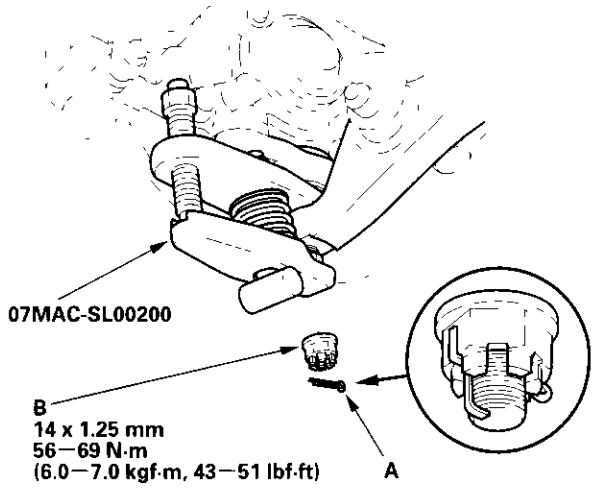


13. Remove the lower arm ball joint from the knuckle using the special tool (see page 18-10).

14. Remove the lock pin (A) from the upper arm ball joint, and remove the castle nut (B).

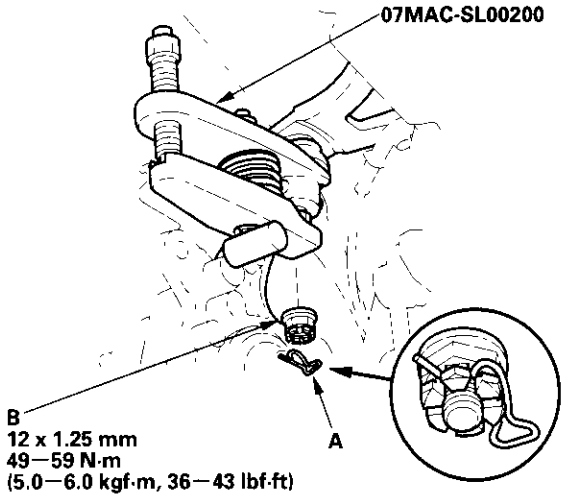


15. Remove the upper arm ball joint from the knuckle using the special tool (see page 18-10).

16. Remove the knuckle.

17. Remove the hub cap (A).

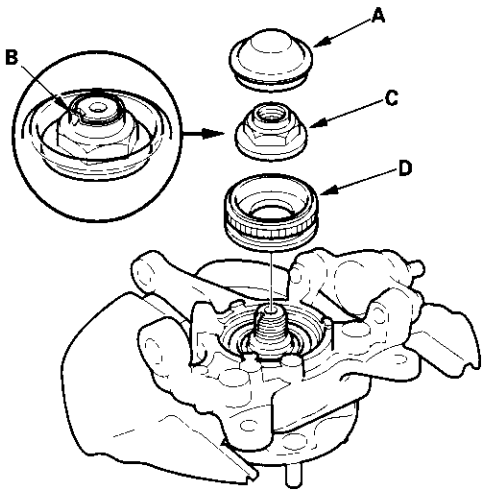


18. Raise the stake (B) of the spindle nut (C), and remove the nut and pulser (D).

(cont'd)

## Knuckle/Hub Replacement (cont'd)

19. Separate the hub (A) from the knuckle (B) using a hydraulic press. Be careful not to deform the splash guard. Hold the hub to keep it from falling when pressed clear.

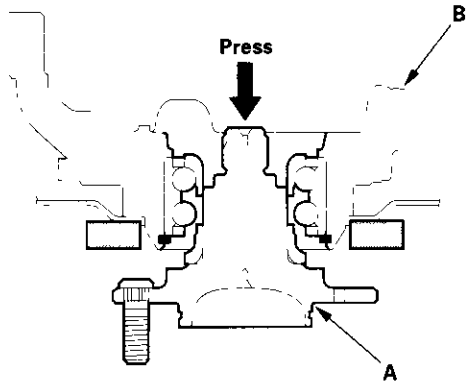


20. Remove the screws (A), snap ring (B), and the splash guard (C) from the knuckle (D).

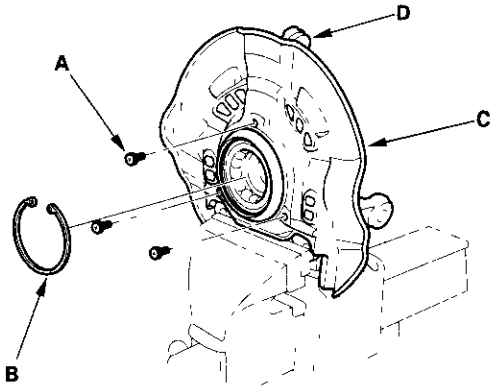


21. Press the wheel bearing (A) out of the knuckle (B) using the special tools and a press.

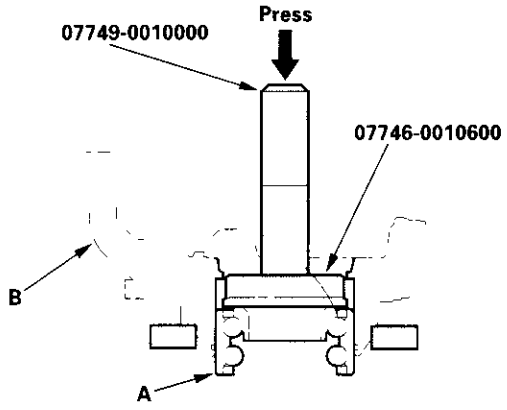


22. Press the wheel bearing inner race (A) out of the hub (B) using a commercially available bearing separator (C) and a press.

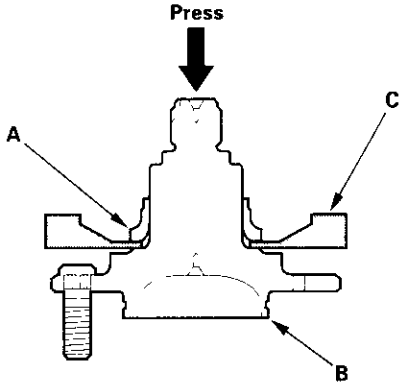

23. Wash the knuckle and hub thoroughly in high flash point solvent before reassembly.

24. Press a new wheel bearing (A) into the knuckle (B) using the old bearing (C), a steel plate (D), the special tool, and a press. Place the wheel bearing on the knuckle with the pack seal side (metal color) facing inside. Be careful not to damage the sleeve of the pack seal.

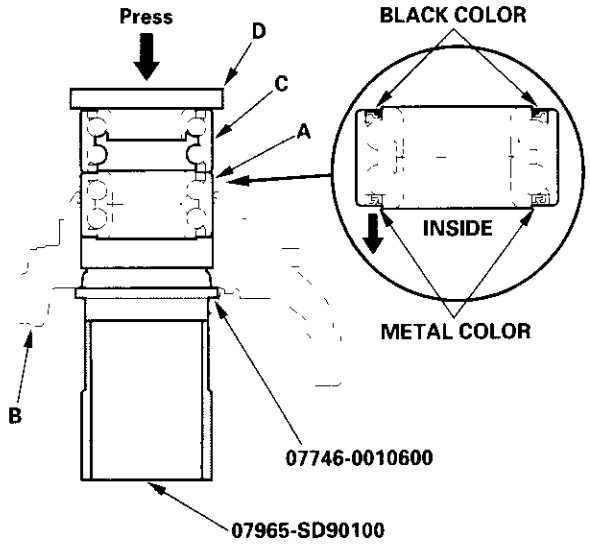


25. Install the snap ring (A) securely in the knuckle (B).

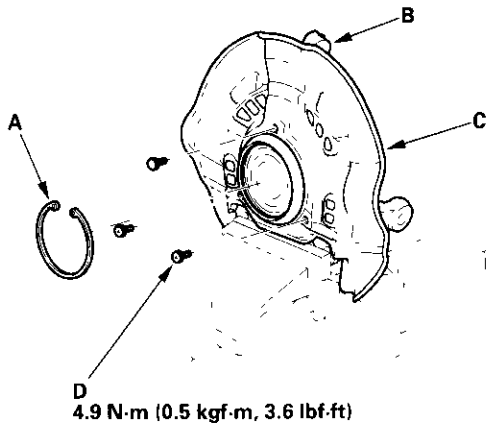


26. Install the splash guard (C), and tighten the screws (D).

27. Wash the spindle thoroughly in high flash point solvent before reassembly.

28. Install the hub (A) onto the knuckle (B) using the special tools and a hydraulic press. Take care not to deform the splash guard.

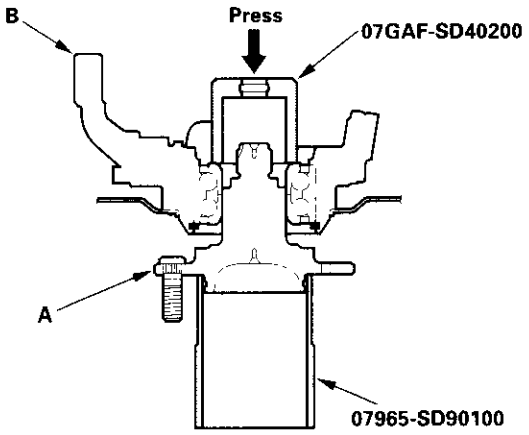


29. Install the pulser (A).

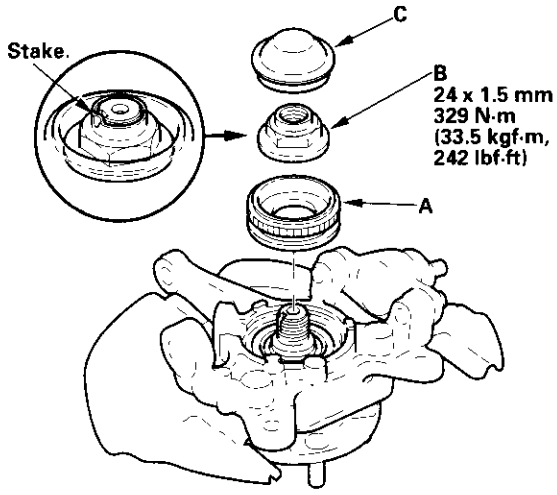


30. Apply a small amount of engine oil to the seating surface of a new spindle nut (B). Install the nut, and tighten it to the specified torque. Stake the nut shoulder against the driveshaft with a drift.

31. Install the hub cap (C).

(cont'd)

## Knuckle/Hub Replacement (cont'd)

32. Install the knuckle in the reverse order of removal, paying particular attention to the following items:

    - Be careful not to damage the ball joint boot when installing the knuckle.
    - Use a new spindle nut and new self-locking nuts on reassembly.
    - Tighten all mounting hardware to the specified torque values.
    - Tighten the castle nut to the lower torque specification, then tighten only far enough to align the slot with the ball joint pin hole. Do not align by loosening the castle nut.
    - Install a new cotter pin or lock pin on the castle nuts after torquing.
    - Before installing the brake disc, clean the mating surface of the hub and the inside of the brake disc.
    - Before installing the wheel, clean the mating surface of the brake disc and the inside of the wheel.
    - Check the wheel alignment, and adjust it if necessary (see page 18-5).

## Ball Joint Boot Replacement

**Special Tools Required**
Ball joint boot clip guide, 07GAG-SD40700

1. Remove the boot clip and the boot.

2. Pack the interior and lip of the new boot (A) with fresh grease. Do not contaminate the lower collar of the boot (B) with grease.

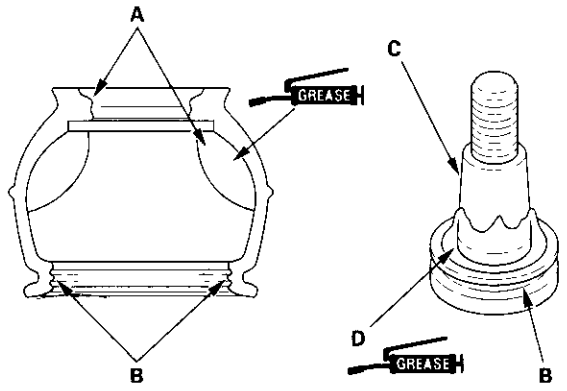


3. Wipe the grease off the tapered section of the pin (C), and pack the base (D) with fresh grease.

4. Install the boot onto the ball joint pin, then squeeze it gently to force out any air. Do not let dirt or other foreign materials get into the boot.

5. Adjust the special tool with the adjusting bolt (A) until its base is just above the groove around the bottom of the boot. Then slide the clip over the tool into the position (B) on the boot.

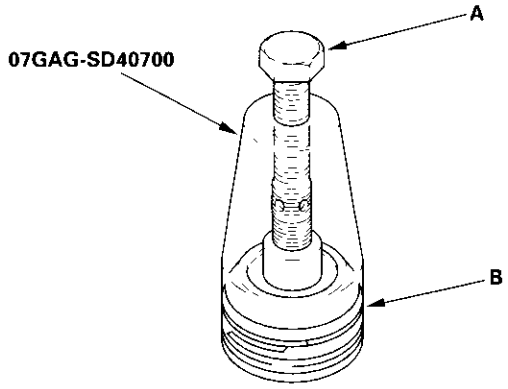


6. After installing a boot, wipe any grease off the exposed portion of the ball joint pin.

## Stabilizer Bar Replacement

1. Raise the front of the vehicle, and support it with safety stands in the proper locations (see page 1-13). Remove the front wheel.

2. Remove the clips (A) and flange bolts (B), then remove the splash guard (C).

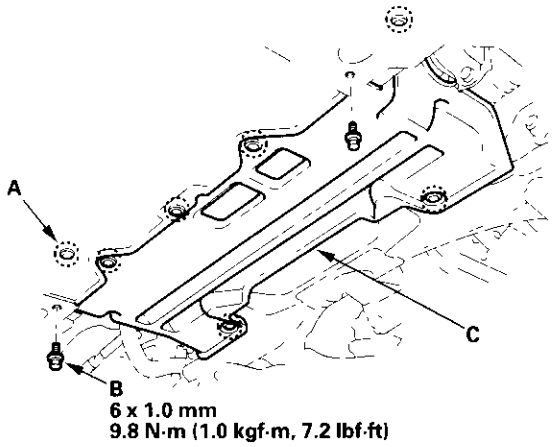


3. Remove the self-locking nuts (A) while holding the joint pins (B) with a hex wrench (C), and disconnect the stabilizer links (D) from the stabilizer bar (E) on the right and left.

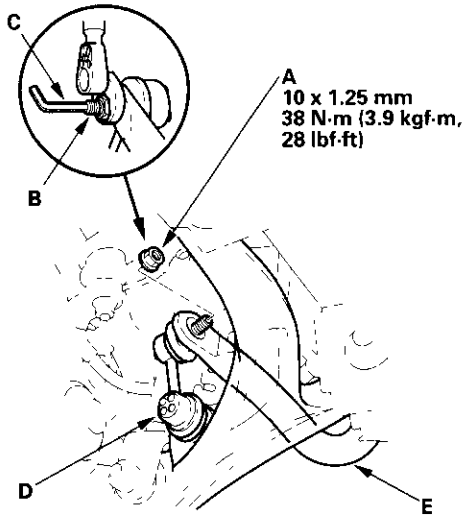


4. Remove the bolts (A) and bushing holders (B), then remove the bushings (C) and the stabilizer bar (D).

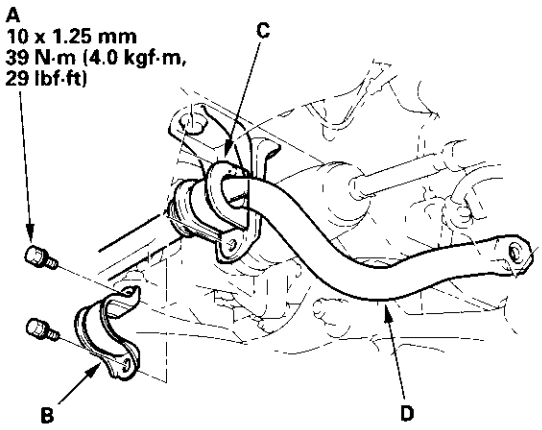


5. Install the stabilizer bar in the reverse order of removal.

   NOTE: Refer to Stabilizer Link Replacement to connect the stabilizer bar to the links.

## Stabilizer Link Removal/Installation

1. Raise the front of the vehicle, and support it with safety stands in the proper locations (see page 1-13). Remove the front wheel.
2. Remove splash guard (see page 18-17).
3. Remove the self-locking nut (A) and flange nut (B) while holding the respective joint pins (C) with a hex wrench (D), and disconnect the stabilizer link (E) from the stabilizer bar (F) and the lower arm (G).

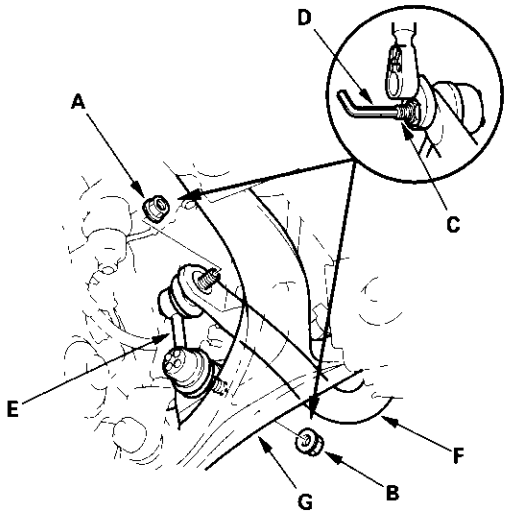


4. Install the stabilizer link to the stabilizer bar and lower arm with the joint pins set at the center of their range of movement.

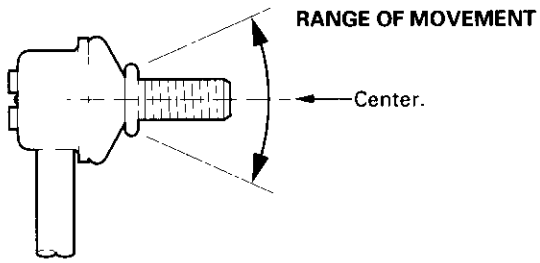


5. Install the self-locking nut and flange nut, and lightly tighten.
6. Place a jack under the lower arm, and raise the suspension to load the stabilizer.
7. Tighten the self-locking nut (A) and flange nut (B) to the specified torque values while holding the respective joint pins (C) with a hex wrench (D).

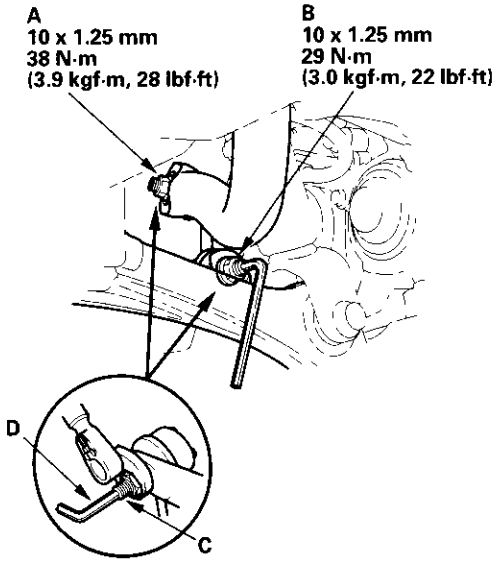


8. After 5 minutes of driving, re-tighten the self-locking nut of the joint connected to the stabilizer bar again to the specified torque value.

# Lower Arm Removal/Installation

**Special Tools Required**
- Ball joint remover, 28 mm 07MAC-SL00200

1. Raise the front of the vehicle, and support it with safety stands in the proper locaions (see page 1-13). Remove the front wheel.

2. Remove the flange nut (A) while holding the joint pin (B) with a hex wrench (C), and disconnect the stabilizer link (D) from the lower arm (E).

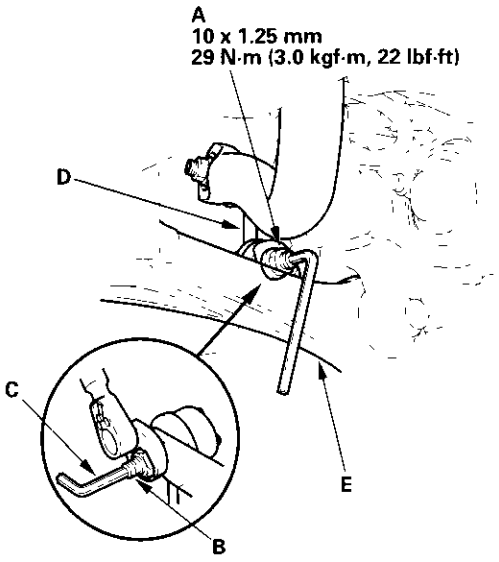


3. Remove the flange bolt (A), and disconnect the damper (B) from the lower arm (C).

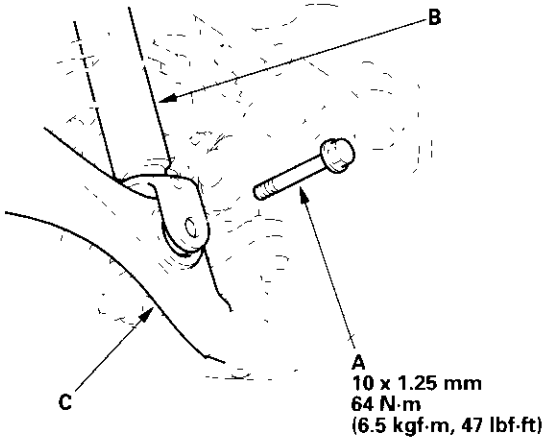


4. Remove the cotter pin (A) from the lower arm ball joint, and remove the castle nut (B).

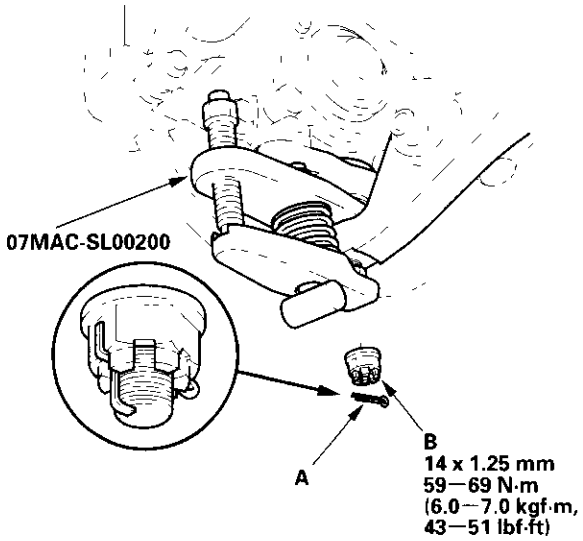


5. Remove the lower arm ball joint from the knuckle using the special tool (see page 18-10).

6. Remove the self-locking nut (A) and self-locking cam nut (B), then remove the cam plate (C), adjusting bolt (D), cam collar (E), flange bolt (F), and the lower arm.

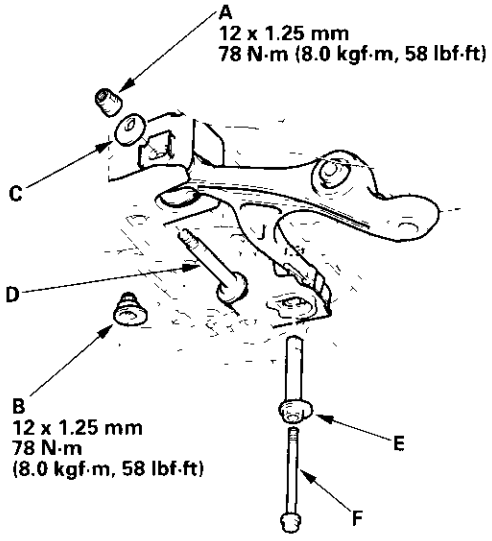


(cont'd)

## Lower Arm Removal/Installation (cont'd)

7. Install the lower arm in the reverse order of removal paying particular attention to the following items:

   - Be careful not to damage the ball joint boot when connecting the lower arm to the knuckle.
   - Use a new self-locking cam nut and a new self-locking nut on reassembly.
   - Tighten all mounting hardware to the specified torque values.
   - First install all the components and lightly tighten bolts and nuts, then place a jack under the lower arm, and raise the suspension to load the weight before fully tightening to the specified torque values.
   - Tighten the castle nut to the lower torque specification, then tighten only far enough to align the slot with the ball joint pin hole. Do not align by loosening the castle nut.
   - Install a new cotter pin on the castle nut after torquing.
   - Before installing the wheel, clean the mating surface of the brake disc and the inside of the wheel.
   - Check the wheel alignment, and adjust it if necessary (see page 18-5).

## Upper Arm Replacement

**Special Tools Required**
- Ball joint remover, 28 mm 07MAC-SL00200

1. Raise the front of the vehicle, and support it with safety stands in the proper locations (see page 1-13). Remove the front wheel.

2. Remove the flange bolts (A) and the wheel sensor harness (B) from the upper arm (C).

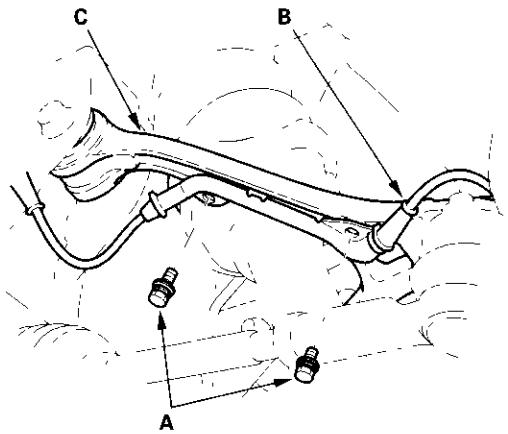


3. Remove the lock pin (A) from the upper arm ball joint, and remove the castle nut (B).

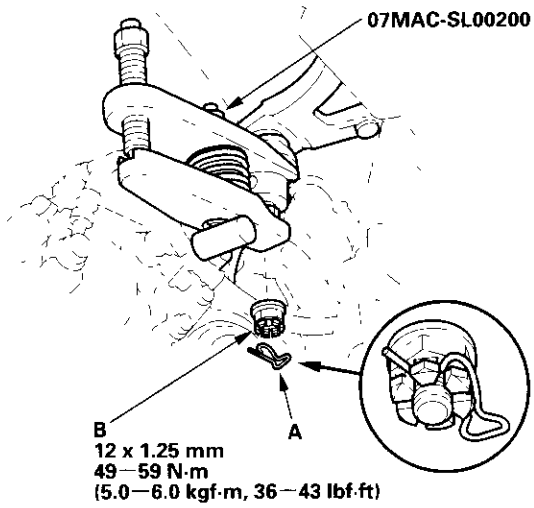


4. Remove the upper arm ball joint from the knuckle using the special tool (see page 18-10).

5. Remove the flange bolts (A), and the upper arm.

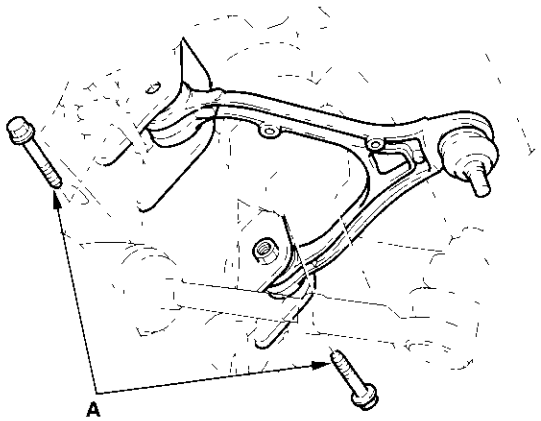

**A**
**12 x 1.25 mm**
**103 N·m (10.5 kgf·m, 75.9 lbf·ft)**

6. Install the upper arm in the reverse order of removal paying particular attention to the following items:

   - Be careful not to damage the ball joint boot when connecting the upper arm to the knuckle.
   - Tighten all mounting hardware to the specified torque values.
   - First install all the suspension components and lightly tighten bolts and a nut, then place a jack under the lower arm, and raise the suspension to load the weight before fully tightening to the specified torque values.
   - Tighten the castle nut to the lower torque specification, then tighten only far enough to align the slot with the ball joint pin hole. Do not align by loosening the castle nut.
   - Install a new lock pin on the castle nut after torquing.
   - Before installing the wheel, clean the mating surface of the brake disc and the inside of the wheel.
   - Check the wheel alignment, and adjust it if necessary (see page 18-5).

## Damper/Spring Replacement

### Exploded View

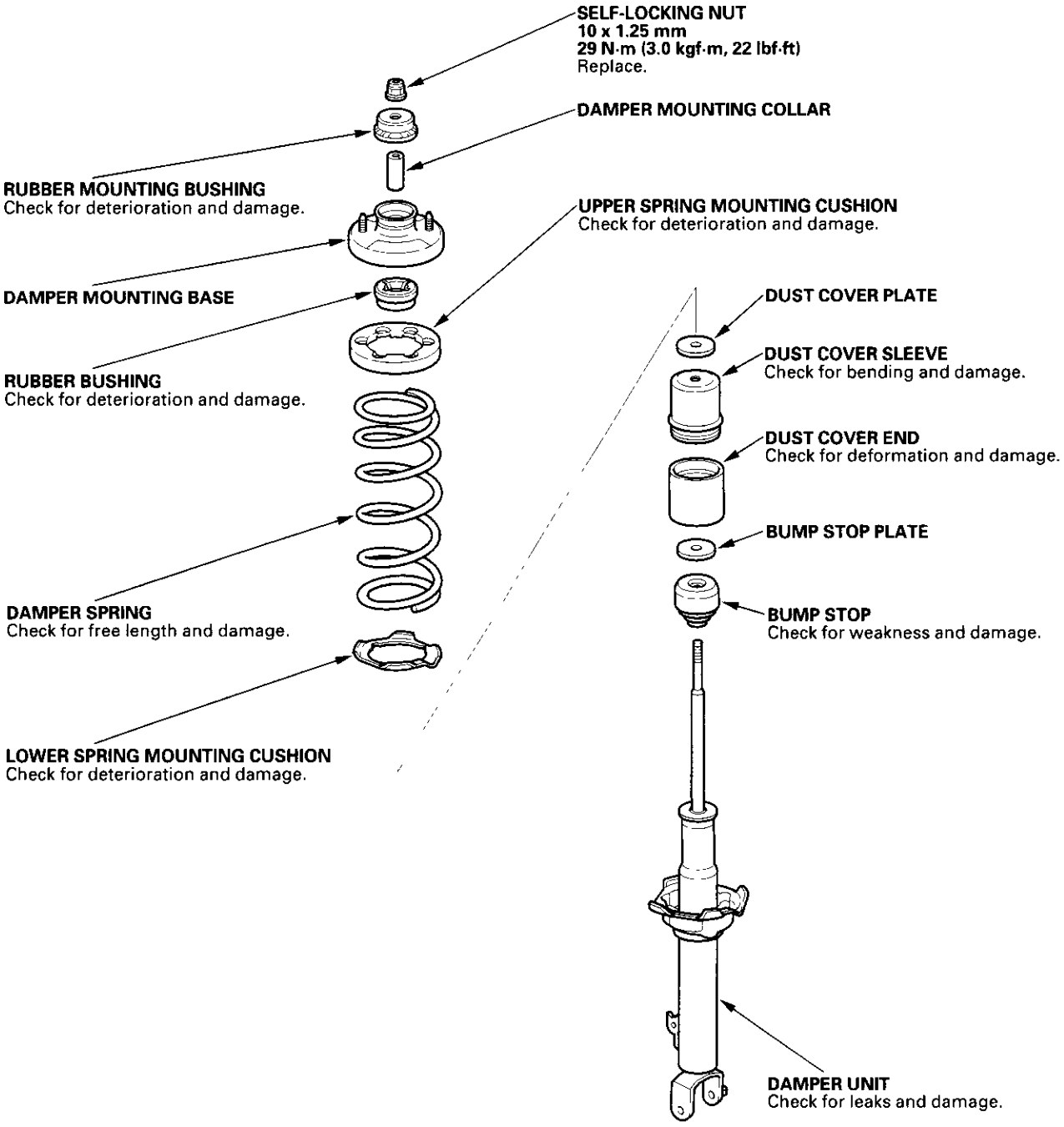

**Special Tools Required**
Strut spring compressor, Branick MST-580A or Model 7200, or equivalent, commercially available.

## Removal

1. Raise the front of the vehicle, and support it with safety stands in the proper locations (see page 1-13). Remove the front wheel.

2. Remove the flange bolt (A) and brake hose mounting bracket (B) from the damper.

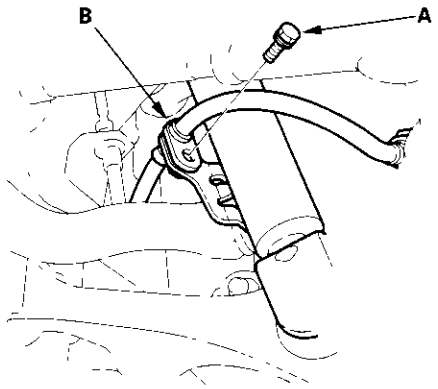


3. Remove the cotter pin (A) from the lower arm ball joint, and remove the castle nut (B).

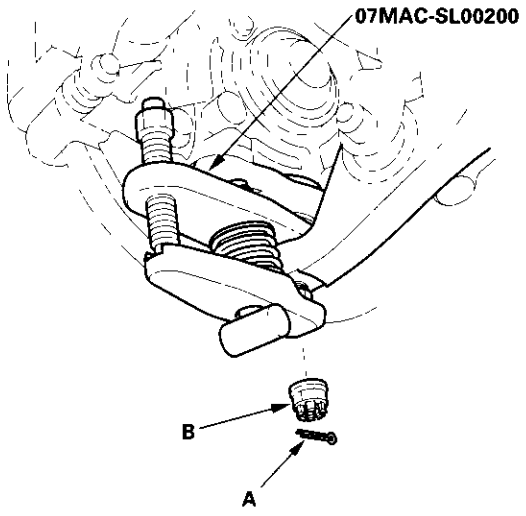


4. Remove the lower arm ball joint from the knuckle using the special tool (see page 18-10).

5. Remove the flange nuts (A) from the top of the damper.

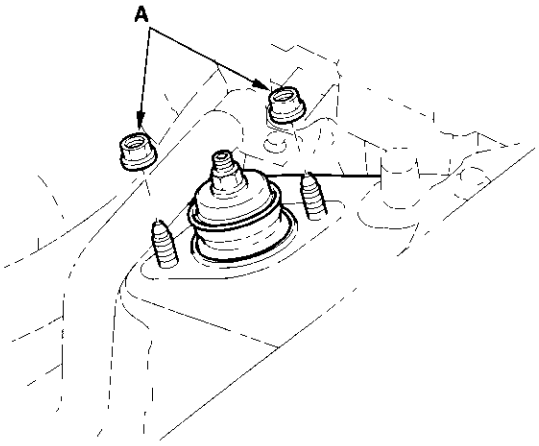


6. Remove the flange bolt (A) at the bottom of the damper.

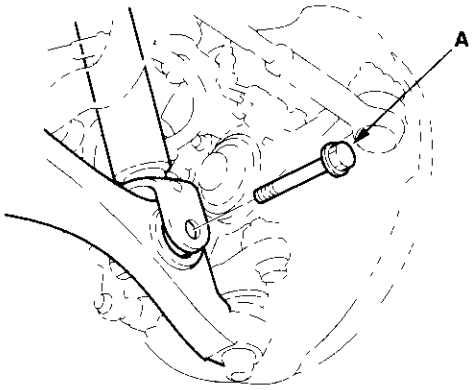


(cont'd)

## Damper/Spring Replacement (cont'd)

7. Lower the lower arm, and remove the damper assembly (A).

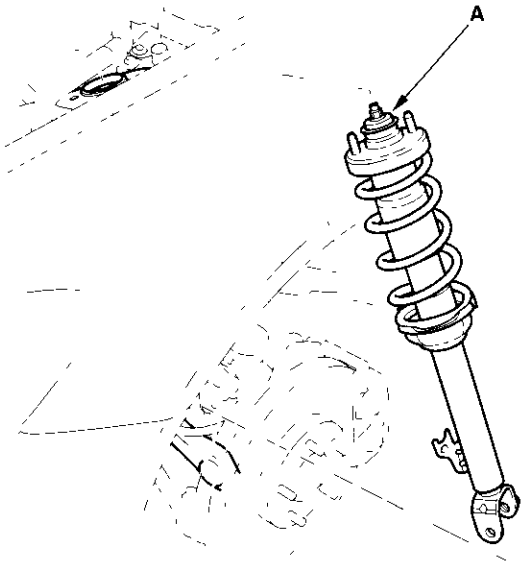


### Disassembly/Inspection

1. Compress the damper spring with the commercially available strut spring compressor (A) according to the manufacturer's instructions, then remove the self-locking nut (B). Do not compress the spring more than necessary to remove the nut.

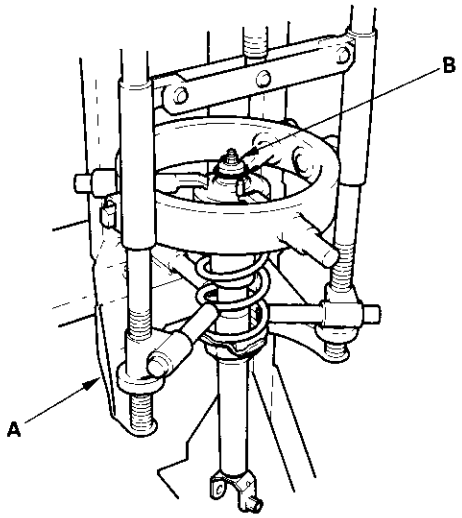


2. Release the pressure from the strut spring compressor, then disassemble the damper as shown in the Exploded View.
3. Reassemble all of the parts, except the spring.
4. Compress the damper assembly by hand, and check for smooth operation through a full stroke, both compression and extension. The damper should extend smoothly and constantly when compression is released. If it does not, the gas is leaking and the damper should be replaced.
5. Check for oil leaks, abnormal noises, or binding during these tests.

## Reassembly

1. Assemble all of the damper components except the self-locking nut onto the damper unit. Align the spring bottom end (A), the stepped part of the lower spring mounting cushion, and the step on the lower spring seat (B).

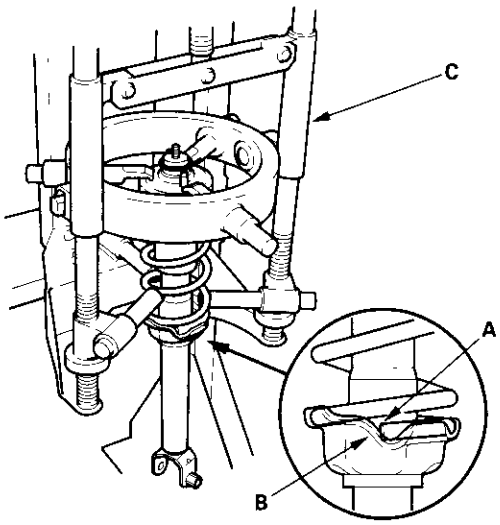


2. Install the damper assembly on a commercially available strut spring compressor (C).

3. Position the damper mounting base as shown.

**VIEWING FROM TOP**

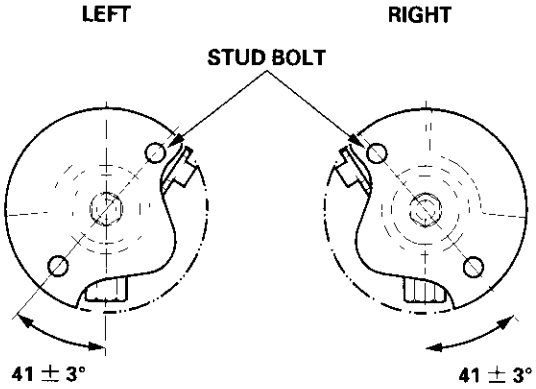


4. Compress the damper spring with the spring compressor.

5. Install a new self-locking nut (A) on the damper shaft.

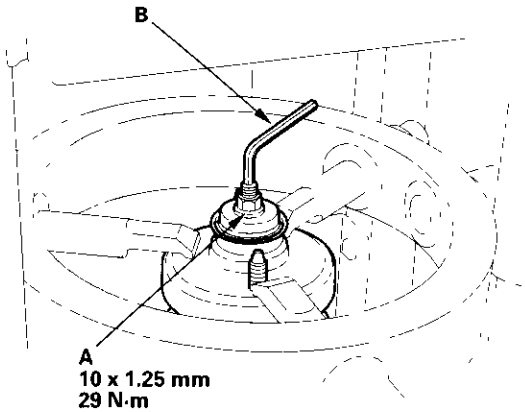


6. Hold the damper shaft with a hex wrench (B), and tighten the self-locking nut to the specified torque.

(cont'd)

## Damper/Spring Replacement (cont'd)

### Installation

1. Lower the lower arm, and position the damper assembly (A) in the body.

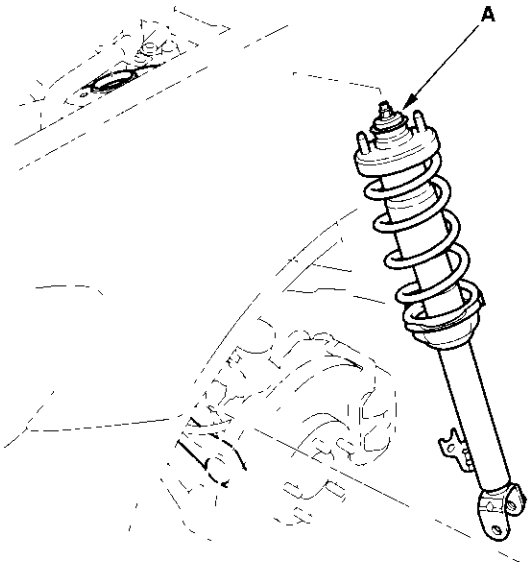


2. Loosely install the flange nuts (A) onto the damper studs.

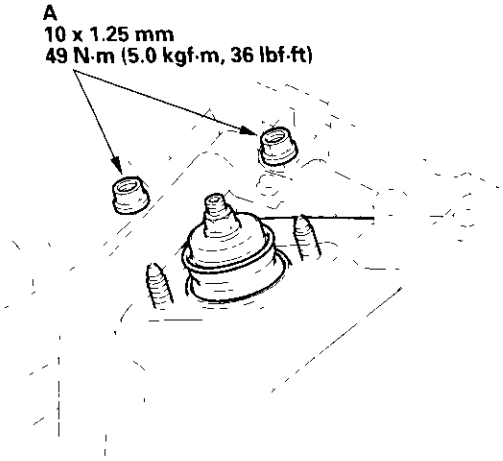


3. Position the damper bottom on the lower arm (A), and connect the lower arm and the lower ball joint (B).

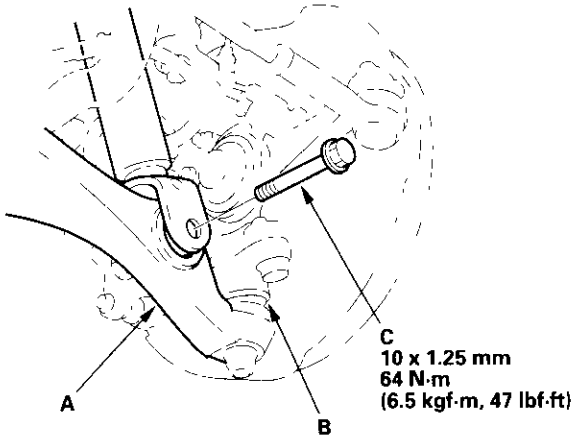


4. Install the flange bolt (C), and lightly tighten.
5. Raise the suspension until the vehicle just lifts off the safety stand.
6. Install the castle nut (A) onto the lower ball joint pin, and tighten it to the specified torque.

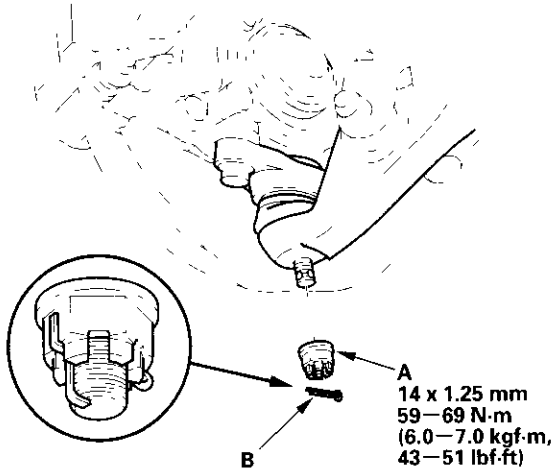


7. Install the cotter pin (B).
8. Tighten the flange bolt connecting the damper bottom to the lower arm to the specified torque.

9. Tighten the flange nuts on the top of the damper to the specified torque.

10. Install the brake hose mounting bracket (A) and the flange bolt (B) to the damper, and tighten the bolt to the specified torque.

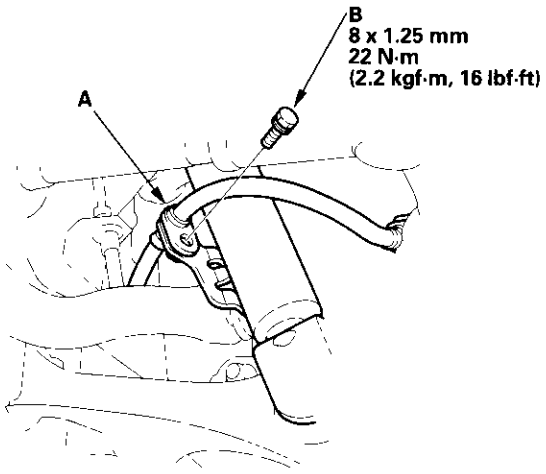

## Knuckle/Hub Replacement

### Exploded View

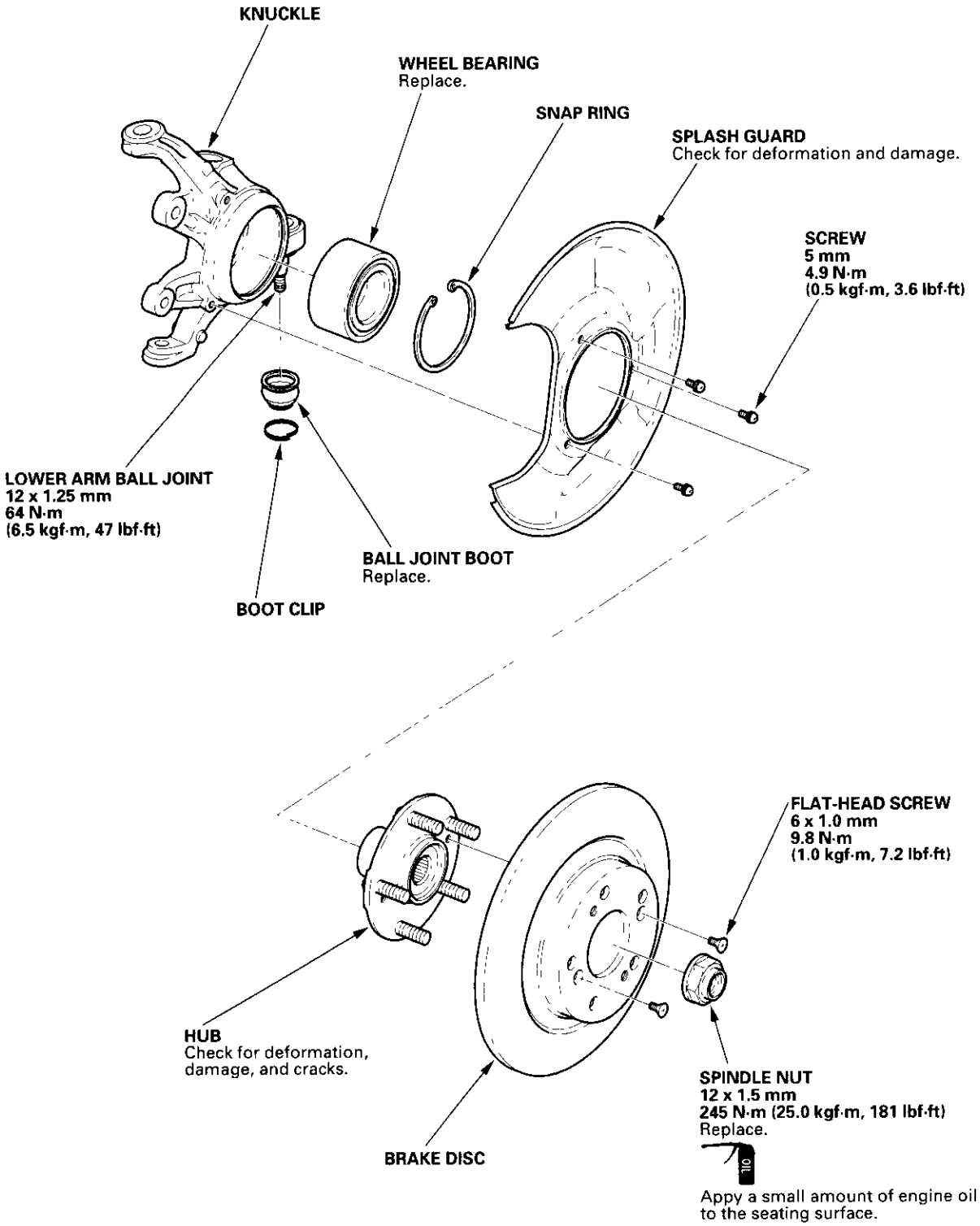

**Special Tools Required**

- Hub dis/assembly tool attachment, 42 mm 07GAF-SD40100
- Ball joint remover, 28 mm 07MAC-SL00200
- Bearing driver attachment, 62 x 68 mm 07746-0010500
- Driver, 07749-0010000
- Support base, 72 x 78/82.6 mm 07965-SD90100
- Attachment, 52 x 55 mm 07746-0010400

1. Raise the rear of the vehicle, and support it with safety stands in the proper locations (see page 1-13).

2. Remove the wheel nuts (A) and rear wheel.

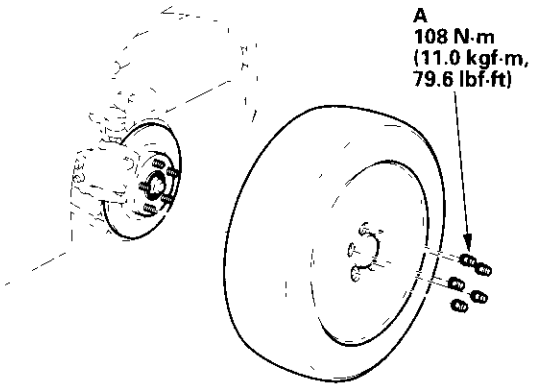


3. Remove the caliper bracket mounting bolts (A), and remove the caliper assembly (B) from the knuckle. To prevent damage to the caliper assembly or brake hose, use a short piece of wire to hang the caliper assembly from the undercarriage. Do not twist the brake hose with force.

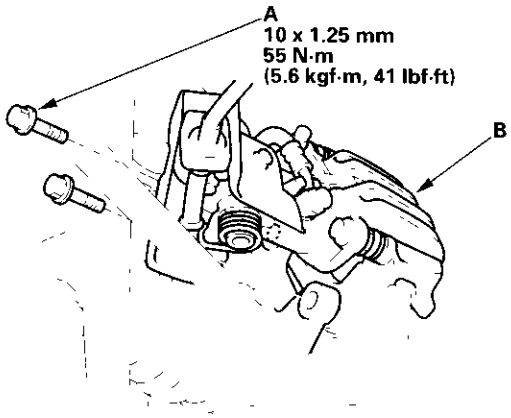


4. Remove the flange bolt (A) and wheel sensor (B) from the knuckle. Do not disconnect the wheel sensor connector.

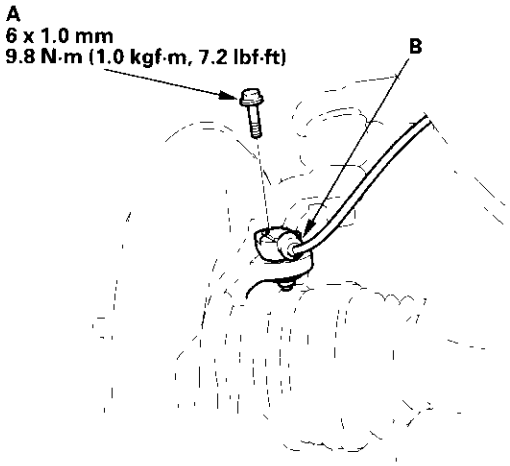


5. Raise the stake (A) of the spindle nut (B), and remove the nut.

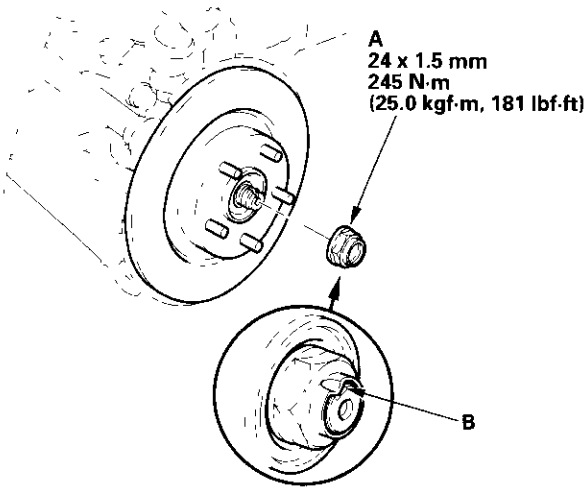


(cont'd)

## Knuckle/Hub Replacement (cont'd)

6. Remove the 6 mm brake disc retaining flat-head screws (A).

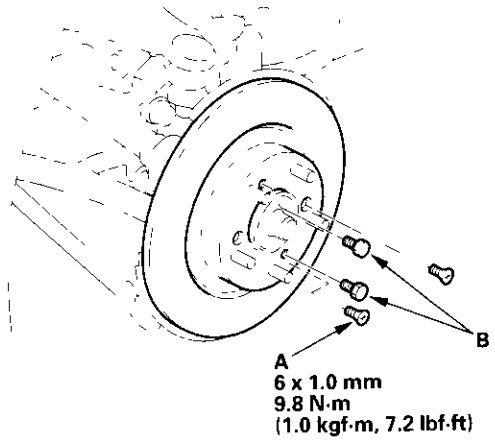


7. Screw two 8 x 1.25 mm bolts (B) into the disc to push it away from the hub. Turn each bolt two turns at a time to prevent cocking the disc excessively.

8. Remove the brake disc from the knuckle.

9. Check the hub for damage and cracks.

10. Remove the self-locking nut (A), cam plate (B), and adjusting bolt (C), then disconnect the control arm (D) from the frame.

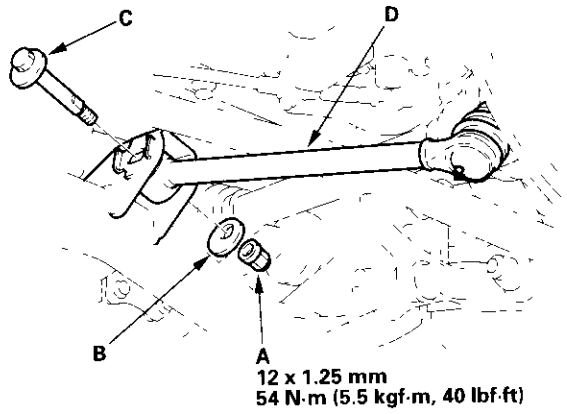


11. Remove the lock pin (A) from the control arm ball joint, and remove the castle nut (B).

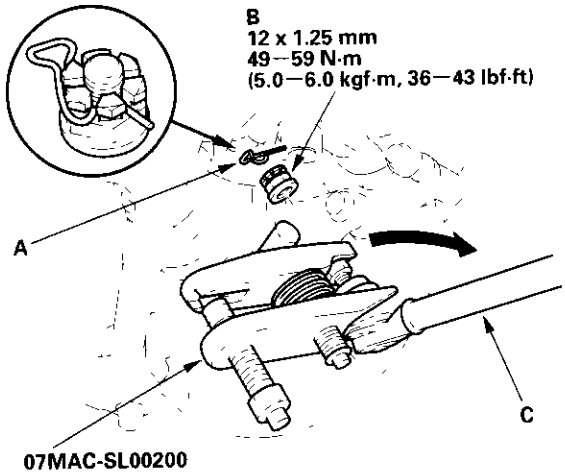


12. Remove the control arm ball joint from the knuckle using the special tool (see page 18-10).

    NOTE: Turn the control arm (C) outward to install the ball joint remover.

13. Remove the control arm.

14. Remove the cotter pin (A) from the lower arm ball joint, and remove the castle nut (B).

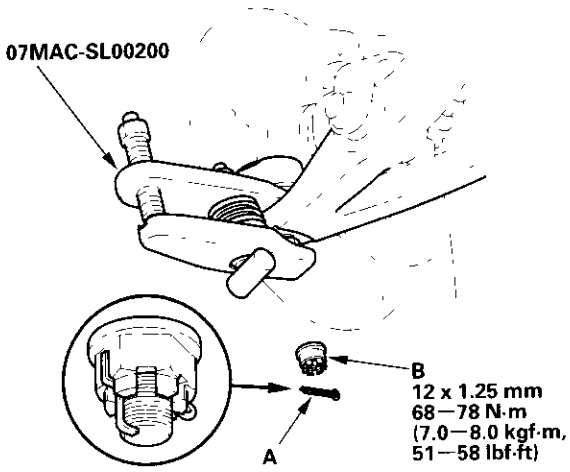


15. Remove the lower arm ball joint from the knuckle using the special tool (see page 18-10).

16. Remove the lock pin (A) from the upper arm ball joint, and remove the castle nut (B).

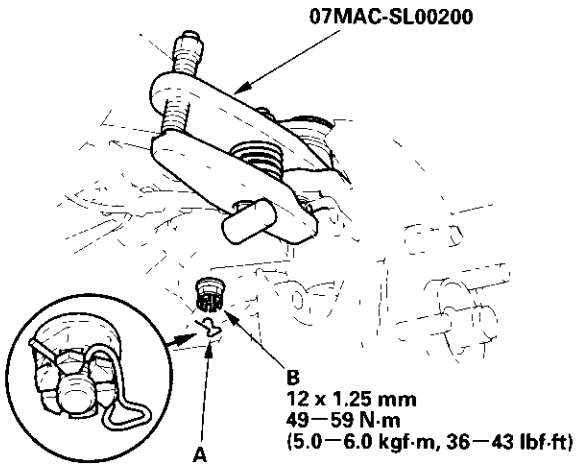


17. Remove the upper arm ball joint from the knuckle using the special tool (see page 18-10).

18. Remove the driveshaft outboard joint (A) from the knuckle by tapping the driveshaft end with a plastic hammer (B) while pulling the knuckle (C) outward.

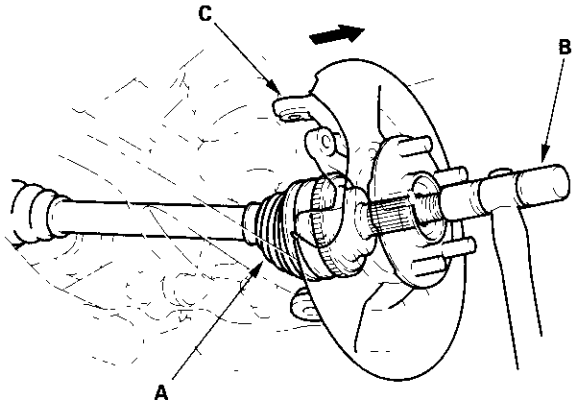


19. Separate the hub (A) from the knuckle (B) using the special tool and a hydraulic press. Be careful not to deform the splash guard. Hold the hub to keep it from falling when pressed clear.

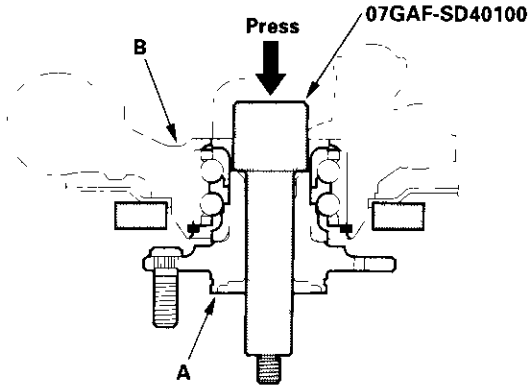


20. Remove the screws (A), snap ring (B), and the splash guard (C) from the knuckle (D).

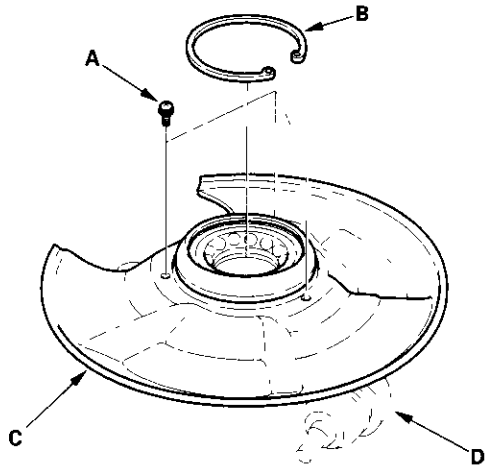


(cont'd)

## Knuckle/Hub Replacement (cont'd)

21. Press the wheel bearing (A) out of the knuckle (B) using the special tools and a press.

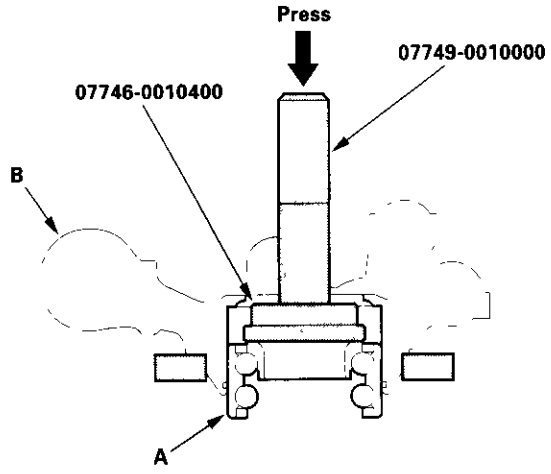


22. Press the wheel bearing inner race (A) out of the hub (B) using the special tool, a commercially available bearing separator (C), and a press.

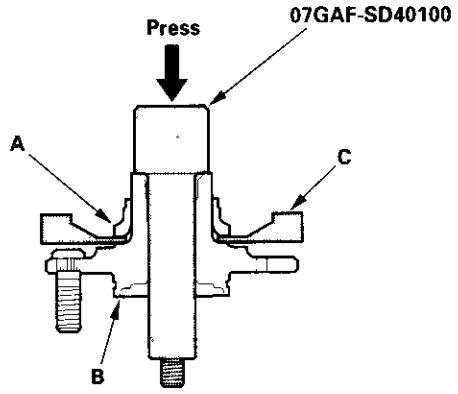


23. Wash the knuckle and hub thoroughly in high flash point solvent before reassembly.

24. Press a new wheel bearing (A) into the knuckle (B) using the old bearing (C), a steel plate (D), the special tool, and a press. Place the wheel bearing on the knuckle with the pack seal side (metal color) facing inside. Be careful not to damage the sleeve of the pack seal.

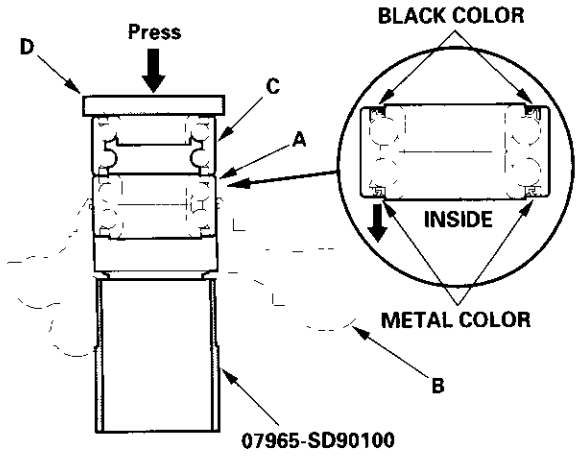


25. Install the snap ring (A) securely in the knuckle (B).

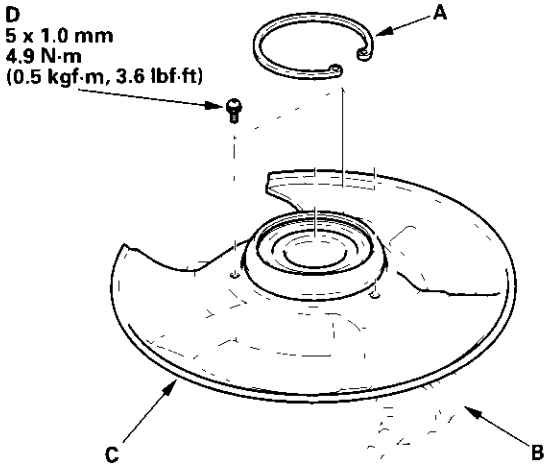


26. Install the splash guard (C), and tighten the screws (D).

27. Install the hub (A) onto the knuckle (B) using the special tools and a hydraulic press. Be careful not to deform the splash guard.

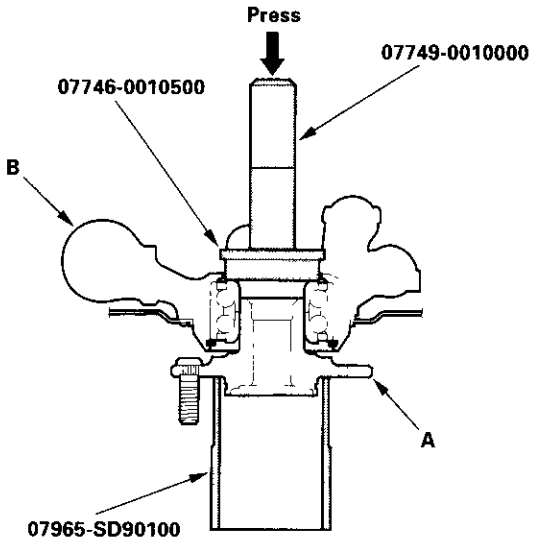


28. Install the knuckle in the reverse order of removal paying particular attention to the following items:

- Be careful not to damage the ball joint boot when installing the knuckle.
- Use a new spindle nut on reassembly.
- Before installing the new spindle nut, apply a small amount of engine oil to the seating surface of the nut. After tightening, use a drift to stake the spindle nut shoulder against the driveshaft.
- Tighten all mounting hardware to the specified torque values.
- Tighten the castle nut to the lower torque specification, then tighten only far enough to align the slot with the ball joint pin or clip hole. Do not align by loosening the castle nut.
- Install a new cotter pin or lock pin on the castle nut after torquing.
- Before installing the brake disc, clean the mating surface of the hub and the inside of the brake disc.
- Before installing the wheel, clean the mating surface of the brake disc and the inside of the wheel.
- Check the wheel alignment, and adjust it if necessary (see page 18-5).

## Ball Joint Boot Replacement

**Special Tools Required**
Ball joint boot clip guide, 07GAG-SD40700

1. Remove the boot clip and the boot.
2. Pack the interior and lip of the new boot (A) with fresh grease. Do not contaminate the lower collar of the boot (B) with grease.

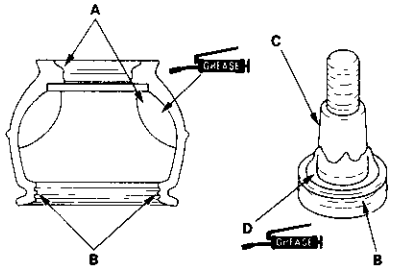


3. Wipe the grease off the tapered section of the pin (C), and pack the base (D) with fresh grease.
4. Install the boot onto the ball joint pin, then squeeze it gently to force out any air. Do not let dirt or other foreign materials get into the boot.
5. For the upper and lower arm ball joint, adjust the special tool with the adjusting bolt (A) until its base is just above the groove around the bottom of the boot. Then slide the clip over the tool into the position (B) on the boot.

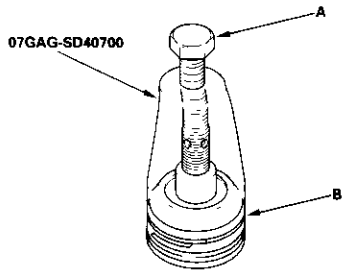


6. For the control arm ball joint, set the boot on the joint pin, and press it with the special tool until there is no gap at the bottom of the boot (A).

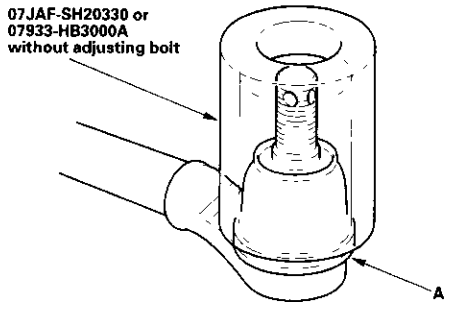


7. After installing a boot, wipe any grease off the exposed portion of the ball joint pin.

## Stabilizer Bar Replacement

1. Raise the rear of the vehicle, and support it with safety stands in the proper locations (see page 1-13). Remove the rear wheel.

2. Remove the self-locking nuts (A) while holding the joint pins (B) with a hex wrench (C), and disconnect the stabilizer links (D) from the stabilizer bar (E) on the right and left.

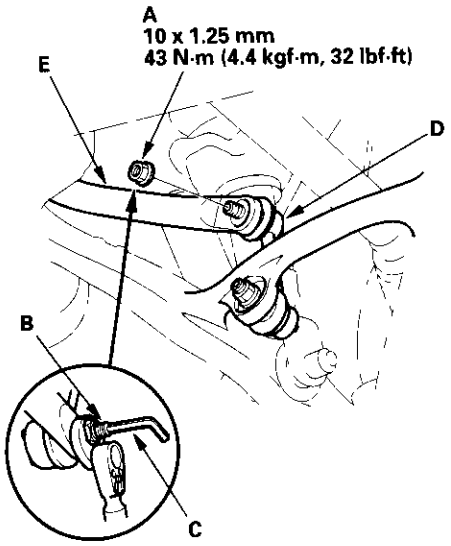


3. Remove the bolts (A) and bushing holders (B), then remove the bushings (C) and the stabilizer bar (D).

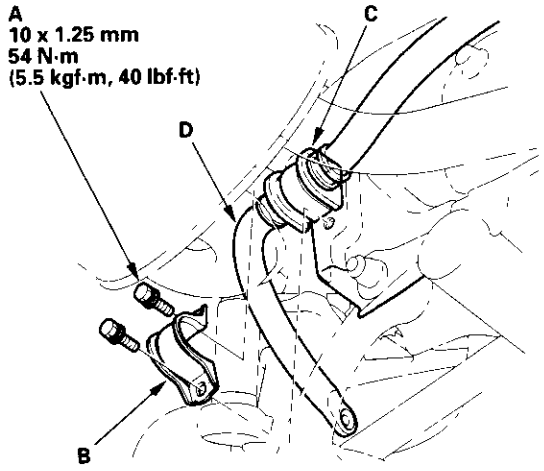


4. Install the stabilizer bar in the reverse order of removal.

   NOTE: Refer to Stabilizer Link Replacement to connect the stabilizer bar to the links.

## Stabilizer Link Removal/Installation

1. Raise the rear of the vehicle, and support it with safety stands in the proper locations (see page 1-13). Remove the rear wheel.

2. Remove the self-locking nut (A) and flange nut (B) while holding the respective joint pins (C) with a hex wrench (D), and disconnect the stabilizer link (E) from the stabilizer bar (F) and the lower arm (G).

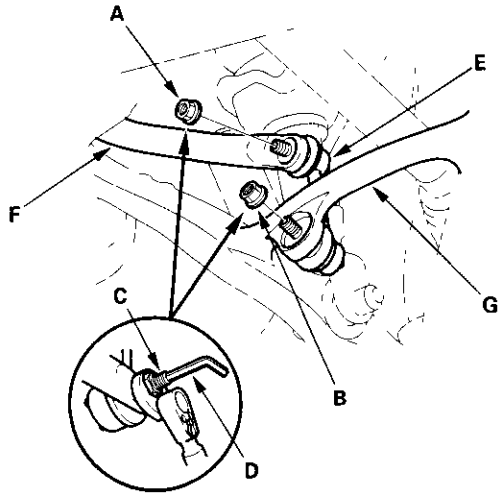


3. Install the stabilizer link to the stabilizer bar and lower arm with the joint pins set at the center of their range.

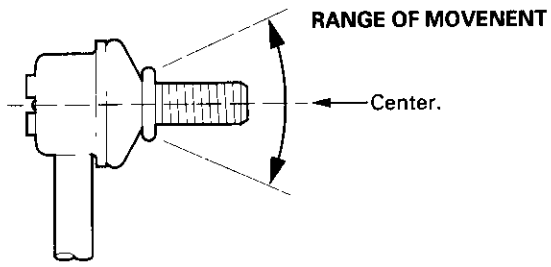

4. Install the self-locking nut and flange nut, and lightly tighten.

5. Place a jack under the lower arm, and raise the suspension to load the stabilizer bar.

6. Tighten the self-locking nut (A) and flange nut (B) to the specified torque values while holding the respective joint pins (C) with a hex wrench (D).

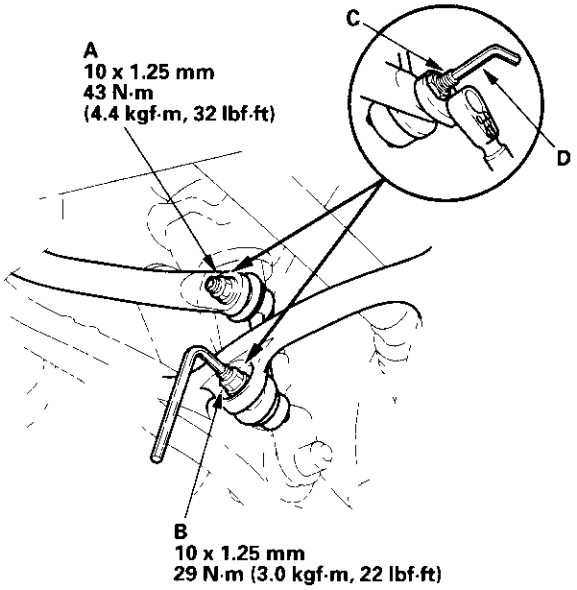


7. After 5 minutes of driving, re-tighten the self-locking nut of the joint connected to the stabilizer bar again to the specified torque value.

**Special Tools Required**
- Ball joint remover, 28 mm 07MAC-SL00200

1. Raise the rear of the vehicle, and support it with safety stands in the proper locations (see page 1-13). Remove the rear wheel.

2. Remove the flange nut (A) while holding the joint pin (B) with a hex wrench (C), and disconnect the stabilizer link (D) from the lower arm (E).

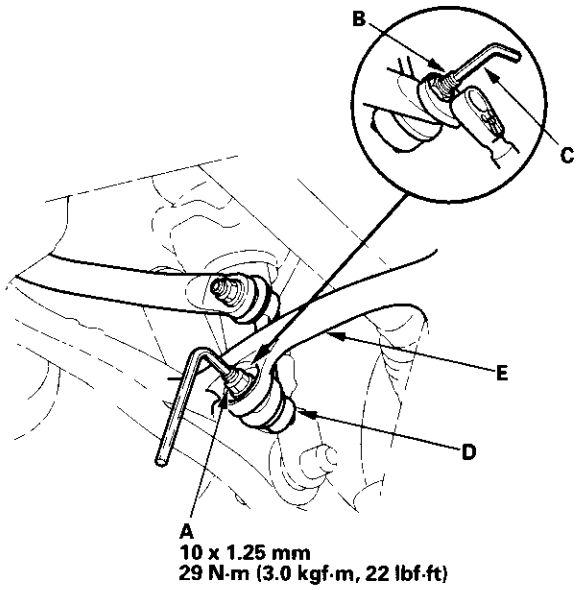


3. Remove the flange bolt (A), and disconnect the damper (B) from the lower arm (C).

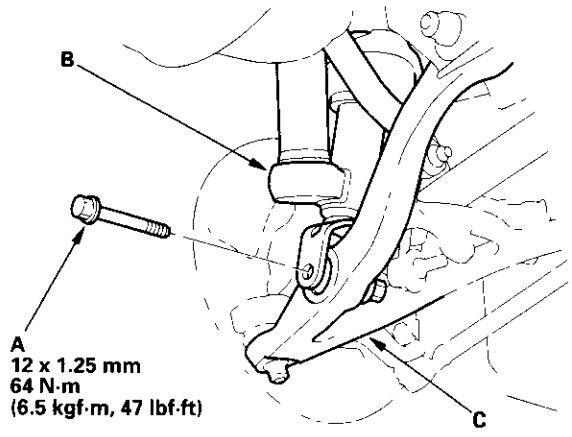


(cont'd)

## Lower Arm Removal/Installation (cont'd)

4. Remove the cotter pin (A) from the lower arm ball joint, and remove the castle nut (B).

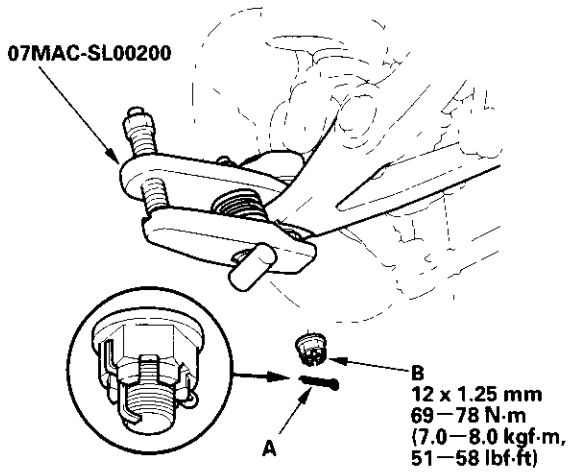


5. Remove the lower arm ball joint from the knuckle using the special tool (see page 18-10).

6. Remove the flange bolt (A), self-locking nut (B), cam plate (C), adjusting bolt (D), and the lower arm (E).

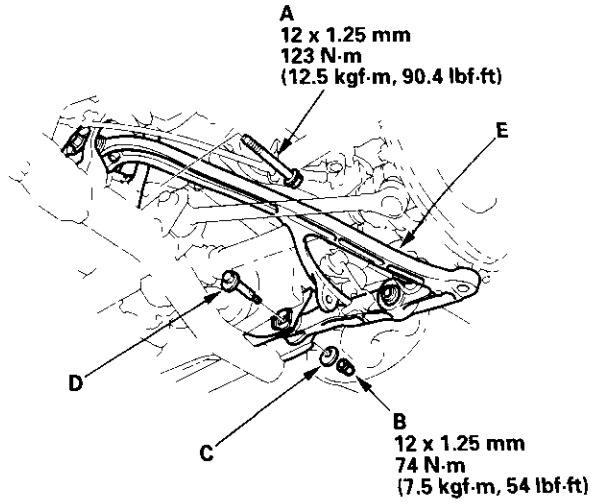


7. Install the lower arm in the reverse order of removal paying particular attention to the following items:

- Be careful not to damage the ball joint boot when connecting the lower arm to the knuckle.
- Use a new self-locking nut on reassembly.
- Tighten all mounting hardware to the specified torque values.
- First install all the components and lightly tighten bolts and nuts, then place a jack under the lower arm, and raise the suspension to load the weight before fully tightening to the specified torque values.
- Tighten the castle nut to the lower torque specification, then tighten only far enough to align the slot with the ball joint pin hole. Do not align by loosening the castle nut.
- Install a new cotter pin on the castle nut after torquing.
- Before installing the wheel, clean the mating surface of the brake disc and the inside of the wheel.
- Check the wheel alignment, and adjust it if necessary (see page 18-5).

## Upper Arm Removal/Installation

**Special Tools Required**
- Ball joint remover, 28 mm 07MAC-SL00200

1. Raise the rear of the vehicle, and support it with safety stands in the proper locations (see page 1-13). Remove the rear wheel.

2. Remove the flange bolts (A) and the wheel sensor harness (B) from the upper arm (C).

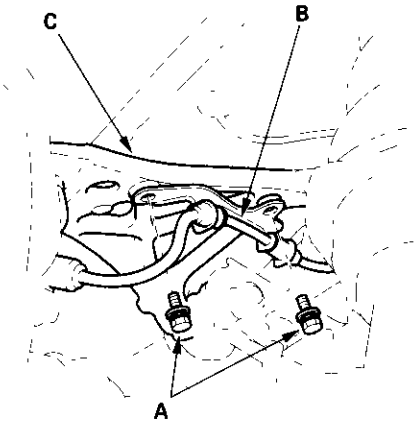


3. Remove the lock pin (A) from the upper arm ball joint, and remove the castle nut (B).

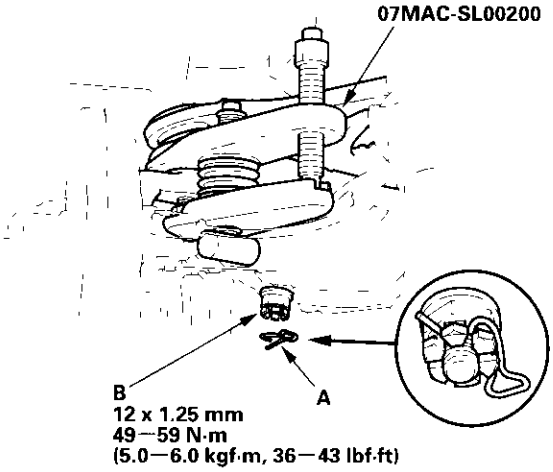


4. Remove the upper arm ball joint from the knuckle using the special tool (see page 18-10).

5. Remove the flange bolts (A), and the upper arm.

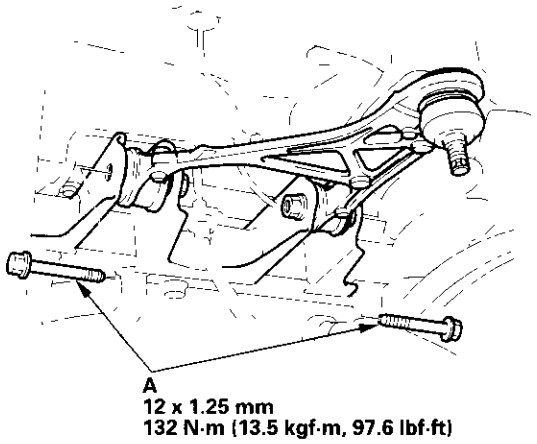


6. Install the upper arm in the reverse order of removal paying particular attention to the following items:

- Be careful not to damage the ball joint boot when connecting the upper arm to the knuckle.
- Tighten all mounting hardware to the specified torque values.
- First install all the suspension components and lightly tighten bolts and a nut, then place a jack under the lower arm, and raise the suspension to load the weight before fully tightening to the specified torque values.
- Tighten the castle nut to the lower torque specification, then tighten only far enough to align the slot with the ball joint pin hole. Do not align by loosening the castle nut.
- Install a new lock pin on the castle nut after torquing.
- Before installing the wheel, clean the mating surface of the brake disc and the inside of the wheel.
- Check the wheel alignment, and adjust it if necessary (see page 18-5).

## Control Arm Replacement

**Special Tools Required**
• Ball joint remover, 28 mm 07MAC-SL00200

1. Raise the rear of the vehicle, and support it with safety stands in the proper locations (see page 1-13). Remove the rear wheel.

2. Remove the self-locking nut (A), cam plate (B), and adjusting bolt (C), then disconnect the control arm (D) from the frame.

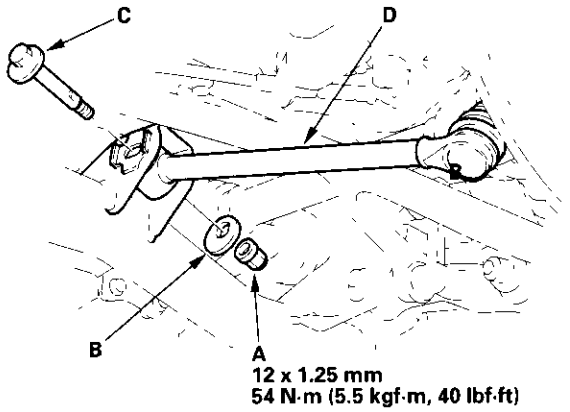


3. Remove the lock pin (A) from the control arm ball joint, and remove the castle nut (B).

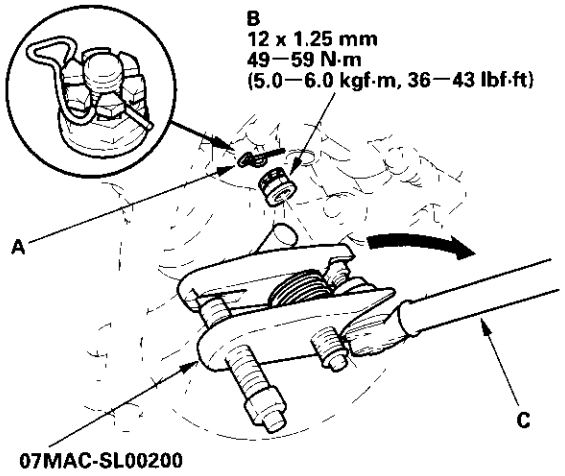


4. Remove the control arm ball joint from the knuckle using the special tool (see page 18-10).

   NOTE: Turn the control arm (C) outward to install the ball joint remover.

5. Remove the control arm.

6. Install the control arm in the reverse order of removal paying particular attention to the following items:

   - Be careful not to damage the ball joint boot when connecting the control arm to the knuckle.
   - Use a new self-locking nut on reassembly.
   - Tighten all mounting hardware to the specified torque values.
   - First install all the suspension components and lightly tighten a bolt and nuts, then place a jack under the lower arm, and raise the suspension to load the weight before fully tightening to the specified torque values.
   - Tighten the castle nut to the lower torque specification, then tighten it only far enough to align the slot with the ball joint pin hole. Do not align by loosening the castle nut.
   - Install a new lock pin on the castle nut after torquing.
   - Before installing the wheel, clean the mating surface of the brake disc and the inside of the wheel.
   - Check the wheel alignment, and adjust it if necessary (see page 18-5).

# Damper/Spring Replacement

## Exploded View

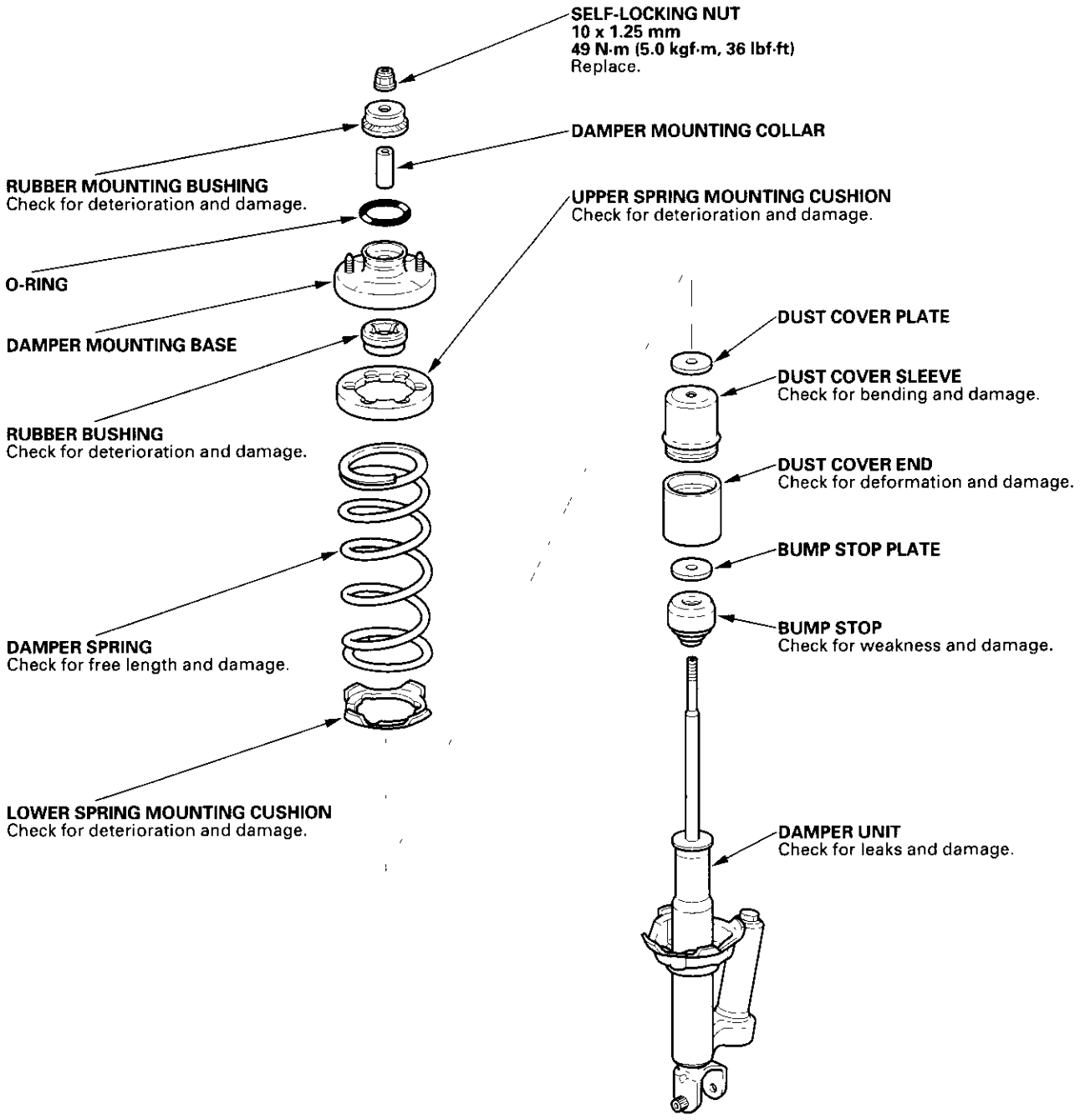


(cont'd)

## Damper/Spring Replacement (cont'd)

**Special Tools Required**
Strut spring compressor, Branick MST-580A or Model 7200, or equivalent, commercially available

### Removal

1. Raise the rear of the vehicle, and support it with safety stands in the proper locations (see page 1-13). Remove the rear wheel.
2. Remove the spare tire from the trunk.
3. Remove the flange nuts (A) from the top of the damper.

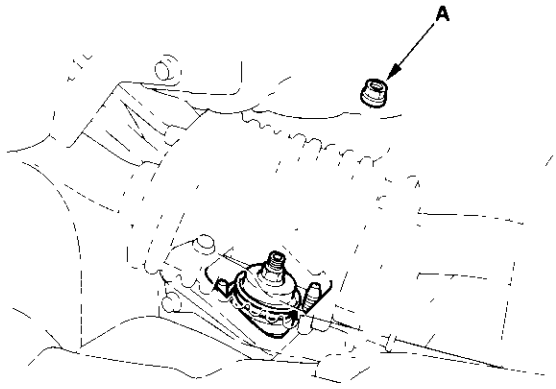


4. Remove the flange bolt (A) at the bottom of the damper.

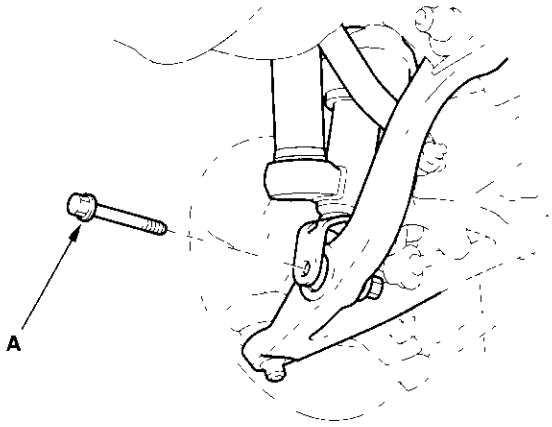


5. Lower the lower arm, and remove the damper assembly (A).

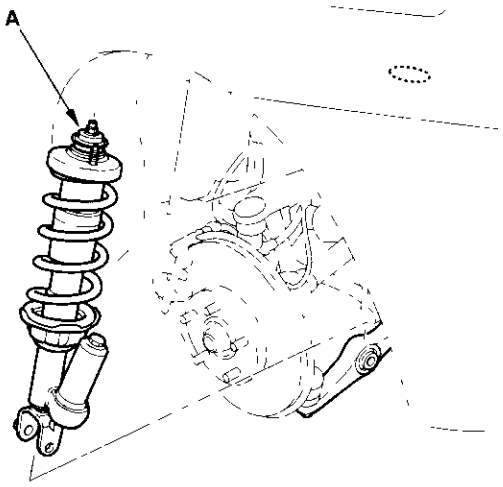

## Disassembly/Inspection

1. Compress the damper spring with the commercially available strut spring compressor (A) according to the manufacturer's instructions, then remove the self-locking nut (B). Do not compress the spring more than necessary to remove the nut.

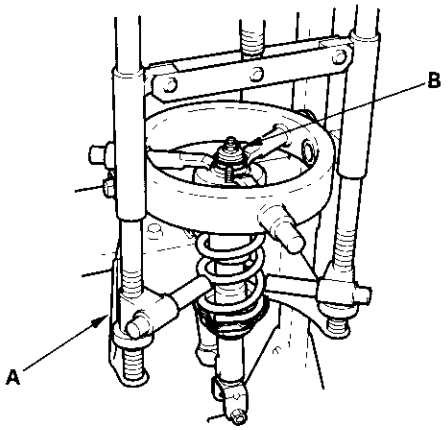


2. Release the pressure from the strut spring compressor, then disassemble the damper as shown in the Exploded View.
3. Reassemble all of the parts, except the spring.
4. Compress the damper assembly by hand, and check for smooth operation through a full stroke, both compression and extension. The damper should extend smoothly and constantly when compression is released. If it does not, the gas is leaking and the damper should be replaced.
5. Check for oil leaks, abnormal noises, or binding during these tests.

## Reassembly

1. Assemble all of the damper components except the self-locking nut onto the damper unit. Align the spring bottom end (A), the stepped part of the lower spring mounting cushion, and the step on the lower spring seat (B).

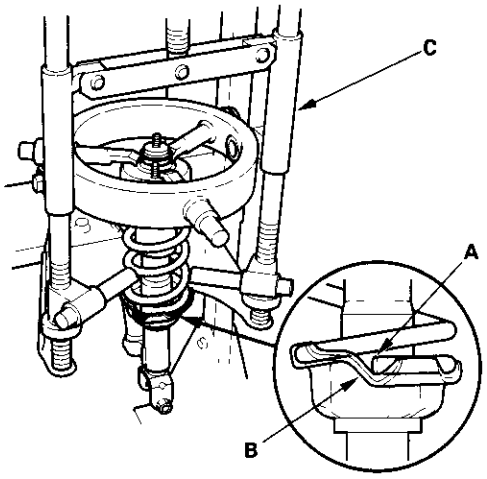


2. Install the damper assembly on a commercially available strut spring compressor (C).
3. Position the damper mounting base as shown.

**VIEWING FROM TOP**

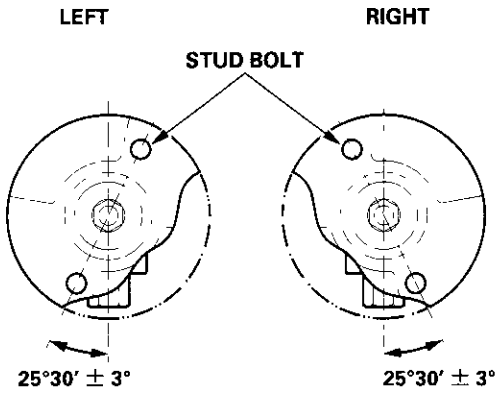


4. Compress the damper spring with the spring compressor.

(cont'd)

## Damper/Spring Replacement (cont'd)

5. Install a new self-locking nut (A) on the damper shaft.

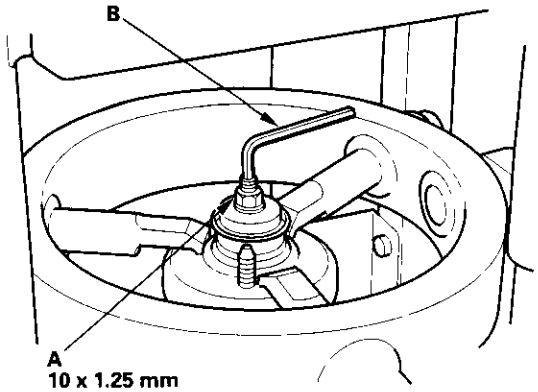


6. Hold the damper shaft with a hex wrench (B), and tighten the self-locking nut to the specified torque.

### Installation

1. Lower the lower arm, and position the damper assembly (A) in the body.

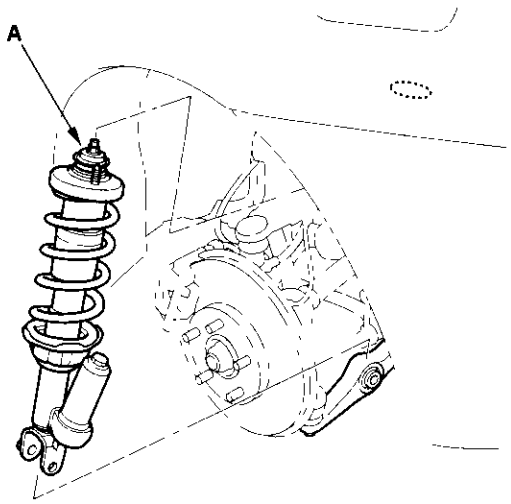


2. Loosely install the flange nuts (A) onto the damper studs.

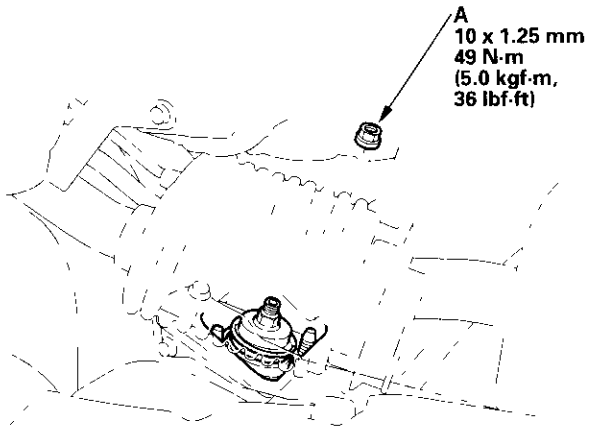

3. Position the bottom of the damper on the lower arm (A).

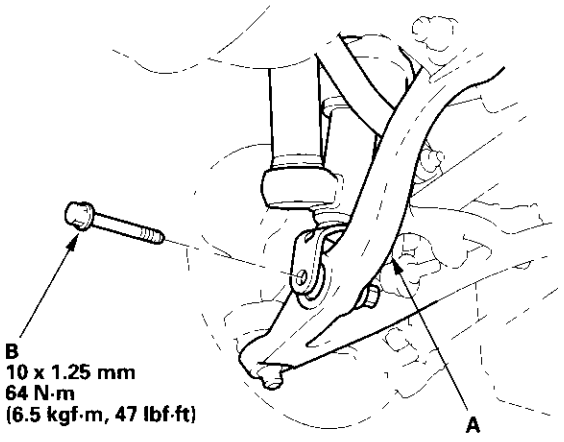


4. Install the flange bolt (B), and lightly tighten.
5. Raise the suspension until the vehicle just lifts off the safety stand.
6. Tighten the flange bolt (B) to the specified torque.
7. Tighten the flange nuts on the top of the damper to the specified torque.

# Brakes

## Conventional Brake Components


Special Tools ..... 19-2
Component Location Index ..... 19-3
Brake System Inspection and Tests ..... 19-4
Brake Pedal and Brake Pedal Position Switch Adjustment ..... 19-6
Parking Brake Check and Adjustment ..... 19-7
Brake System Bleeding ..... 19-8
Brake System Indicator Circuit Diagram ..... 19-10
Parking Brake Switch Test ..... 19-11
Brake Fluid Level Switch Test ..... 19-11
Front Brake Pads Inspection/ Replacement ..... 19-12
Front Brake Disc Inspection ..... 19-14
Front Brake Caliper Overhaul ..... 19-15
Master Cylinder/Brake Booster Replacement ..... 19-16
Master Cylinder Inspection ..... 19-17
Master Cylinder Pushrod Clearance Adjustment ..... 19-17
Brake Booster Test ..... 19-19
Rear Brake Pads Inspection/ Replacement ..... 19-20
Rear Brake Disc Inspection ..... 19-22
Rear Brake Caliper Removal/Installation ..... 19-23
Rear Brake Caliper Overhaul ..... 19-24
Brake Hoses and Lines Inspection ..... 19-26
Brake Hose Replacement ..... 19-27
Parking Brake Cable Replacement ..... 19-28

**ABS (Anti-lock Brake System) Components ..... 19-31**

# Conventional Brake Components

## Special Tools

| Ref.No. | Tool Number | Description | Qty |
|---|---|---|---|
| ① | 07JAG-SD40100 | Pushrod Adjustment Gauge | 1 |

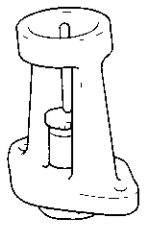

①

## Component Location Index

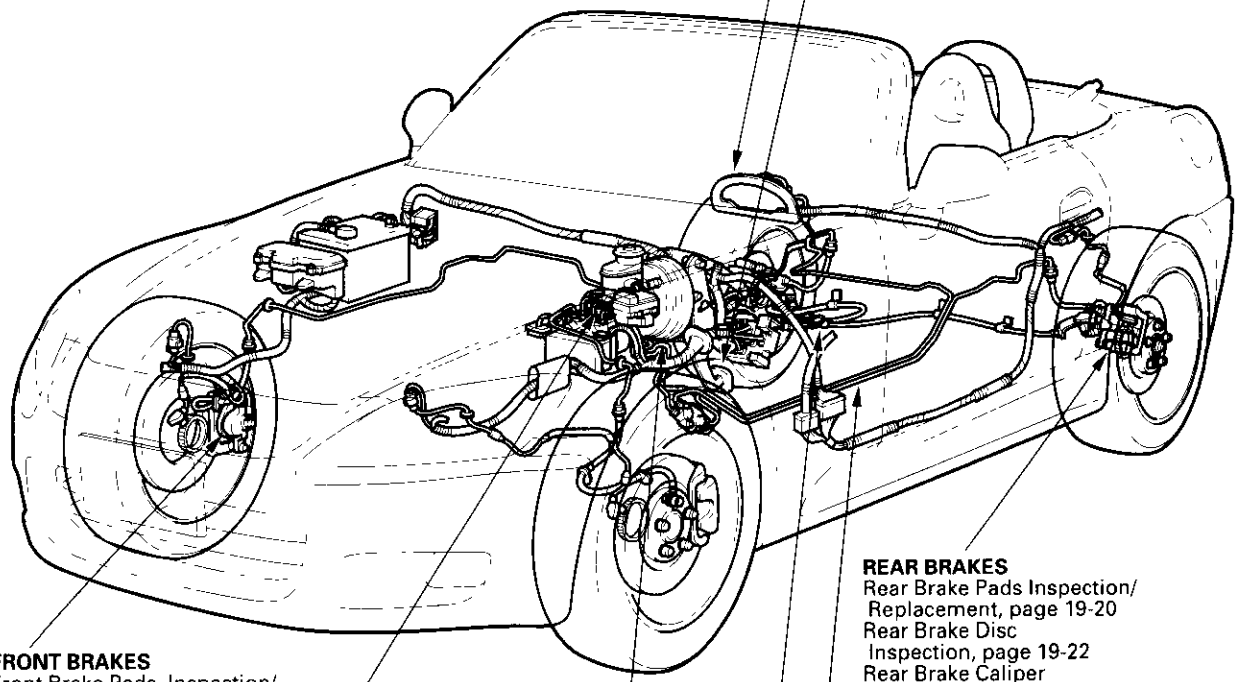

**INDICATOR**
Brake System Indicator Circuit Diagram, page 19-10
Parking Brake Switch Test, page 19-11
Brake Fluid Level Switch Test, page 19-11

**BRAKE PEDAL**
Brake Pedal and Brake Pedal Position Switch Adjustment, page 19-6

**FRONT BRAKES**
Front Brake Pads, Inspection/ Replacement, page 19-12
Front Brake Disc Inspection, page 19-14
Front Brake Caliper Overhaul, page 19-15

**MASTER CYLINDER**
Brake System Bleeding, page 19-8
Master Cylinder Replacement, page 19-16
Master Cylinder Inspection, page 19-17
Master Cylinder Pushrod Clearance Adjustment, page 19-17

**BRAKE BOOSTER**
Brake Booster Replacement, page 19-16
Brake Booster Test, page 19-19

**PARKING BRAKE CABLE**
Parking Brake Check and Adjustment, page 19-7
Parking Brake Cable Replacement, page 19-28

**BRAKE HOSES/LINES**
Brake Hoses and Lines Inspection, page 19-26
Brake Hoses Replacement, page 19-27

**REAR BRAKES**
Rear Brake Pads Inspection/ Replacement, page 19-20
Rear Brake Disc Inspection, page 19-22
Rear Brake Caliper Removal/Installation, page 19-23
Rear Brake Caliper Overhaul, page 19-24

## Brake System Inspection and Tests

**Component Inspections:**

| Component | Procedure | Also check for: |
|---|---|---|
| Master Cylinder | Look for damage or signs of fluid leakage at:<br>• Reservoir or reservoir grommets<br>• Line joints<br>• Between master cylinder and booster | Bulging seal at reservoir cap. This is a sign of fluid contamination. |
| Brake Hoses | Look for damage or signs of fluid leakage at:<br>• Line joints and banjo bolt connections<br>• Hoses and lines, also inspect for twisting or damage | Bulging, twisted, or bent lines. |
| Caliper | Look for damage or signs of fluid leakage at:<br>• Piston seal<br>• Banjo bolt connections<br>• Bleeder screw | Seized or sticking caliper pins. |
| ABS Modulator | Look for damage or signs of fluid leakage at:<br>• Line joints<br>• Modulator | |

### Brake System Test

**Brake pedal sinks/fades when braking**

1. Start the engine, and let it warm up to operating temperature.
2. Attach a 2-inch piece of masking tape along the bottom of the steering wheel, and draw a horizontal reference mark across it.
3. With the transmission in Neutral, press and hold the brake pedal lightly (about the same pressure needed to keep an A/T-equipped car from creeping), then release the parking brake.
4. While still holding the brake pedal, hook the end of the tape measure behind it. Then pull the tape up to the steering wheel, noting where the tape measure lines up with the reference mark you made on the masking tape.
5. Apply steady pressure to the brake pedal for 3 minutes.
6. Watch the tape measure.
   - if it moves less than 10 mm, the master cylinder is OK.
   - if it moves more than 10 mm replace the master cylinder.

**Rapid brake pad wear, Vehicle vibration (after a long drive), or High, hard brake pedal**

1. Drive the vehicle until the brakes drag or until the pedal is high and hard. This can take 20 or more brake pedal applications during an extended test drive.

2. With the engine running, raise the vehicle on a lift, and spin all four wheels by hand.

   *Is there brake drag at any of the wheels?*

   **YES** – Go to step 3.

   **NO** - Look for other causes of the pad wear, high pedal, or vehicle vibration. ■

3. Turn the ignition switch to lock (0), pump the brake pedal to deplete the vacuum in the brake booster, and then spin the wheels again to check for brake drag.

   *Is there brake drag at any of the wheels?*

   **YES** – Go to step 4.

   **NO** – Replace the brake booster. ■

4. Without removing the brake lines, unbolt and separate the master cylinder from the booster, then spin the wheels to check for brake drag.

   *Is there brake drag at any of the wheels?*

   **YES** - Go to step 5.

   **NO** – Check the brake pedal position switch adjustment and pedal free play. ■

5. Loosen the hydraulic lines at the master cylinder, then spin the wheels to check for brake drag.

   *Is there brake drag at any of the wheels?*

   **YES** – Go to step 6.

   **NO** – Replace the master cylinder. ■

6. Loosen the bleeder screws at each caliper, then spin the wheels to check for brake drag.

   *Is there brake drag at any of the wheels?*

   **YES** – Disassemble and repair the caliper on the wheel(s) with brake drag. ■

   **NO** – Look for and replace any damaged brake lines. If all brake lines are OK, replace the ABS modulator. ■

## Brake Pedal and Brake Pedal Position Switch Adjustment

### Pedal Height

1. Disconnect the brake pedal position switch connector, loosen the brake pedal position switch locknut (A), and back off the brake pedal position switch (B) until it is no longer touching the brake pedal.

2. Lift up the carpet and the insulator cutout (C). Measure the pedal height (D) from the middle of the right side cener of the pedal pad (E).

   **Standard Pedal Height**
   **(with carpet removed): 179 mm (7 1/16 in.)**

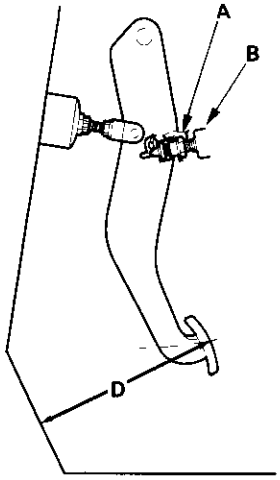


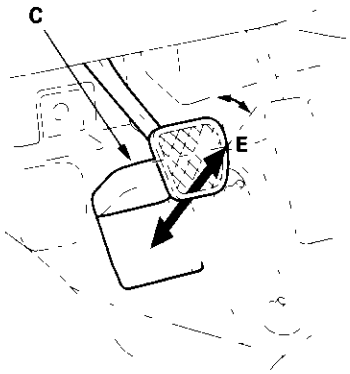


3. Loosen the pushrod locknut (A), and screw the pushrod in or out with pliers until the standard pedal height from the floor is reached. After adjustment, tighten the locknut firmly. Do not adjust the pedal height with the pushrod pushed in.

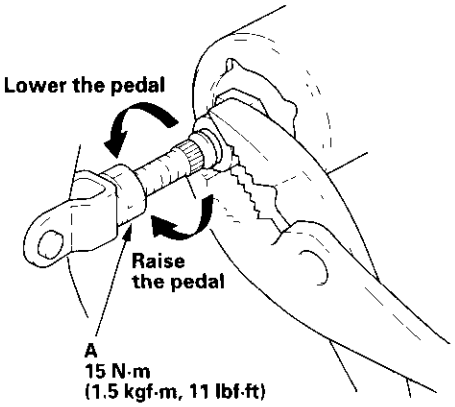


4. Screw in the brake pedal position switch until its plunger is fully pushed in (threaded end (A) touching the pad (B) on the pedal arm). Then back off the switch 1/4 turn to make 0.3 mm (0.01 in.) of clearance between the threaded end and the pad. Tighten the locknut firmly.

   NOTE: The brakes will drag if there is no clearance. Connect the brake pedal position switch connector. Make sure that the brake lights go off when the pedal is released.

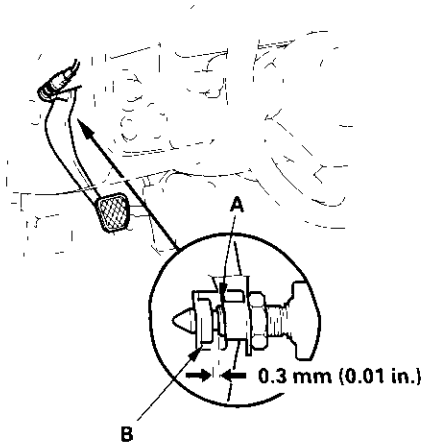


5. Check the brake pedal free play.

# Parking Brake Check and Adjustment

## Pedal Free Play

1. With the engine stopped, inspect the pedal free play (A) on the pedal pad (B) by pushing the pedal by hand.

   **Free Play: 1—5 mm (1/16—3/16 in.)**

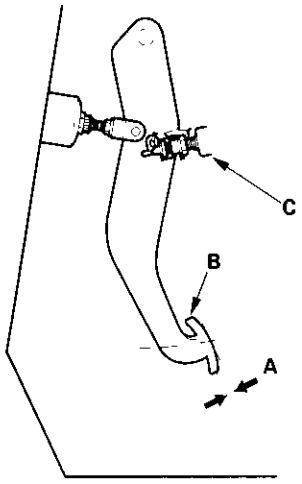


2. If the pedal free play is out of specification, adjust the brake pedal position switch (C). If the pedal free play is insufficient, it may result in brake drag.

## Check

1. Pull the parking brake lever (A) with 196 N (20 kgf, 44 lbf) force to fully apply the parking brake. The parking brake lever should be locked within the specified clicks (B).

   **Lever Locked Clicks: 9—13**

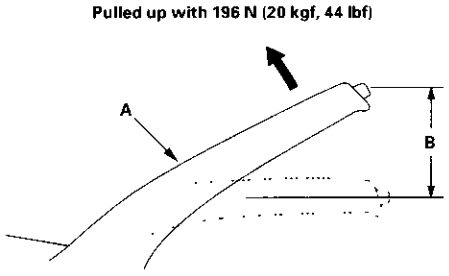


2. Adjust the parking brake if the lever clicks are out of specification.

## Adjustment

NOTE: After rear brake caliper servicing, remove the center console, loosen the parking brake adjusting nut, start the engine, and press the brake pedal several times to set the self-adjusting brake before adjusting the parking brake.

1. Block the front wheels, then raise the rear of the vehicle, and support it with safety stands in the proper locations (see page 1-13).

2. Make sure the parking brake arm (A) on the rear brake caliper contacts the brake caliper pin (B).

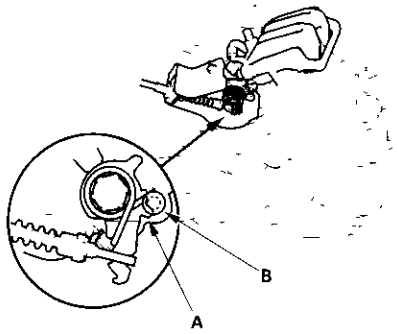


(cont'd)

## Parking Brake Check and Adjustment (cont'd)

3. Pull the parking brake lever up one click.
4. Remove the center console (see page 20-76).
5. Tighten the adjusting nut (A) until the parking brakes drag slightly when the rear wheels are turned.

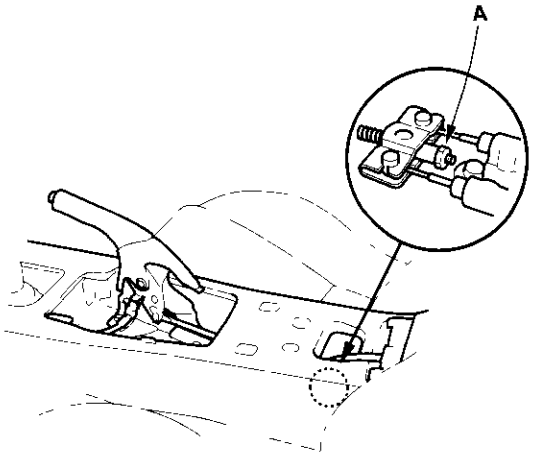


6. Release the parking brake lever fully, and check that the parking brakes do not drag when the rear wheels are turned. Readjust if necessary.
7. Make sure the parking brakes are fully applied when the parking brake lever is pulled up fully.
8. Reinstall the center console.

## Brake System Bleeding

NOTE:
- Do not reuse the drained fluid.
- Always use Honda DOT 3 Brake Fluid.
- Make sure no dirt or other foreign matter is allowed to contaminate the brake fluid.
- Do not spill brake fluid on the vehicle; it may damage the paint; if brake fluid does contact the paint, wash it off immediately with water.
- The reservoir on the master cylinder must be at the MAX (upper) level mark at the start of the bleeding procedure and checked after bleeding each brake caliper. Add fluid as required.

1. Make sure the brake fluid level in the reservoir is at the MAX (upper) level line (A).

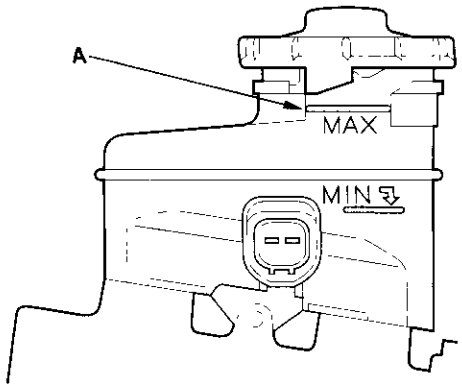

2. Have someone slowly pump the brake pedal several times, then apply steady pressure.

3. Starting at the left-front, loosen the brake bleed screw to allow air to escape from the system. Then tighten the bleed screw securely.

4. Repeat the procedure for each wheel in the sequence shown below until air bubbles no longer appear in the fluid.

5. Refill the master cylinder reservoir to the MAX (upper) level line.

**BLEEDING SEQUENCE:**

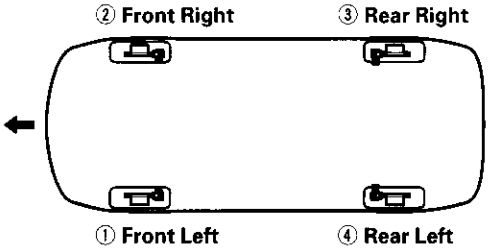


**Pressure Bleeding**

Install the appropriate power probe pressure bleeder adapter onto the master cylinder.

Use the bleeding sequence above, and follow the bleeding instructions that come with your pressure bleeder.

**Bleed Screw Locations**
**FRONT:**

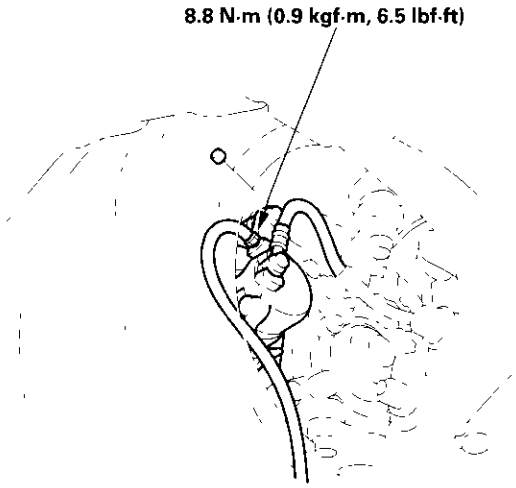


**REAR:**

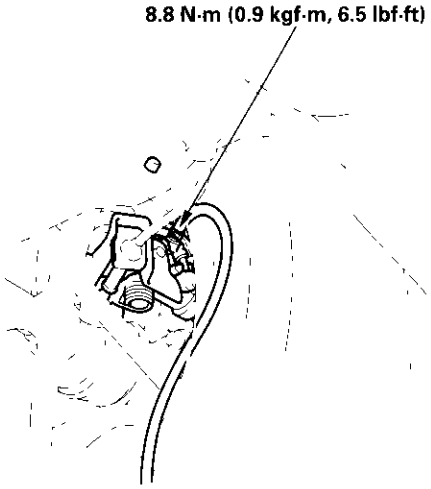

## Brake System Indicator Circuit Diagram

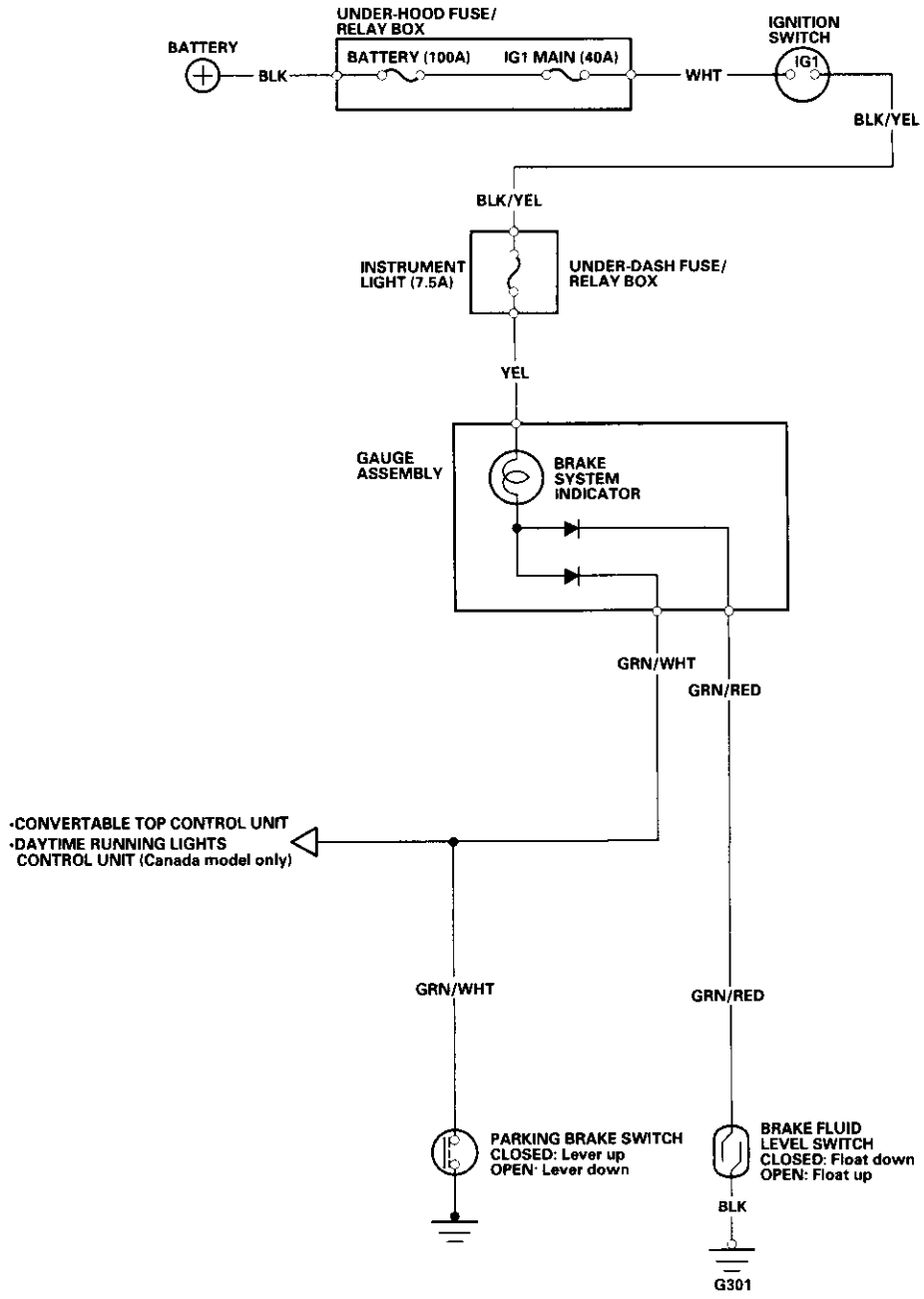

## Parking Brake Switch Test

1. Remove the center console, and disconnect the connector (A) from the switch (B).

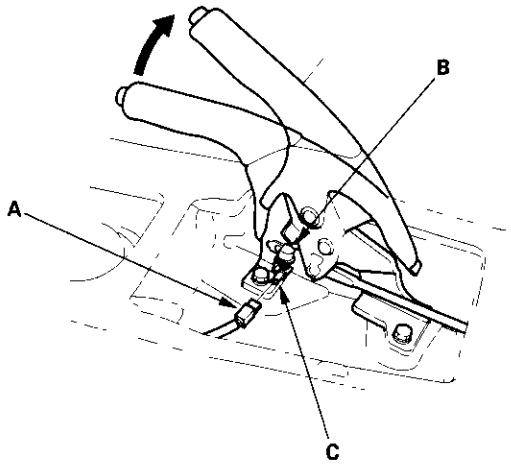


2. Check for continuity between the positive terminal (C) and body ground:

   - With the brake lever up, there should be continuity.
   - With the brake lever down, there should be no continuity.

   NOTE (Canada): If the parking brake switch is OK, but the brake system indicator does not work, do the input test for the daytime running lights control unit (see page 22-66).

## Brake Fluid Level Switch Test

Check for continuity between the terminals (A) with the float in the down position and the up position.

- Remove the brake fluid completely from the reservoir. With the float down, there should be continuity.
- Fill the reservoir to the MAX (upper) level (B). With the float up, there should be no continuity.

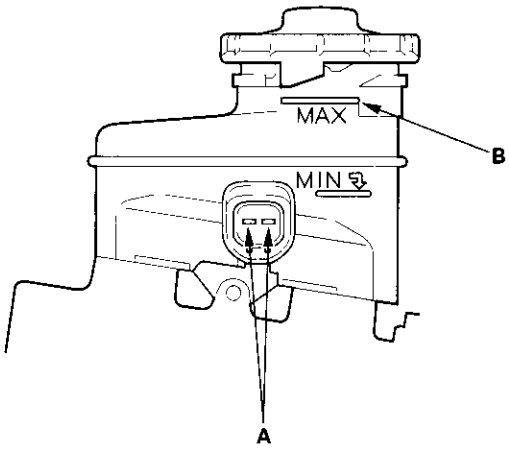

## Front Brake Pads Inspection/Replacement

**⚠CAUTION**

Frequent inhalation of brake pad dust, regardless of material composition, could be hazardous to your health.
- Avoid breathing dust particles.
- Never use an air hose or brush to clean brake assemblies. Use an OSHA-approved vacuum cleaner.

1. Loosen the front wheel nuts slightly. Raise the front of the vehicle, and support it with safety stands in the proper locations (see page 1-13). Remove the front wheels.

2. Hold the caliper pin (A) with a wrench, being careful not to damage the pin boot. Remove the caliper bolt (B) with another wrench, and pivot the caliper (C) up out of the way. Check the hoses and pin boots for damage and deterioration.

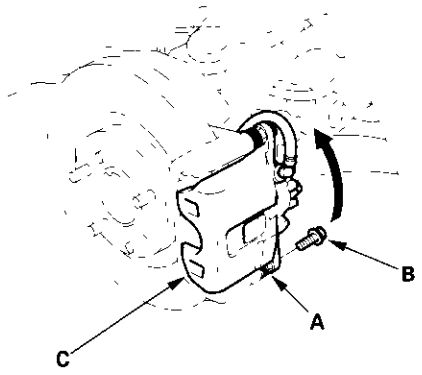


3. Remove the pad shims (A), pad retainers (B), and pads (C).

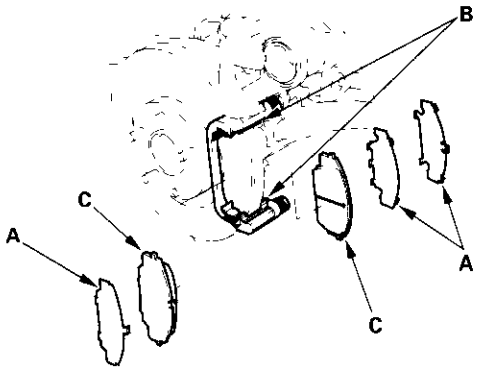


4. Using vernier calipers, measure the thickness of each brake pad lining. The measurement does not include the pad backing plate (A) thickness.

**Brake Pad Thickness:**
**Standard: 9.5 – 10.5 mm (0.37 – 0.41 in.)**
**Service Limit: 1.6 mm (0.06 in.)**

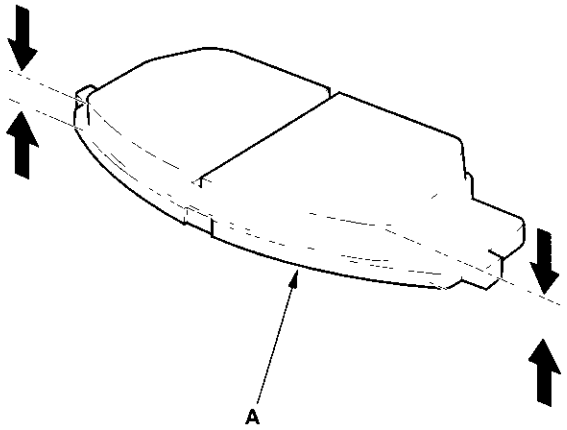


5. If the brake pad thickness is less than the service limit, replace the front pads as a set.

6. Clean the caliper thoroughly; remove any rust, and check for grooves and cracks.

7. Check the brake disc for damage and cracks.

8. Install the pad retainers (A).

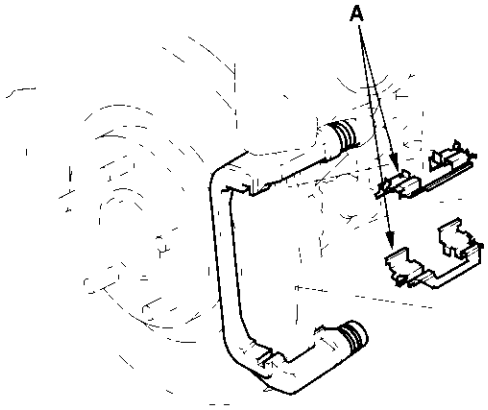

9. Apply Molykote M77 grease or Daikalub 528D grease to the pad side of the shims (A) and back of the pads (B). Wipe excess grease off the shim. Contaminated brake discs or pads reduce stopping ability. Keep grease off of the discs and pads.

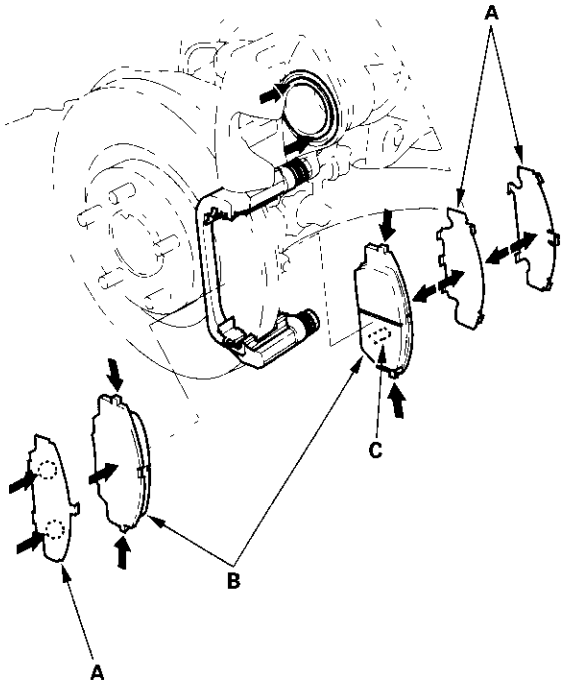


10. Install the brake pads and pad shims correctly. Install the pad with the wear indicator (C) on the inside.

    If you are reusing the pads, always reinstall the brake pads in their original positions to prevent a momentary loss of braking efficiency.

11. Push in the piston (A) so that the caliper will fit over the pads. Make sure the piston boot is in position to prevent damaging it when pivoting the caliper down.

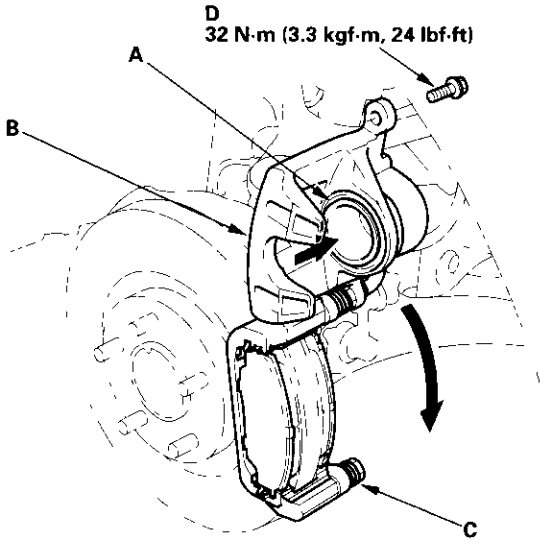


12. Pivot the caliper (B) down into position, being careful not to damage the pin boot. Hold the caliper pin (C) with a wrench, being careful not to damage the pin boot. Install the caliper bolt (D), with another wrench, and torque it to proper specification.

13. Press the brake pedal several times to make sure the brakes work, then road-test.

    NOTE: Engagement of the brake may require a greater pedal stroke immediately after the brake pads have been replaced as a set. Several applications of the brake pedal will restore the normal pedal stroke.

14. After installation, check for leaks at hose and line joints or connections, and retighten if necessary.

## Front Brake Disc Inspection

### Runout

1. Loosen the front wheel nuts slightly, then raise the vehicle, and support it with safety stands in the proper locations (see page 1-13). Remove the front wheels.
2. Remove the brake pads (see page 19-12).
3. Inspect the disc surface for damage and cracks. Clean the disc thoroughly, and remove all rust.
4. Use wheel nuts and suitable flat washers (A) to hold the disc securely against the hub, then mount a dial indicator as shown, and measure the runout at 10 mm (0.4 in.) from the outer edge of the disc.

   **Brake Disc Runout:**
   **Service Limit: 0.10 mm (0.004 in.)**

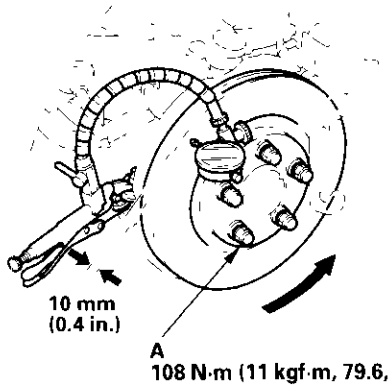


5. If the disc is beyond the service limit, refinish the brake disc.

   **Max. Refinish Limit: 23.0 mm (0.91 in.)**

   NOTE:
   - If the brake disc is beyond the service limit for refinishing, replace it (see step 7 on page 18-12).
   - A new disc should be refinished if its runout is greater than 0.10 mm (0.004 in.).

### Thickness and Parallelism

1. Loosen the front wheel nuts slightly, then raise the vehicle, and support it with safety stands in the proper locations (see page 1-13). Remove the front wheels.
2. Remove the brake pads (see page 19-12).
3. Using a micrometer, measure disc thickness at eight points, approximately 45° apart and 10 mm (0.4 in.) in from the outer edge of the disc. Replace the brake disc if the smallest measurement is less than the max. refinishing limit.

   **Brake Disc Thickness:**
   **Standard: 24.9—25.1 mm (0.98—0.99 in.)**
   **Max. Refinishing Limit: 23.0 mm (0.91 in.)**
   **Brake Disc Parallelism: 0.015 mm (0.0006 in.) max.**

   NOTE: This is the maximum allowable difference between the thickness measurements.

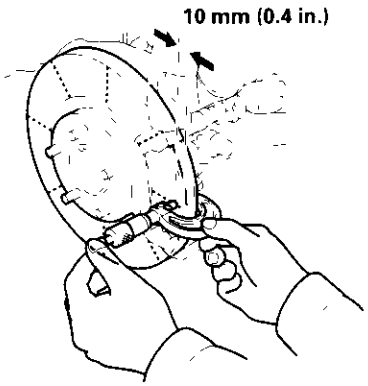


4. If the disc is beyond the service limit for parallelism, refinish the brake disc.

   NOTE: If the brake disc is beyond the service limit for refinishing, replace it (see step 1 on page 18-12).

## Front Brake Caliper Overhaul

**⚠CAUTION**

Frequent inhalation of brake pad dust, regardless of material composition, could be hazardous to your health.
- Avoid breathing dust particles.
- Never use an air hose or brush to clean brake assemblies. Use an OSHA-approved vacuum cleaner.

Remove, disassemble, inspect, reassemble, and install the caliper, and note these items:

- Do not spill brake fluid on the vehicle; it may damage the paint; if brake fluid gets on the paint, wash it off immediately with water.
- To prevent dripping, cover disconnected hose joints with rags or shop towels.
- Clean all parts in brake fluid and air dry; blow out all passages with compressed air.
- Before reassembling, check that all parts are free of dirt and other foreign particles.
- Replace parts with new ones as specified in the illustration.
- Make sure no dirt or other foreign matter gets in the brake fluid.
- Make sure no grease or oil gets on the brake discs or pads.
- When reusing pads, always reinstall them in their original positions to prevent loss of braking efficiency.
- Do not reuse drained brake fluid.
- Always use Honda DOT 3 Brake Fluid.
- Coat the piston, piston seal groove, and caliper bore with clean brake fluid.
- Replace all rubber parts with new ones.
- After installing the caliper, check the brake hose and line for leaks, interference, and twisting.

GREASE : Honda caliper grease (P/N 08C30-B0234M)

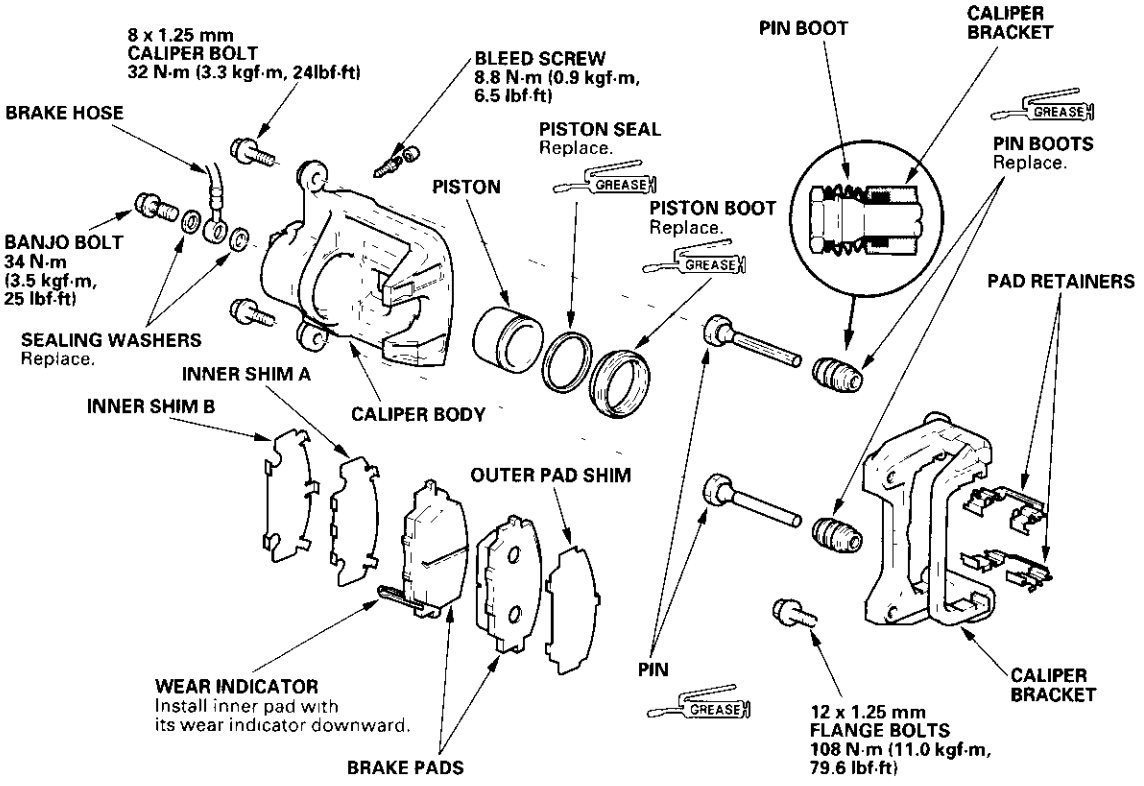

## Master Cylinder/Brake Booster Replacement

NOTE:
Do not spill brake fluid on the vehicle; it may damage the paint; If brake fluid does contact the paint, wash it off immediately with water.

1. Disconnect the brake fluid level switch connectors.
2. Remove the brake fluid from the master cylinder reservoir with a syringe.
3. Disconnect the brake lines from the master cylinder. To prevent spills, cover the line joints with rags or shop towels.
4. Remove the master cylinder mounting nuts and washers.
5. Remove the master cylinder from the brake booster.
6. Disconnect the vacuum hose from the brake booster.
7. Remove the lock pin and clevis pin.
8. Remove the four brake booster mounting nuts.
9. Pull the brake booster forward, and remove the brake booster from the engine compartment. Be careful not to bend or damage the brake lines when removing it.
10. Install the brake booster and master cylinder in the reverse order of removal, and note these items.

- Replace all rubber parts and the gasket with new ones whenever removed.
- Coat the lip of the new rod seal with recommended seal grease in the master cylinder set.
- Install the rod seal onto the brake booster with its grooved side toward the master cylinder.
- Adjust the pushrod length before installing the booster (see step 5 on page 19-18).
- Fill the master cylinder reservoir, and bleed the brake system (see page 19-8).
- After installation, check the brake pedal height and brake pedal free play (see page 19-6) and adjust if necessary.

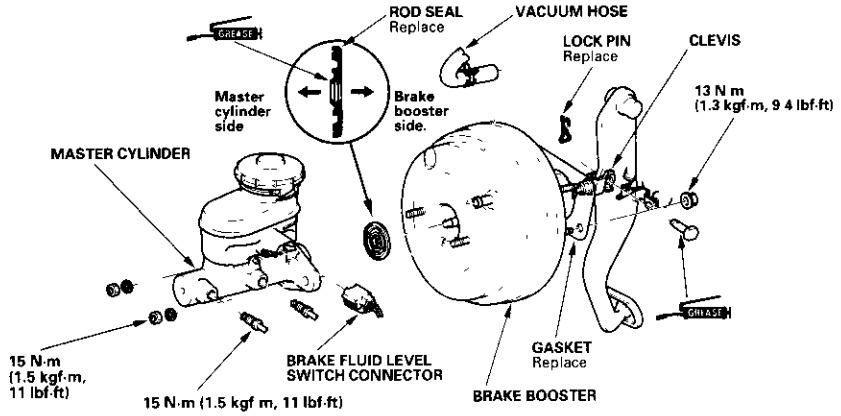

## Master Cylinder Inspection

NOTE:
- Before reassembling, check that all parts are free of dust and other foreign particles.
- Do not try to disassemble the master cylinder assembly. Replace the master cylinder assembly with a new part if necessary.
- Do not allow dirt or foreign matter to contaminate the brake fluid.

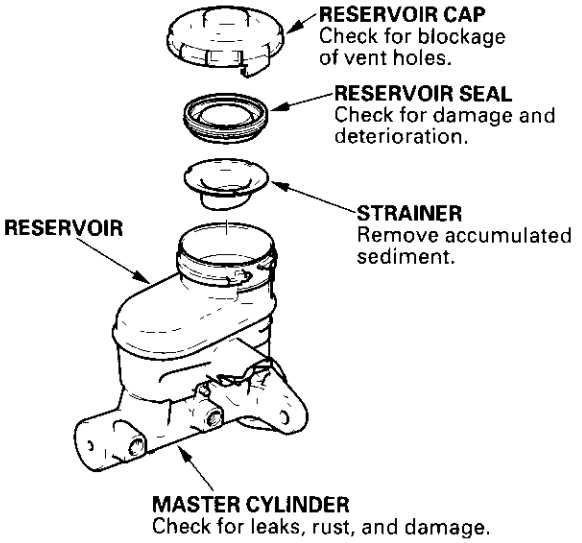


## Master Cylinder Pushrod Clearance Adjustment

**Special Tools Required**
Pushrod adjustment gauge 07JAG-SD40100

NOTE: Master cylinder pushrod-to-piston clearance must be checked and adjustments made, if necessary, before installing the master cylinder.

1. Set the special tool (A) on the master cylinder body (B), push in the center shaft (C) until the top of it contacts the end of the secondary piston (D) by turning the adjusting nut (E).

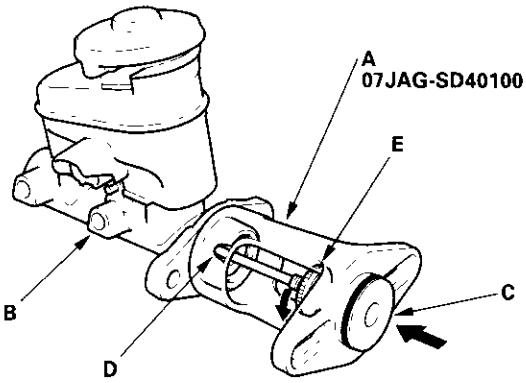


2. Without disturbing the center shaft's position, install the special tool (A) onto the booster.

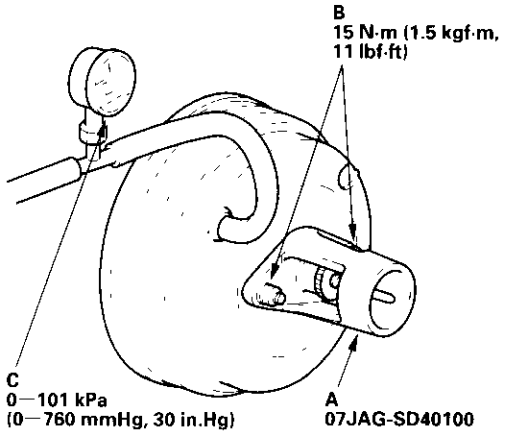


3. Install the master cylinder nuts (B), and tighten to the specified torque.

4. Connect the booster in-line with a vacuum gauge (C) 0—101 kPa (0—760 mmHg, 30 in.Hg) to the booster's engine vacuum supply, and maintain an engine speed that will deliver 66 kPa (500 mmHg, 20 in.Hg) vacuum.

(cont'd)

## Master Cylinder Pushrod Clearance Adjustment (cont'd)

5. With a feeler gauge (A), measure the clearance between the gauge body and the adjusting nut (B) as shown.
   If the clearance between the gauge body and the adjusting nut is 0.4 mm (0.02 in.), the pushrod-to-piston clearance is 0 mm. However, if the clearance between the gauge body and the adjusting nut is 0 mm, the pushrod-to-piston clearance is 0.4 mm (0.02 in.) or more. Therefore, it must be adjusted and rechecked.

   **Clearance: 0 – 0.4 mm (0 – 0.02 in.)**

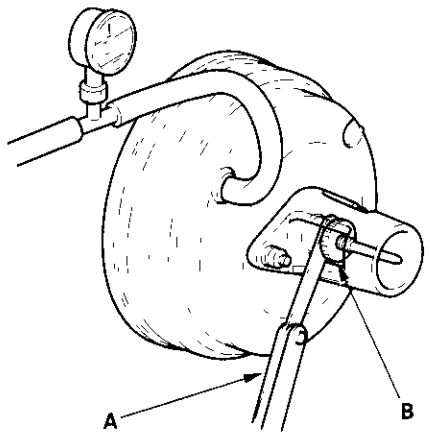


6. If the clearance is incorrect, loosen the star locknut (A), and turn the adjuster (B) in or out to adjust.
   - Adjust the clearance while the specified vacuum is applied to the booster.
   - Hold the clevis (C) while adjusting.

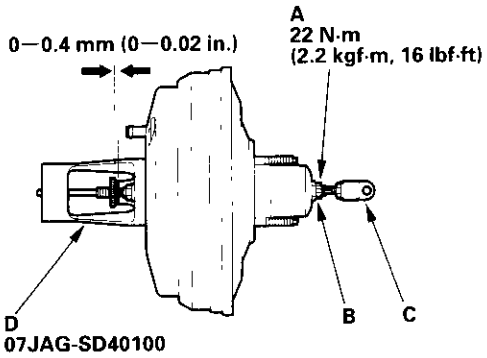


7. Tighten the star locknut securely.

8. Remove the special tool (D).

9. Check the pushrod length (A) as shown if the booster is removed. If the length is incorrect, loosen the pushrod locknut (B), and turn the clevis (C) in or out to adjust.

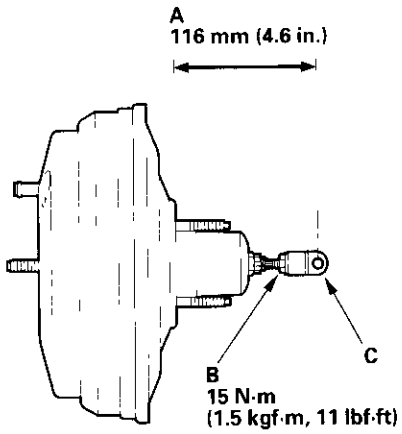


10. Install the master cylinder (see page 19-16).

## Brake Booster Test

### Functional Test

1. With the engine stopped, press the brake pedal several times to deplete the vacuum reservoir, then press the pedal hard and hold it for 15 seconds. If the pedal sinks, either the master cylinder is bypassing internally, or the brake system (master cylinder, lines, modulator, proportioning valve, or caliper) is leaking.

2. Start the engine with the brake pedal pressed. If the pedal sinks slightly, the vacuum booster is operating normally. If the pedal height does not vary, the booster or check valve is faulty.

3. With the engine running, press the brake pedal lightly. If the brake pedal sinks more than 10 mm (3/8 in.) in 3 minutes, the master cylinder is faulty.

### Leak Test

1. Press the brake pedal with the engine running, then stop the engine. If the pedal height does not vary while pressed for 30 seconds, the vacuum booster is OK. If the pedal rises, the booster is faulty.

2. Turn the ignition switch to lock (0) and wait 30 seconds, press the brake pedal several times using normal pressure. When the pedal is first pressed, it should be low. On consecutive applications, the pedal height should gradually rise. If the pedal position does not vary, check the booster check valve.

3. Disconnect the brake booster vacuum hose (check valve built-in) (A) at the booster (B).

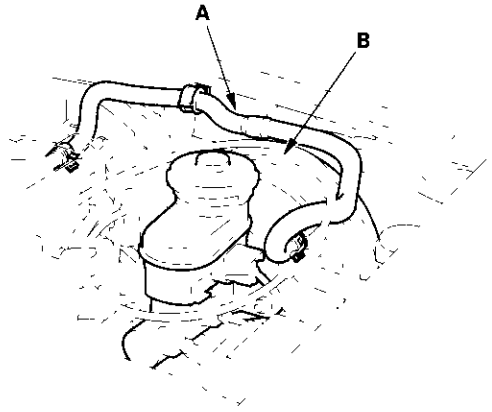


4. Start the engine, and let it idle. There should be vacuum available. If no vacuum is available, the check valve is not working properly. Replace the brake booster vacuum hose and check valve, and retest.

5. Start the engine, and then pinch the brake booster vacuum hose between the check valve and the booster.

6. Turn the ignition switch to lock (0), and wait 30 seconds. Press the brake pedal several times using normal pressure. When the pedal is first pressed, it should be low. On consecutive applications, the pedal height should gradually rise.

   - If the pedal position does not vary, replace the brake booster (see page 19-16).
   - If the pedal position varies, replace the brake booster vacuum hose/check valve assembly.

## Rear Brake Pads Inspection/Replacement

**⚠CAUTION**

**Frequent inhalation of brake pad dust, regardless of material composition, could be hazardous to your health.**
- Avoid breathing dust particles.
- Never use an air hose or brush to clean brake assemblies. Use an OSHA-approved vacuum cleaner.

1. Raise the rear of the vehicle, and support it with safety stands in the proper locations (see page 1-13). Remove the rear wheel.

2. Release the parking brake.

3. Hold the caliper pin (A) with a wrench, being careful not to damage the pin boot. Remove the two caliper bolts (B) with another wrench and caliper (C) from the bracket.
   Thoroughly clean the outside of the caliper to prevent dust and dirt from entering inside.
   Support the caliper with a piece of wire so it does not hang from the brake hose.

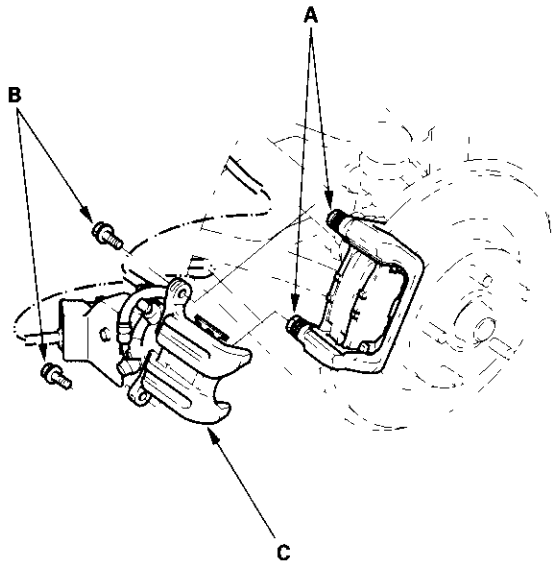


4. Remove the pad shims (A) and brake pads (B).

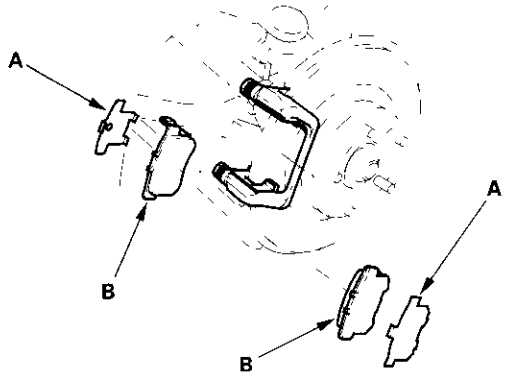


5. Using vernier calipers, measure the thickness of each brake pad lining. The measurement does not include the pad backing plate (A) thickness.

**Brake Pad Thickness:**
**Standard: 8.9 – 9.1 mm (0.35 – 0.36 in.)**
**Service Limit: 1.6 mm (0.06 in.)**

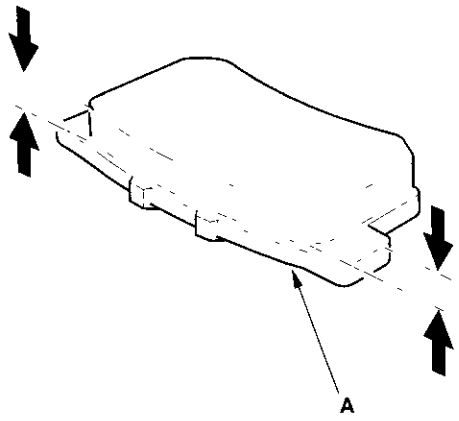

6. Remove the pad retainers.

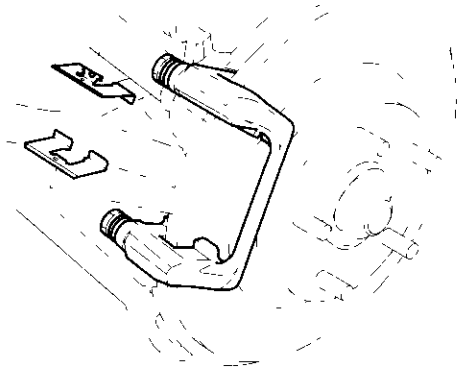

7. Clean the caliper thoroughly; remove any rust, and check for grooves and cracks.

8. Check the brake disc for damage and cracks.

9. Install the pad retainers.

10. Apply Molykote M77 grease or Daikalub 528D grease to the pad side of the shims (A). Wipe excess grease off the shim.
Contaminated brake discs or pads reduce stopping ability. Keep grease off of the discs and pads.

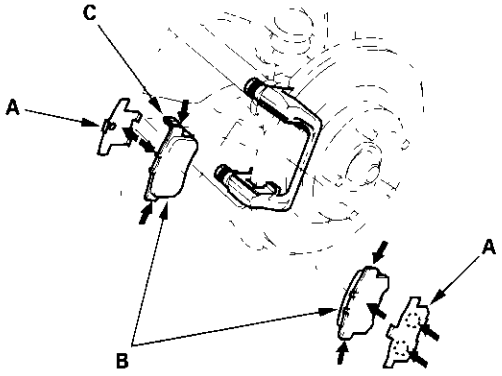


11. Install the brake pads (B) and pad shims on the caliper bracket. Install the inner pad with its wear indicator (C) facing up ward.

    If you are reusing the pads, always reinstall the brake pads in their original positions to prevent a momentary loss of braking efficiency.

12. Rotate the caliper piston (A) clockwise into the cylinder, then align the cutout (B) in the piston with the tab (C) on the inner pad by turning the piston back. Lubricate the boot with rubber grease to avoid twisting the piston boot. If the piston boot is twisted, back it out so it is positioned properly.

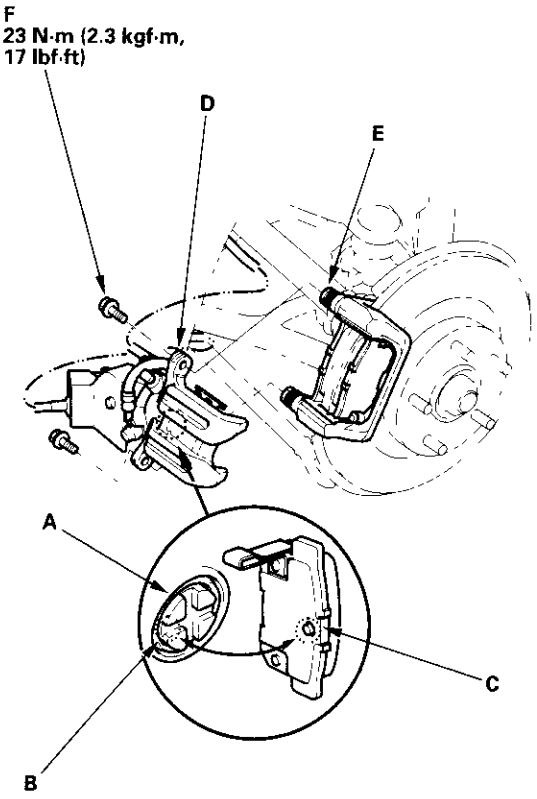


13. Install the brake caliper (D).

14. Hold the caliper pin (E) with a wrench, being careful not to damage the pin boot. Install the caliper bolts (F) with another wrench, and torque the caliper bolts to the proper specification.

15. After installation, check for leaks at hose and line joints and connections, and retighten if necessary.

16. Press the brake pedal several times to make sure the brakes work, then road-test.

    NOTE: Engagement of the brake may require a greater pedal stroke immediately after the brake pads have been replaced as a set. Several applications of the brake pedal will restore the normal pedal stroke.

## Rear Brake Disc Inspection

### Runout

1. Raise the rear of the vehicle, and support it with safety stands in the proper locations (see page 1-13).
2. Remove the brake pads (see page 19-20).
3. Inspect the disc surface for damage and cracks. Clean the disc thoroughly, and remove all rust.
4. Use wheel nuts and suitable flat washers (A) to hold the disc securely against the hub, then mount a dial indicator (B) as shown, and measure the runout at 10 mm (0.4 in.) from the outer edge of the disc.

   **Brake Disc Runout:**
   **Service Limit: 0.10 mm (0.004 in.)**

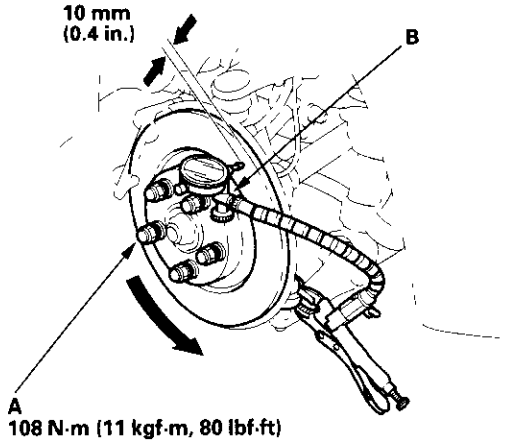


5. If the disc is beyond the service limit, refinish the brake disc. Do not use an engine-driven on-car brake lathe. Use only a motor-driven on-car brake lathe.

   **Max. Refinishing Limit: 10.0 mm (0.39 in.)**

   NOTE: A new disc should be refinished if its runout is greater than 0.10 mm (0.004 in.).

### Thickness and Parallelism

1. Loosen the rear wheel nuts slightly, then raise the vehicle, and support it with safety stands in the proper locations (see page 1-13). Remove the rear wheels.
2. Remove the brake pads (see page 19-20).
3. Using a micrometer (A), measure disc thickness at eight points, approximately 45° apart and 10 mm (0.4 in.) in from the outer edge of the disc. Replace the brake disc if the smallest measurement is less than the max. refinishing limit.

   **Brake Disc Thickness:**
   **Standard: 11.9 – 12.1 mm (0.469 – 0.476 in.)**
   **Max. Refinishing Limit: 10.0 mm (0.39 in.)**
   **Brake Disc Parallelism: 0.015 mm (0.0006 in.) max.**

   This is the maximum allowable difference between the thickness measurements.

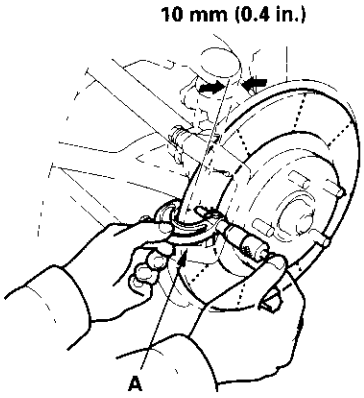


4. If the disc is beyond the service limit for parallelism, refinish the brake disc. Do not use an engine-driven on-car brake lathe. Use only a motor-driven on-car brake lathe.

   NOTE: If the brake disc is beyond the service limit for refinishing, replace it (see step 7 on page 18-30).

## Rear Brake Caliper Removal/Installation

**⚠CAUTION**

**Frequent inhalation of brake pad dust, regardless of material composition, could be hazardous to your health.**

- Avoid breathing dust particles.
- Never use an air hose or brush to clean brake assemblies. Use an OSHA-approved vacuum cleaner.
- Thoroughly clean the outside of the caliper to prevent dust and dirt from entering inside.

1. Block the front wheels, loosen the rear wheel nuts slightly, raise the rear of the vehicle, and support it with safety stands in the proper locations (see page 1-13).
2. Remove the rear wheels.
3. Release the parking brake.
4. Remove the caliper shield (A).

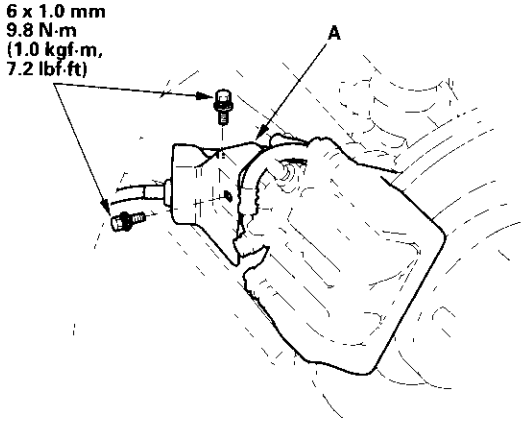


5. Remove the brake hose mounting bracket (A) from the rear caliper body.

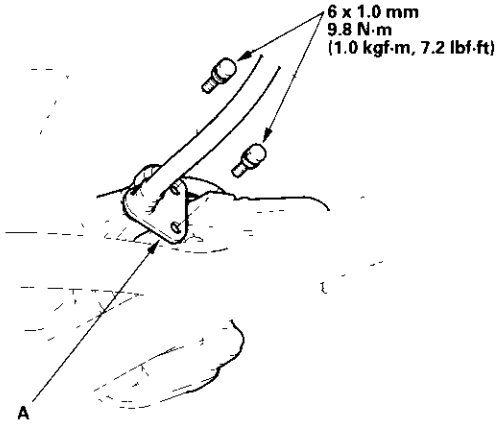


6. Remove the cable clip (A) from the parking brake cable (B).

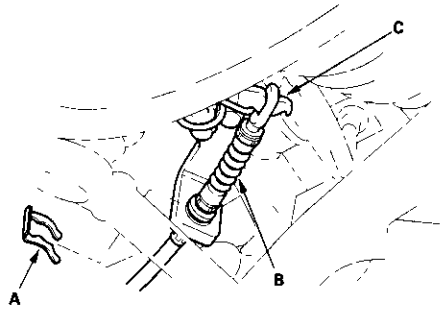


7. Disconnect the parking brake cable end from the parking brake arm (C).
8. Remove the banjo bolt (A), and disconnect the brake hose (B). Remove the two sealing washers (C), and replace them. Do not spill brake fluid on the vehicle; it may damage the paint; if brake fluid gets on the paint, wash it off immediately with water.

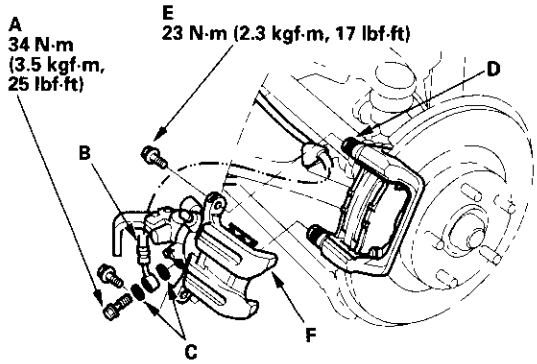


9. Hold the caliper pin (D) with a wrench, being careful not to damage the pin boot. Remove the two caliper bolts (E) with another wrench, and remove the caliper (F) from the bracket.
10. Install the rear brake caliper in the reverse order of removal, and note these items:
    - When installing the caliper, align the cutout in the piston with the tab on the inner pad (see step 6 on page 19-21).
    - Check the brake hose and caliper fitting for leaks, and tighten the banjo bolt if necessary.
    - Check the brake hoses for interference and twisting.
    - Contaminated brake discs or pads reduce stopping ability. Keep grease off of the discs and pads.

## Rear Brake Caliper Overhaul

**⚠CAUTION**

Frequent inhalation of brake pad dust, regardless of material composition, could be hazardous to your health.
- Avoid breathing dust particles.
- Never use an air hose or brush to clean brake assemblies. Use an OSHA-approved vacuum cleaner.

Disassemble, inspect, and reassemble the caliper, and note these items:

- Clean all parts in brake fluid and air dry; blow out all passages with compressed air.
- Before reassembling, check that all parts are free of dirt and other foreign particles.
- Replace parts with new ones as specified in the illustration.
- Make sure no dirt or other foreign matter gets into the brake fluid.
- Make sure no grease or oil gets on the brake discs or pads.
- Do not reuse drained brake fluid.
- Always use Honda DOT 3 Brake Fluid.
- Coat the piston, piston seal groove, and caliper bore with clean brake fluid.
- Replace all rubber parts with new ones.

• GREASE :Honda caliper grease (P/N 08C30-B0234M)

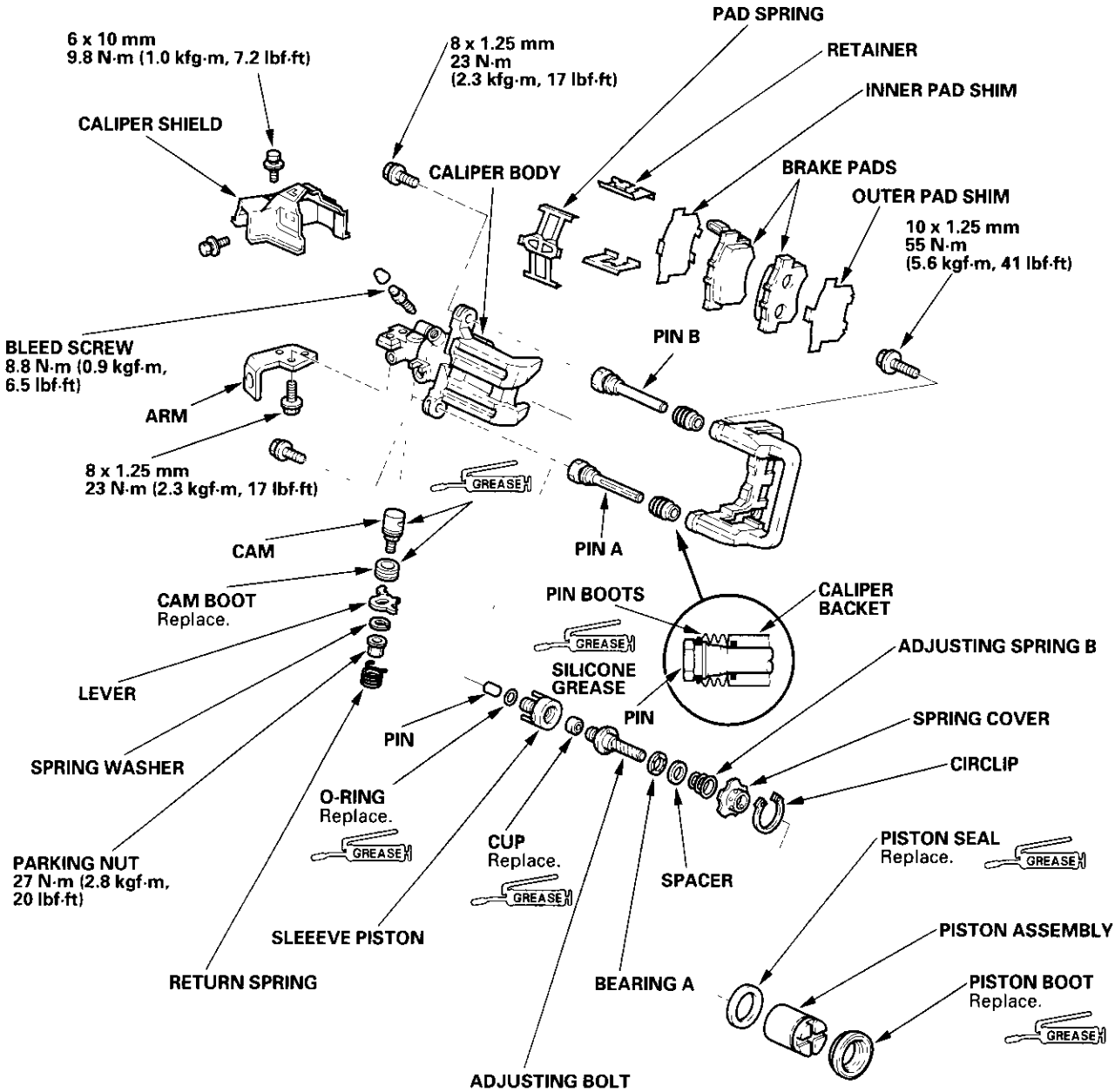

## Brake Hoses and Lines Inspection

1. Inspect the brake hoses for damage, deterioration, leaks, interference, and twisting.
2. Check the brake lines for damage, rusting, and leakage. Also check for bent brake lines.
3. Check for leaks at hose and line joints or connections, and retighten if necessary.
4. Check the master cylinder and ABS modulator unit for damage and leakage.

NOTE: Replace the brake hose clip whenever the brake hose is serviced.

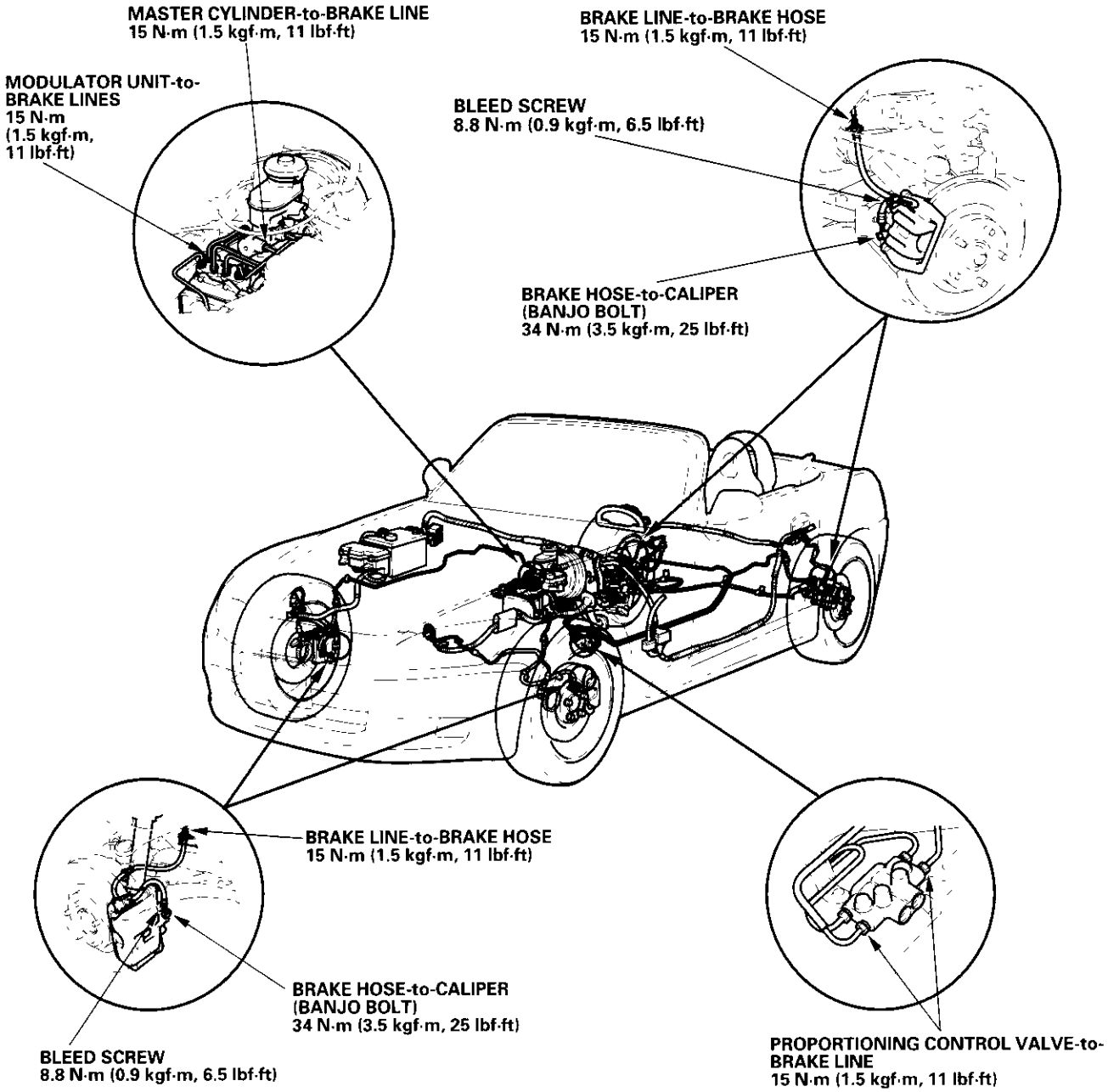

## Brake Hose Replacement

NOTE:
- Before reassembling, check that all parts are free of dust and other foreign particles.
- Replace parts with new ones whenever specified to do so.
- Do not spill brake fluid on the vehicle; it may damage the paint; if brake fluid gets on the paint, wash it off immediately with water.

1. Replace the brake hose (A) if the hose is twisted, cracked, or if it leaks.

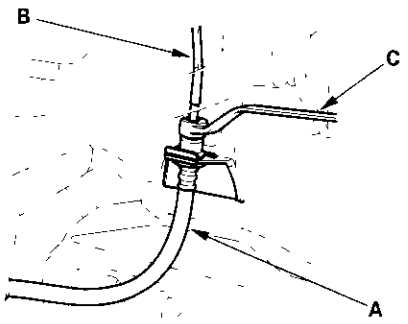


2. Disconnect the brake hose from the brake line (B) using a 10 mm flare-nut wrench (C).

3. Remove and discard the brake hose clip (A) from the brake hose (B).

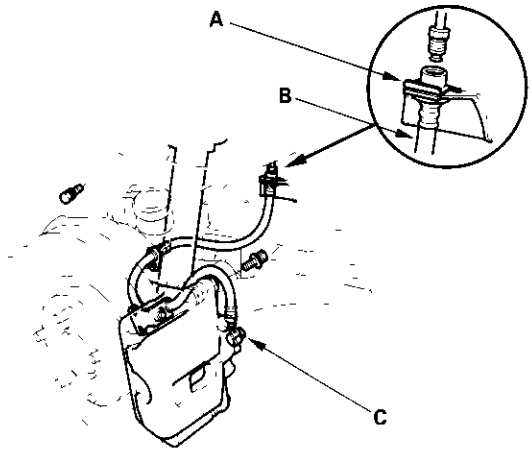


4. Remove the banjo bolt (C), and disconnect the brake hose from the caliper.

5. Remove the brake hose from the knuckle and damper bracket.

6. Install the brake hose (A) on the knuckle and damper bracket with two 6 mm flange bolts (B) and the 8 mm flange bolt (C) first, then connect the brake hose to the caliper with the banjo bolt (D) and new sealing washers (E).

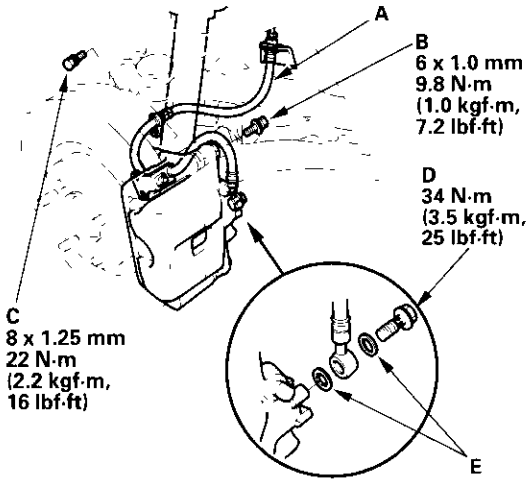


7. Install the brake hose (A) on the upper brake hose bracket (B) with a new brake hose clip (C).

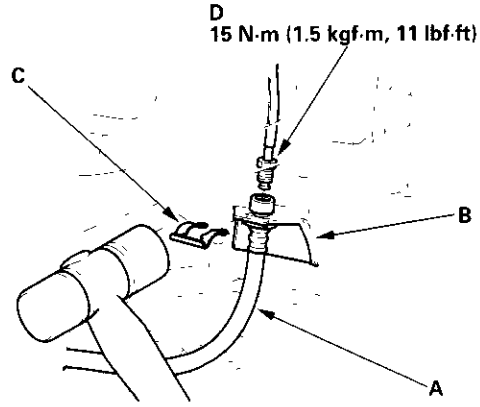


8. Connect the brake line (D) to the brake hose.

9. After installing the brake hose, bleed the brake system (see page 19-8).

10. Do the following checks:

    - Check the brake hose and line joint for leaks, and tighten if necessary (see page 19-26).
    - Check the brake hoses for interference and twisting.

## Parking Brake Cable Replacement

### Exploded View

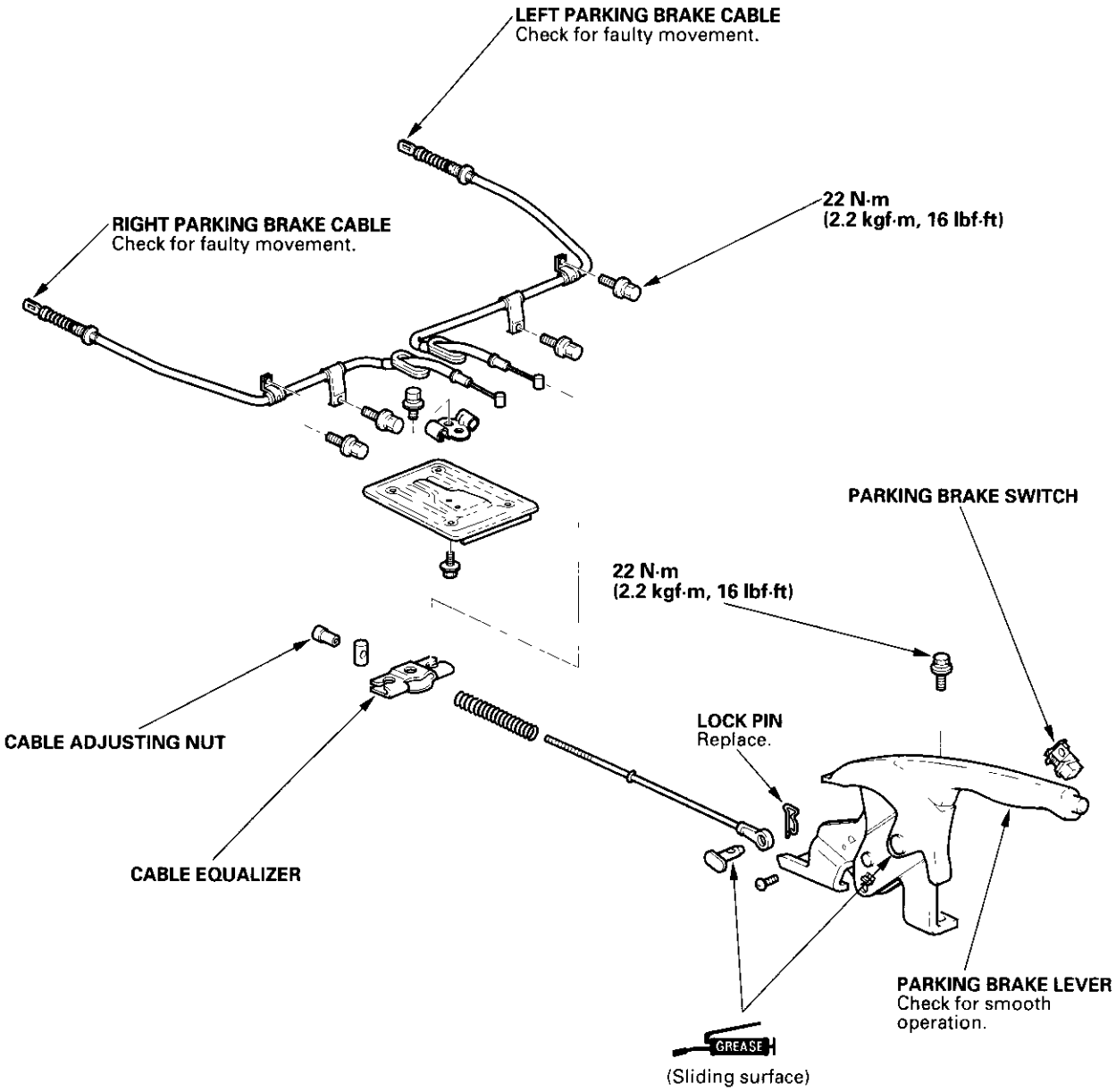

NOTE:
- The parking brake cables must not be bent or distorted. This will lead to stiff operation and premature failure.
- Refer to the Exploded View as needed during this procedure.

1. Remove the caliper shield.

2. Release the parking brake lever fully, and remove the brake hose clip (A) from the parking brake cable (B).

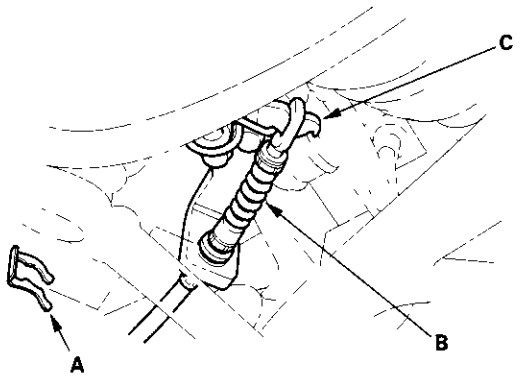


3. Disconnect the parking brake cable end from the parking brake arm (C).

# Brakes


**Conventional Brake Components ..... 19-1**

**ABS (Anti-lock Brake System) Components**

Component Location Index ..... 19-32
General Troubleshooting Information ..... 19-33
DTC Troubleshooting Index ..... 19-37
Symptom Troubleshooting Index ..... 19-38
System Description ..... 19-39
Circuit Diagram ..... 19-46
DTC Troubleshooting ..... 19-48
ABS Indicator Circuit Troubleshooting ..... 19-56
ABS Modulator-Control Unit Removal and Installation ..... 19-59
Wheel Sensor Inspection ..... 19-60
Wheel Sensor Replacement ..... 19-60




# ABS Components

## Component Location Index

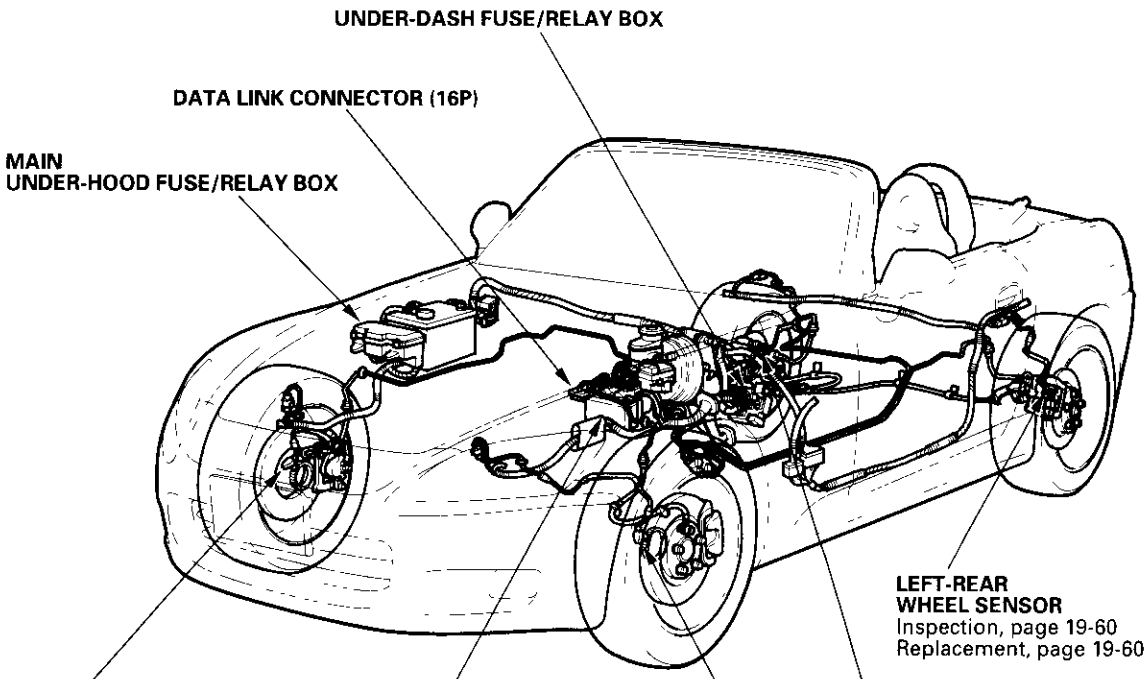

# General Troubleshooting Information

## ABS Indicator

- If the system is OK, the ABS indicator goes off 2 seconds after turning the ignition switch ON (II) without starting the engine, and then comes on again and goes off 2 seconds later after starting the engine. This occurs because the ABS control unit is turned on by the IG2 power source.
- The ABS indicator comes on when the ABS control unit detects a problem in the system. However, even though the system is operating properly, the indicator will come on under these conditions:
  - Only the drive wheels rotate
  - One drive wheel is stuck
  - The vehicle goes into a spin
  - The ABS continues to operate for a long time.
  - The vehicle is subjected to an electrical signal disturbance

To determine the actual cause of the problem, question the customer about the problem, taking the above-listed conditions into consideration.

- When a problem is detected and the ABS indicator comes on, there are cases when the indicator stays on until the ignition switch is turned OFF, and cases when the indicator goes off automatically when the system returns to normal.
  - DTC 61 or 62: The ABS indicator goes off automatically when the system returns to normal.
  - DTC 11, 13, 15, 17, 31, 32, 33, 34, 35, 36, 37, 38, 54, 71, or 81: The ABS indicator stays on until the ignition switch is turned OFF whether or not the system returns to normal.
  - DTC 12, 14, 16, 18, 21, 22, 23, 24, 41, 42, 43, 44, 51, 52, or 53: The ABS indicator goes off when the vehicle is driven again and the system is OK after the ignition switch is turned from OFF to ON (II).

## Diagnostic Trouble Code (DTC)

- The memory can hold any number of DTCs. However, when the same DTC is detected more than once, the more recent DTC is written over the earlier one. Therefore, when the same problem is detected repeatedly, it is memorized as a single DTC.
- The DTCs are indicated in the order they occurred, beginning with the most recent.
- The DTCs are memorized in the EEPROM (non-volatile memory). Therefore, the memorized DTCs are not cleared when the battery is disconnected, the ignition switch is turned off, or the system returns to normal. Do the specified procedures to clear the DTCs.

## Self-diagnosis

- Self-diagnosis can be classified into two categories:
  - Initial diagnosis:
    Done right after the engine starts and until the ABS indicator goes off
  - Regular diagnosis:
    Done right after the initial diagnosis until the ignition switch is turned OFF
- When a problem is detected by self-diagnosis, the system does the following:
  - Turns the ABS indicator on
  - Memorizes the DTC
  - Stops ABS control

## Kickback

The pump motor operates when the ABS is functioning, and the fluid in the reservoir is forced out to the master cylinder, causing kickback at the brake pedal.

## Pump Motor

- The pump motor operates when the ABS is functioning.
- The ABS control unit checks the pump motor operation when the vehicle is started the first time after the ignition switch is turned ON (II). You may hear the motor operate at this time, but it is normal.

(cont'd)

## General Troubleshooting Information (cont'd)

### How to Troubleshoot ABS DTCs

The troubleshooting flowchart procedures assume that the cause of the problem is still present and the ABS indicator is still on. Following the flowchart when the ABS indicator does not come on can result in incorrect diagnosis.
The connector illustrations show the female terminal connectors with a single outline and the male terminal connectors with a double outline.

1. Question the customer about the conditions when the problem occured, and try to reproduce the same conditions for troubleshooting. Find out when the ABS indicator came on, such as during ABS control, after ABS control, when the vehicle was at a certain speed, etc.

2. When the ABS indicator does not come on during the test-drive, but troubleshooting is done based on the DTC, check for loose connectors, poor terminal contact, etc., before you start troubleshooting.

3. After troubleshooting, clear the DTC, and test-drive the vehicle. Make sure the ABS indicator does not come on.

### How to Retrieve ABS DTCs

**Honda PGM Tester Method:**

1. With the ignition switch OFF, connect the Honda PGM Tester (A) to the 16P data link connector (DLC) (B) under the passenger's side of the dashboard.

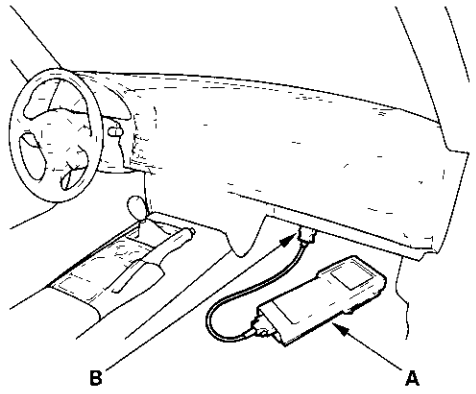


2. Turn the ignition switch ON (II), and follow the prompts on the PGM Tester to display the DTC(s) on the screen. After determining the DTC, refer to the DTC Troubleshooting Index.

   NOTE: See the Honda PGM Tester user's manual for specific instructions.

**Service Check Signal (SCS) Circuit Method:**

1. With the ignition switch OFF, connect the Honda PGM Tester (A) to the 16P data link connector (DLC) (B) under the passenger's side of the dashboard.

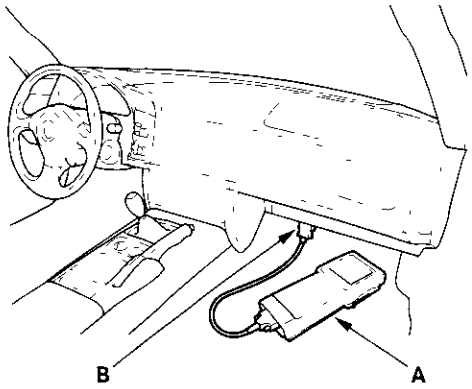


2. Short the SCS circuit to body ground using the Honda PGM Tester.

3. Turn the ignition switch ON (II) without the brake pedal pressed.

   NOTE: If the brake pedal is pressed when turning the ignition switch ON (II), the system shifts to the DTC clearing mode.

4. The blinking frequency indicates the DTC. DTCs are indicated by a series of long and short blinks. One long blink equals 10 short blinks. Add the long and short blinks together to determine the DTC. After determining the DTC, refer to the DTC Troubleshooting Index.

   **NOTE:**
   - If the DTC is not memorized, the ABS indicator will go off for 3.6 seconds, and then come back on.
   - If the ABS indicator stays on, troubleshoot for "ABS indicator does not go off" (see step 1 on page 19-57).

   **The system will not indicate the DTC unless these conditions are met:**
   - The brake pedal is not pressed.
   - The ignition switch is turned ON (II).
   - The SCS circuit is shorted to body ground before the ignition switch is turned ON (II).

**Example of DTC 15**

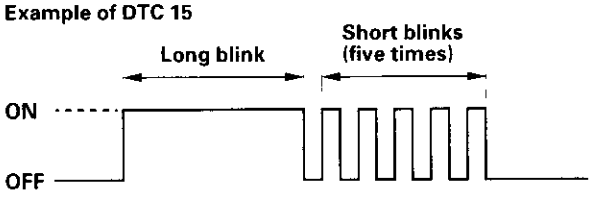


**Example of DTC 22**

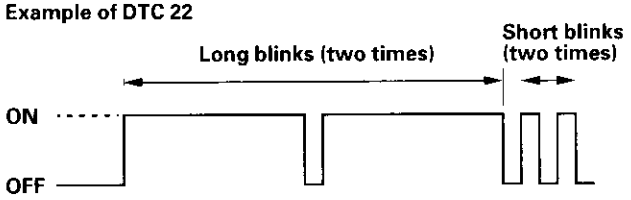


5. Turn the ignition switch OFF.

6. Disconnect the Honda PGM Tester from the DLC.

## How to Clear ABS DTCs

**Honda PGM Tester Method:**

1. With the ignition switch OFF, connect the Honda PGM Tester (A) to the 16P data link connector (DLC) (B) under the passenger's side of the dashboard.

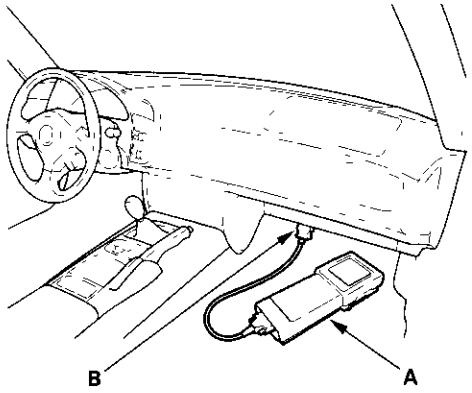


2. Turn the ignition switch ON (II), and clear the DTC(s) by following the screen prompts on the PGM Tester.

   NOTE: See the Honda PGM Tester user's manual for specific instructions.

**Service Check Signal (SCS) Circuit Method:**

1. With the ignition switch OFF, connect the Honda PGM Tester (A) to the 16P data link connector (DLC) (B) under the passenger's side of the dashboard.

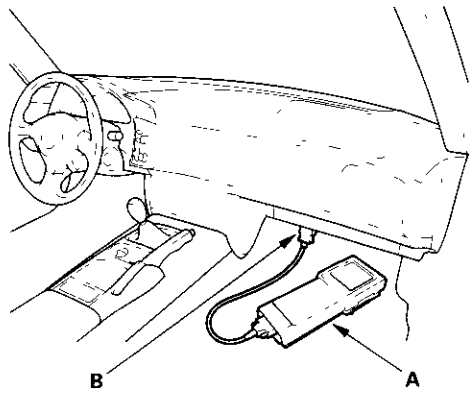


2. Short the SCS circuit to body ground using the Honda PGM Tester.

3. Press the brake pedal.

(cont'd)

## General Troubleshooting Information (cont'd)

4. Turn the ignition switch ON (II) while continuing to press the brake pedal.
5. After the ABS indicator goes off, release the brake pedal.
6. After the ABS indicator comes on, press the brake pedal again.
7. After the ABS indicator goes off, release the brake pedal.

   You cannot clear the DTC unless these conditions are met:
   - The vehicle speed is 6 mph (10 km/h) or less.
   - The SCS circuit is shorted to body ground before the ignition switch is turned ON (II).
   - The brake pedal is pressed before the ignition switch is turned ON (II).
8. After a few seconds, the ABS indicator blinks twice and the DTC is cleared. If the indicator does not blink twice, repeat steps 1 thru 7. If the ABS indicator stays on after it blinks twice, check the DTC, because a problem was detected during initial diagnosis before shifting to DTC clearing mode.
9. Turn the ignition switch OFF.
10. Disconnect the Honda PGM Tester from the DLC.

## DTC Troubleshooting Index

| DTC | Detection Item | Note |
|---|---|---|
| DTC:11 | Right-front wheel sensor (open/short to body ground/short to power) | (see page 19-48) |
| DTC:12 | Right-front wheel sensor (electrical noise/intermittent interruption) | (see page 19-49) |
| DTC:13 | Left-front wheel sensor (open/short to body ground/short to power) | (see page 19-48) |
| DTC:14 | Left-front wheel sensor (electrical noise/intermittent interruption) | (see page 19-49) |
| DTC:15 | Right-rear wheel sensor (open/short to body ground/short to power) | (see page 19-48) |
| DTC:16 | Right-rear wheel sensor (electrical noise/intermittent interruption) | (see page 19-49) |
| DTC:17 | Left-rear wheel sensor (open/short to body ground/short to power) | (see page 19-48) |
| DTC:18 | Left-rear wheel sensor (electrical noise/intermittent interruption) | (see page 19-49) |
| DTC:21 | Right-front pulser | (see page 19-51) |
| DTC:22 | Left-front pulser | (see page 19-51) |
| DTC:23 | Right-rear pulser | (see page 19-51) |
| DTC:24 | Left-rear pulser | (see page 19-51) |
| DTC:31 | Solenoid | (see page 19-51) |
| DTC:32 | Solenoid | (see page 19-51) |
| DTC:33 | Solenoid | (see page 19-51) |
| DTC:34 | Solenoid | (see page 19-51) |
| DTC:35 | Solenoid | (see page 19-51) |
| DTC:36 | Solenoid | (see page 19-51) |
| DTC:37 | Solenoid | (see page 19-51) |
| DTC:38 | Solenoid | (see page 19-51) |
| DTC:41 | Right-front wheel lock | (see page 19-52) |
| DTC:42 | Left-front wheel lock | (see page 19-52) |
| DTC:43 | Right-rear wheel lock | (see page 19-52) |
| DTC:44 | Left-rear wheel lock | (see page 19-52) |
| DTC:51 | Motor lock | (see page 19-52) |
| DTC:52 | Motor stuck OFF | (see page 19-53) |
| DTC:53 | Motor stuck ON | (see page 19-53) |
| DTC:54 | ABS fail-safe relay | (see page 19-54) |
| DTC:61 | Low FSR +B voltage | (see page 19-54) |
| DTC:62 | High FSR +B voltage | (see page 19-54) |
| DTC:71 | Different diameter tire | (see page 19-55) |
| DTC:81 | Central Processing Unit (CPU) diagnosis, and ROM/RAM diagnosis | (see page 19-55) |

## Symptom Troubleshooting Index

| Symptom | Diagnostic procedure | Also check for |
|---|---|---|
| ABS indicator does not come on | ABS Indicator Circuit Troubleshooting (see page 19-56) | |
| ABS indicator does not go off and no DTC is stored | ABS Indicator Circuit Troubleshooting (see step 1 on page 19-57) | |

# System Description

## ABS Control Unit Inputs and Outputs for 25P Connector

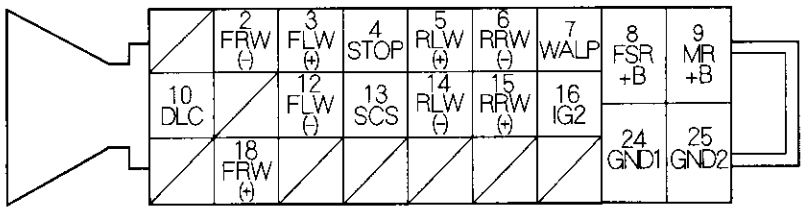


Wire side of female terminals

| Terminal number | Wire color | Terminal sign (Terminal name) | Description | Measurement (Disconnect the ABS control unit connector) | | | |
|---|---|---|---|---|---|---|---|
| | | | | Terminals | Conditions | | Voltage |
| 2 | BLU | FRW (−) (Front-right wheel negative) | Detects right-front wheel sensor signal | 2 − 18 | Wheel | Spin wheel at 1 turn/second | AC: 0.053 V or above Reference Oscilloscope 0.15 Vp-p or above |
| 3 | BLU/ ORN | FLW (+) (Front-left wheel positive) | Detects left-front wheel sensor signal | 3 − 12 | | | |
| 4 | WHT/ BLK | STOP | Detects brake switch signal | 4 − GND | Brake pedal | Pressed | Battery Voltage |
| | | | | | | Released | Below 0.3 V |
| 5 | YEL/ RED | RLW (+) (Rear-left wheel positive) | Detects left-rear wheel sensor signal | 5 − 14 | Wheel | Spin wheel at 1 turn/second | AC: 0.053 V or above Reference Oscilloscope 0.15 Vp-p or above |
| 6 | BLU/ YEL | RRW (−) (Rear-right wheel negative) | Detects right-rear wheel sensor signal | 6 − 15 | | | |
| 7 | BLU/ RED | WALP (Warning lamp) | Drives ABS indicator | 7 − GND | ABS indicator (Ignition switch ON (II)) | ON | About 6 V |
| | | | | | | OFF | Below 0.3 V*1 |
| 8 | WHT/ GRN | FSR +B (ABS fail-safe relay battery) | Power source for the ABS fail-safe relay | 8 − GND | Every time | | Battery Voltage |
| 9 | WHT/ BLU | MR +B (Motor relay battery) | Power source for the motor relay | 9 − GND | Every time | | Battery Voltage |
| 10 | LT BLU | DLC (Data link connector) | Communicates with the Honda PGM Tester | ——— | ——— | | ——— |

*1: When measured with the ABS control unit 25P connector terminal No. 7 connected to body ground with a jumper wire.

(cont'd)

## System Description (cont'd)

| Terminal number | Wire color | Terminal sign (Terminal name) | Description | Measurement (Disconnect the ABS control unit connector) | | | |
|---|---|---|---|---|---|---|---|
| | | | | Terminals | Conditions | | Voltage |
| 12 | BRN/WHT | FLW (−) (Front-left wheel negative) | Detects left-front wheel sensor signal | 12−3 | Wheel | Spin wheel at 1 turn/second | AC: 0.053 V or above Reference Oscilloscope 0.15 Vp-p or above |
| 13 | BRN | SCS (Service check signal) | Detects service check connector signal (DTC indication or DTC clearing) | ——— | ——— | | ——— |
| 14 | GRY/RED | RLW (−) (Rear-left wheel negative) | Detects left-rear wheel sensor signal | 14−5 | Wheel | Spin wheel at 1 turn/second | AC: 0.053 V or above Reference Oscilloscope 0.15 Vp-p or above |
| 15 | GRN/WHT | RRW (+) (Rear-right wheel positive) | Detects right-rear wheel sensor signal | 15−6 | | | |
| 16 | YEL/BLK | IG2 (Ignition 2) | Power source for activating the system | 16−GND | ——— | | Battery Voltage |
| 18 | GRN/BLK | FRW (+) (Front-right wheel positive) | Detects right-front wheel sensor signal | 18−2 | Wheel | Spin wheel at 1 turn/second | AC: 0.053 V or above Reference Oscilloscope 0.15 Vp-p or above |
| 24 | BLK | GND1 (Ground 1) | Ground | ——— | ——— | | ——— |
| 25 | BLK | GND2 (Ground 2) | Ground | ——— | ——— | | ——— |

## Features

When the brake pedal is pressed during driving, the wheels can lock before the vehicle comes to a stop. In such an event, the maneuverability of the vehicle is reduced if the front wheels are locked, and the stability of the vehicle is reduced if the rear wheels are locked, creating an extremely unstable condition. The ABS precisely controls the slip rate of the wheels to ensure maximum grip force from the tires, thereby ensuring the maneuverability and stability of the vehicle.
The ABS calculates the slip rate of the wheels based on the vehicle speed and the wheel speed, then it controls the brake fluid pressure to reach the target slip rate.

**Grip Force of Tire and Road Surface**

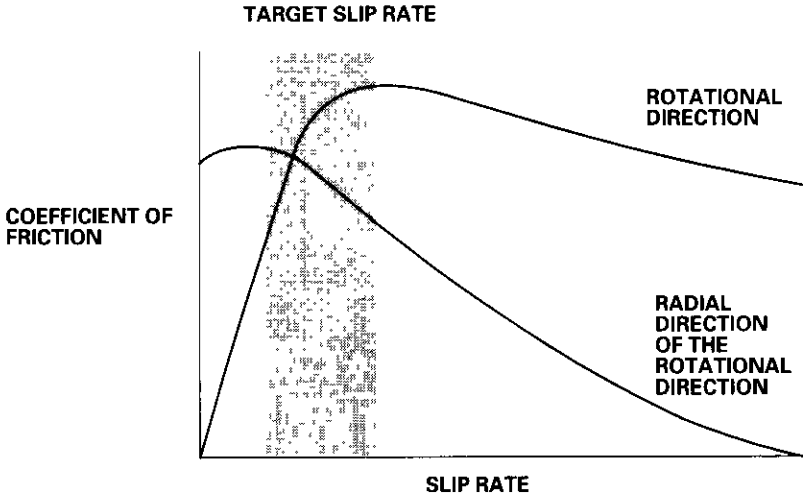


(cont'd)

## System Description (cont'd)

| COMPONENTS | | MAIN FUNCTION |
|---|---|---|
| Wheel sensor | | The wheel sensor outputs the speed signal to the ABS control unit according to the pulser's rotation speed. |
| Modulator-control unit | ABS control unit | The ABS control unit processes the signal from the wheel sensor, then outputs the ABS control signal to the modulator unit. |
| | Modulator unit | The modulator unit receives the control signal, then controls brake fluid pressure for each wheel. |
| Motor relay (inside of the ABS control unit) | | The motor relay drives the ABS pump motor. |
| ABS fail-safe relay (inside of the ABS control unit) | | The ABS fail-safe relay cuts the power to the solenoid valve when the problem is detected. |

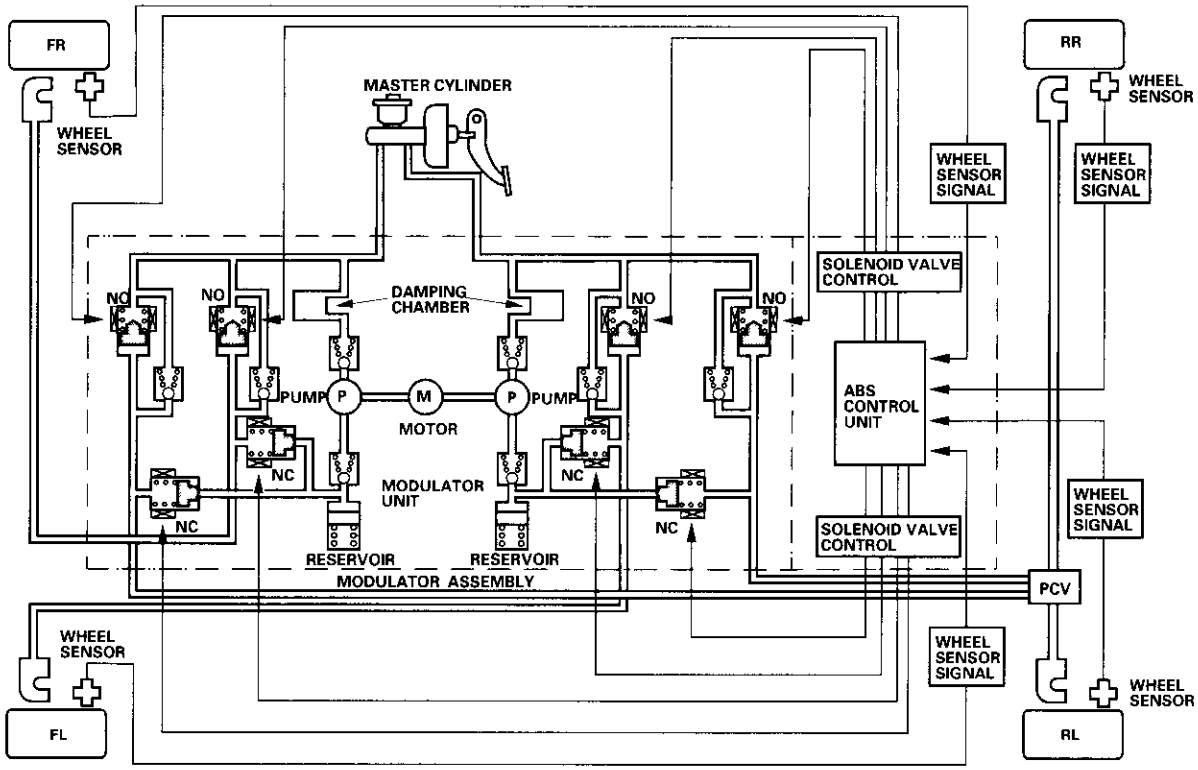

## ABS Control Unit

### Main Control

The ABS control unit detects the wheel speed based on the wheel sensor signal it received, then it calculates the vehicle speed based on the detected wheel speed. The control unit detects the vehicle speed during deceleration based on the rate of deceleration.

The ABS control unit calculates the slip rate of each wheel, and transmits the control signal to the modulator unit solenoid valve when the slip rate is high.

The pressure reduction control has three modes: pressure reducing, pressure retaining, and pressure intensifying.

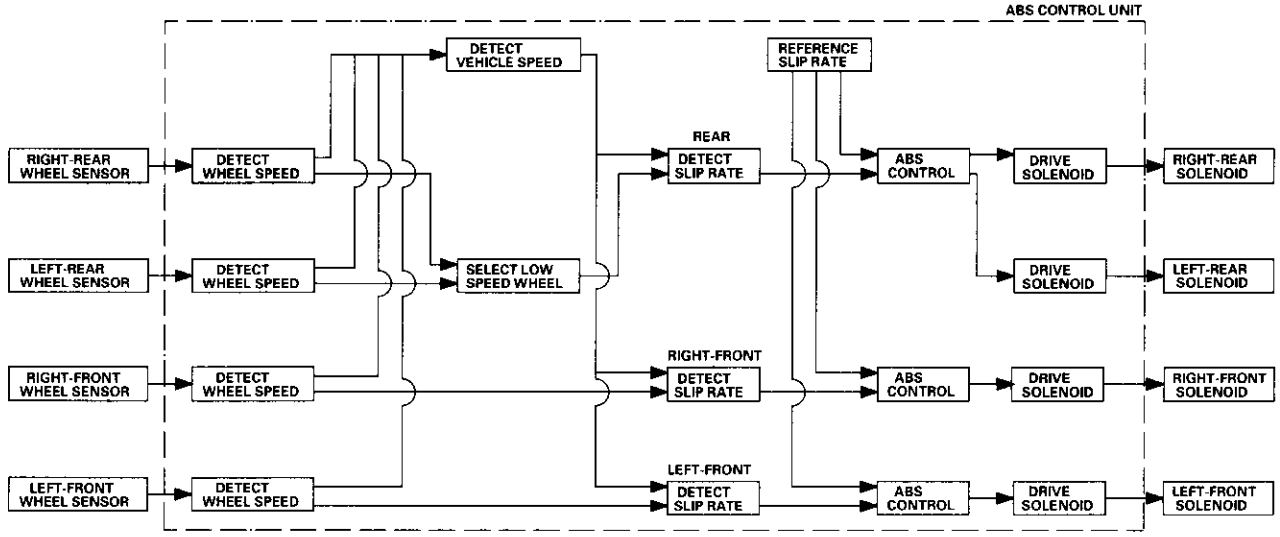


### Self-diagnosis Function

1. The ABS control unit is equipped with a main CPU and a sub-CPU. Each CPU checks the other for problems.
2. The CPUs check the circuit of the system.
3. The ABS control unit turns on the ABS indicator when the unit detects a problem, and the unit stops the system.
4. The self-diagnosis can be classified into these two categories:
   - Initial diagnosis
   - Regular diagnosis

### On-board Diagnosis Function

The ABS can be diagnosed with the Honda PGM Tester.
The ALB Checker cannot be used with this system. For air bleeding, and checking wheel sensor signals, use the Honda PGM Tester. See the Honda PGM Tester user's manuals for specific operating instructions.

(cont'd)

## System Description (cont'd)

### ABS Modulator

The ABS modulator consists of the inlet solenoid valve, outlet solenoid valve, reservoir, pump, pump motor, and the damping chamber. The modulator reduces the caliper fluid pressure directly. It is a circulating-type modulator because the brake fluid circulates through the caliper, reservoir, and the master cylinder. The hydraulic control has three modes: pressure intensifying, pressure retaining, and pressure reducing. The hydraulic circuit is an independent four channel type, one channel for each wheel.

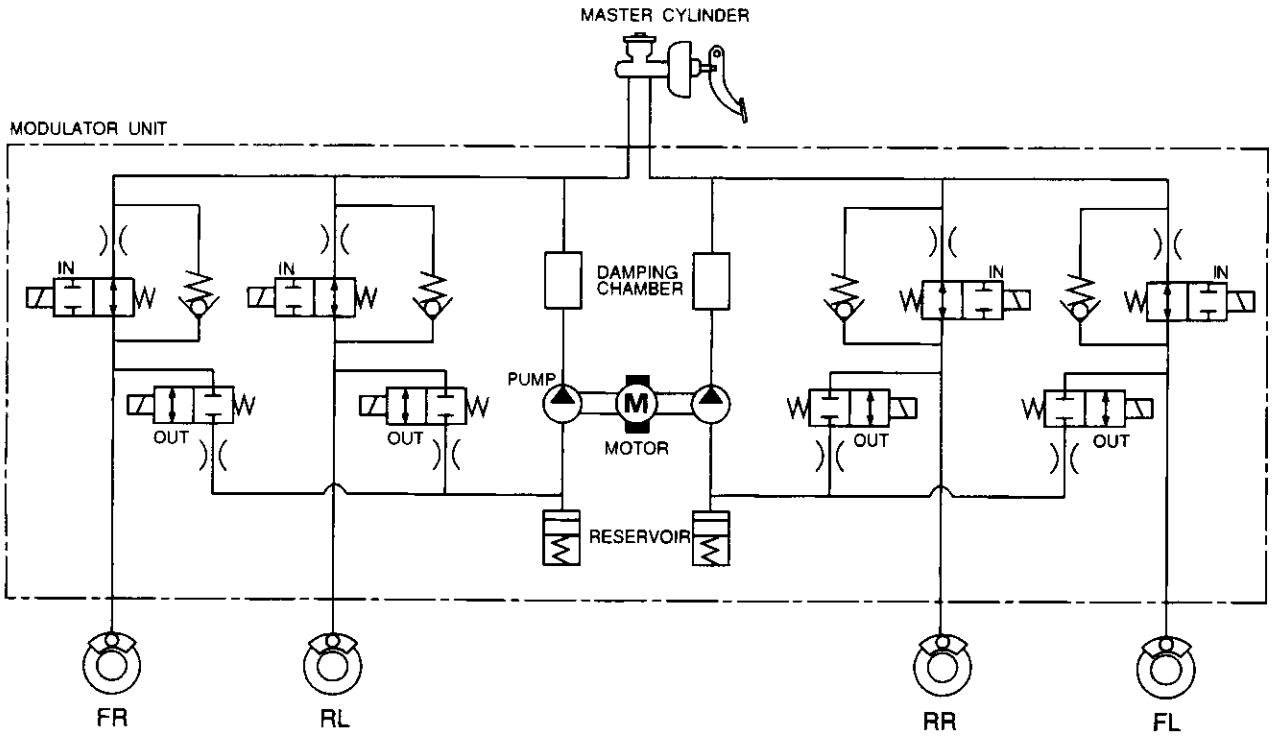


IN : INLET VALVE (NORMALLY OPEN)
OUT : OUTLET VALVE (NORMALLY CLOSED)

Pressure intensifying mode: Inlet valve open, outlet valve closed
Master cylinder fluid is pumped out to the caliper.

Pressure retaining mode: Inlet valve closed, outlet valve closed
Caliper fluid is retained by the inlet valve and outlet valve.

Pressure reducing mode: Inlet valve closed, outlet valve open
Caliper fluid flows through the outlet valve to the reservoir.

Motor operation mode: When starting the pressure reducing mode, the pump motor is ON.
When stopping ABS operation, the pump motor is OFF.
The reservoir fluid is pumped out by the pump, through the damping chamber, to the master cylinder.

## Wheel Sensors

The wheel sensors are the magnetic contactless type. As the gear pulser teeth rotate past the wheel sensor's magnetic coil, AC current is generated. The AC frequency changes in accordance with the wheel speed. The ABS control unit detects the wheel sensor signal frequency and thereby detects the wheel speed.

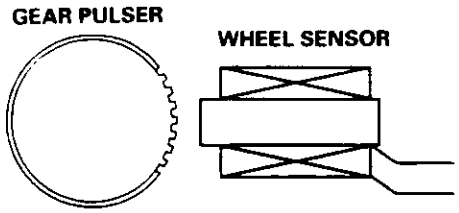


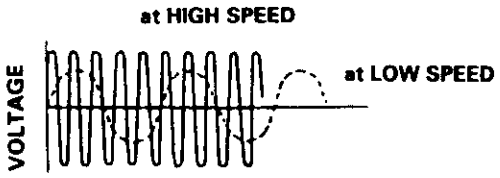


### Wheel Speed and Modulator Control

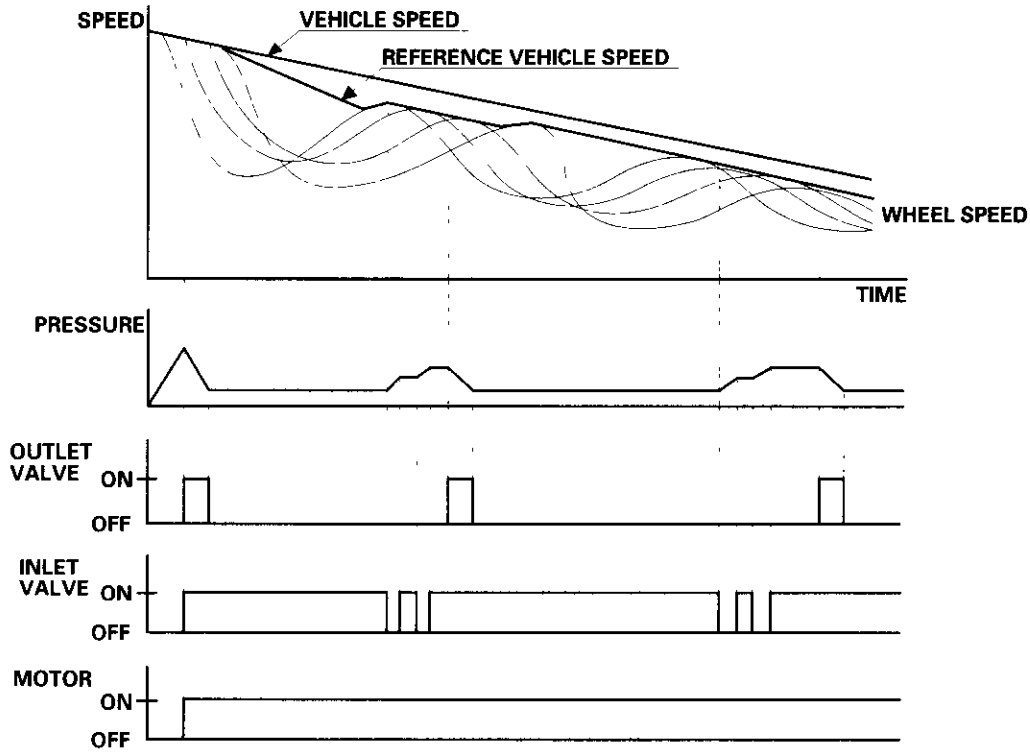


When the wheel speed drops sharply below the vehicle speed,the inlet valve closes and if necessary, the outlet valve opens momentarily to reduce the caliper fluid pressure. The pump motor starts at this time. As the wheel speed is restored, the outlet valve closes, and the inlet valve opens momentarily to increase the caliper fluid pressure.

# ABS Components

## Circuit Diagram

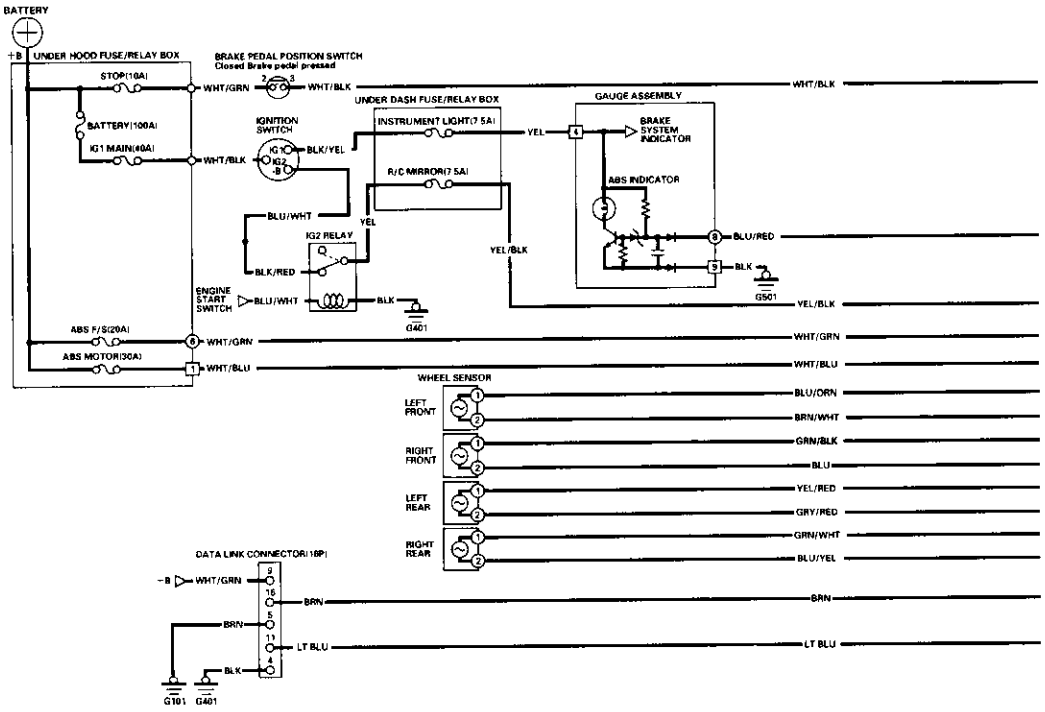


**MAIN UNDER-HOOD FUSE/RELAY BOX CONNECTORS**

**18P CONNECTOR (○number)**

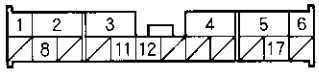


**7P CONNECTOR (□number)**

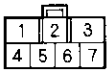


**GAUGE ASSEMBLY CONNECTORS**

**16P CONNECTOR (○number)**




**12P CONNECTOR (□number)**

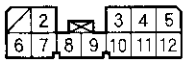


Wire side of female terminals

**BRAKE SWITCH 4P CONNECTOR**




**DATA LINK CONNECTOR (16P)**

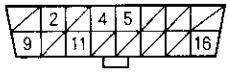


**WHEEL SENSOR 2P CONNECTOR**

**FRONT**




**REAR**




Terminal side of male terminals

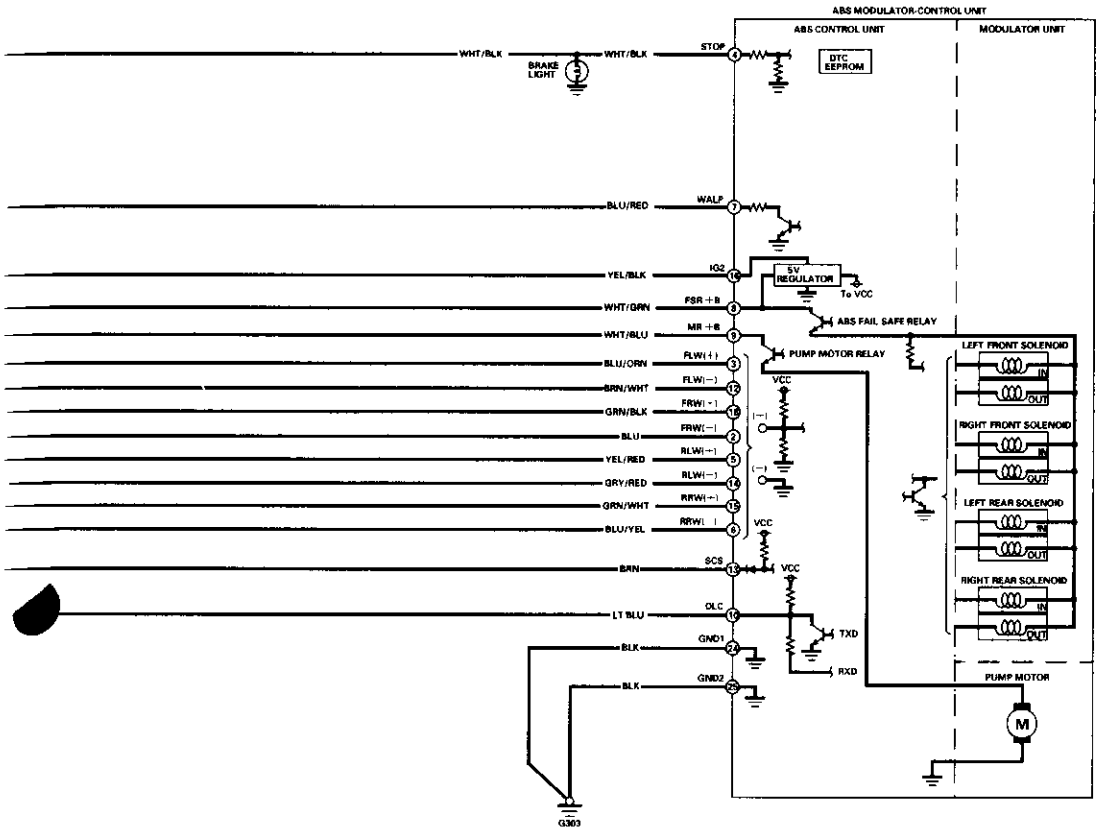


**ABS CONTROL UNIT 25P CONNECTOR**

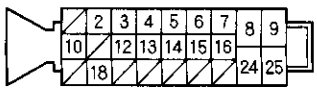


Wire side of female terminals

## DTC Troubleshooting

### DTC 11, 13, 15, 17: Wheel Sensor (Open/Short to Body Ground/Short to Power)

1. Disconnect the ABS control unit 25P connector.
2. Start the engine.
3. Measure the voltage between the appropriate wheel sensor (+) circuit terminal of the ABS control unit 25P connector and body ground (see table).

| DTC | Appropriate Terminal |
|---|---|
| 11 (Right-front) | No. 18: FRW (+) |
| 13 (Left-front) | No. 3: FLW (+) |
| 15 (Right-rear) | No. 15: RRW (+) |
| 17 (Left-rear) | No. 5: RLW (+) |

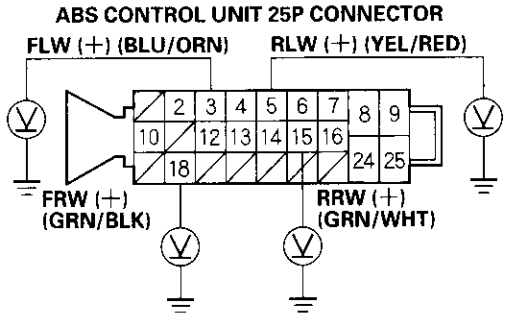

Wire side of female terminals

*Is there battery voltage?*

**YES** – Repair short to power in the (+) circuit wire between the ABS modulator control unit and the appropriate wheel sensor. ■

**NO** – Go to step 4.

4. Turn the ignition switch OFF.
5. Check for continuity between the appropriate wheel sensor (+) circuit terminal and body ground (see table).

| DTC | Appropriate Terminal |
|---|---|
| 11 (Right-front) | No. 18: FRW (+) |
| 13 (Left-front) | No. 3: FLW (+) |
| 15 (Right-rear) | No. 15: RRW (+) |
| 17 (Left-rear) | No. 5: RLW (+) |

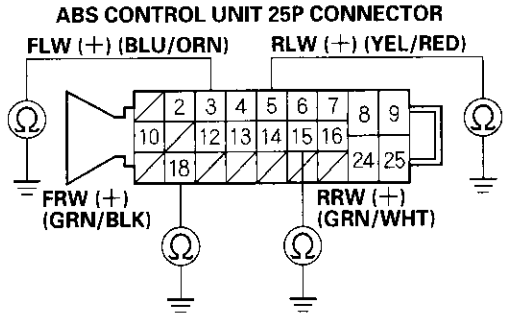

Wire side of female terminals

*Is there continuity?*

**YES** – Go to step 6.

**NO** – Go to step 7.

6. Disconnect the wire harness 2P connector from the appropriate wheel sensor, then check for continuity between the (+) and (–) terminals of the wire harness and body ground.

*Is there continuity?*

**YES** – Repair short to body ground in the (+) or (–) circuit wire between the ABS modulator-control unit and the wheel sensor. ■

**NO** – Replace the wheel sensor. ■

7. Check the resistance between the appropriate wheel sensor (+) and (−) circuit terminals (see table).

| DTC | Appropriate Terminal | |
|---|---|---|
| | (+) Side | (−) Side |
| 11 (Right-front) | No. 18: FRW (+) | No. 2: FRW (−) |
| 13 (Left-front) | No. 3: FLW (+) | No. 12: FLW (−) |
| 15 (Right-rear) | No. 15: RRW (+) | No. 6: RRW (−) |
| 17 (Left-rear) | No. 5: RLW (+) | No. 14: RLW (−) |

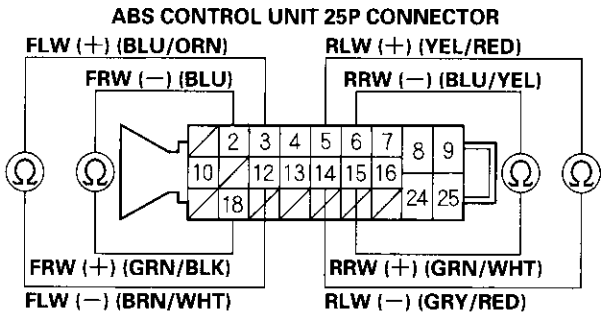

Wire side of female terminals

*Is the resistance between 450−2,000 Ω ?*

**YES** − Check for a loose ABS control unit 31P connector. If necessary, substitute a known-good ABS modulator-control unit, and recheck. ■

**NO** − Go to step 8.

8. Disconnect the wire harness 2P connector from the appropriate wheel sensor, and check the resistance between the (+) and (−) terminals of the wheel sensor.

*Is the resistance between 450−2,000 Ω ?*

**YES** − Repair open in the (+) or (−) circuit wire, or short between the (+) circuit wire and the (−) circuit wire between the ABS modulator-control unit and the wheel sensor. ■

**NO** − Replace the wheel sensor. ■

## DTC 12, 14, 16, 18: Wheel Sensor (Electrical Noise/Intermittent Interruption)

NOTE: If the ABS indicator comes because of electrical noise, the indicator goes off when you test-drive the vehicle at 19 mph (30 km/h).

1. Visually check for appropriate wheel sensor and pulser installation (see table). Measure pulser-to-sensor clearance. Inspect the pulsers for chipped or damage teeth (see page 19-60).

| DTC | Appropriate Wheel Sensor |
|---|---|
| 12 | Right-front |
| 14 | Left-front |
| 16 | Right-rear |
| 18 | Left-rear |

*Are the wheel sensor and pulser installed correctly?*

**YES** − Go to step 2.

**NO** − Reinstall or replace the appropriate wheel sensor or pulser. ■

2. Disconnect the ABS control unit 25P connector.

(cont'd)

## DTC Troubleshooting (cont'd)

3. Measure the resistance between the appropriate wheel sensor (+) and (−) circuit terminals (see table).

| DTC | Appropriate Terminal | |
|---|---|---|
| | (+) Side | (−) Side |
| 12 (Right-front) | No. 18: FRW (+) | No. 2: FRW (−) |
| 14 (Left-front) | No. 3: FLW (+) | No. 12: FLW (−) |
| 16 (Right-rear) | No. 15: RRW (+) | No. 6: RRW (−) |
| 18 (Left-rear) | No. 5: RLW (+) | No. 14: RLW (−) |

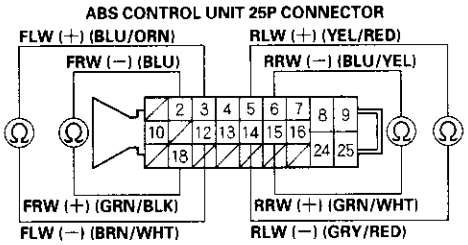

Wire side of female terminals

*Is there less than 450 Ω ?*

**YES** − Go to step 1.

**NO** − Go to step 4.

4. Check for continuity between the appropriate wheel sensor (+) circuit terminal and other wheel sensor (+) circuit terminals (see table).

| DTC | Appropriate Terminal | Other Terminal | | |
|---|---|---|---|---|
| 12 | No. 18: FRW (+) | No. 3 | No. 15 | No. 5 |
| 14 | No. 3: FLW (+) | No. 18 | No. 15 | No. 5 |
| 16 | No. 15: RRW (+) | No. 18 | No. 3 | No. 5 |
| 18 | No. 5: RLW (+) | No. 18 | No. 3 | No. 15 |

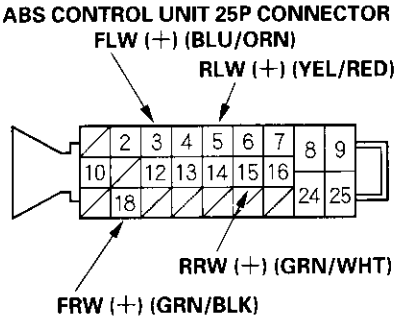

Wire side of female terminals

*Is there continuity?*

**YES** - Repair short in the wire between the appropriate wheel sensor and the other wheel sensor. ■

**NO** − Clear the DTC, and test-drive the vehicle. If the ABS indicator comes on and the same DTC is indicated, replace the ABS modulator-control unit. ■

5. Disconnect the harness 2P connector from the appropriate wheel sensor, and check the resistance between the (+) side and the (−) side of the wheel sensor.

*Is there less than 450 Ω ?*

**YES** Replace the wheel sensor.

**NO** − Repair short to wire between the appropriate wheel sensor (+) and (−) circuits. ■

## DTC 21, 22, 23, 24: Pulser

1. Clear the DTC (see step 1 on page 19-35).
2. Test-drive the vehicle at 19 mph (30 km/h) or more.

   *Does the ABS indicator come on, and are DTCs 21, 22, 23, 24 indicated?*

   **YES** – Go to step 3.

   **NO** – The system is OK at this time. ■
3. Check the appropriate pulser gears for a chipped or damaged tooth (see table).

| DTC | Appropriate Pulser |
|---|---|
| 21 | Right-front |
| 22 | Left-front |
| 23 | Right-rear |
| 24 | Left-rear |

   *Are the pulser gears OK?*

   **YES** – Check for loose terminals in the ABS control unit 25P connector. If necessary, substitute a known-good ABS modulator-control unit, and recheck. ■

   **NO** – Replace the driveshaft or hub unit with the chipped pulser gear. ■

## DTC 31, 32, 33, 34, 35, 36, 37, 38: Solenoid

1. Clear the DTC (see step 1 on page 19-35).
2. Turn the ignition switch ON (II).
3. Verify the DTC.

   *Does the ABS indicator come on, and are DTCs 31, 32, 33, 34, 35, 36, 37, 38 indicated?*

   **YES** – Check for loose terminals in the ABS control unit 25P connector. If necessary, substitute a known-good ABS modulator-control unit, and recheck. ■

   **NO** – The system is OK at this time. ■

## DTC Troubleshooting (cont'd)

### DTC 41, 42, 43, 44: Wheel Lock

1. Lift up the vehicle so all four wheels are off the ground, and release the parking brake.
2. Check for brake drag with the brakes hot.

   *Do the brakes drag?*

   **YES** – Repair the brake drag. ■

   **NO** – Go to step 3.
3. Check the installation of the appropriate wheel sensor (see table).

| DTC | Appropriate Wheel |
|---|---|
| 41 | Right-front |
| 42 | Left-front |
| 43 | Right-rear |
| 44 | Left-rear |

   *Is it correct?*

   **YES** – Go to step 4.

   **NO** – Reinstall the wheel sensor correctly. ■
4. Connect the PGM Tester to the DLC.
5. Choose MISC TEST from the ABS menu, then select function test.
6. Choose the out solenoid for the appropriate DTC (see table), and follow the on screen prompts.
7. Apply the brakes, and have an assistant attempt to rotate the appropriate wheel for the DTC, then actuate the out solenoid. When the solenoid is actuated, the wheel should rotate, and then lock up.

   *Did the wheel rotate?*

   **YES** – The probable cause was that the vehicle spun during cornering. If the problem recurs, check for loose connectors, or try a known-good ABS modulator-control unit. ■

   **NO** – Check for loose ABS modulator-control unit connectors. If necessary, replace the ABS modulator-control unit. ■

### DTC 51: Motor Lock

1. Check the ABS MOTOR (30 A) fuse in the main under-hood fuse/relay box, and reinstall the fuse if it is OK.

   *Is the fuse OK?*

   **YES** – Go to step 2.

   **NO** – Replace the fuse, and recheck. ■
2. Disconnect the ABS control unit 25P connector.
3. Measure the voltage between the ABS control unit 25P connector terminal No. 9 and body ground.

**ABS CONTROL UNIT 25P CONNECTOR**

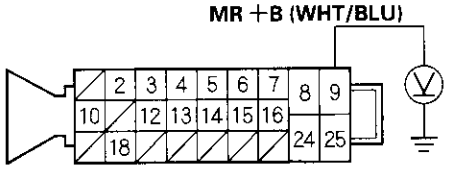


Wire side of female terminals

   *Is there battery voltage?*

   **YES** – Go to step 4.

   **NO** – Repair open in the wire between the ABS MOTOR (30 A) fuse and the ABS control unit. ■
4. Connect the ABS control unit 25P connector.
5. Clear the DTC (see step 1 on page 19-35).
6. Test-drive the vehicle at 6 mph (10 km/h) or more.

   *Does the ABS indicator come on, and is DTC 51 indicated?*

   **YES** – Replace the ABS modulator-control unit. ■

   **NO** – The system is OK at this time. ■

## DTC 52: Motor Stuck OFF

1. Check the ABS MOTOR (30 A) fuse in the main under-hood fuse/relay box, and reinstall the fuse if it is OK.

   *Is the fuse OK?*

   **YES** – Go to step 2.

   **NO** – Replace the fuse, and recheck. ■

2. Disconnect the ABS control unit 25P connector.

3. Measure the voltage between the ABS control unit 25P connector terminal No. 9 and body ground.

**ABS CONTROL UNIT 25P CONNECTOR**

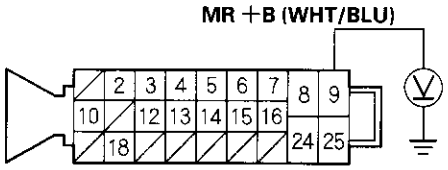


Wire side of female terminals

*Is there battery voltage?*

**YES** – Check for loose terminals in the ABS control unit 25P connector. If necessary, substitute a known-good ABS modulator-control unit, and recheck. ■

**NO** – Repair open in the wire between the ABS MOTOR (30 A) fuse and the ABS control unit. ■

## DTC 53: Motor Stuck ON

1. Clear the DTC (see step 1 on page 19-35).

2. Test-drive the vehicle.

   *Does the ABS indicator come on, and is DTC 53 indicated?*

   **YES** – Replace the ABS modulator-control unit. ■

   **NO** – The system is OK at this time. ■

## DTC Troubleshooting (cont'd)

### **DTC 54:** ABS Fail-safe Relay

1. Clear the DTC (see step 1 on page 19-35).
2. Test-drive the vehicle.

   *Does the ABS indicator come on, and is DTC 54 indicated?*

   **YES** – Replace the ABS modulator-control unit.■

   **NO** – Intermittent failure; the vehicle is OK at this time.■

### **DTC 61, 62:** FSR + B Voltage

1. Clear the DTC (see step 1 on page 19-35).
2. Test-drive the vehicle at 6 mph (10 km/h) or more.

   *Does the ABS indicator come on?*

   **YES** – Go to step 3.

   **NO** – The system is OK at this time.■

3. Verify the DTC.

   *Is DTC 61 or 62 indicated?*

   **YES** – Check the charging system.■

   **NO** – Do the appropriate troubleshooting for the DTC.■

## **DTC 71:** Different Diameter Tire

1. Clear the DTC (see step 1 on page 19-35).
2. Test-drive the vehicle.

   *Does the ABS indicator come on, and is DTC 71 indicated?*

   **YES** – Make sure all four tires are the specified size and are inflated to proper specification. ■

   **NO** – Intermittent failure; the vehicle is OK at this time. ■

## **DTC 81:** Central Processing Unit (CPU) Diagnosis, and ROM/RAM Diagnosis

1. Clear the DTC (see step 1 on page 19-35).
2. Test-drive the vehicle.

   *Does the ABS indicator come on, and is DTC 81 indicated?*

   **YES** – Replace the ABS modulator-control unit. ■

   **NO** – Intermittent failure; the vehicle is OK at this time. ■

## ABS Indicator Circuit Troubleshooting

### ABS indicator does not come on

1. Turn the ignition switch ON (II), and watch the ABS indicator.

   *Does the ABS indicator come on?*

   **YES** – The system is OK at this time.■

   **NO** – Go to step 2.

2. Turn the ignition switch OFF then ON (II) again.

   *Does the brake system indicator come on?*

   **YES** – Go to step 3.

   **NO** – Repair open in the indicator power source circuit.■
   - Blown INSTRUMENT LIGHT (7.5 A) fuse.
   - Open in the wire between the INSTRUMENT LIGHT (7.5 A) fuse and gauge assembly.
   - Open circuit inside the fuse box.

3. Turn the ignition switch OFF.

4. Disconnect the ABS control unit 25P connector.

5. Turn the ignition switch ON (II).

   *Does the ABS indicator come on?*

   **YES** – Check for loose terminals in the ABS control unit 25P connector. If necessary, substitute a known-good ABS modulator-control unit, and recheck.■

   **NO** – Go to step 6.

6. Check the ABS indicator bulb in the gauge assembly.

   *Is the bulb OK?*

   **YES** – Go to step 7.

   **NO** – Replace the ABS indicator bulb.■

7. Turn the ignition switch OFF.

8. Remove the gauge assembly (see page 22-52).

9. Disconnect the gauge assembly 16P connector.

10. Check for continuity between the gauge assembly 16P connector terminal No. 8 and body ground.

**GAUGE ASSEMBLY 16P CONNECTOR**

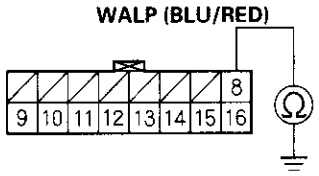


Wire side of female terminals

*Is there continuity?*

**YES** – Repair short to body ground in the wire between the gauge assembly and the ABS control unit.■

**NO** – Go to step 11.

11. Connect the gauge assembly 16P connector, and disconnect the gauge assembly 12P connector.

12. Check for continuity between the gauge assembly 12P connector terminal No. 9 and body ground.

**GAUGE ASSEMBLY 12P CONNECTOR**

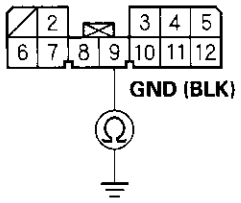


Wire side of female terminals

*Is there continuity?*

**YES** – Check for loose terminals in the gauge assembly connectors. If the connector is OK, replace the gauge assembly.■

**NO** – Repair open in the wire between the gauge assembly and body ground (G501).■

## ABS indicator does not go off

1. Check the ABS +B (20 A) fuse in the main under-hood fuse/relay box, and reinstall the fuse if it is OK.

   *Is the fuse OK?*

   **YES** – Go to step 2.

   **NO** – Replace the fuse, and recheck. If the fuse is blown, check for a short to body ground in this fuse circuit. If the circuit is OK, replace the ABS modulator-control unit. ■

2. Check the R/C MIRROR (7.5 A) fuse in the under-dash fuse/relay box, and reinstall the fuse if it is OK.

   *Is the fuse OK?*

   **YES** – Go to step 3.

   **NO** – Replace the fuse, and recheck. If the fuse is blown, check for a short to body ground in this fuse circuit. ■

3. Disconnect the ABS control unit 25P connector.

4. Measure the voltage between the ABS control unit 25P connector terminal No. 8 and body ground.

**ABS CONTROL UNIT 25P CONNECTOR**

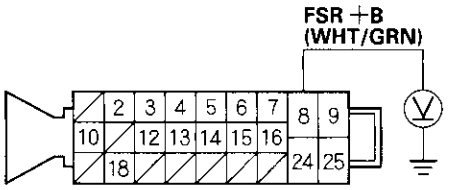


Wire side of female terminals

*Is there battery voltage?*

**YES** – Go to step 5.

**NO** – Repair open in the wire between the ABS +B (20 A) fuse and the ABS control unit. ■

5. Turn the ignition switch ON (II).

6. Measure the voltage between the ABS control unit 25P connector terminal No. 16 and body ground.

**ABS CONTROL UNIT 25P CONNECTOR**

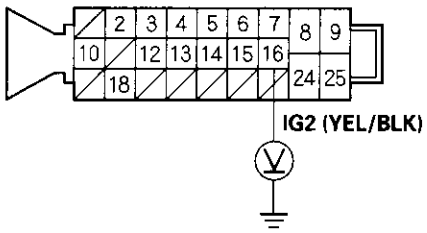


Wire side of female terminals

*Is there battery voltage?*

**YES** – Go to step 7.

**NO** – Repair open in the wire between the R/C MIRROR (7.5 A) fuse and the ABS control unit. ■

7. Turn the ignition switch OFF.

8. Check for continuity between the ABS control unit 25P connector terminal No. 24 and body ground.

**ABS CONTROL UNIT 25P CONNECTOR**

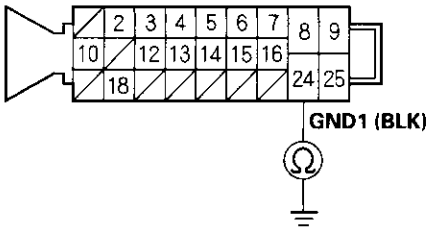


Wire side of female terminals

*Is there continuity?*

**YES** – Go to step 9.

**NO** – Repair open in the wire between the ABS control unit and body ground (G303). ■

(cont'd)

## ABS Indicator Circuit Troubleshooting (cont'd)

9. Turn the ignition switch ON (II).

10. Connect the ABS control unit 25P connector terminal No. 7 and body ground with a jumper wire.

**ABS CONTROL UNIT 25P CONNECTOR**

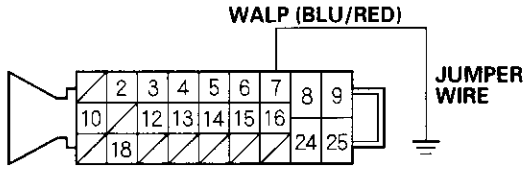


Wire side of female terminals

*Does the ABS indicator go off?*

**YES**—Check for loose terminals in the ABS control unit 25P connector. If necessary, substitute a known-good ABS modulator-control unit, and recheck.■

**NO**—Go to step 11.

11. Connect the gauge assembly 16P connector terminal No. 8 and body ground with a jumper wire.

**GAUGE ASSEMBLY 16P CONNECTOR**

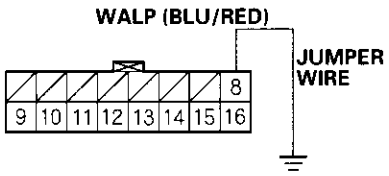


Wire side of female terminals

*Does the ABS indicator go off?*

**YES**—Repair open in the wire between the gauge assembly and the ABS control unit.■

**NO**—Check for loose gauge assembly connectors. If the connector is OK, replace the gauge assembly.■

# ABS Modulator-Control Unit Removal and Installation

NOTE:
- Do not spill brake fluid on the vehicle; it may damage the paint; if brake fluid gets on the paint, wash it off immediately with water.
- Take care not to damage or deform the brake lines during removal and installation.
- To prevent the brake fluid from flowing, plug and cover the hose ends and joints with a shop towel or equivalent material.

## Removal

1. Pull up the lock (B) of the ABS control unit 25P connector (C), then disconnect the connector.

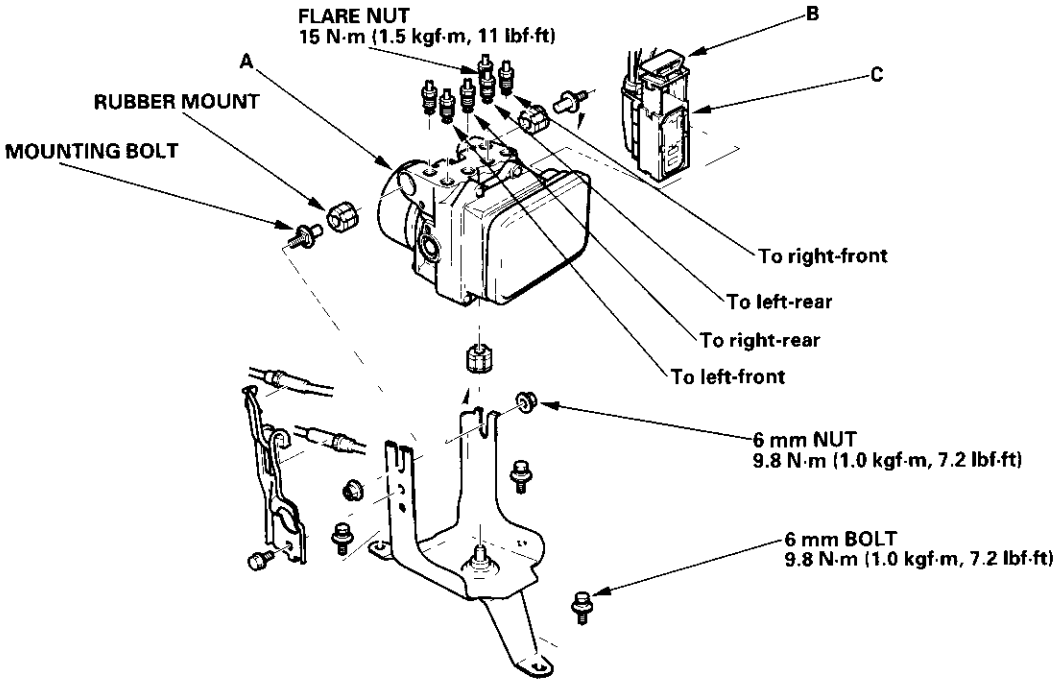


2. Disconnect the six brake lines.
3. Remove the two 6 mm nuts.
4. Remove the ABS modulator-control unit (A).

## Installation

1. Install the ABS modulator-control unit, then tighten the two 6 mm nuts.
2. Align the connecting surface of the ABS control unit 25P connector.
3. Push in the lock of the ABS control unit 25P connector until you hear it click into place, then connect the connector.
4. Bleed the brake system, starting with the front wheels.
5. Start the engine, and check that the ABS indicator goes off.
6. Test-drive the vehicle, and check that the ABS indicator does not come on.

## Wheel Sensor Inspection

1. Inspect the front and rear pulsers for chipped or damaged teeth.
2. Measure the air gap between the wheel sensor and pulser all the way around while rotating the pulser. Remove the rear brake disc to measure the gap on the rear wheel sensor. If the gap exceeds 1.0 mm (0.04 in), check for a bent suspension arm.

**Standard:**
**Front/Rear: 0.4 – 1.0 mm (0.02 – 0.04 in.)**

**Front/Rear**

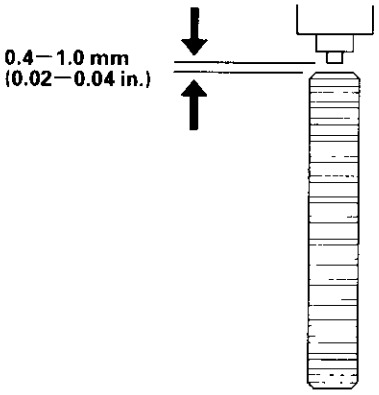


## Wheel Sensor Replacement

NOTE: Install the sensors carefully to avoid twisting the wires.

**Front:**

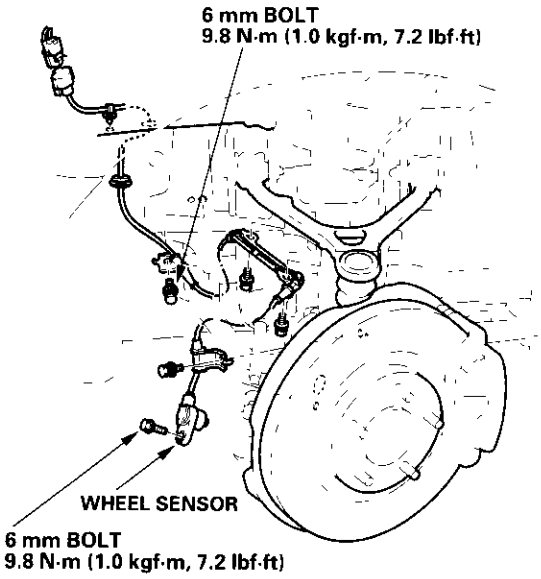


**Rear:**

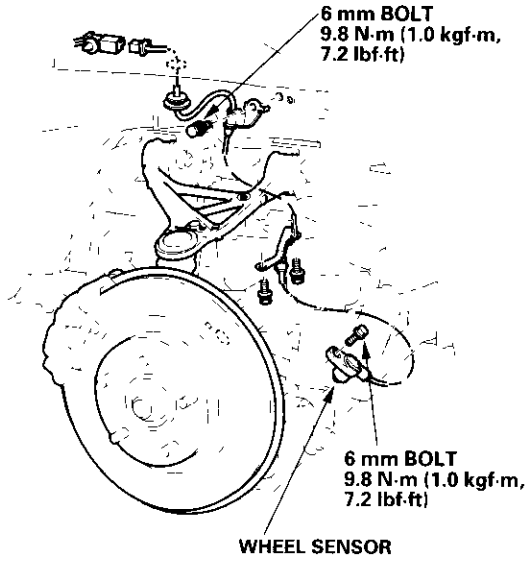

# Body


**Doors**
- Component Location Index ..... 20-2
- Door Panel Removal/ Installation ..... 20-4
- Door Outer Handle Replacement ..... 20-5
- Door Latch Replacement ..... 20-7
- Door Glass and Regulator Replacement ..... 20-8
- Door Glass Adjustment ..... 20-11
- Door Sash Holder Replacement ..... 20-15
- Door Sash Holder Adjustment ..... 20-16
- Door Glass Outer Weatherstrip Replacement ..... 20-16
- Door Weatherstrip Replacement ..... 20-17
- Door Wedge and Door Wedge Holder Replacement ..... 20-17
- Door Position and Door Striker Adjustment ..... 20-18

**Mirrors**
- Component Location Index ..... 20-20
- Power Mirror Replacement ..... 20-21
- Mirror Holder Replacement ..... 20-21
- Rearview Mirror Replacement ..... 20-22

**Glass**
- Component Location Index ..... 20-23
- Glass Replacement Process ..... 20-25
- Windshield Replacement ..... 20-29
- Rear Window Replacement ..... 20-32

**Convertible Top**
- Component Location Index ..... 20-35
- Convertible Top Assembly Replacement ..... 20-38
- Convertible Top Cloth Replacement ..... 20-40
- Rear Window Replacement ..... 20-43
- Rear Window Lower Molding/ Rear Window Harness Holder Replacement ..... 20-47
- Convertible Top Cloth Repair ..... 20-48
- Convertible Top Lock Handle Replacement ..... 20-49
- Convertible Top Lock Handle Operation Load Adjustment ..... 20-49
- Convertible Top Motor Replacement ..... 20-50
- Convertible Top Striker Replacement ..... 20-50
- A-Pillar-Header Weatherstrip and A-Pillar Molding Replacement ..... 20-51
- B-Pillar Outer Weatherstrip Replacement ..... 20-52
- Drain Tank and Lower Drain Hose Replacement ..... 20-52
- Convertible Top Cover Snap Replacement ..... 20-53

**Removable Hardtop**
- Component Location Index ..... 20-54
- Interior Trim Removal/ Installation ..... 20-55
- Headliner Removal/ Installation ..... 20-56
- Roof Molding Replacement ..... 20-57
- Hardtop Lower Weatherstrip Replacement ..... 20-60
- Roof Front Trim Replacement ..... 20-61
- Hardtop Lock Handle Replacement ..... 20-61
- Roof Side Lock Replacement ..... 20-62
- Hardtop Striker Replacement ..... 20-63
- Body Side Catch Assembly Replacement ..... 20-63
- Body Side Catch Replacement ..... 20-64
- Roof Position Adjustment ..... 20-65

**Interior Trim**
- Component Location Index ..... 20-67
- Trim Removal/Installation —Front Roof Area ..... 20-68
- Trim Removal/Installation —Door Area ..... 20-69
- Trim Removal/Installation —Seat Side Area ..... 20-70
- Trim Removal/Installation —Rear Tray Area ..... 20-71
- Trim Removal/Installation —Trunk Area ..... 20-73
- Carpet Replacement ..... 20-74
- * Center Carpet Replacement ..... 20-75

**Consoles**
Center Console Removal/ Installation ..... 20-76
Wind Defector Replacement ..... 20-77
Rear Console Removal/ Installation ..... 20-78
Rear Console Box Replacement ..... 20-79

**Dashboard**
Instrument Panel Removal/ Installation ..... 20-80
Radio Panel Removal/ Installation ..... 20-80
Front Console Cover Removal/ Installation ..... 20-81
Passenger's Dashboard Lower Cover Removal/Installation ..... 20-81
Passenger's Side Vent Removal/Installation ..... 20-82
* Dashboard Removal/ Installation ..... 20-82

**Seats**
Component Location Index ..... 20-85
Seat Removal/Installation ..... 20-86
Seat Disassembly/Reassembly —Driver's ..... 20-87
Seat Disassembly/Reassembly —Passenger's ..... 20-88
Seat Cover Replacement ..... 20-89

**Bumpers**
Front Bumper Removal/ Installation ..... 20-92
Rear Bumper Removal/ Installation ..... 20-93

**Hood**
Adjustment ..... 20-94
Hood Insulator Replacement ..... 20-96

**Trunk Lid**
Adjustment ..... 20-97
Trunk Lid Torsion Bar Replacement ..... 20-98
Trunk Lid Rubber Protector Replacement ..... 20-99
Trunk Lid Weatherstrip Replacement ..... 20-99

**Fuel Fill Door**
Adjustment ..... 20-100

**Exterior Trim**
Cowl Cover Replacement ..... 20-101
Rear Tray Opening Molding Replacement ..... 20-102
Rear Window Lower Molding Replacement ..... 20-102
Emblem Replacement ..... 20-103
A-Pillar Exterior Trim Replacement ..... 20-104

**Fenderwell**
Inner Fender Replacement ..... 20-105
Strakes Replacement ..... 20-106
Fenderwell Trim Replacement ..... 20-107
Rear Air Outlet Replacement ..... 20-107

**Openers**
Component Location Index .... 20-108
Hood Opener Cable Replacement ..... 20-109
Fuel Fill Door Opener Cable Replacement ..... 20-110
Hood Release Handle Replacement ..... 20-111
Hood Latch Replacement ..... 20-111
Trunk Lid Latch Replacement ..... 20-112
Trunk Lid Lock Cylinder Replacement ..... 20-113

**Frame**
Front Subframe Replacement ..... 20-114
Rear Subframe Replacement ..... 20-115
* Frame Repair Chart ..... 20-116

## Component Location Index

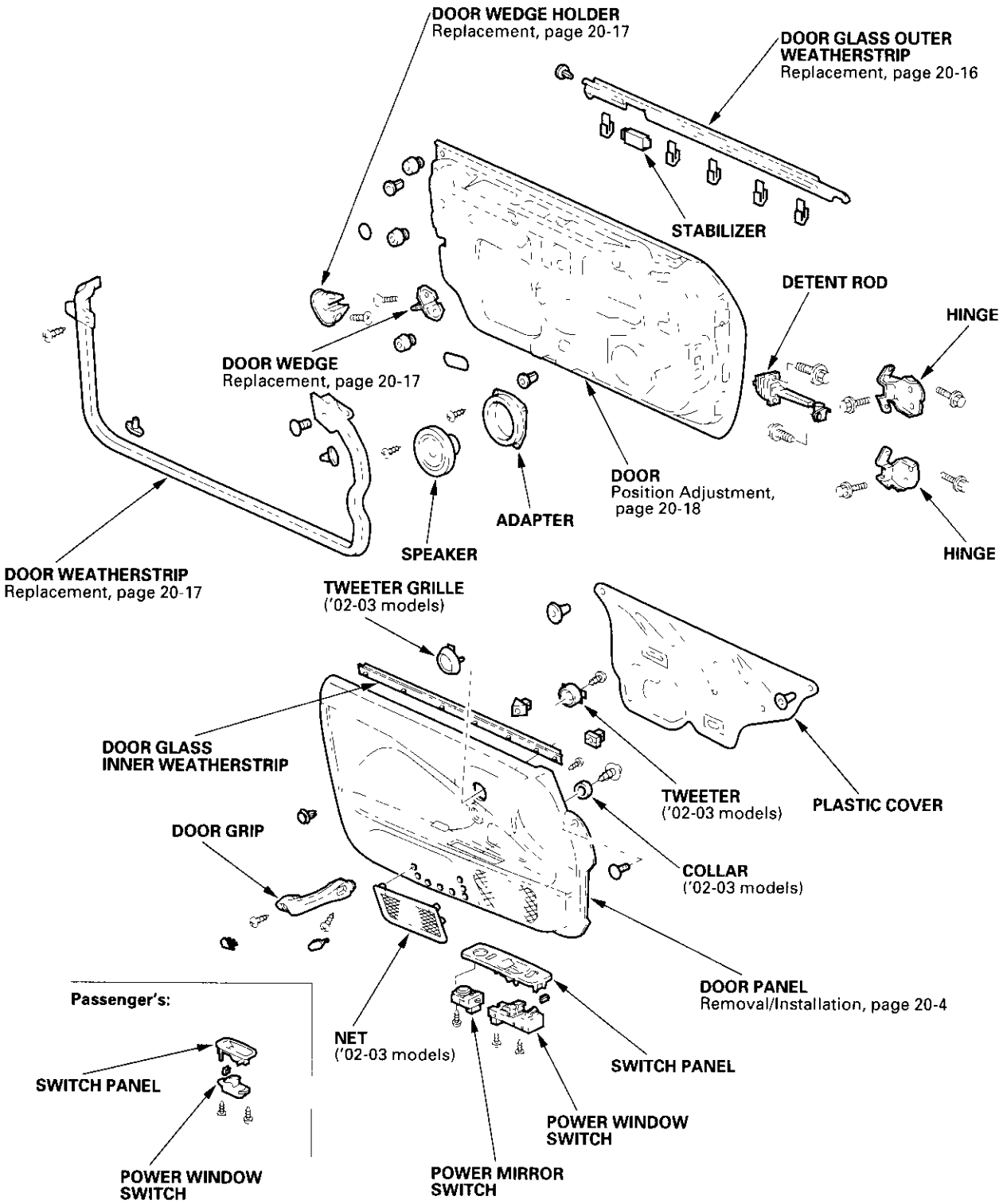

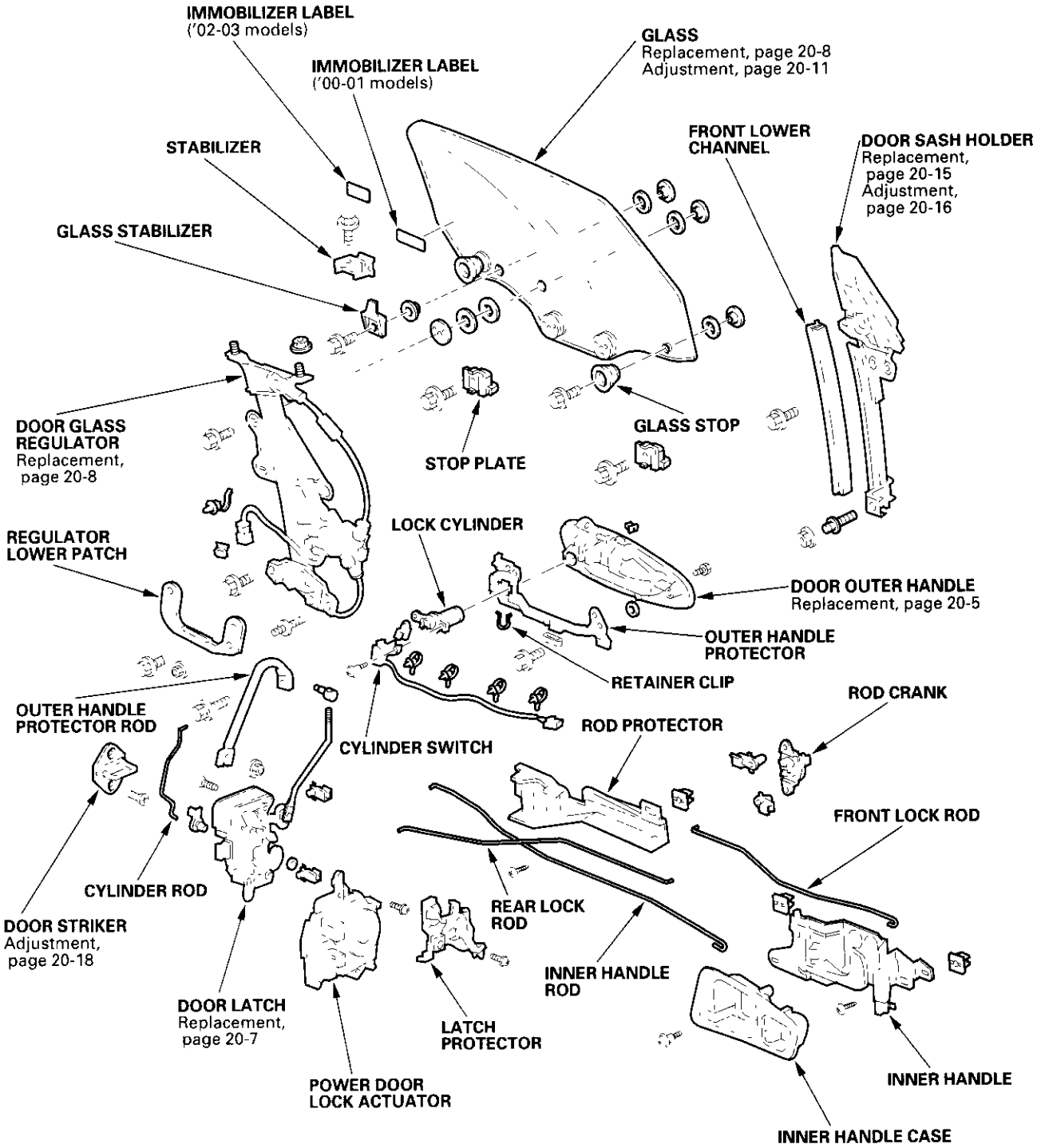
IMMOBILIZER LABEL
('02-03 models)
IMMOBILIZER LABEL
('00-01 models)
GLASS
Replacement, page 20-8
Adjustment, page 20-11
STABILIZER
FRONT LOWER CHANNEL
DOOR SASH HOLDER
Replacement, page 20-15
Adjustment, page 20-16
GLASS STABILIZER
DOOR GLASS REGULATOR
Replacement, page 20-8
STOP PLATE
GLASS STOP
REGULATOR LOWER PATCH
LOCK CYLINDER
DOOR OUTER HANDLE
Replacement, page 20-5
OUTER HANDLE PROTECTOR
RETAINER CLIP
OUTER HANDLE PROTECTOR ROD
ROD CRANK
ROD PROTECTOR
CYLINDER SWITCH
FRONT LOCK ROD
CYLINDER ROD
DOOR STRIKER
Adjustment, page 20-18
REAR LOCK ROD
INNER HANDLE ROD
DOOR LATCH
Replacement, page 20-7
LATCH PROTECTOR
INNER HANDLE
POWER DOOR LOCK ACTUATOR
INNER HANDLE CASE

## Door Panel Removal/Installation

**Special Tools Required**
Trim pad remover, Snap-on A 177A, or equivalent, commercially available.

NOTE:
- Take care not to scratch the door panel and door.
- When prying with a flat-tip screwdriver, wrap it with protective tape to prevent damage.

1. Remove the door panel in the numbered sequence. Remove the door panel with as little bending as possible to avoid creasing or breaking it.

2. Install the panel in the reverse order of removal, and note these items:

   - Replace any damaged clips.
   - Make sure the connectors are plugged in properly.
   - Check the window and power door lock operations.

**Fastener Locations**
**A ▶ : Screw, 1  B ▶ : Screw, 1  C ▶ : Screw, 1  D ▷ : Clip, 1  E ▷ : Clip, 6**

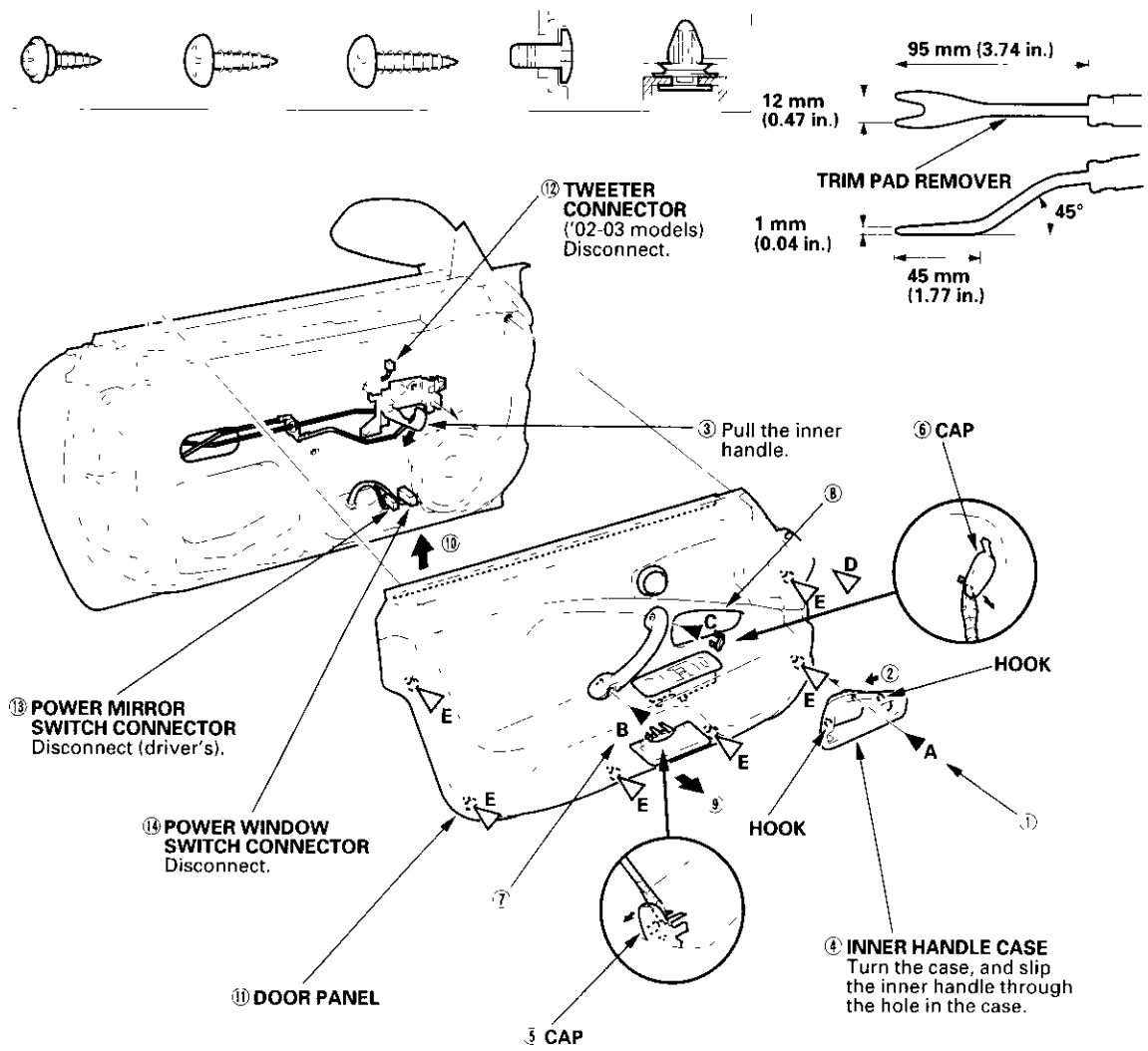

## Door Outer Handle Replacement

NOTE:
- Put on gloves to protect your hands.
- Take care not to scratch the door.
- Take care not to bend each rod.

1. Remove these items:
   - Door panel
   - Plastic cover, as necessary (see page 20-2)
2. Remove the door outer handle in numbered sequence.
3. Install the outer handle in the reverse order of removal, and note these items:
   - Make sure the cylinder switch harness is routed properly.
   - Make sure the cylinder switch connector is plugged in properly, and each rod is connected securely.
   - When installing the lock cylinder, leave the outer handle bolts loose so the outer handle protector does not interfere with the lock cylinder installation, then tighten the handle bolts.
   - Install the retainer clip on the outer handle, then install the lock cylinder. Be sure the retainer clip is fully seated in the slot on the lock cylinder.
   - Make sure the door locks and opens properly.
   - When reinstalling the door panel, make sure the plastic cover is installed properly and sealed around its perimeter.

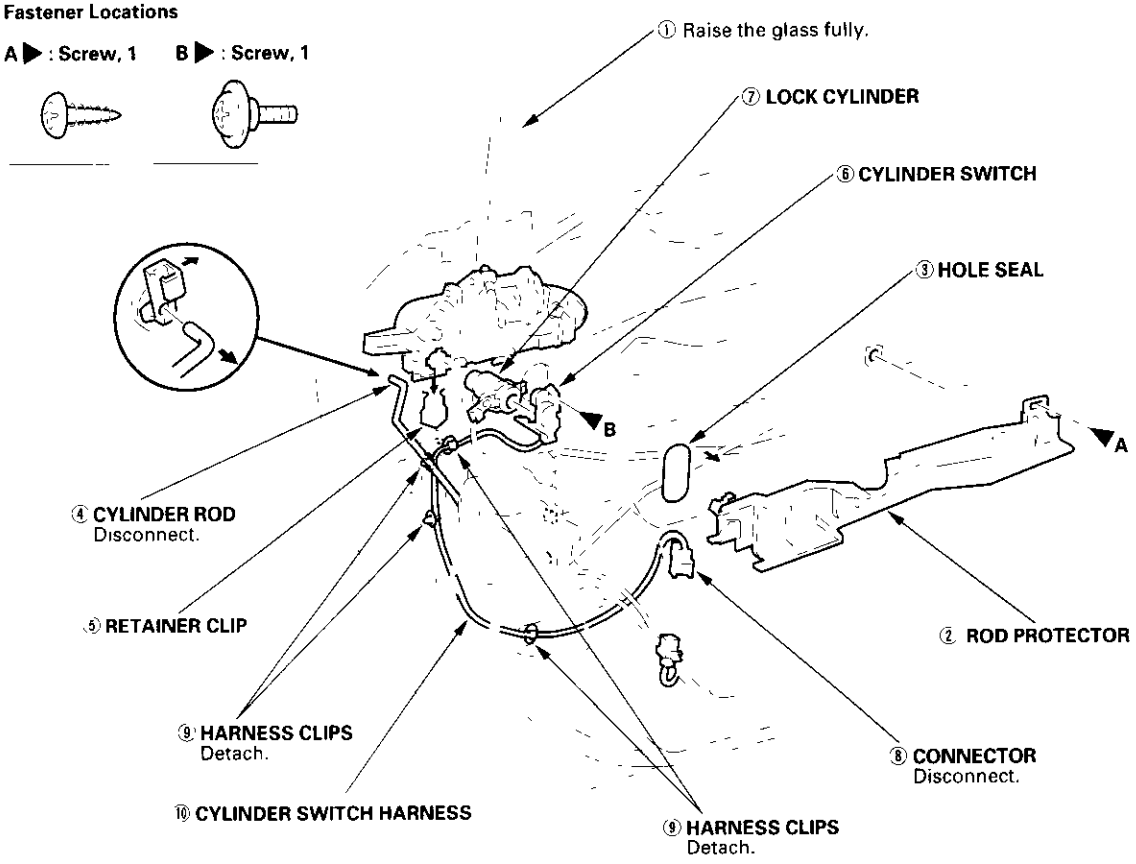


(cont'd)

## Door Outer Handle Replacement (cont'd)

**Fastener Locations**

C ● : Nut, 1 D ▶ : Bolt, 1 E ▶ : Bolt, 2 F ▶ : Screw, 1 G ▶ : Screw, 2



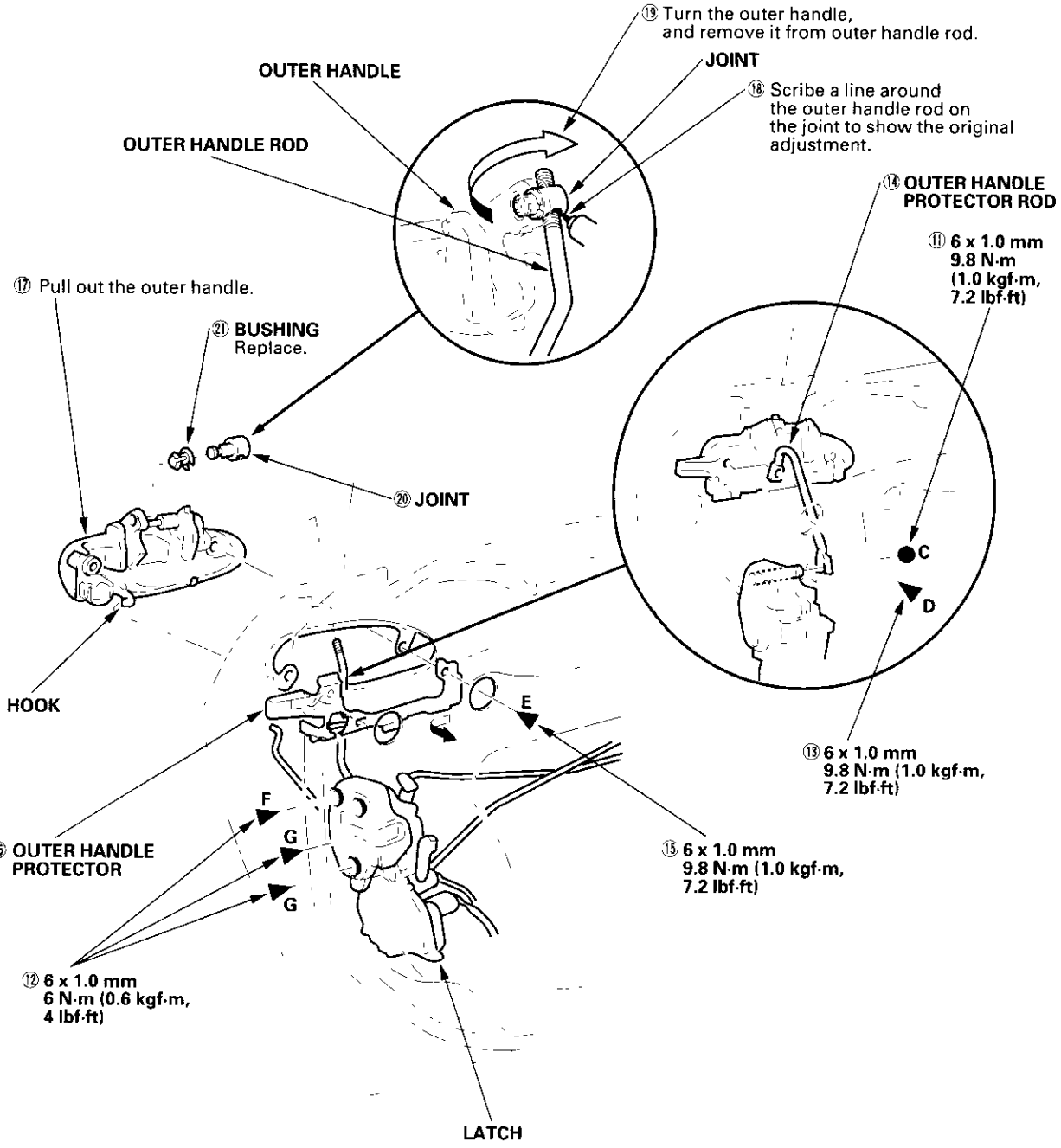

## Door Latch Replacement

NOTE:
- Put on gloves to protect your hands.
- Take care not to scratch the door.
- Take care not to bend each rod.

1. Remove the outer handle (see page 20-5).

2. Remove the door latch in numbered sequence.

3. Install the latch in the reverse order of removal, and note these items:

   - Make sure the actuator connectors are plugged in properly, and each rod is connected securely.
   - Make sure the door locks and opens properly.
   - When reinstalling the door panel, make sure the plastic cover is installed properly and sealed around its perimeter.

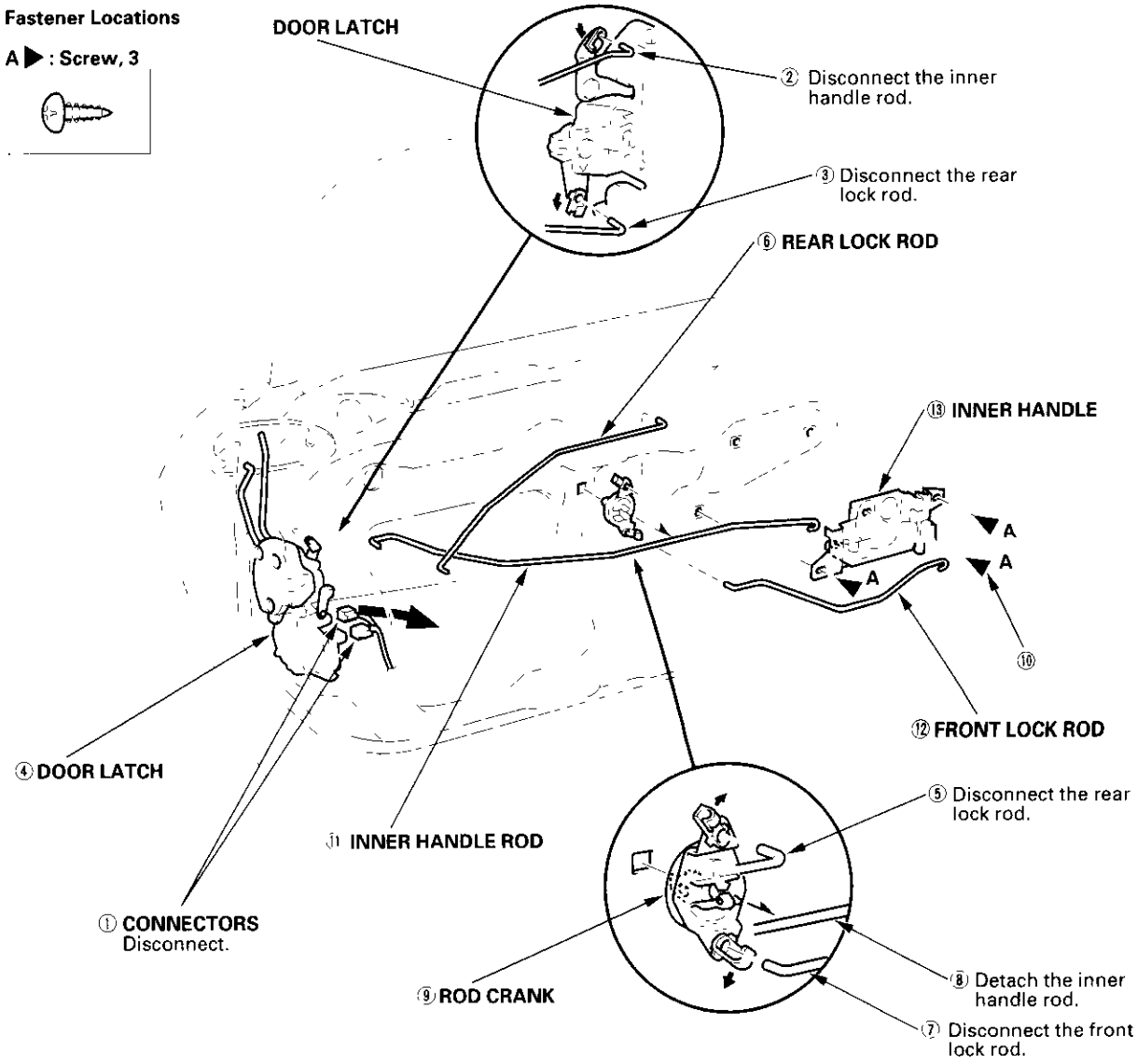

## Door Glass and Regulator Replacement

NOTE:
- Put on gloves to protect your hands.
- Take care not to scratch the door.
- Take care not to drop the window glass inside the door.

1. Remove these items:
   - Inner handle and rod crank (see page 20-7)
   - Plastic cover (see page 20-2)

2. Remove the door glass and regulator in numbered sequence:
   - Hold the adjusting bolts with a hex wrench when removing the locknuts.
   - Scribe a line around the stabilizer mounting bolt, the glass mounting bolts, and the regulator mounting nuts to show the original locations.

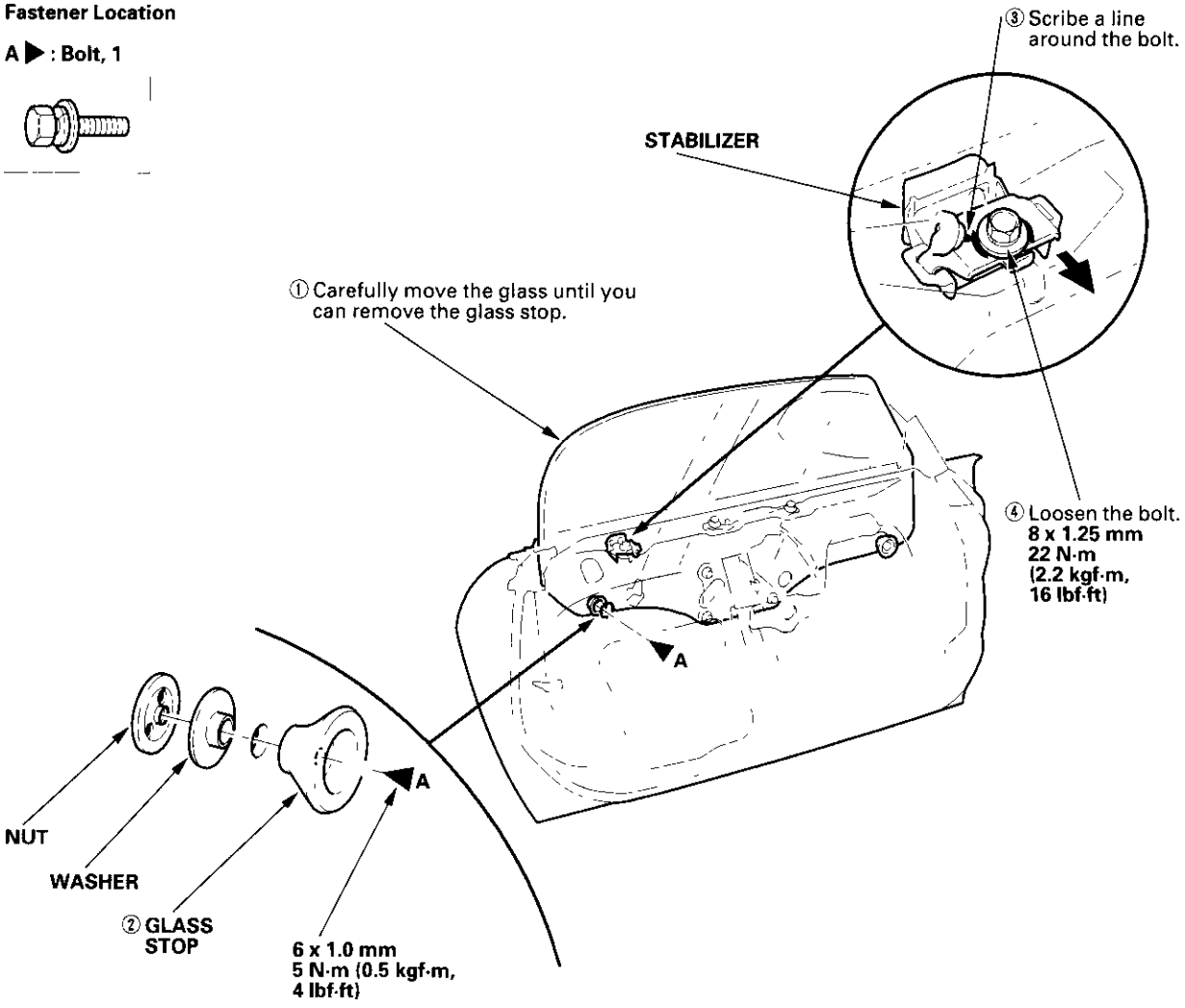

**Fastener Locations**

**B ▶ : Bolt, 3**

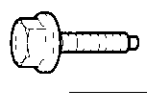




(cont'd)

## Door Glass and Regulator Replacement (cont'd)

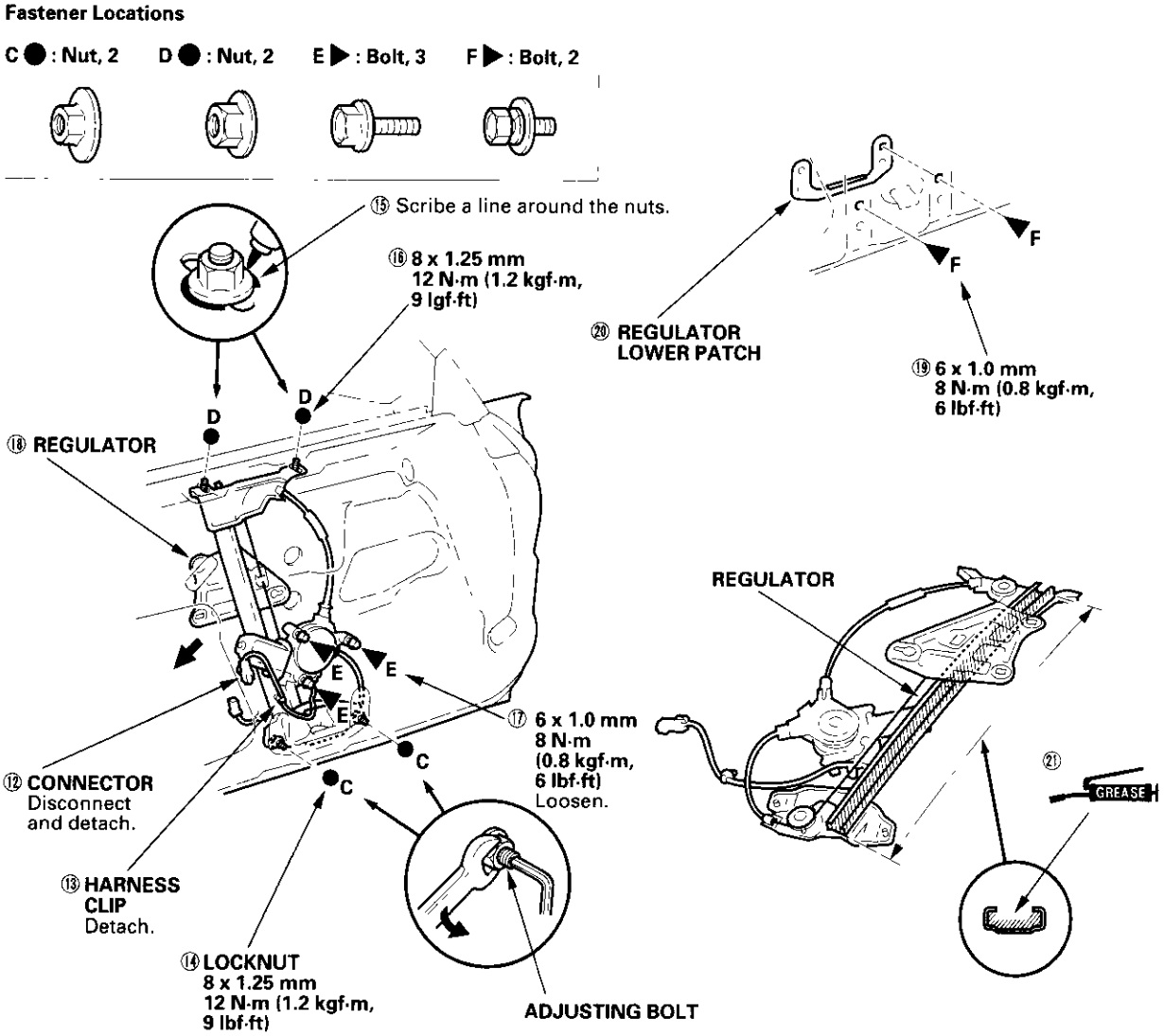


3. Install the glass and regulator in the reverse order of removal, and note these items:

- Hold the adjusting bolts with a hex wrench when installing the locknuts.
- Before installing the regulator, Apply multipurpose grease to all the sliding surfaces of the regulator.
- Make sure the connector is plugged in properly.
- Roll the glass up and down to see if it moves freely without binding.
- Make sure that there is no clearance between the glass and roof weatherstrips when the glass is closed.
- Adjust the position of the glass as necessary (see page 20-11).
- Check for water leaks (see step 17 on page 20-14).
- Test-drive and check for wind noise and rattles.
- When reinstalling the door panel, make sure the plastic cover is installed properly and sealed around its perimeter.

## Door Glass Adjustment

NOTE:
- Check the A-pillar-header weatherstrip, roof weatherstrips and B-pillar weatherstrip for damage or deterioration, and replace them if necessary.
- Wipe each weatherstrip and the front lower channel clean with a shop towel.
- Lubricate the front lower channel with Shin-Etsu grease P/N08798-9013.

1. Place the vehicle on a firm, level surface.

2. Secure the convertible top with both convertible top lock handles.
   Make sure they are locked securely.

3. Lower the glass fully.

4. Remove these items:

   - Door panel (see page 20-4)
   - Plastic cover (see page 20-2)
   - A-pillar-header weatherstrip, pillar portion (see page 20-51)
   - Roof side weatherstrip (see page 20-40)
   - Roof corner weatherstrip (see page 20-35)
   - B-pillar weatherstrip (see page 20-40)

5. Close the door. Check the door fit to the body opening.

6. Raise the glass fully.

7. At the measuring points (A, B, C), measure and record clearances "H" and "B" between the glass (D) and the molding (E) and the glass (D) and the retainer (F). Adjust the clearance as described in steps 9 thru 10.

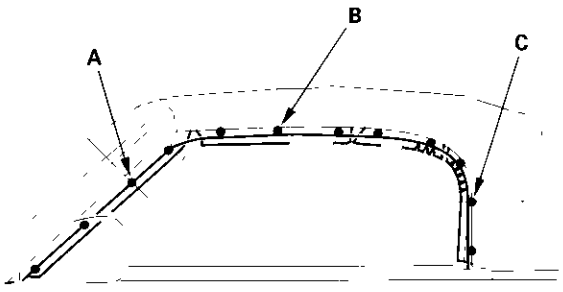


**Measuring Point A**

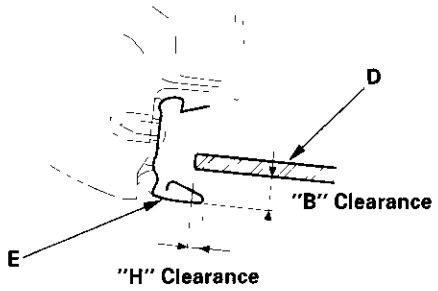


**Measuring Point B**

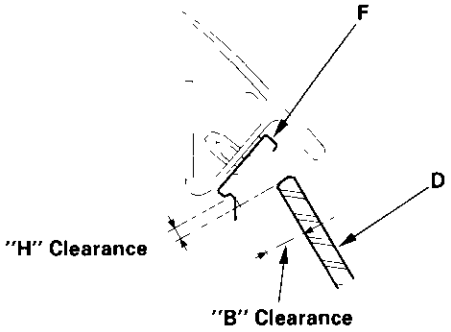


**Measuring Point C**

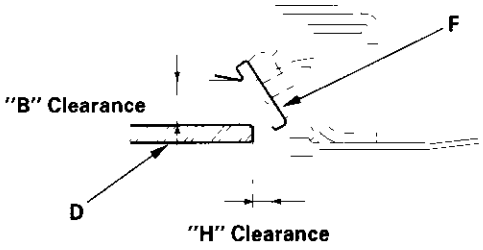


**Clearance (Standard clearance)**

Unit: mm (in.)

| Measuring Point | | A | B | C |
|---|---|---|---|---|
| Clearance | "H" | 4 (0.16) | 3 (0.11) | 8 (0.31) |
| | "B" | 11 (0.43) | 14 (0.55) | 18 (0.71) |

8. Move the door sash holder all the way forward (see page 20-15).

(cont'd)

## Door Glass Adjustment (cont'd)

9. Adjust clearance "H" as follows:

   -1 Loosen the bolts (A) securing the stop plates (B).
   -2 Loosen the bolts (C) securing the glass (D).
   -3 Move the glass up or down, as well as, forward and rearward to align it with the retainer and molding. Move the glass until clearance "H" is within the specified limits.
   -4 Tighten the bolts securing the glass.
   -5 Press the stop plates against the glass stops (E).
   -6 Fasten the stop plates. Check that the stop plates contact the glass stops evenly.

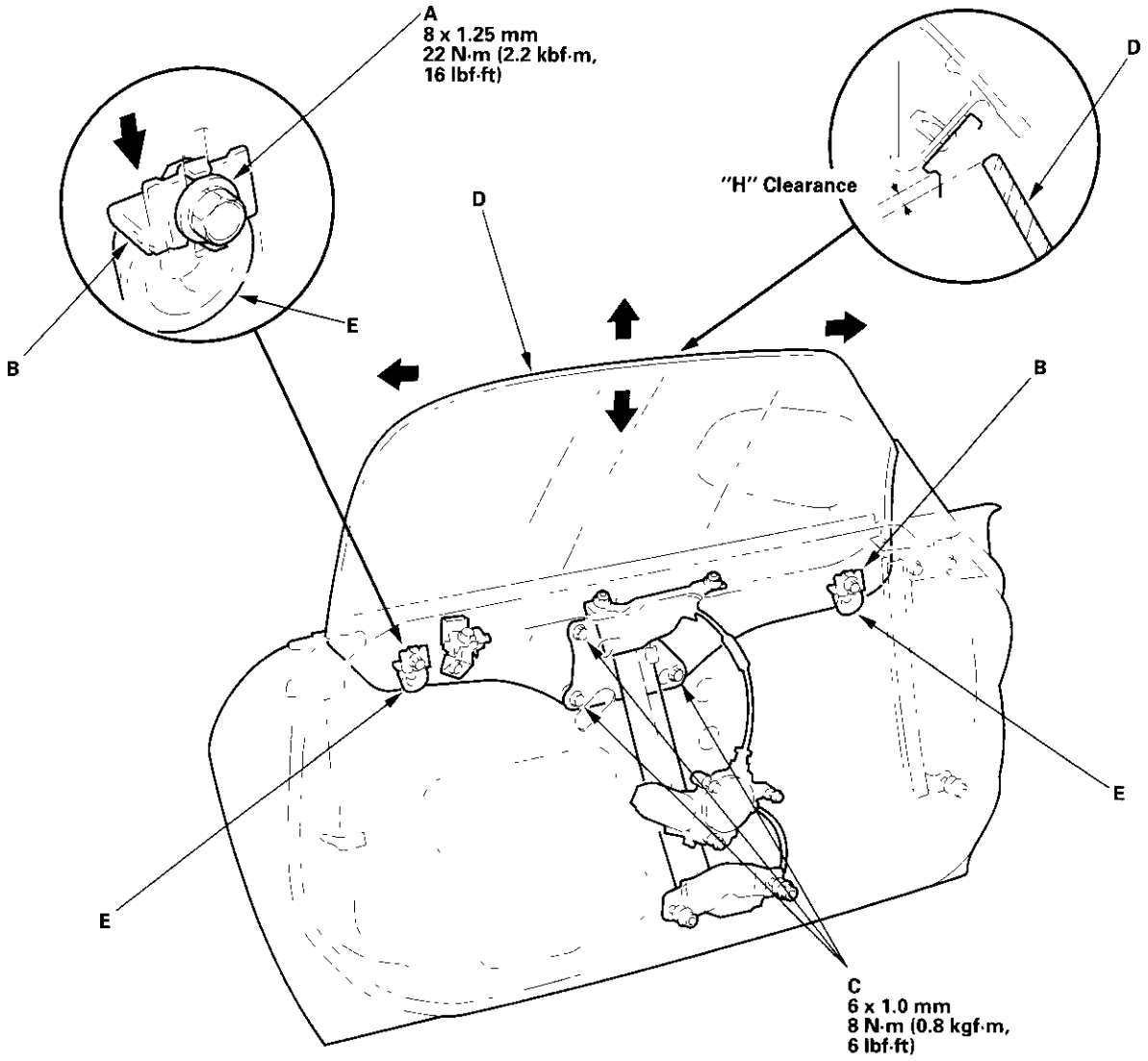

10. Adjust clearance "B" as follows:

–1 Push the glass (A) outward 10 mm (0.39 in.), then lightly push the stabilizer (B) against the glass.
–2 Tighten the bolt (C) securing the stabilizer. Check that the glass moves smoothly.
–3 Loosen the locknuts (D).
–4 Turn the adjusting bolts (E) until the clearance "B" is within the specified limits. Turn the front and rear adjusting bolts the same amount to keep the regulator (F) parallel with the seating surface of the door.
–5 Tighten the locknuts. Make sure that the ends of the adjusting bolts still project out of the locknuts.
–6 Move the glass up and down to seat it, then measure clearance "B" at the designated locations.
–7 Measure clearance "H" again to make sure it is still within the specified limits at the designated locations. Repeat the above steps until the correct clearance are obtained.

| Adjusting Bolt | Top Edge of Glass |
|---|---|
| Clockwise | ➡ Moved out |
| Counter-clockwise | ⇨ Moved in |

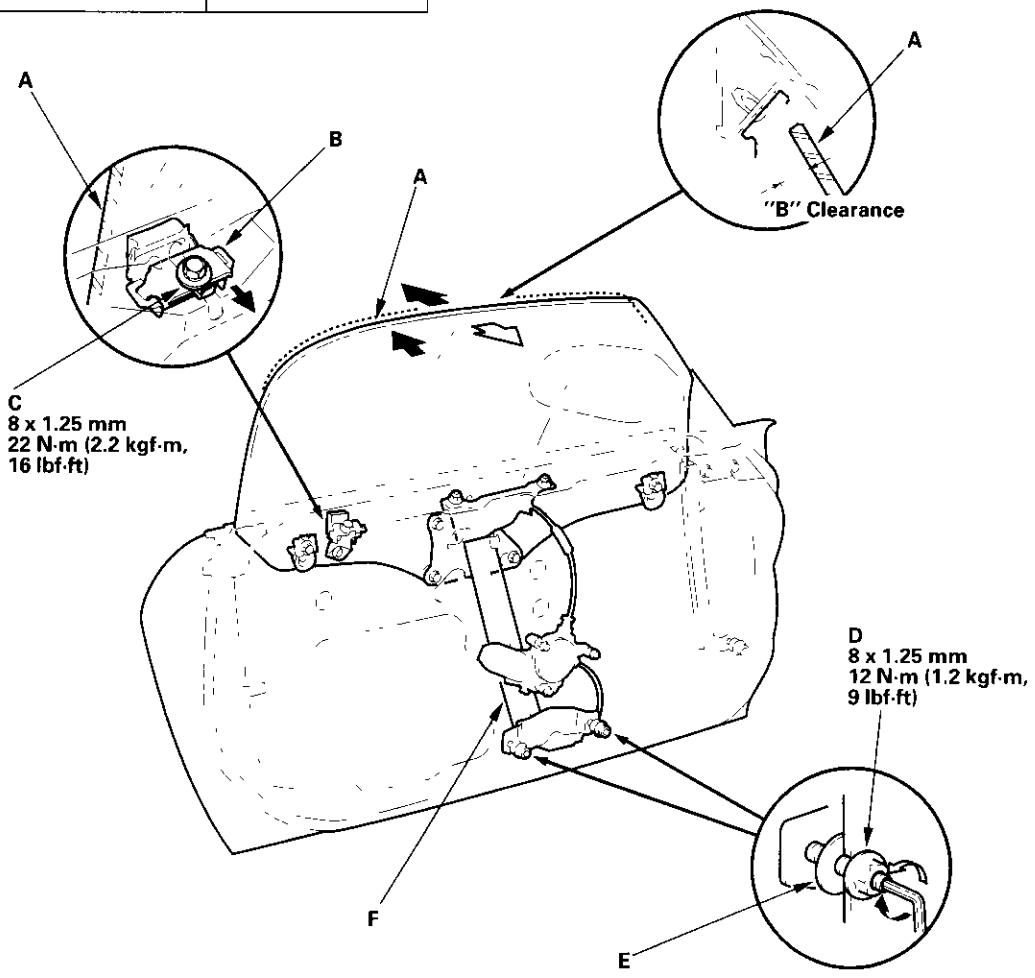


(cont'd)

## Door Glass Adjustment (cont'd)

11. Align the door sash holder with the glass using the adjusting bolt at the bottom of the door sash holder (see page 20-16).

12. After the clearances have been adjusted properly, reinstall each weatherstrip.

13. Check that the glass moves smoothly.

14. Raise the glass (A) fully, and check that the glass contacts each weatherstrip (B) evenly. Measuring points are described at step 7.

**Front roof pillar :**

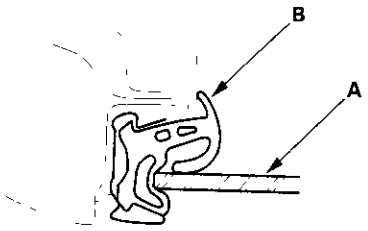


**Roof :**

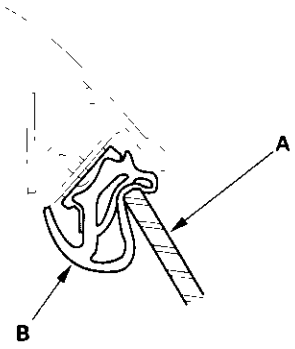


**Center pillar :**

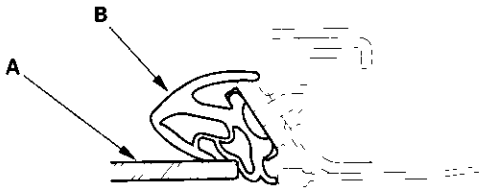


15. Attach the plastic cover, and install the door panel (see page 20-4).

16. Make sure that the top is locked securely, then raise the glass fully, and close the doors.

17. Check for water leaks. Run water over the roof and on the sealing area as shown, and note these items:

    - Use a 12 mm (1/2 in.) diameter hose (A).
    - Adjust the rate of water flow (B).
    - Do not use a nozzle.
    - Hold the hose about 300 mm (12 in.) away from the door.

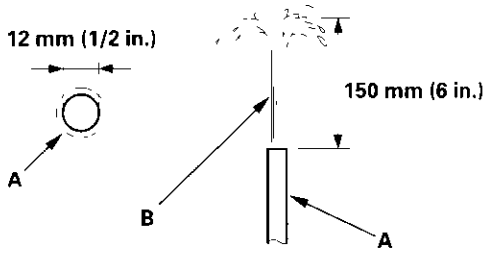


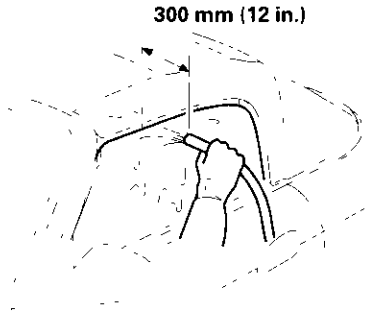


18. If there are leaks, recheck the work performed, and check the door glass, weatherstrip, A-pillar molding, and retainer adjustment.

19. Test-drive and check for wind noise.

# Door Sash Holder Replacement

NOTE:
- Put on gloves to protect your hands.
- Take care not to scratch the door.

1. Remove these items:

   - Door glass (see page 20-8)
   - Door weatherstrip, as necessary (see page 20-17)

2. Remove the door sash holder in numbered sequence:

   - Hold the adjusting bolt with a hex wrench when removing the locknut.
   - Scribe a line around the locknut to show the original adjustment.

3. Install the holder in the reverse order of removal, and note these items:

   - Adjust the position of the door sash holder (see page 20-16).
   - Check for water leaks (see step 17 on page 20-14).
   - Test-drive and check for wind noise and rattles.
   - When reinstalling the door panel, make sure the plastic cover is installed properly and sealed around its perimeter.

**Fastener Locations**

A ▶ : Screw, 4  B ▶ : Bolt, 2  C ●: Nut, 1

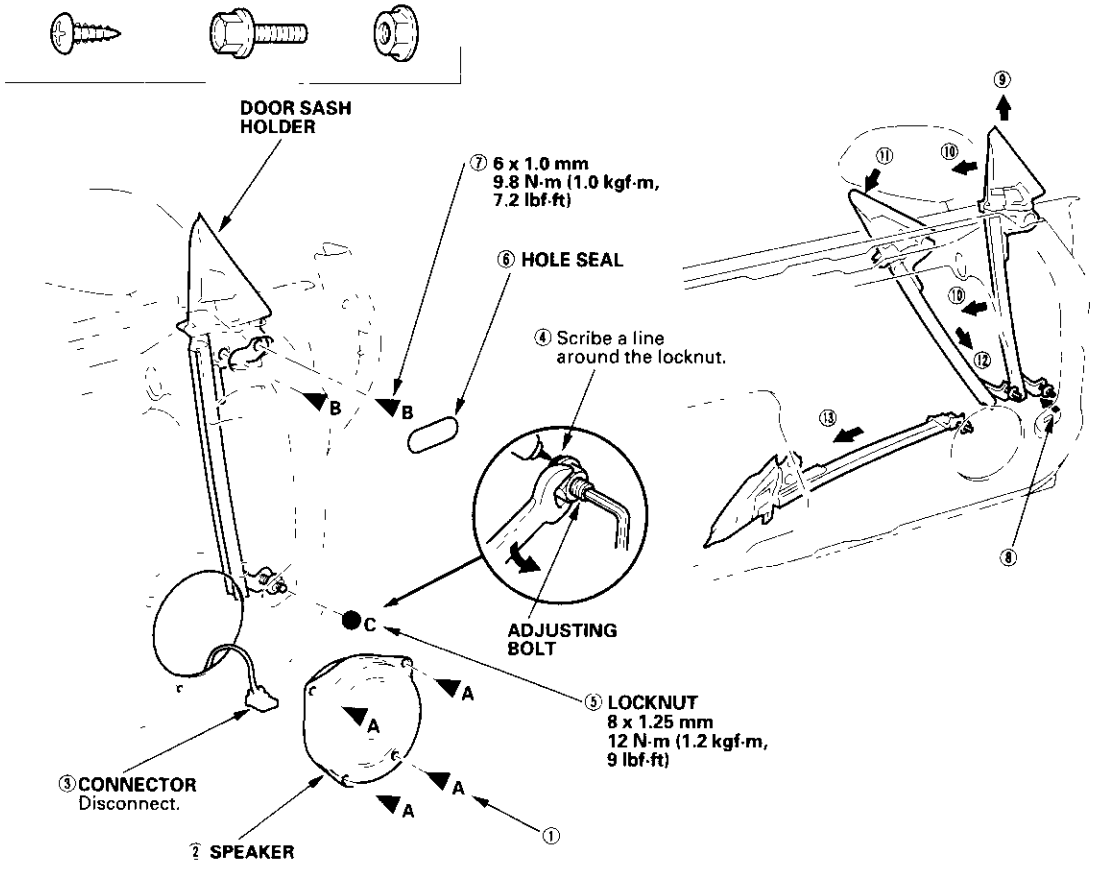

## Door Sash Holder Adjustment

1. Raise the glass fully.
2. Loosen the locknut (A) while holding the adjusting bolt (B) with a hex wrench.

| Adjusting Bolt | Top Edge of Holder |
|---|---|
| Clockwise | ➡ Moved out |
| Counterclockwise | ⇨ Moved in |

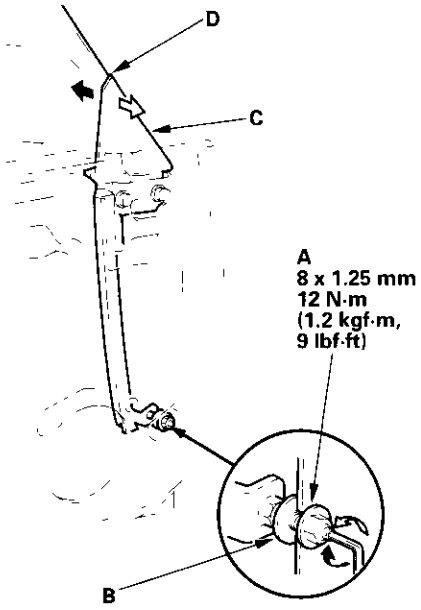


3. Align the door sash holder (C) with the glass using the adjusting bolt at the bottom of the door sash holder. Make sure that there is no clearance between the end of channel (D) and glass surface.
4. Tighten the locknut securely.
5. Reinstall all remaining removed parts.
6. Check for water leaks (see step 17 on page 20-14).
7. Test-drive and check for wind noise and rattles.

## Door Glass Outer Weatherstrip Replacement

NOTE:
- Put on gloves to protect your hands.
- Take care not to scratch the door and door molding.

1. Remove the door sash holder (see page 20-15).
2. Starting at the rear, pry the outer weatherstrip (A) up, and detach the clips (B, C).

**Fastener Locations**

**B ▷ : Clip, 1  C ▷ : Clip, 6**

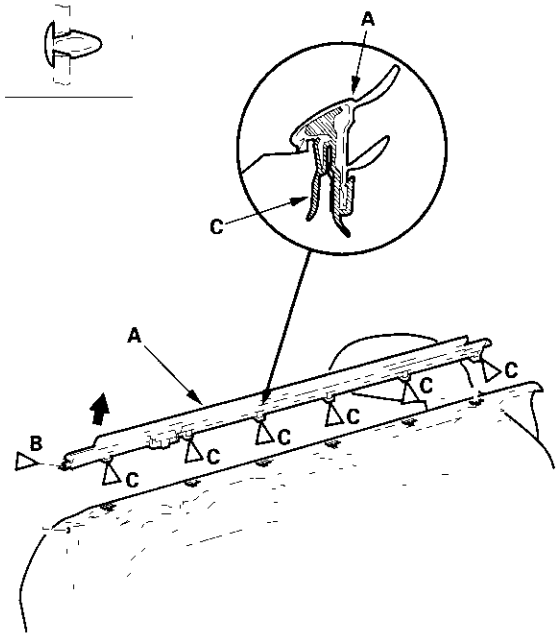


3. Install the weatherstrip in the reverse order of removal, and replace any damaged clips.

## Door Weatherstrip Replacement

NOTE:
- Take care not to scratch the door.
- Use a clip remover, to remove the clips.

1. Remove the door panel (see page 20-4).
2. Remove the door weatherstrip as shown.
3. Install the weatherstrip in the reverse order of removal, and note these items:
   - Replace any damaged clips.
   - If the old weatherstrip is to be reinstalled, scrape off all traces of old EPT sealer and butyl tape, then clean the weatherstrip surface with alcohol.
   - Glue the new weatherstrip into place using EPT sealer and butyl tape.

**Fastener Locations**

**A ▶ : Screw, 2  B ▷ : Clip, 2  C ▷ : Clip, 17**

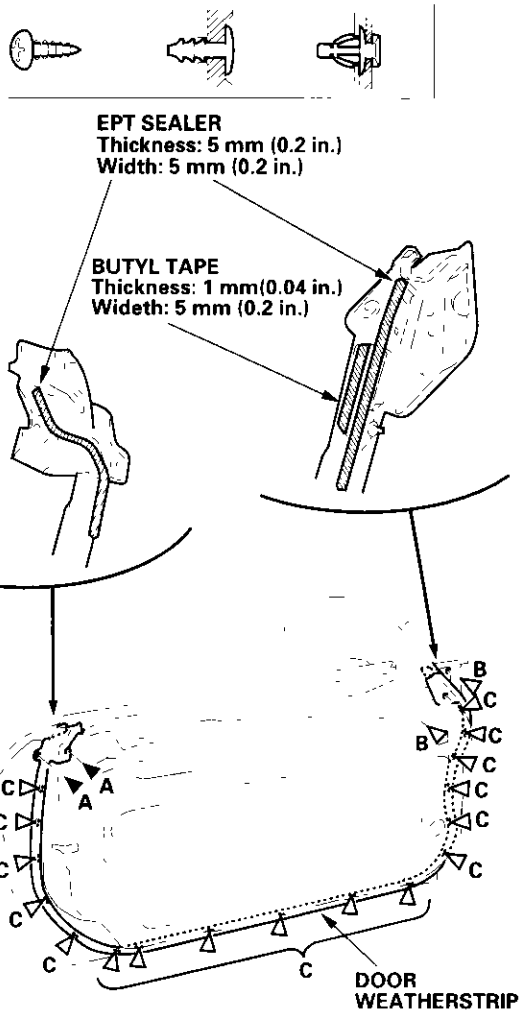


## Door Wedge and Door Wedge Holder Replacement

NOTE: Take care not to scratch the door and body.

1. Remove the door wedge and the door wedge holder as shown.
2. Install the wedge and wedge holder in the reverse order of removal, and when installing the door wedge holder, adjust it up or down until the door wedge is centered in the holder.

**Fastener Locations**

**A ▶ : Screw, 2  B ▶ : Screw, 2**

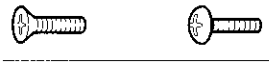

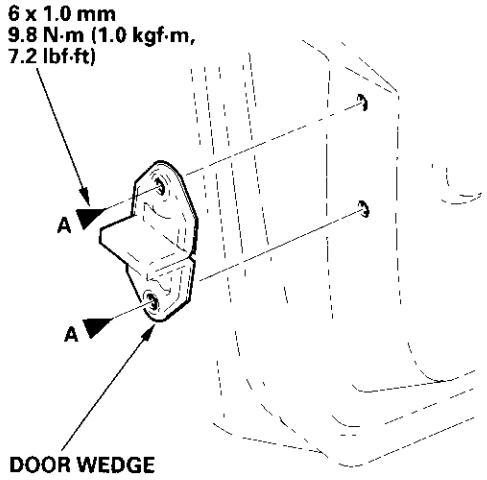


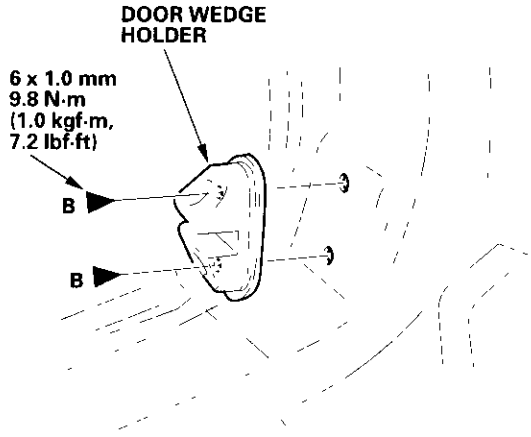

## Door Position and Door Striker Adjustment

NOTE:
- After installing the door, check for a flush fit with the body, then check for equal gaps between the front, rear, and bottom door edges and the body. Check that the door and body edges are parallel.
- Place the vehicle on a firm, level surface when adjusting the door.
- Place a shop towel on the jack to prevent damage to the door when holding the door.

1. Remove the door wedge holder (A) (see page 20-17).

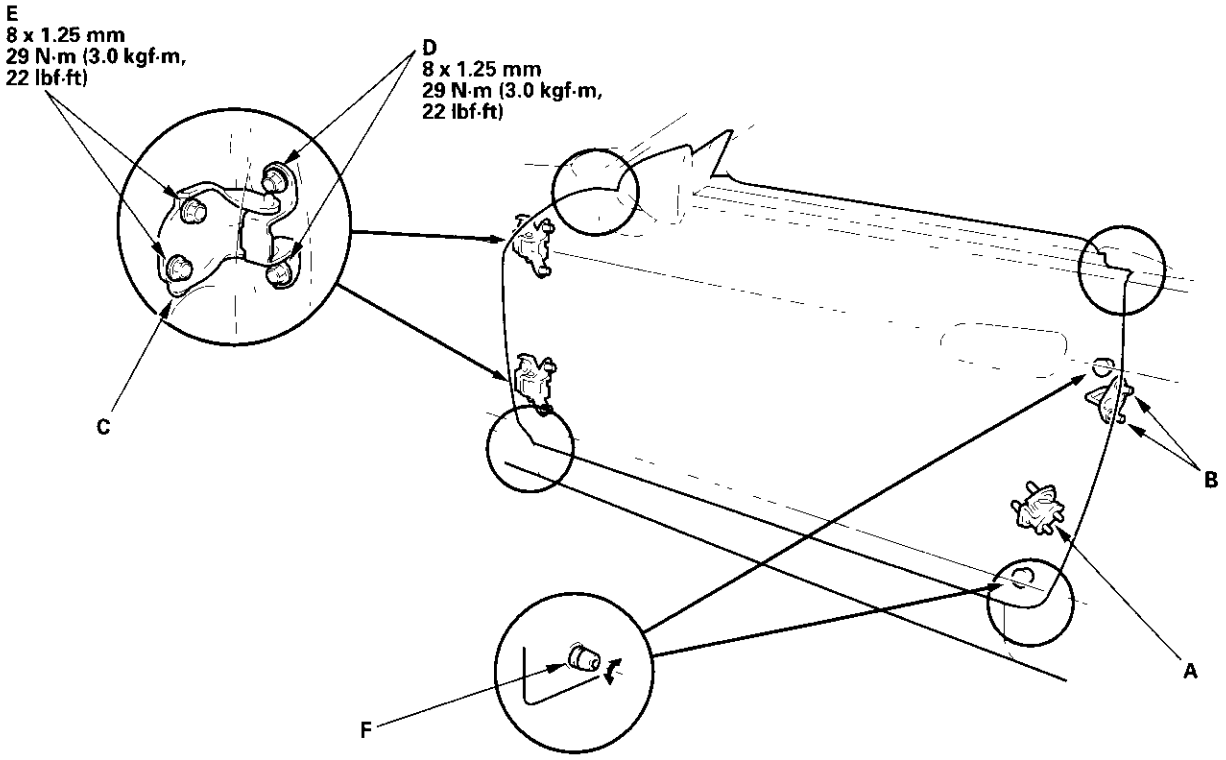


2. Slightly loosen the striker mounting screws (B).

3. Adjust the door alignment in this sequence:

   - Adjust at the hinges (C):
     - Loosen the door mounting bolts (D) slightly, and move the door in or out until it's flush with the body.
     - Remove the inner fender (see page 20-105), then slightly loosen the hinge mounting bolts (E), and move the door backward or forward, up or down as necessary to equalize the gaps.
   - Turn the door cushions (F), as necessary, to make the rear of the door flush with the body.

4. Make sure the door and body edges are parallel, and the door is flush with the body. Tighten the door and hinge mounting bolts, and recheck.

5. Adjust the striker (A):

   - Move the striker In or Out to make the latch fit tighter or looser.
   - Move the striker Up or Down to align it with the latch opening.

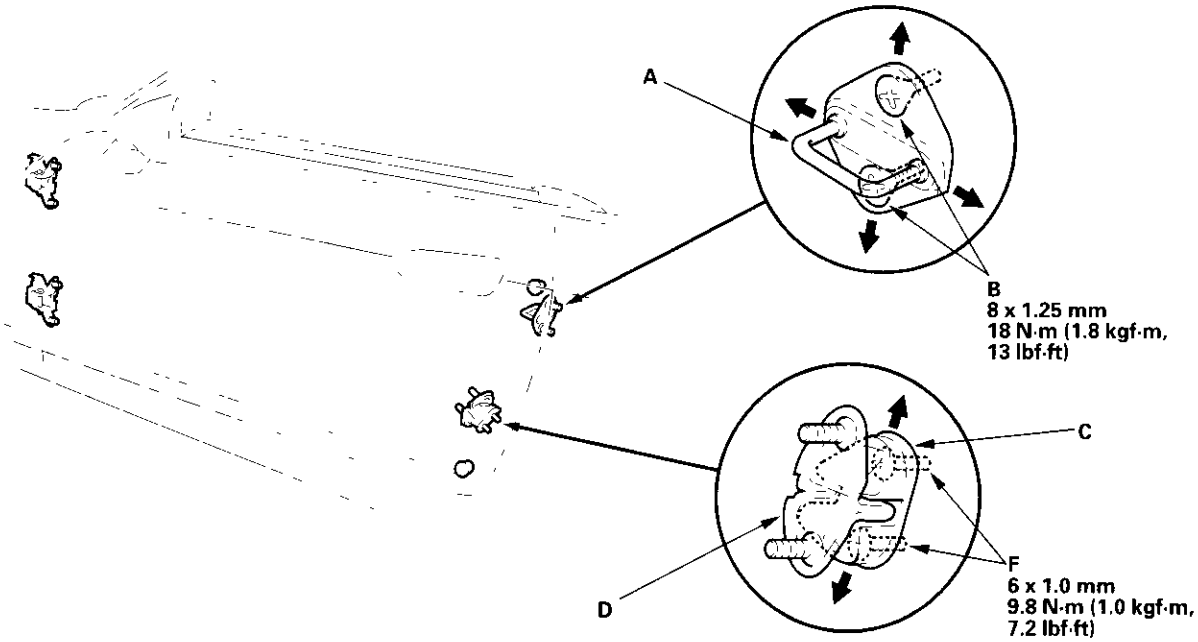


6. Make sure the door latches properly. Tighten the screws (B), and recheck.

7. Align the door wedge holder (C) up or down until the door wedge (D) is centered in the holder. Tighten the screws (F), and recheck.

8. Apply multipurpose grease to the pivot portions of the hinges (A) indicated by the arrows.

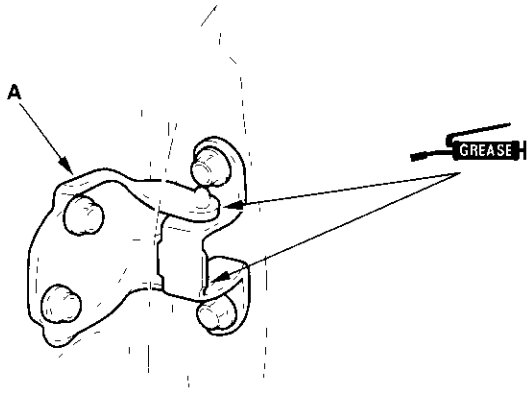


9. Apply body paint to the hinge and door mounting bolts, and around the hinges.

10. Check for water leaks (see step 17 on page 20-14).

11. Test-drive and check for wind noise.

## Component Location Index

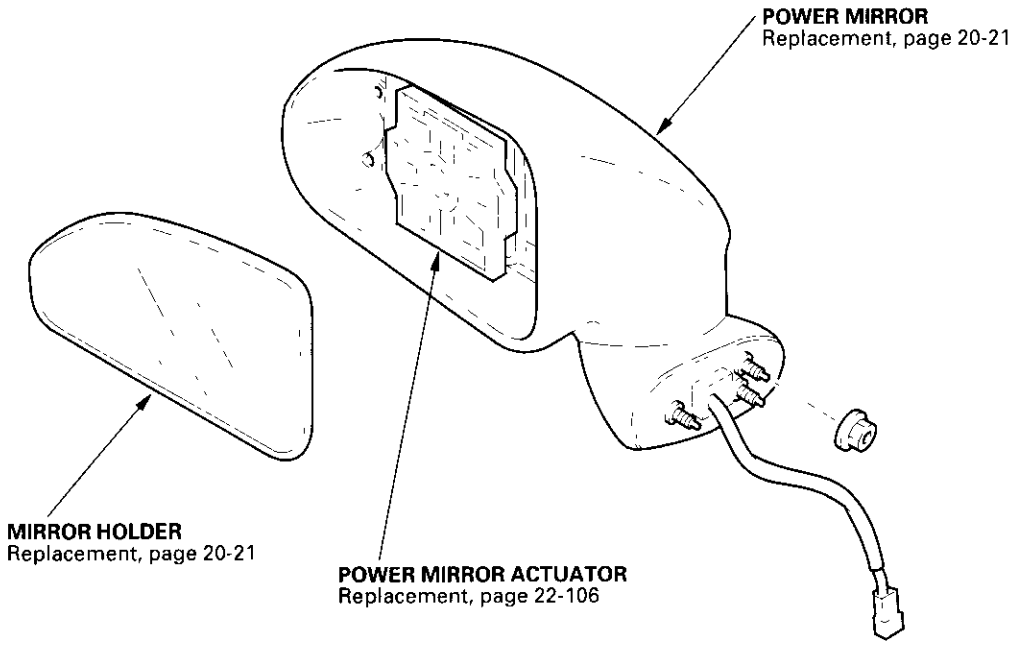


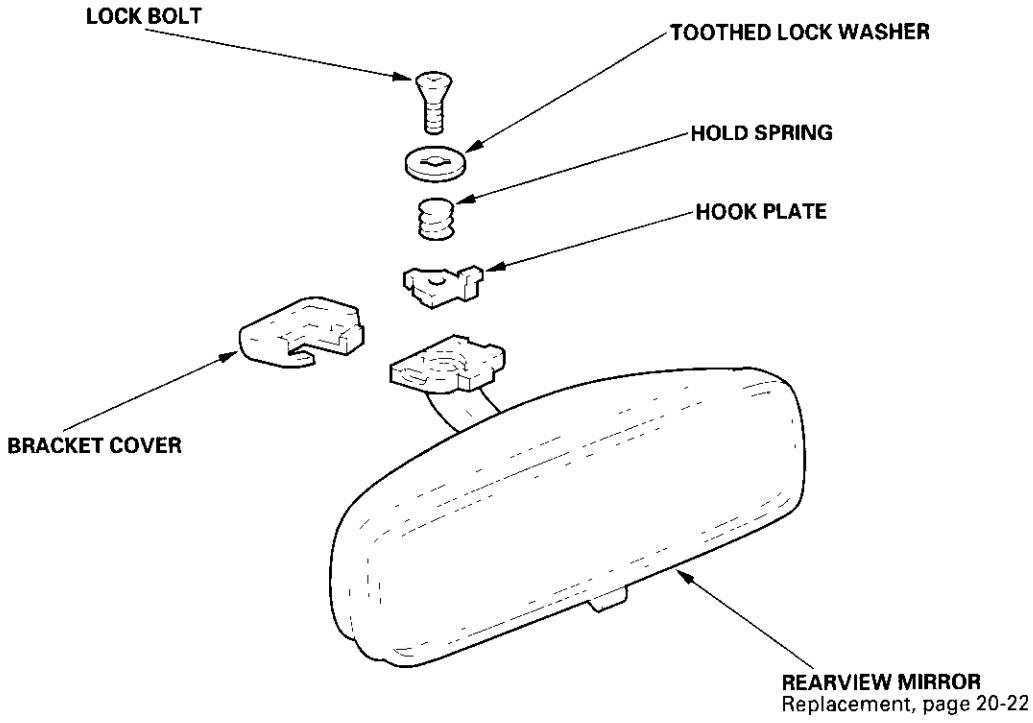

## Power Mirror Replacement

NOTE: To avoid scratching the door, be sure to hold the mirror while removing or installing the nuts.

1. Remove these items:
   - Door sash holder (see page 20-15)
   - Plastic cover, as necessary (see page 20-2)
2. Disconnect the connector (A), and detach it from the door.

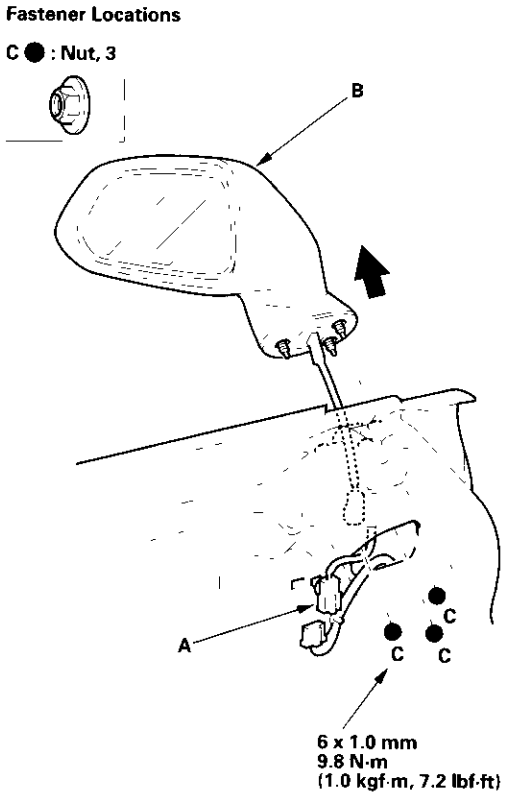


3. Support the mirror (B) with one hand, remove the nuts (C), then remove the mirror.
4. Install the mirror in the reverse order of removal, and note these items:
   - Make sure the connector is plugged in properly.
   - Adjust the position of the door sash holder (see page 20-16).
   - Check for water leaks (see step 17 on page 20-14).
   - Test-drive and check for wind noise and rattles.
   - When reinstalling the door panel, make sure the plastic cover is installed properly and sealed around its perimeter.

## Mirror Holder Replacement

NOTE: Put on gloves to protect your hands.

1. Carefully pull out the bottom edge of the mirror holder (A) by hand. Take care not to scratch the mirror.

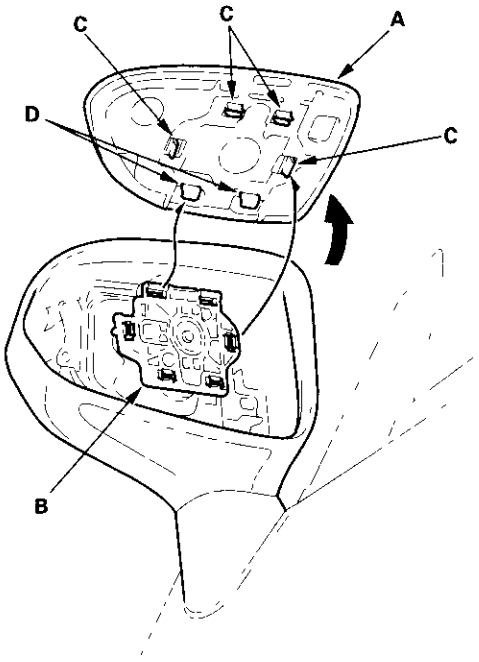


2. Separate the mirror holder from the actuator (B) by slowly pulling them apart while detaching the clips (C) and releasing the hooks (D).
3. Reattach the hooks of the mirror holder to the actuator, then position the mirror holder on the actuator. Carefully push on the clip portions of the mirror holder until the mirror holder locks into place.
4. Check the actuator operation.

## Rearview Mirror Replacement

NOTE:
- Take care not to scratch the cover and mirror stay.
- When prying with a flat-tip screwdriver, wrap it with protective tape to prevent damage.

1. Remove the rearview mirror as shown.

2. Install the mirror in the reverse order of removal.

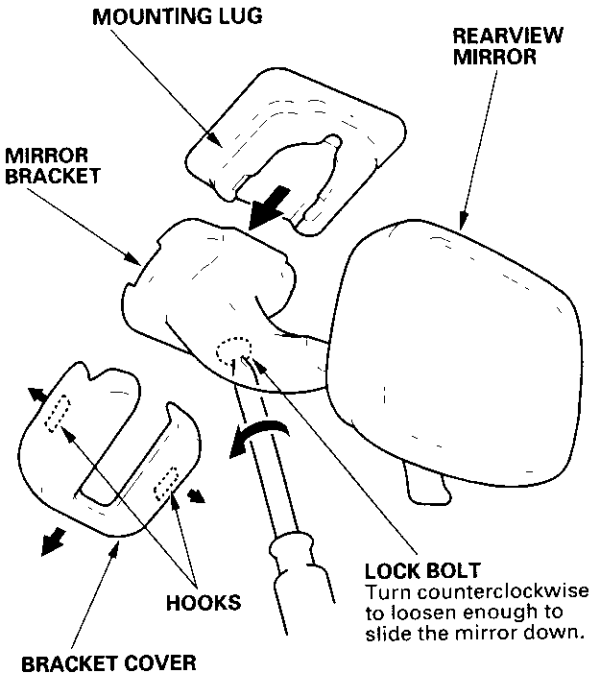

## Component Location Index

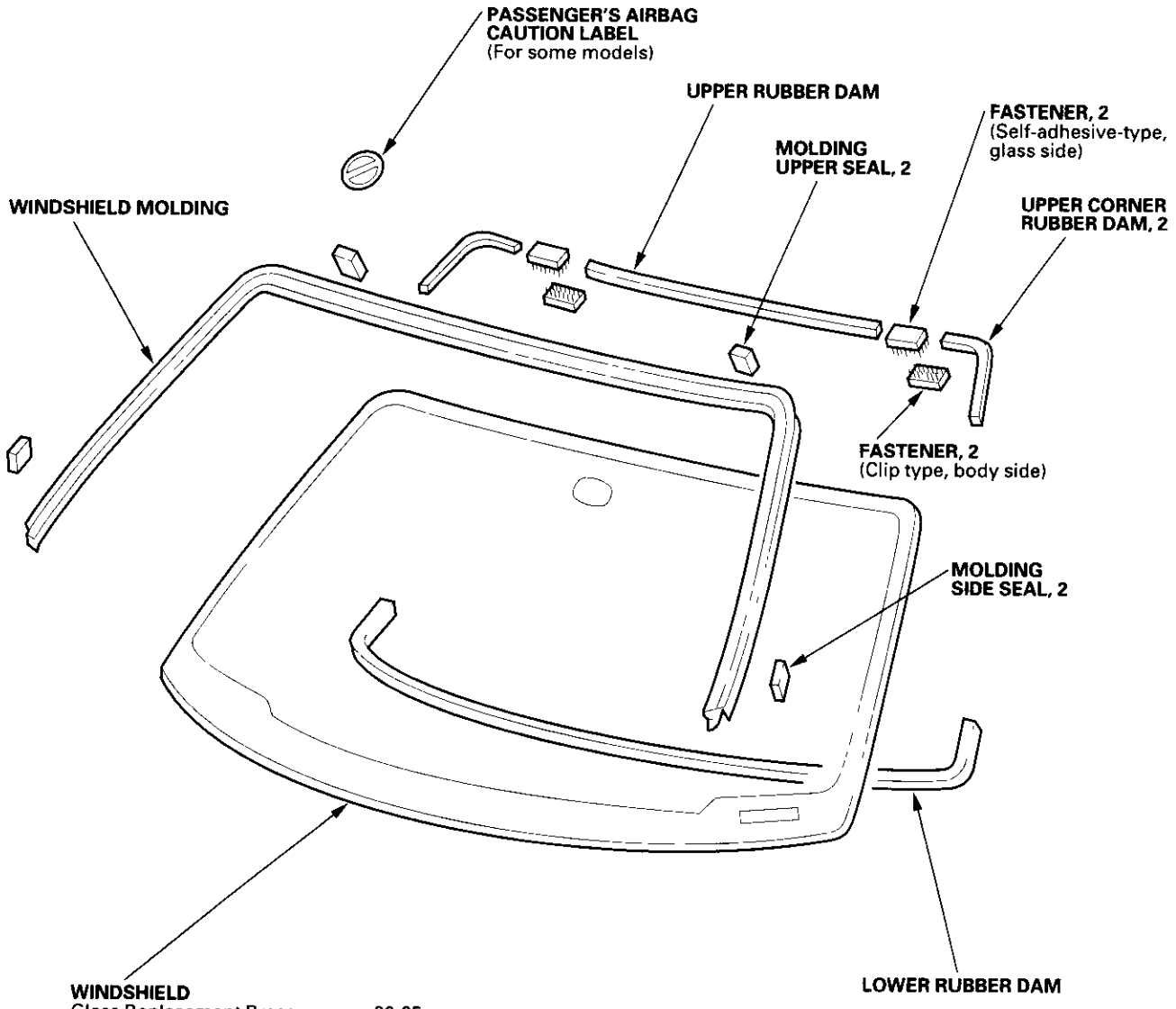

## Component Location Index (cont'd)

**Removable Hardtop**

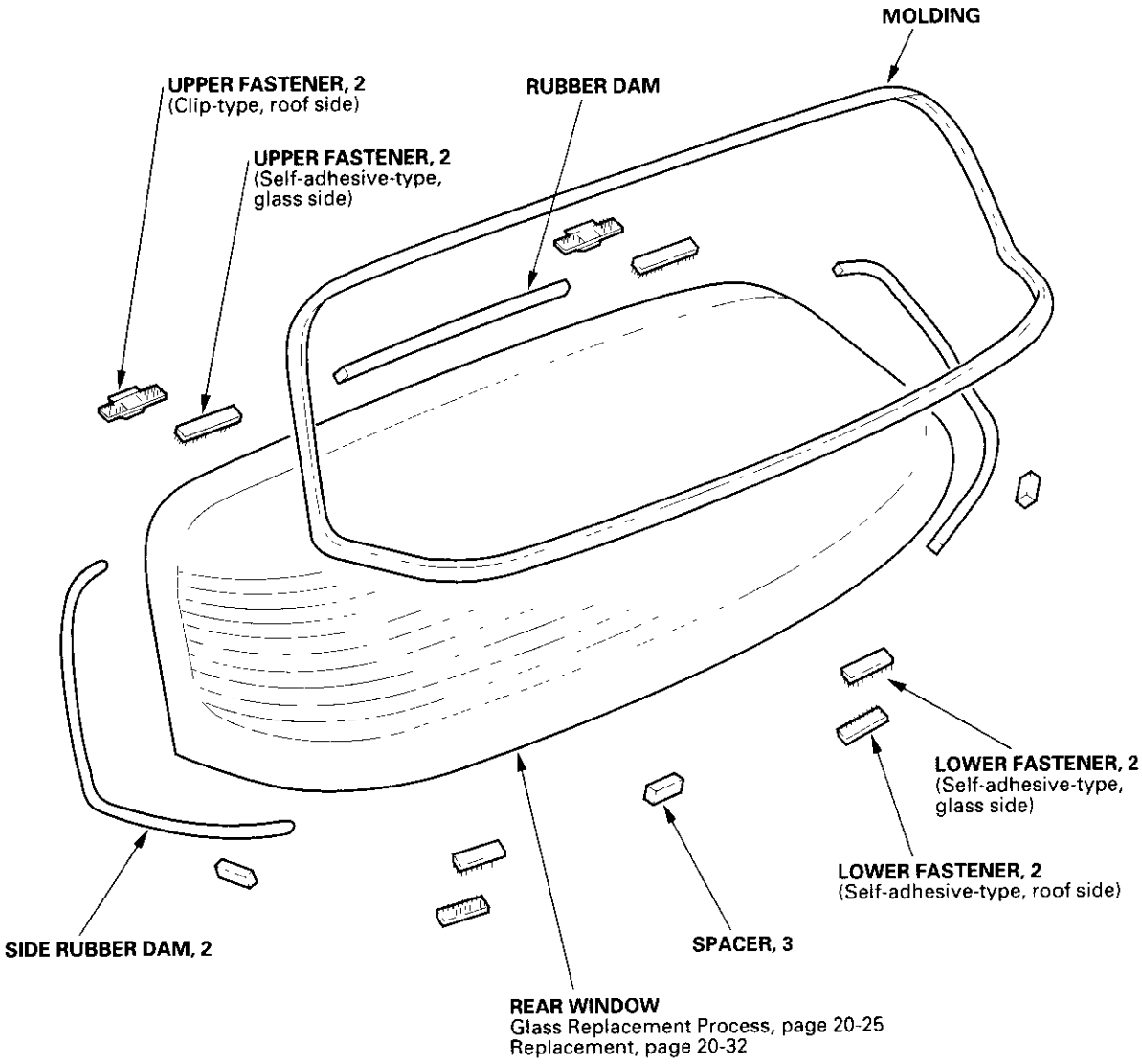

## Glass Replacement Process

NOTE:
- This procedure is a general description of the glass replacement process. For details about fastener and rubber dam locations, windshield (see page 20-29), rear window (see page 20-32).
- Put on gloves to protect your hands.
- Wear eye protection while cutting the glass adhesive with piano wire.
- Use seat covers to avoid damaging any surfaces.

1. To remove the glass, first remove the related parts, windshield (see page 20-29), rear window (see page 20-32).

2. Disconnect the connectors from the glass terminals.

3. Remove the molding (A) from the edge of the glass (B). If necessary, cut the molding with a utility knife.

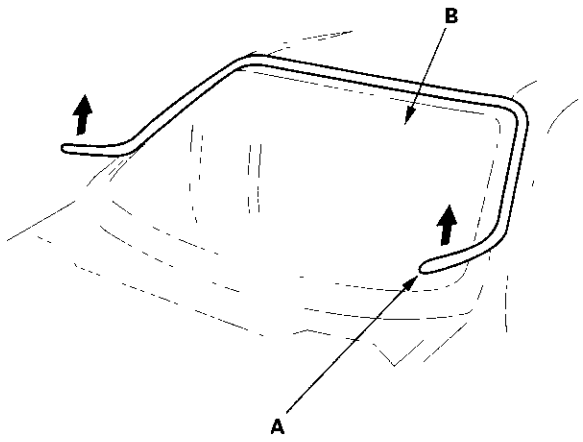


4. If the old glass is to be reinstalled, make alignment marks across the glass and body with a grease pencil at the four points.

5. Apply protective tape along the edge of the body and the related parts.

6. Using an awl, make a hole through the adhesive from inside the vehicle at the corner portion of the glass, windshield (see page 20-29), rear window (see page 20-32).

7. Push a piece of piano wire through the hole, and wrap each end around a piece of wood.

8. With a helper on the outside, pull the piano wire (A) back and forth in a sawing motion. Hold the piano wire as close to the windshield as possible to prevent damage to the body and dashboard. Carefully cut through the rubber dam and adhesive around the entire windshield.

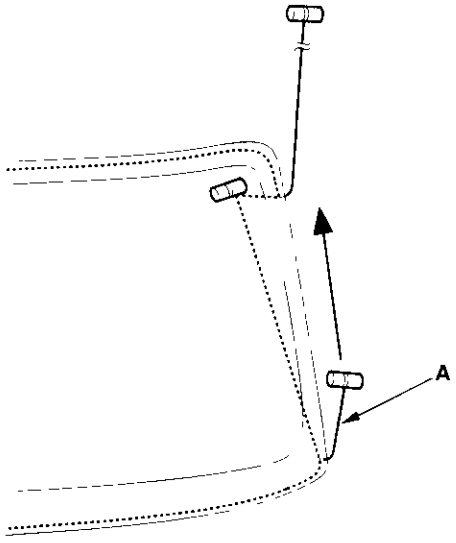


(cont'd)

## Glass Replacement Process (cont'd)

9. Carefully remove the glass.

10. With a knife, scrape the old adhesive smooth to a thickness of about 2 mm (0.08 in.) on the bonding surface around the entire glass opening flange:

    - Do not scrape down to the painted surface of the body; damaged paint will interfere with proper bonding.
    - Remove any remaining parts from the body.

11. Clean the body bonding surface with a sponge dampened in alcohol. After cleaning, keep oil, grease and water from getting on the clean surface.

12. If the old glass is to be reinstalled, use a putty knife to scrape off all of the old adhesive and any remaining parts from the glass. Clean the inside face of the glass with alcohol where new adhesive is to be applied. Make sure the bonding surface is kept free of water, oil and grease.

13. Glue the rubber dam (A), fastener (B), and other parts to the inside face of the glass (C), windshield (see page 20-29), rear window (see page 20-32). Be careful not to touch the glass where adhesive will be applied.

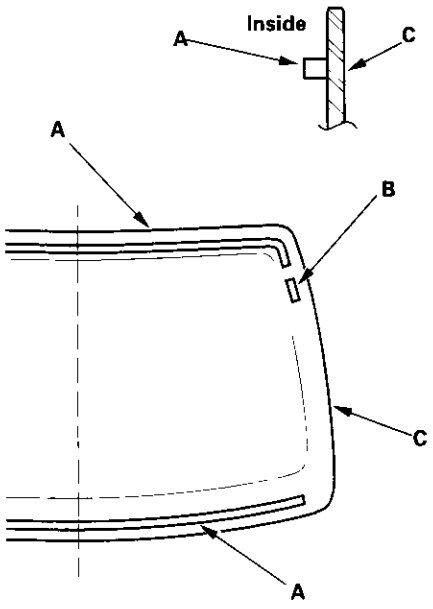


14. Glue the molding (A) with adhesive tape (B) to the edge of the glass (C), windshield (see page 20-29), rear window (see page 20-32). Be careful not to touch the glass where adhesive will be applied.

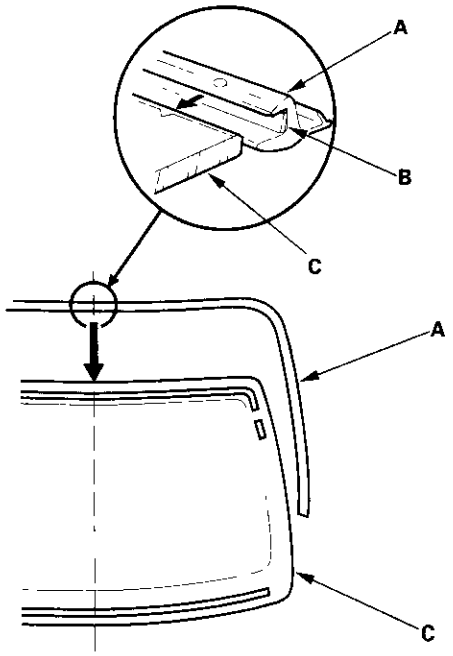


15. Install the fastener (A) to the body, windshield (see page 20-29), rear window (see page 20-32).

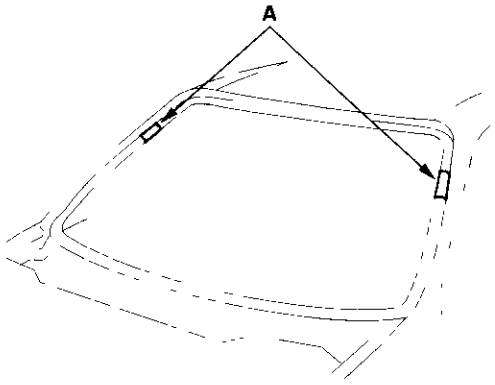

16. If the new glass is to be installed, set the glass (A) in the opening, and center it. Make alignment marks (B) across the glass and body with a grease pencil at the four points shown. Be careful not to touch the glass where adhesive will be applied.

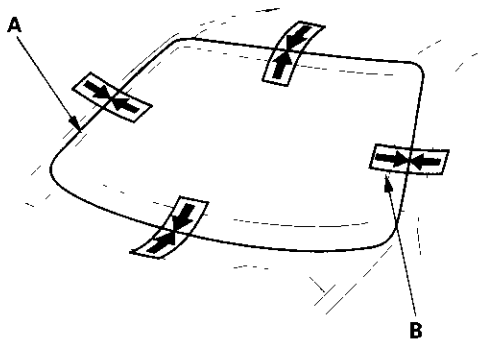


17. Remove the glass.

18. With a sponge, apply a light coat of glass primer around the edge of the glass (A) between the rubber dam (B) and molding (C) as shown, then lightly wipe it off with gauze or cheesecloth, windshield (see page 20-29), rear window (see page 20-32).

    - Apply glass primer to the molding.
    - Do not apply body primer to the glass, and do not get body and glass primer sponges mixed up.
    - Never touch the primed surfaces with your hands. If you do, the adhesive may not bond to the glass properly, causing a leak after the glass is installed.
    - Keep water, dust, and abrasive materials away from the primed surface.

    : **Apply glass primer here.**

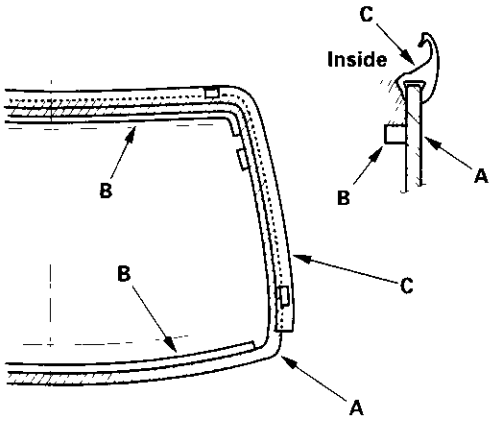


19. With a sponge, apply a light coat of body primer to the original adhesive remaining around the windshield opening flange, windshield (see page 20-29), rear window (see page 20-32). Let the body primer dry for at least 10 minutes.

    - Do not apply glass primer to the body, and be careful not to mix up glass and body primer sponges.
    - Never touch the primed surfaces with your hands.
    - Mask off the interior parts before painting the flange.

    : **Apply body primer here.**

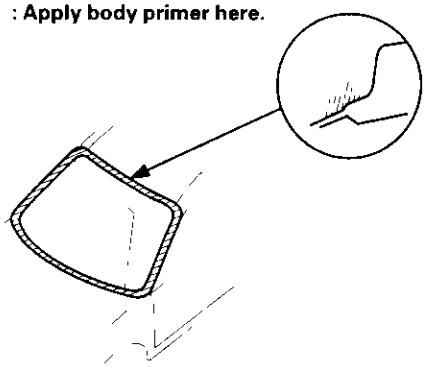

20. Before filling a cartridge, cut a "V" in the end of the nozzle (A) as shown.

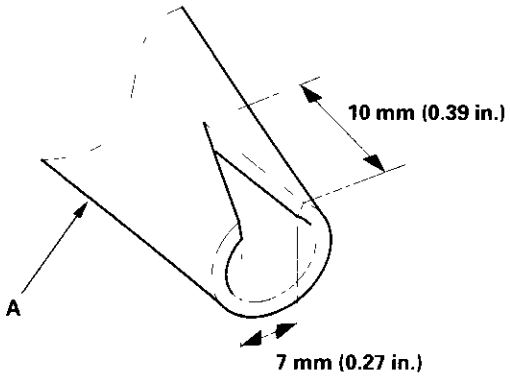


(cont'd)

## Glass Replacement Process (cont'd)

21. Pack adhesive into the cartridge without air pockets to ensure continuous delivery. Put the cartridge in a caulking gun, and run a bead of adhesive (A) around the edge of the glass (B) between the rubber dam (C) and molding (D) as shown, windshield (see page 20-29), rear window (see page 20-32). Apply the adhesive within 30 minutes after applying the glass primer. Make a slightly thicker bead at each corner.

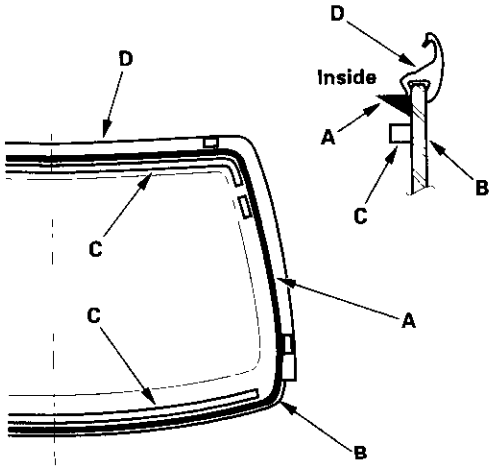


22. Use suction cups to hold the glass over the opening, align it with the alignment marks made in step 3 or 16, and set it down on the adhesive. Lightly push on the glass until its edges are fully seated on the adhesive all the way around. Do not open or close the doors until the adhesive is dry.

23. Scrape or wipe the excess adhesive off with a putty knife or towel. To remove adhesive from a painted surface or the glass, wipe with a soft shop towel dampened with alcohol.

24. Let the adhesive dry for at least 1 hour, then spray water over the glass and check for leaks. Mark leaking areas, and let the glass dry, then seal with sealant:

    - Let the vehicle stand for at least 4 hours after glass installation. If the vehicle has to be used within the first 4 hours, it must be driven slowly.
    - Keep the glass dry for the first hour after installation.

25. Reinstall all remaining removed parts. Install the rearview mirror after the adhesive has dried thoroughly (windshield).

    NOTE: Advise the customer not to do the following things for 2 to 3 days:

    - Slam the doors with all the windows rolled up.
    - Twist the body excessively (such as when going in and out of driveways at an angle or driving over rough, uneven roads).

# Windshield Replacement

NOTE: Familiarize yourself with the glass replacement process (see page 20-25).

## Parts Removal

First remove these items:

- Rearview mirror (see page 20-22)
- Front roof rail trim (see page 20-68)
- Windshield wiper arms (see page 22-114)
- Cowl cover (see page 20-101)

## Cutting Positions

Slip the piano wire through the adhesive at each position as shown, and pull back the piano wire in direction indicated by arrow.

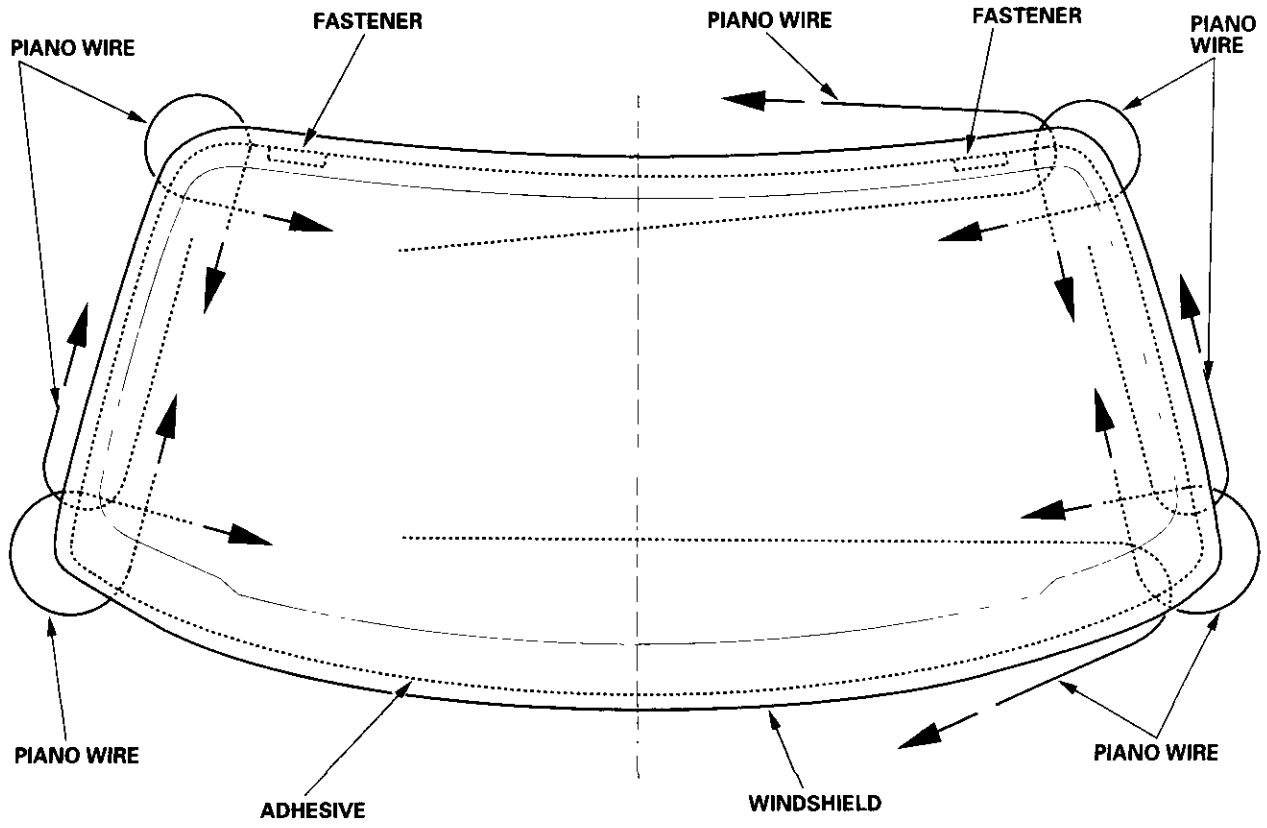


(cont'd)

## Windshield Replacement (cont'd)

### Rubber Dams and Fastener Installation, and Primer Application

- Be sure the rubber dams and fasteners line up with the alignment marks.
- Glue the rubber dams with adhesive tape (NITTO 501M, or equivalent), and glue the fastener with adhesive tape (3M 4215, or equivalent).
- To glue the molding, apply primer (3M N-200, or equivalent) to the areas between the alignment marks of the windshield.

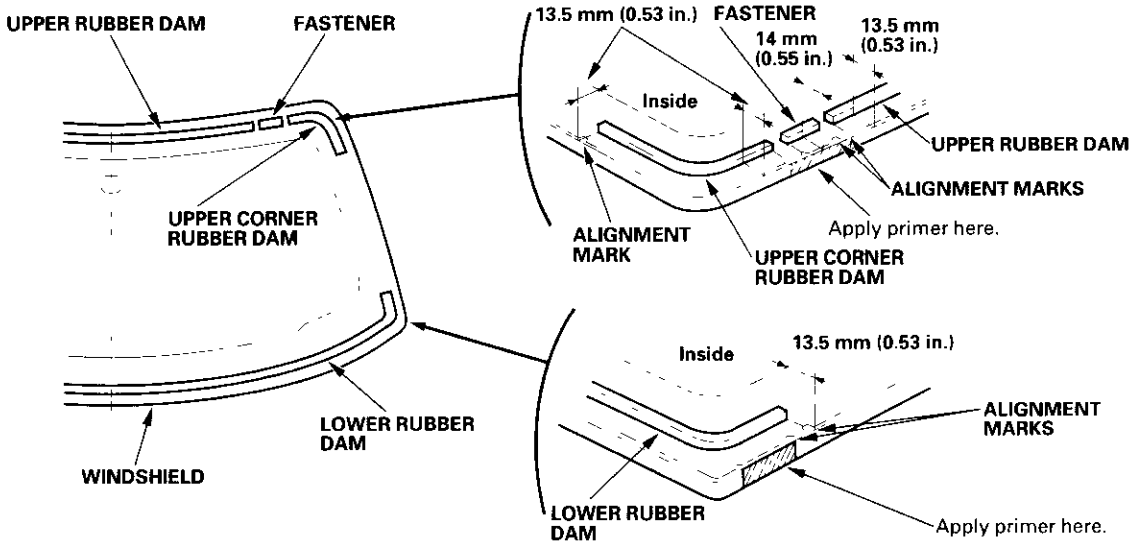


### Molding Installation

- Be sure the alignment mark of the molding line up with the alignment mark of the windshield.
- Glue the molding with adhesive tape (3M 4212, or equivalent).
- Glue the molding seals to the molding.

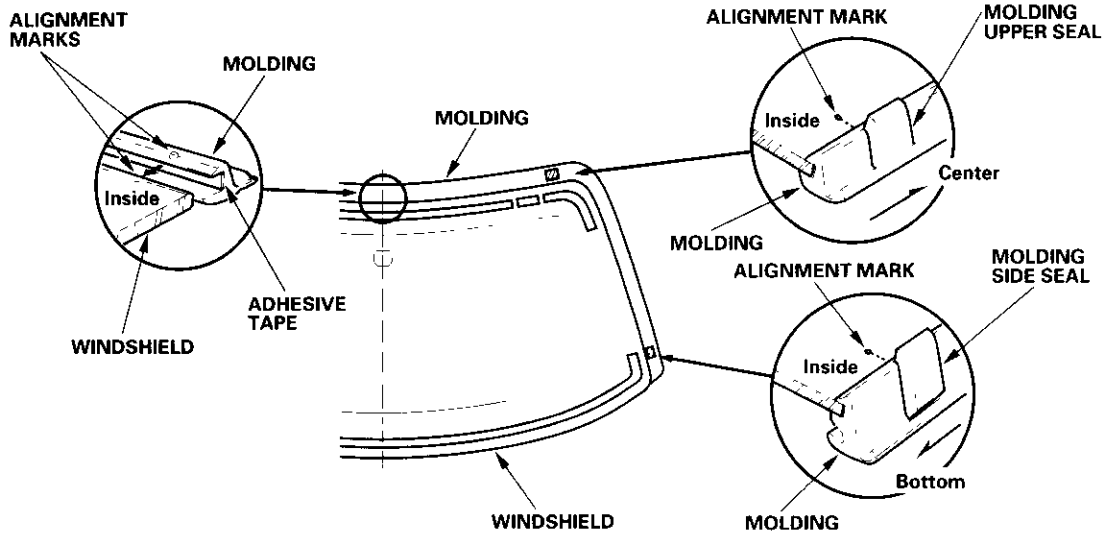

## Fastener (body side) Installation/Body Primer Application

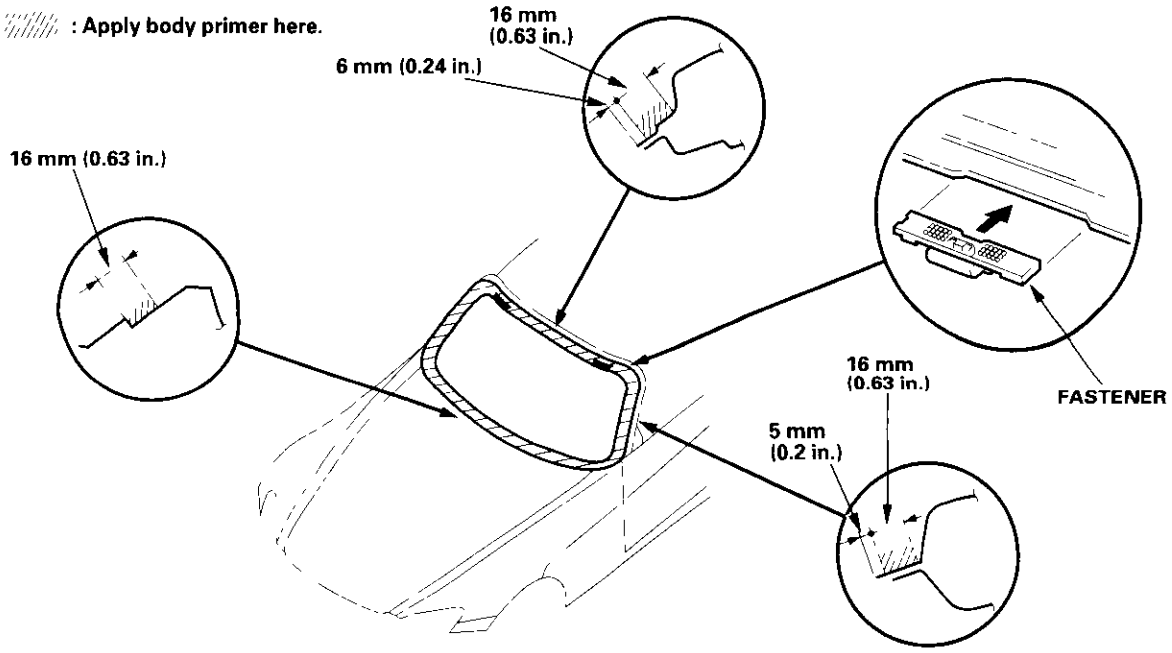


## Glass Primer and Adhesive Application

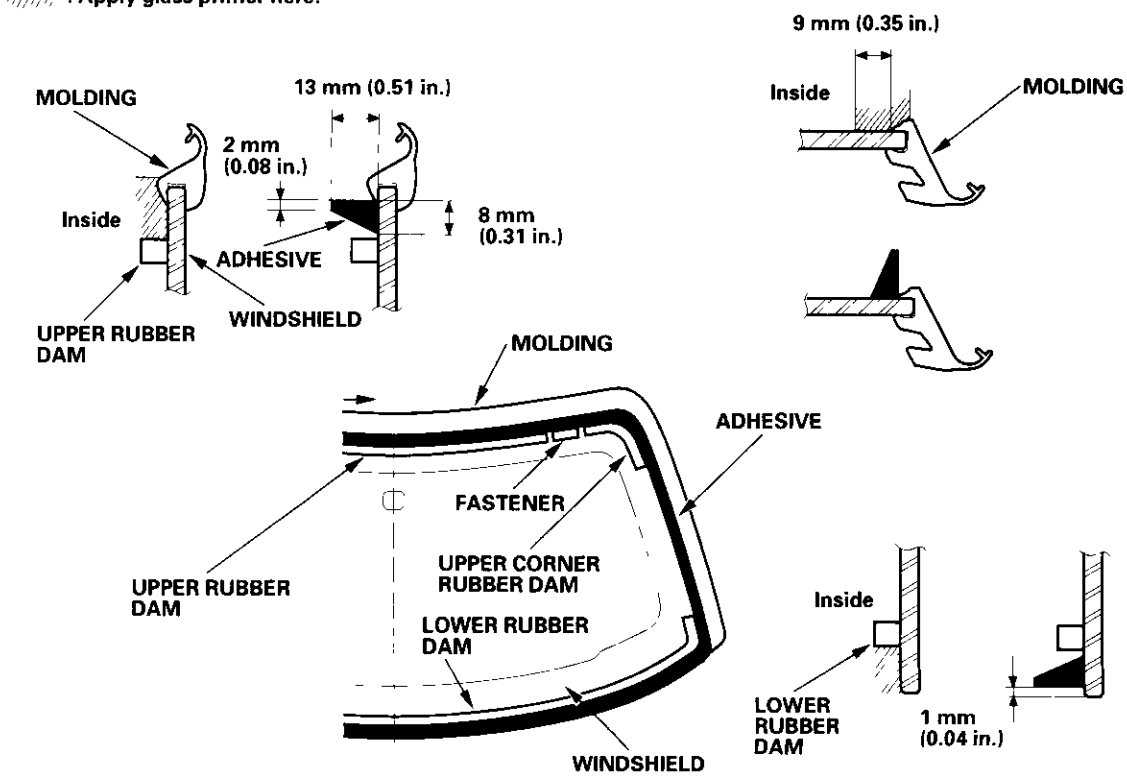

## Rear Window Replacement

### Removable Hardtop

NOTE:
- To remove and install the rear window, remove the roof from the body.
- Place the roof on padded supports to prevent damage.
- Have an assistant help you remove and install the rear window.
- Familiarize yourself with the glass replacement process (see page 20-25).
- Remove the rear window and molding as an assembly. If the molding is damaged, replace it.

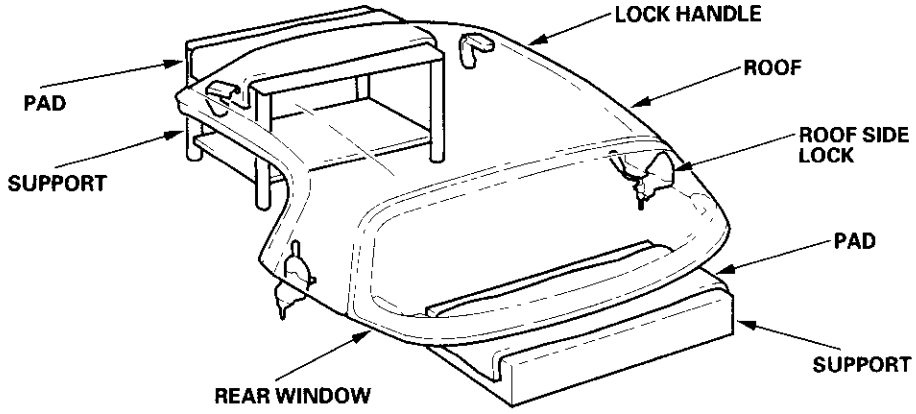


### Parts Removal

Remove these items, and disconnect the rear window defogger connectors:

- Headliner (see page 20-56)
- Rear window lower trim (see page 20-55)

### Cutting Positions

Slip the piano wire through the adhesive at each position as shown, and pull back the piano wire in direction indicated by arrow. For the upper portion, cut the adhesive with the utility knife from inside while pushing the rear window out.

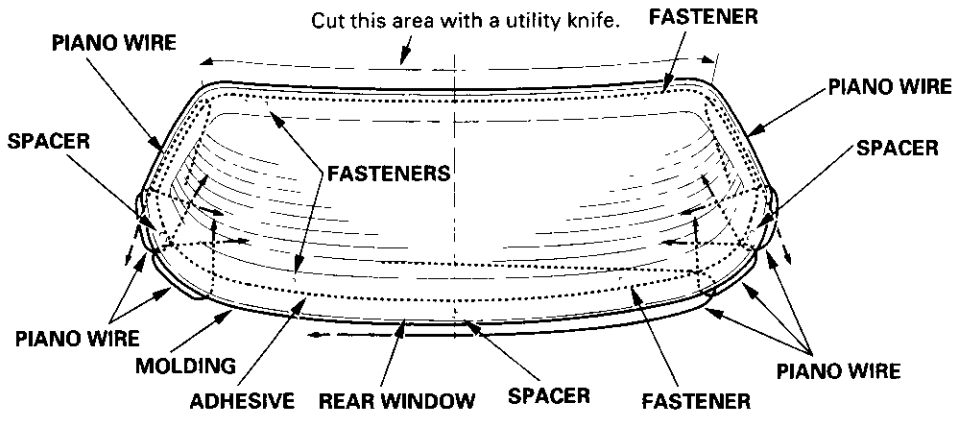

## Rubber Dams, Fasteners, and Spacers Installation

- Be sure the rubber dams, fasteners, and spacers line up with the alignment marks.
- Glue the upper fastener with adhesive tape (3M 4215, or equivalent) and the lower fastener with adhesive tape (3M 5312, or equivalent).
- Glue the rubber dams and spacers with adhesive tape (NITTO 501M, or equivalent).

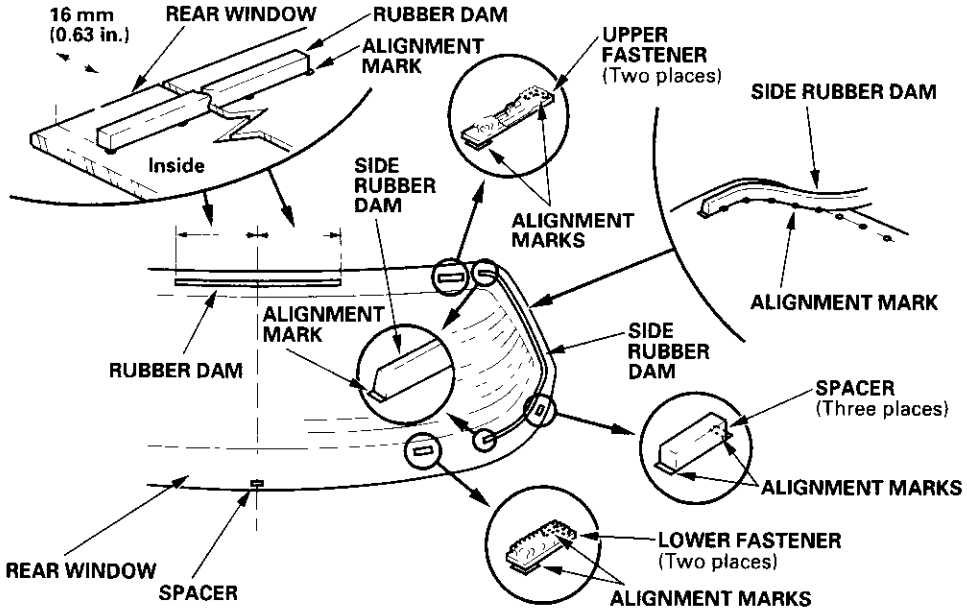


## Molding Installation

To glue the molding, apply a light coat of primer (3M N-200, or equivalent) to the bottom area on the outside of the rear window , and glue the molding with urethane adhesive.

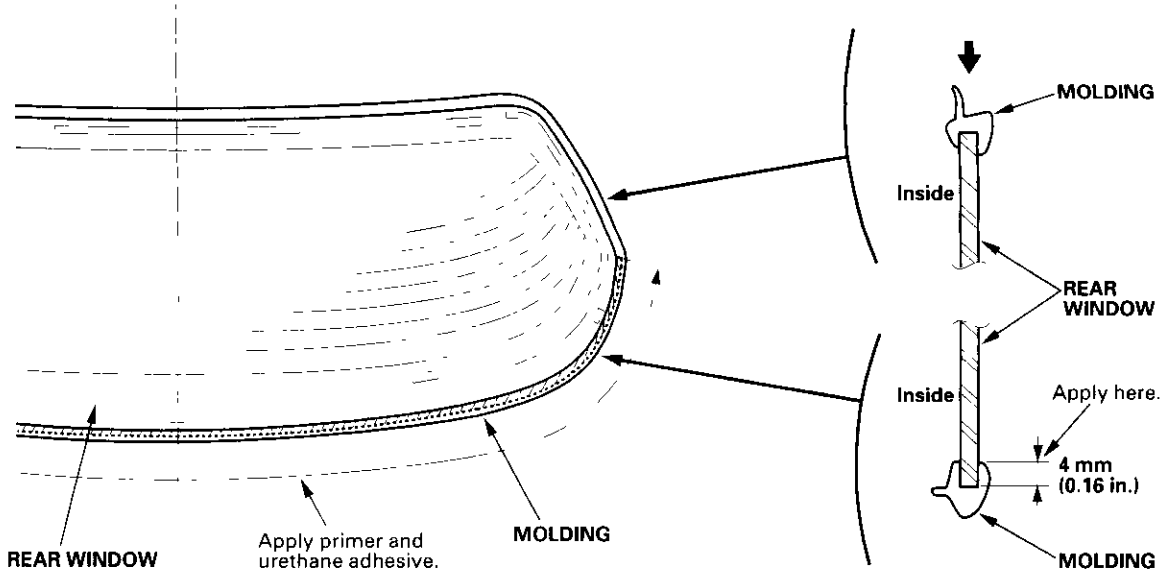


(cont'd)

## Rear Window Replacement (cont'd)

### Fastener (roof side) Installation/Body Primer Application

Glue the lower fasteners with adhesive tape (3M 4256, or equivalent).

: Apply body primer here.

Unit: mm (in.)

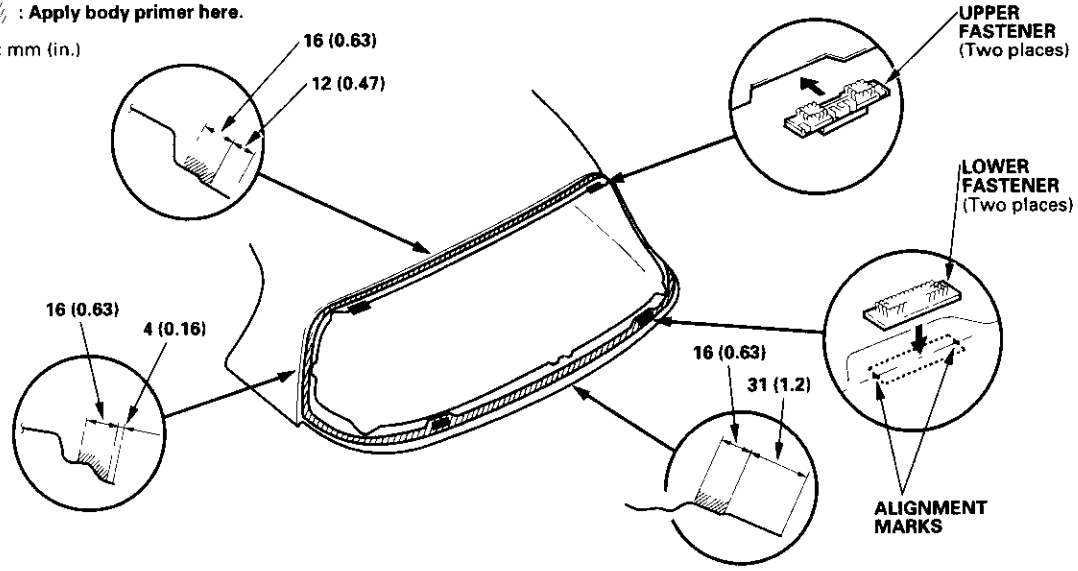


### Glass Primer and Adhesive Application

: Apply glass primer here.

Unit: mm (in.)

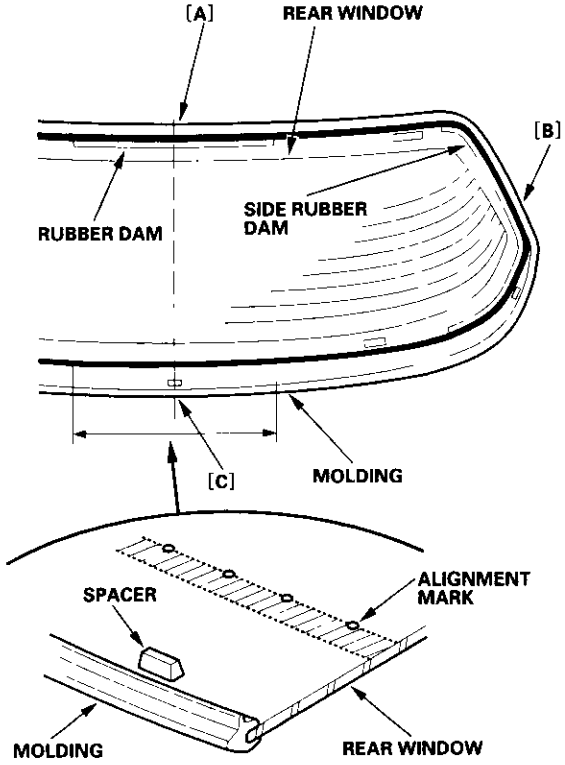


[A] portion:

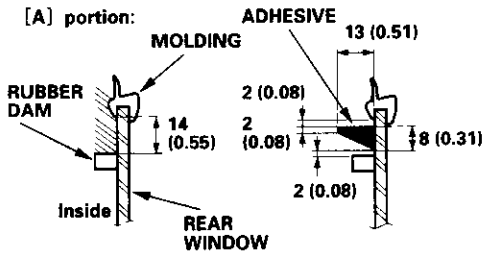


[B] portion:

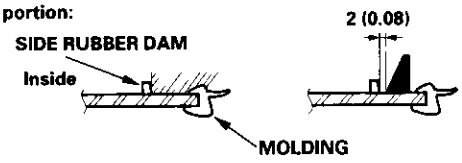


[C] portion:

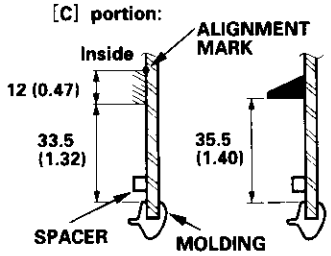

## Component Location Index

'00-01 Models

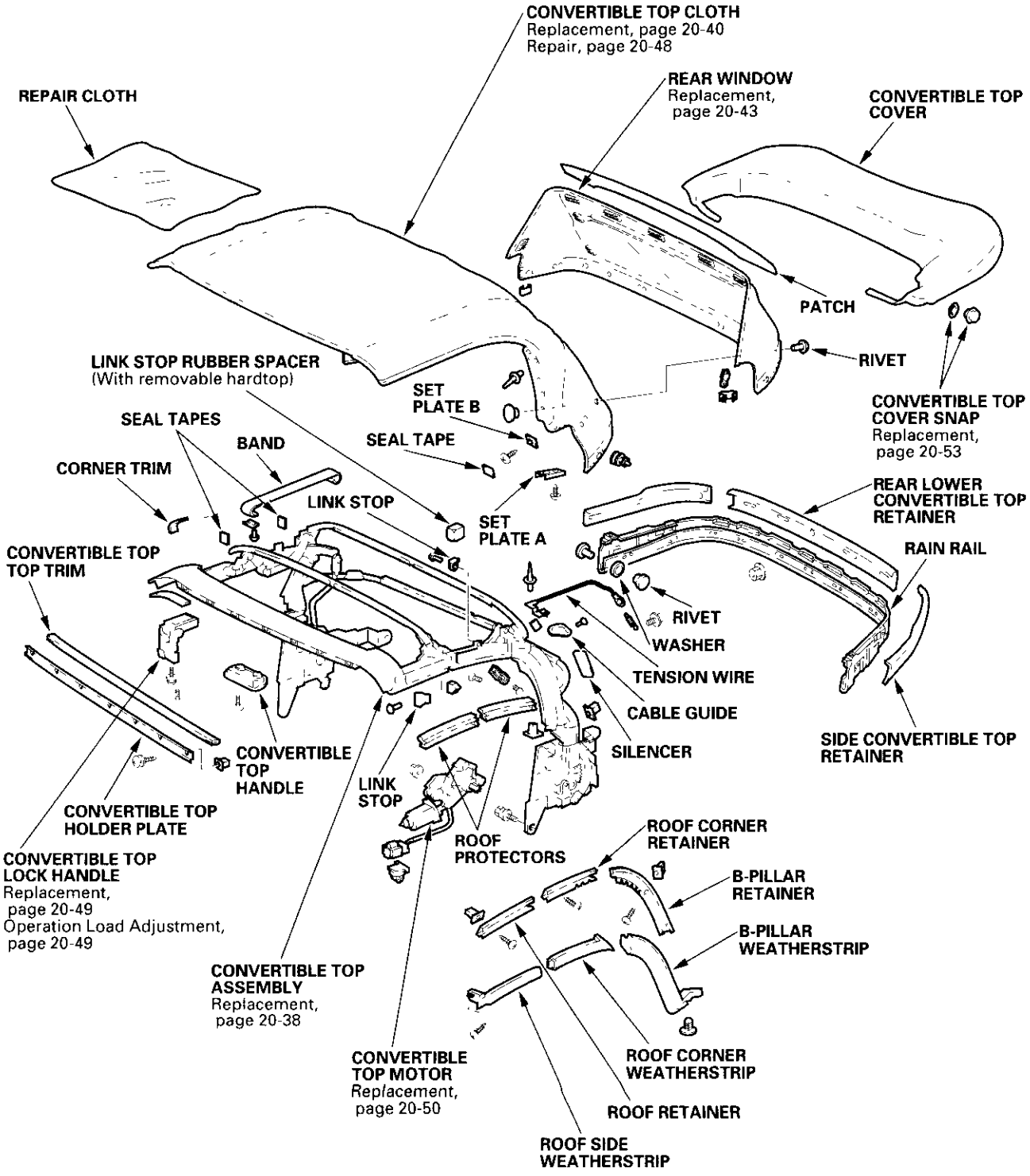


(cont'd)

## Component Location Index (cont'd)

'02-03 Models

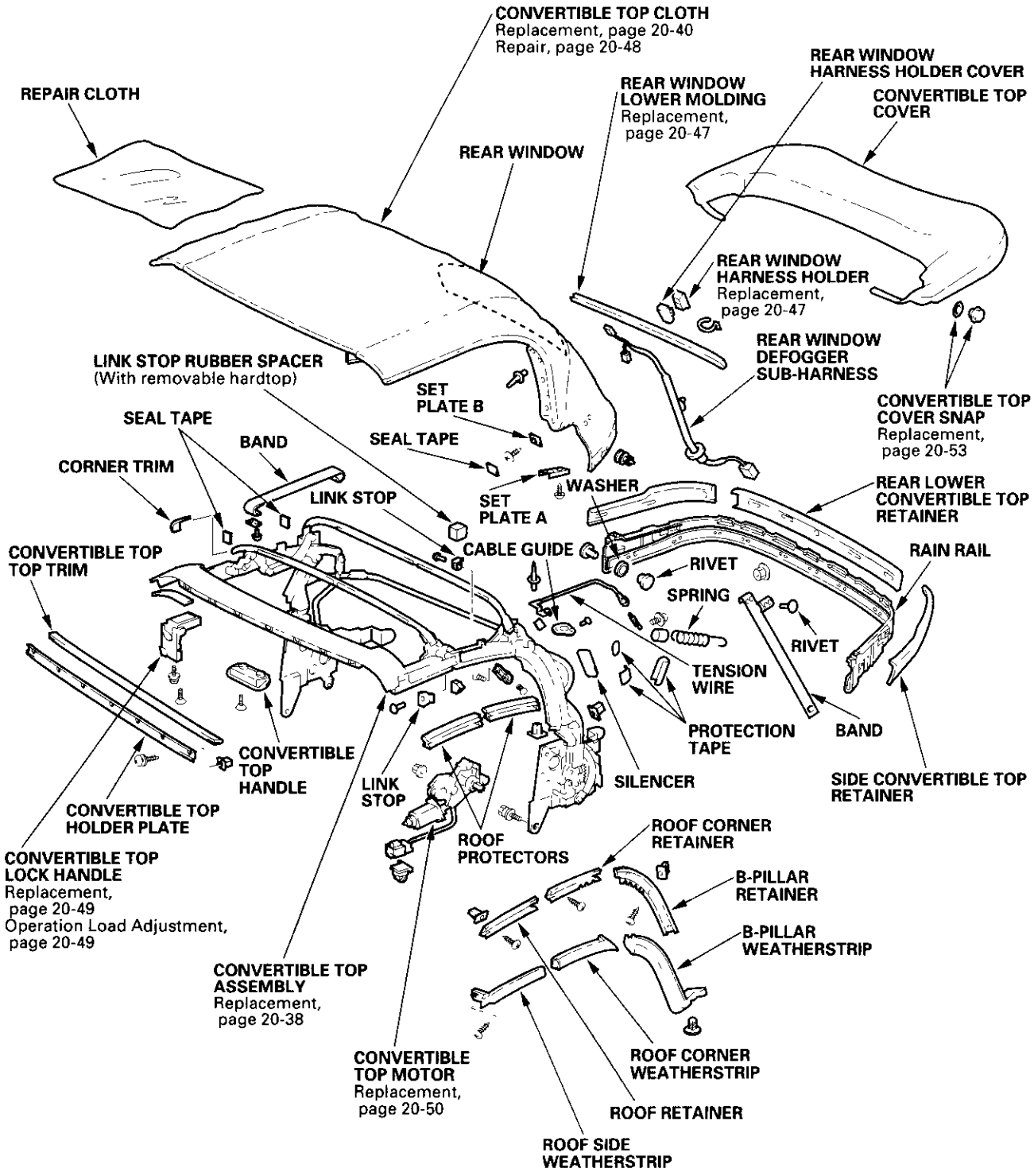

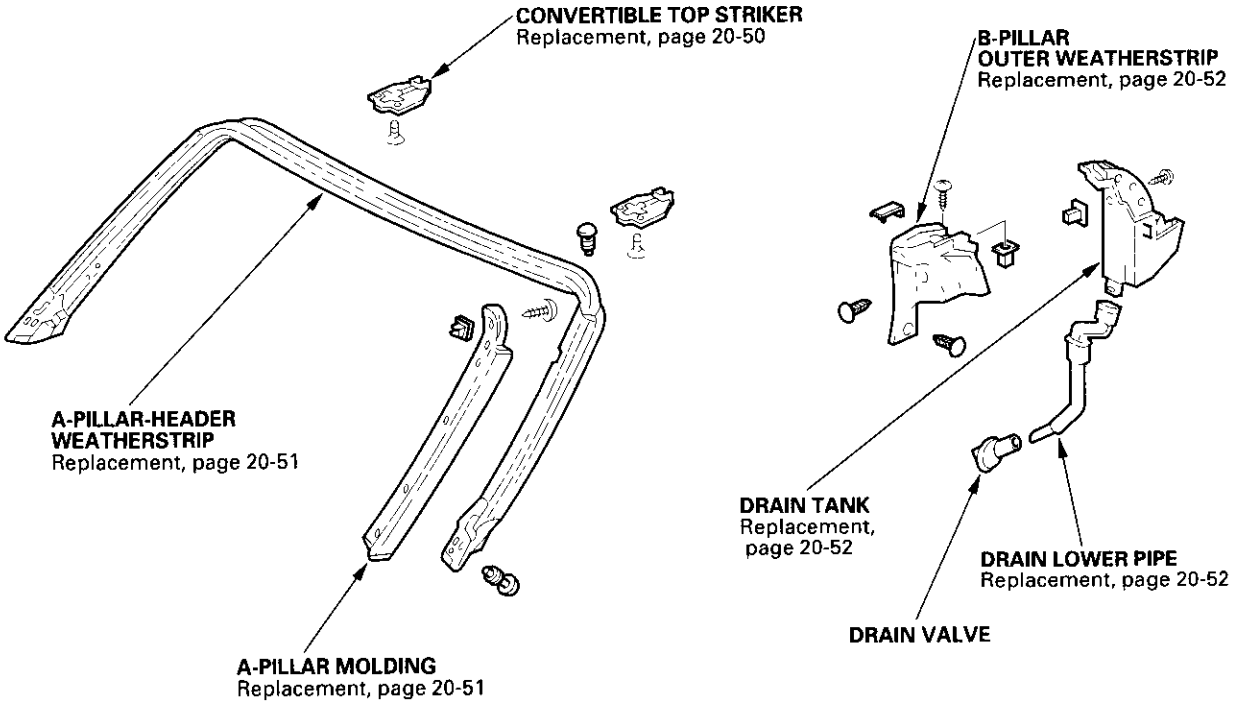
CONVERTIBLE TOP STRIKER
Replacement, page 20-50
B-PILLAR
OUTER WEATHERSTRIP
Replacement, page 20-52
A-PILLAR-HEADER
WEATHERSTRIP
Replacement, page 20-51
DRAIN TANK
Replacement,
page 20-52
DRAIN LOWER PIPE
Replacement, page 20-52
DRAIN VALVE
A-PILLAR MOLDING
Replacement, page 20-51

## Convertible Top Assembly Replacement

NOTE:
- Have an assistant help you remove the convertible top assembly.
- Take care not to scratch the top cloth and body.
- Put on gloves to protect your hands.
- If the top does not move with the convertible top switch, disconnect the emergency connector near the passenger's kick panel (see page 22-147), and move the top by hand.

1. Remove both rear tray side trims (see page 20-71).

2. Remove the top in the numbered sequence.

3. Install the convertible top in the reverse order of removal, and note these items:

   - Make sure the connectors are plugged in properly.
   - Check operation of the top.
   - Check that each top lock handle works smoothly. If necessary, adjust the hook position (see page 20-49).
   - Check that each door glass contacts the weatherstrips evenly.
   - Check for water leaks (see step 17 on page 20-14).
   - Test-drive and check for wind noise and rattles.

**Fastener Locations**

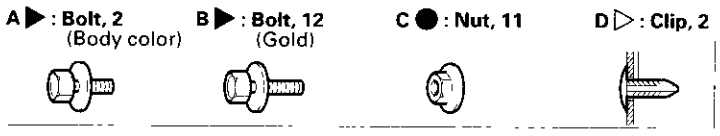


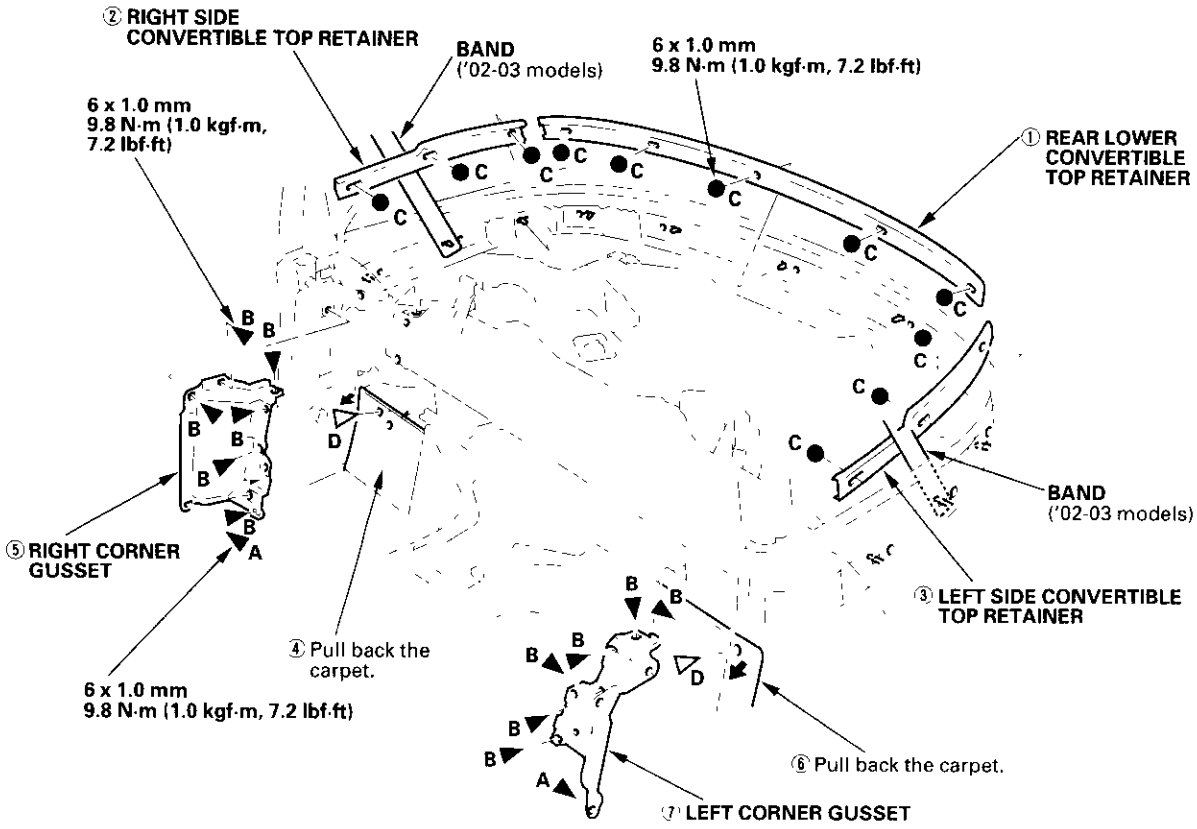

**Fastener Locations**

E ▶ : Bolt, 10 F ▷ : Clip, 2 G ▷ : Clip, 2

'00 model '01-03 models

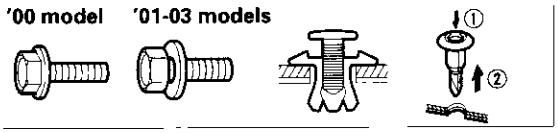


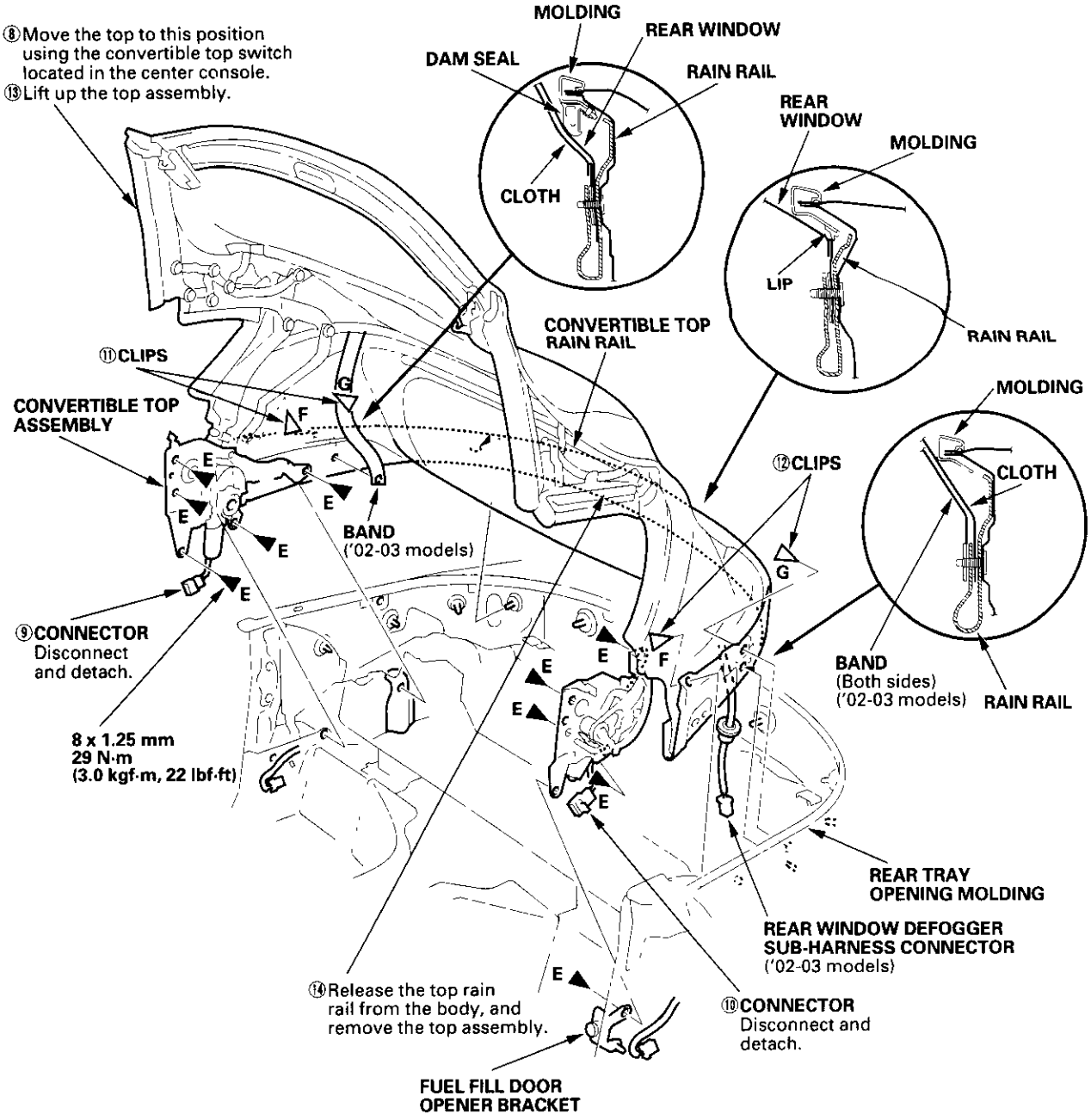

## Convertible Top Cloth Replacement

NOTE:
- Take care not to scratch the top frame.
- Put on gloves to protect your hands.
- Wear eye protection when removing the rivets with a drill.
- When removing the rivets, drill holes in the rivets with a 4 mm (0.16 in.) drill.
- This illustration shows the left side of the vehicle, repeat the procedure on the right side in the same manner.

### Cloth Replacement

1. Remove the convertible top assembly (see page 20-38).

2. Remove the convertible top cloth in the numbered sequence.

3. Install the cloth in the reverse order of removal, and note these items:

   - To prevent wrinkles when installing the cloth, make sure the material is stretched evenly over the frame before securing the screws and rivets.
   - After installing the cloth, reinstall the top assembly. Check the operation of the top, and inspect the cloth for wrinkles.
   - Check that the weatherstrip fit flush.
   - Check that each door glass contacts the weatherstrips evenly. If necessary, adjust each retainer (see page 20-11).
   - Check for water leaks (see step 17 on page 20-14).
   - Test-drive and check for wind noise and rattles.

**Fastener Locations**

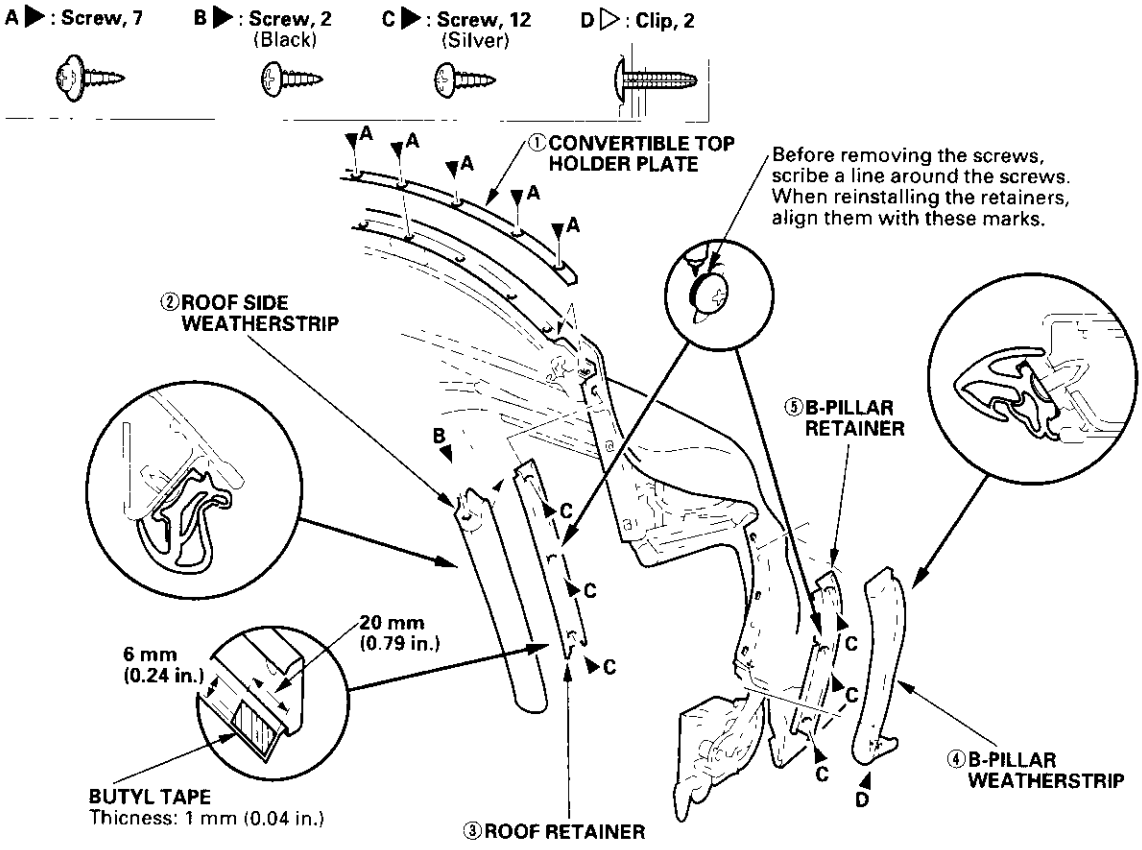

**Fastener Locations**

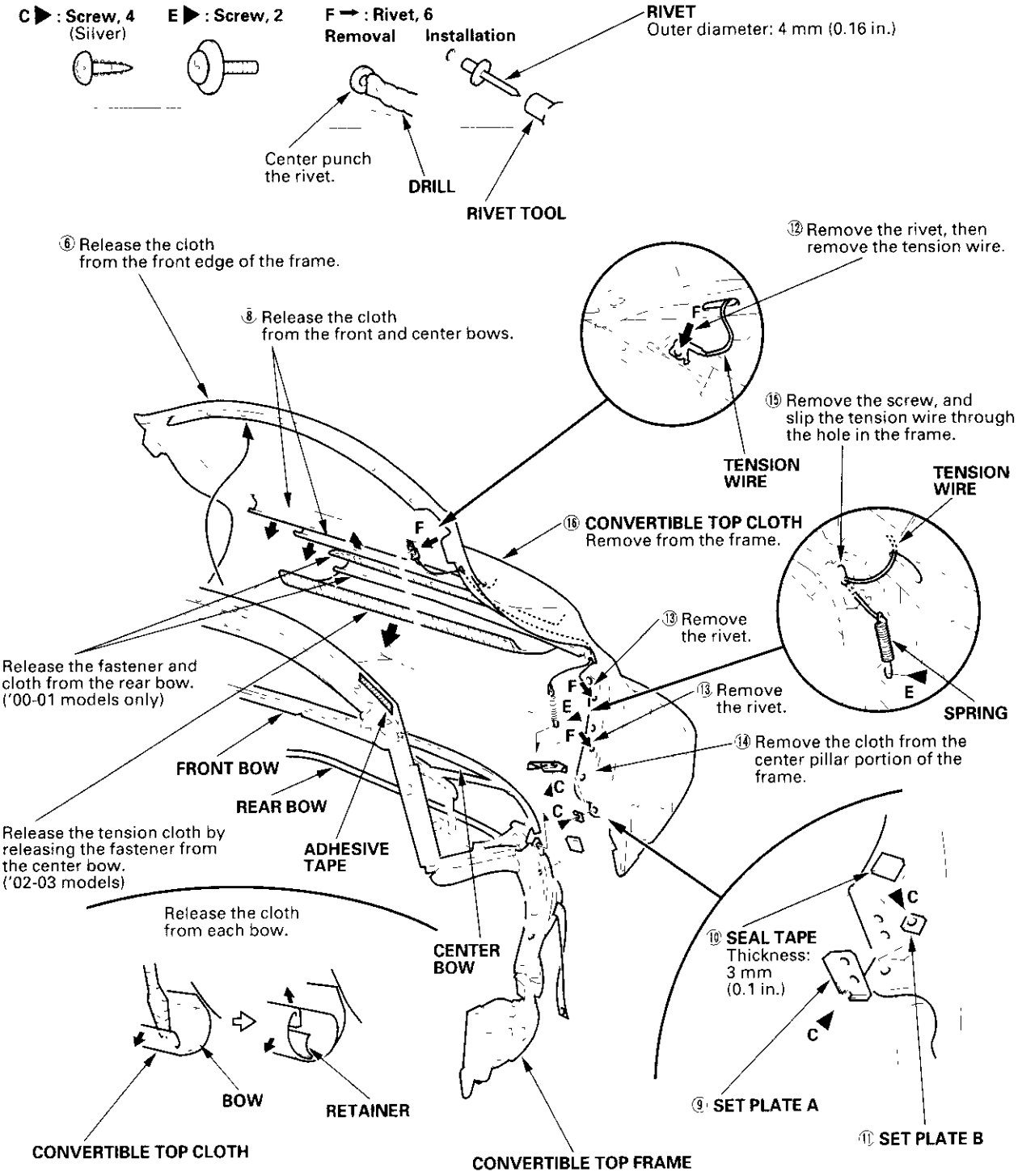


(cont'd)

## Convertible Top Cloth Replacement (cont'd)

### Reinstalling the Cloth to each Bow

Make sure the alignment notch of the cloth is in the center portion of the retainer. After reinstalling, press on the retainers securely.

**Center portion:**

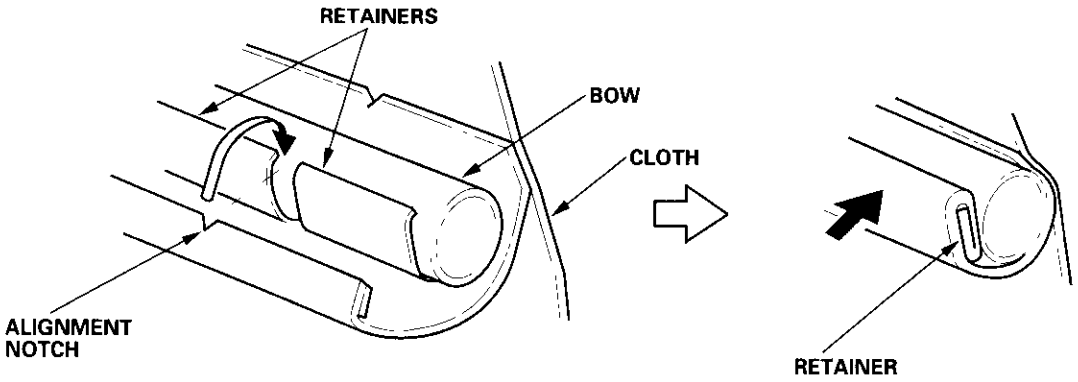


### Cloth and Weatherstrip Check

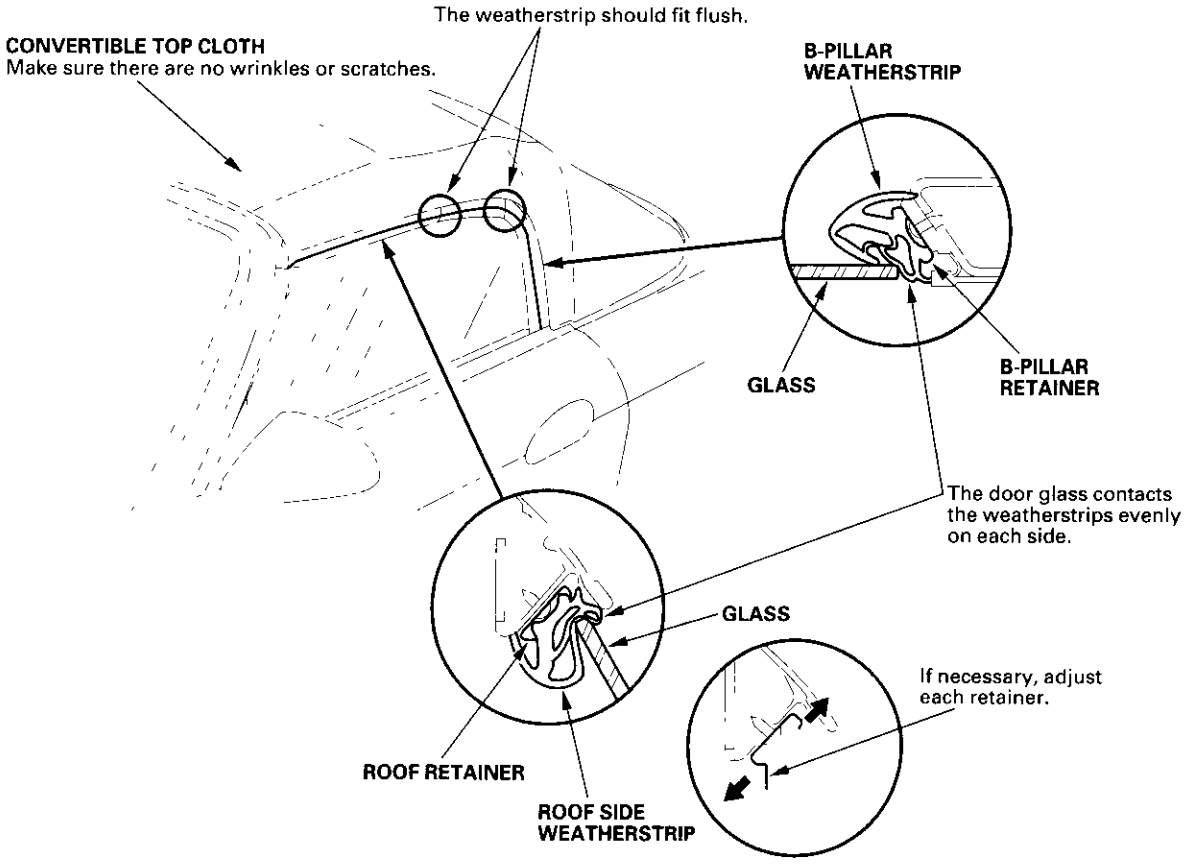

# Rear Window Replacement

## '00-01 Models

NOTE:
- Take care not to scratch the top frame.
- Wear eye protection when removing the rivets with a drill.

1. Open the roof, and remove these items:
   - Seat, both sides (see page 20-86)
   - Door sill trim, both sides (see page 20-69)
   - Rear side trim, both sides (see page 20-70)
   - Roll bar lower trim, both sides (see page 20-70)
2. Close the roof. Remove the clips that hold the rear tray trim, the rear tray side trim, and the rear tray (see page 20-71)
3. Remove the spare tire cover and the spare tire.
4. Remove the rear tray and the rear tray trim through the trunk opening.
5. Lift the convertible top cloth (A) that overlaps the top of the rear window (B), and remove the patch (C) from the roof zipper.

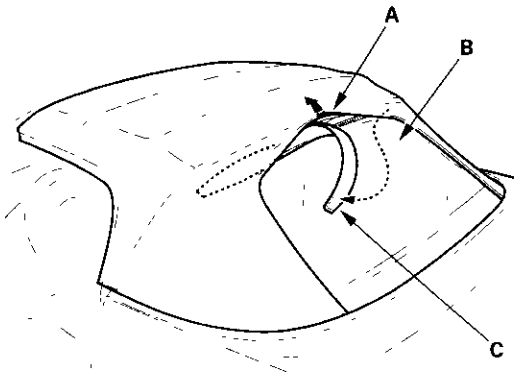


6. Open the roof, and lift up the center console (see page 20-76).
7. Remove the rear console and the rear console box (see page 20-78).
8. Close the roof. Remove both roll bars and the rear tray side trim (see page 20-52).
9. Remove the 11 nuts, then remove the rear lower convertible top retainer (A), right side convertible top retainer (B), and left side convertible top retainer (C).

**Fastener Locations**

● : **Nut, 11**

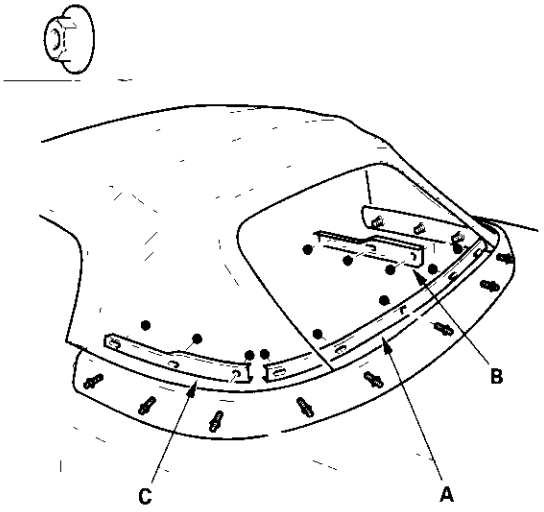


(cont'd)

## Rear Window Replacement (cont'd)

10. Open the roof half-way, and remove the two clips (A, B) on each side of the top between the quarter panel and the roof.

**Fastener Locations**

A ▷: Clip, 2 B ▷: Clip, 2




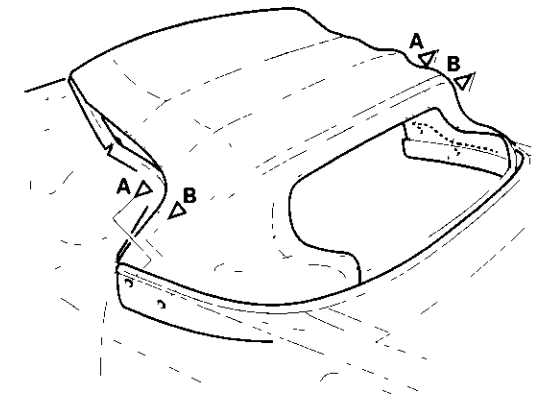


11. Place a rear fender cover (A) on the trunk.

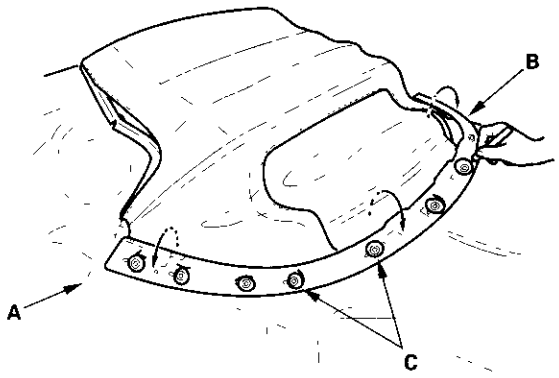


12. Lift up the rain rail (B), and place it on top of the fender cover.

13. Using a marker or white-out, draw a circle (C) around each of the 11 aluminium rivets.

14. Pull the rain rail (A) up, and turn it inside-out. With the rain rail resting on the roof (B), drill out the rivets (C) with a 4 mm (0.16 in.) drill (D). The washers (E) on the rain rail are not reused.

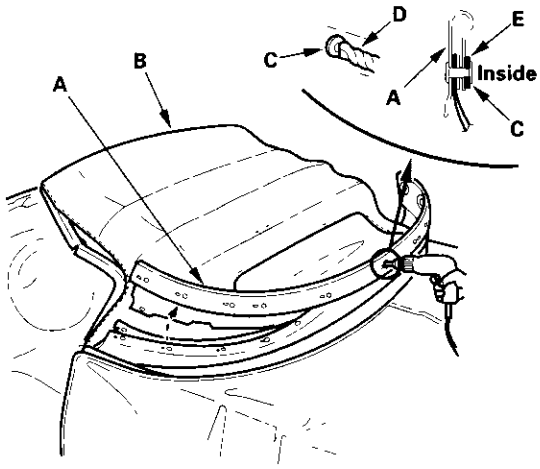


15. Remove the rain rail.

16. Using a flat-tip screwdriver, pry apart the two brass rivets (A) holding the lower roof (B) to the lower part of the window (C).

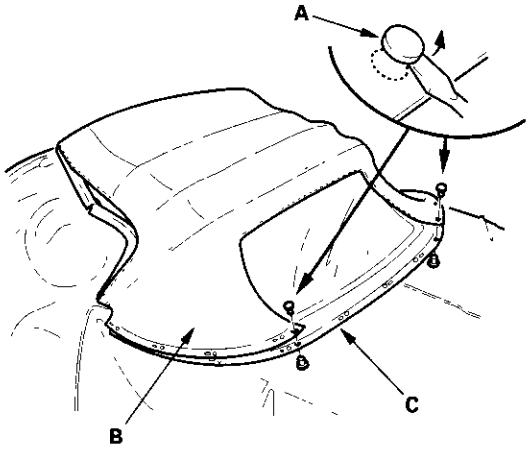

17. Release the fasteners (A) to expose the zipper (B), and remove the end stops (C) from both ends of the zipper.

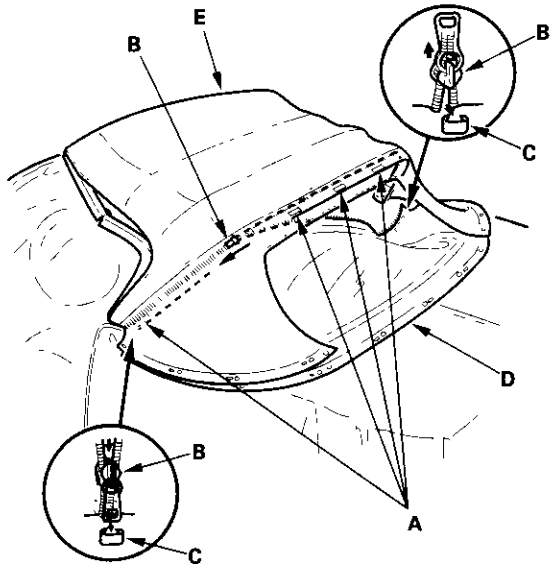


18. Carefully unzip the rear window (D) from the roof (E), then remove the window. Hold the zipper tight to keep it from falling into any crevices.

19. Zip the new window (A) onto the roof (B), making sure the alignment notches (C) are lined up. It may take several attempts to line up the marks.

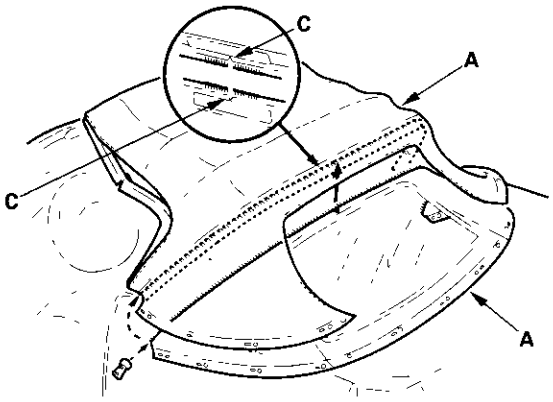


20. Turn the convertible top cloth (A) inside out, and apply a new patch (B) on the zipper (C). Make sure the alignment notch (D) aligns with the middle of the rear window (E).

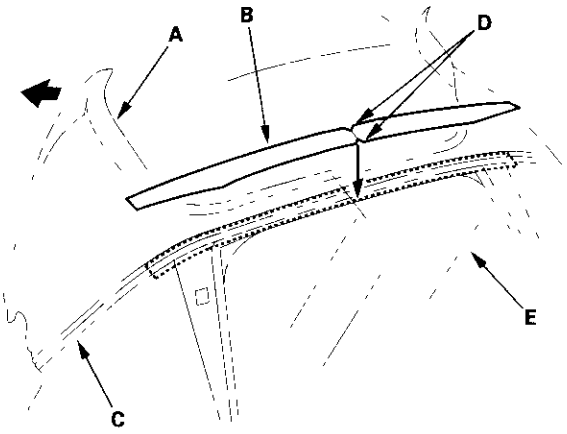


21. Place the convertible top cloth on the rear window.

(cont'd)

## Rear Window Replacement (cont'd)

22. Secure the lower part of the rear window (A) to the lower part of the convertible top cloth (B) with new two-piece brass rivets (C).

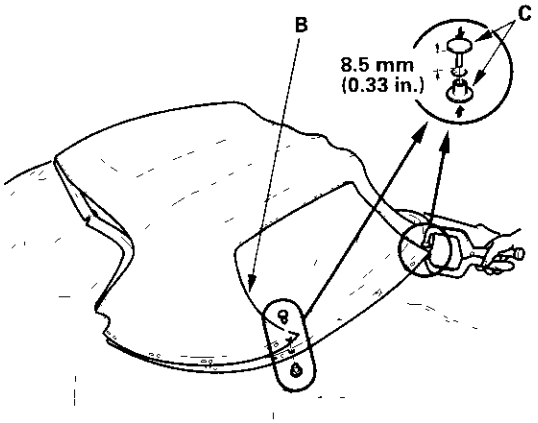


23. Attach the convertible top cloth, rear window, and rain rail together with new pop rivets and washers. Make sure the crush end of each rivet is facing the rear of the car when the rain rail is sitting in place.

| | | | | | |
|---|---|---|---|---|---|
| A ▷: | 3/16" x 3/8" Rivet, 3 | B ▷: | 3/16" x 1/2" Rivet, 8 | C ▷: | 3/16" Washer, 11 |

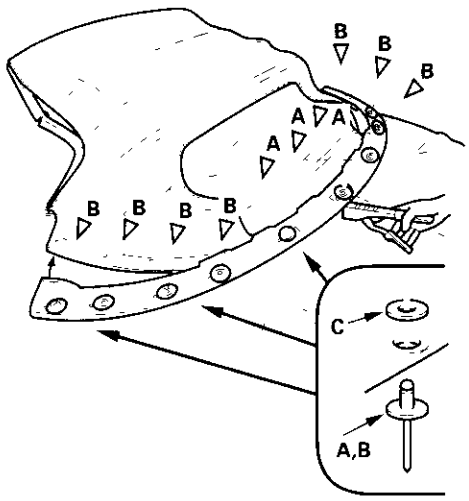


24. Set the rain rail in position, and install the clips between the quarter panel and the roof.

25. Reinstall the left side convertible top retainer (A), right side convertible top retainer (B), and rear lower convertible top retainer (C).

**Fastener Locations**

● : Nut, 11

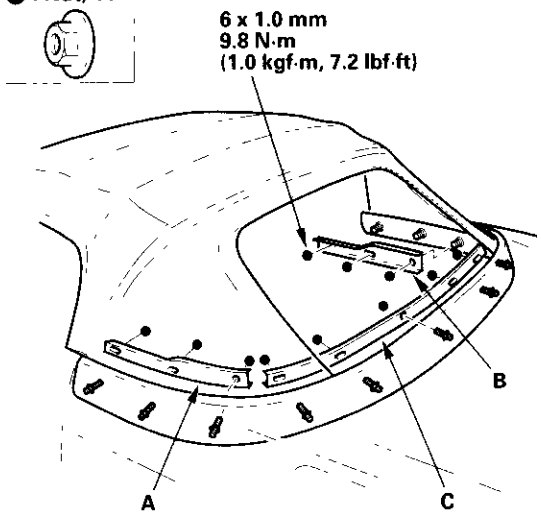


26. Reinstall all remaining interior components and trim pieces.

27. Check for water leaks (see step 17 on page 20-14).

# Rear Window Lower Molding/Rear Window Harness Holder Replacement

## '02-03 Models

NOTE:
- Put on gloves to protect your hands.
- Take care not to scratch the top cloth.
- Use seat covers to avoid damaging any surfaces.

1. Lower the convertible top cloth by operating the convertible top.

2. From outside the rear window, remove the molding (A) from the edge of the rear window (B). From inside the rear window, remove the rear window harness holder cover (C) from the rear window harness holder (D), and disconnect the rear window defogger connectors (E). Remove the rear window harness holder from the inside face of the rear window. If necessary, cut the molding with a utility knife.

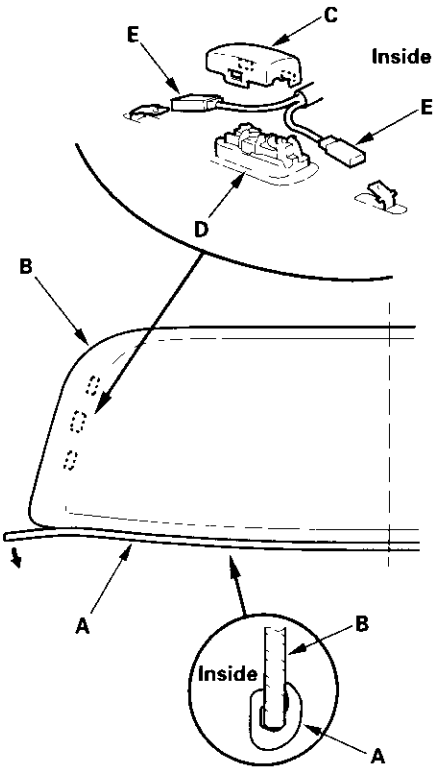


3. Clean the edge of the rear window with alcohol where new molding and harness holder are to be installed. Make sure the bonding surface is kept free of the water, oil, grease.

4. Apply primer (3M N-200, or equivalent) to the areas of the rear window (A) where the molding and harness holder will be glued, and apply primer (3M C-100, or equivalent) to the groove of the molding (B) and to the harness holder (C). Be sure the harness holder lines up with the alignment marks (D).

: **Apply primer here.**

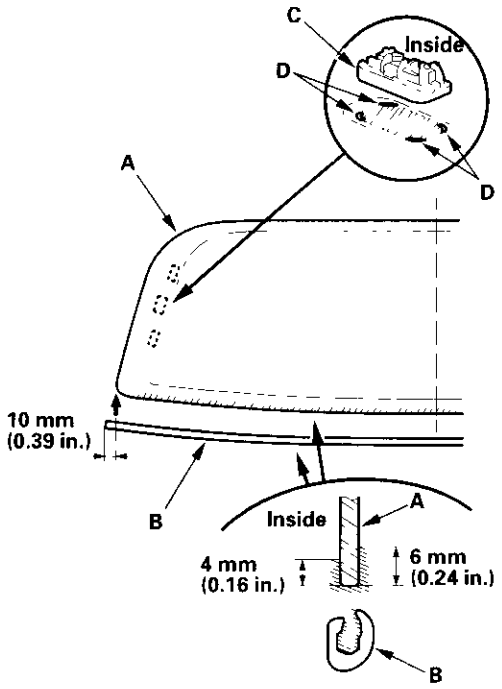


5. Glue the molding and harness holder to the rear window with urethane adhesive.

6. Scrape or wipe the excess adhesive off with a putty knife or towel. To remove adhesive from the rear window, use a soft shop towel dampened with alcohol.

## Convertible Top Cloth Repair

1. The following tools and supplies are required to repair the top cloth.

   - Repair cloth
   - Adhesive (Sunstar 332, or equivalent)
   - Utility knife
   - Ruler
   - Sandpaper

2. Apply a piece of the repair cloth (A) to the inside surface of the top cloth at the damaged area. Cut through both the damaged cloth (B) and the repair cloth using a ruler (C) and a utility knife (D).

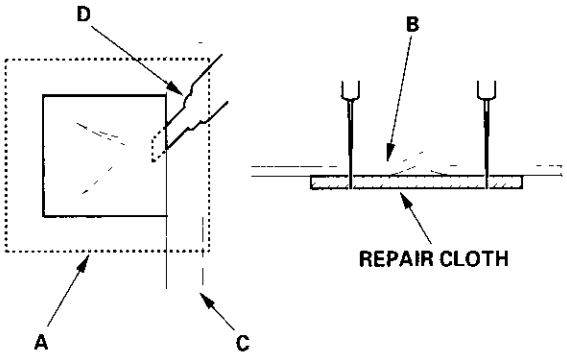


3. Cut a piece of repair cloth (A) so it overlaps the repair opening as shown.

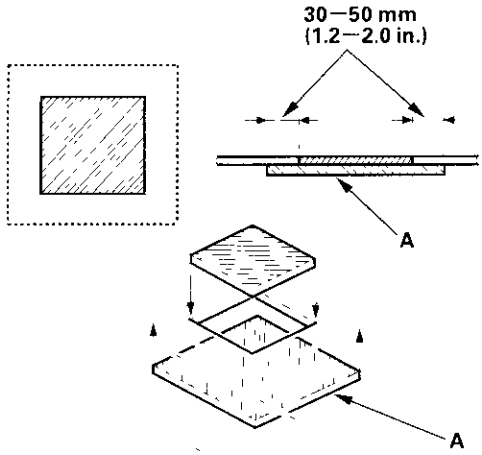


4. Clean the repair cloth where adhesive will be applied.

5. Apply the adhesive (A) to the repair cloth (B) and top cloth (C) as indicated by the arrows.

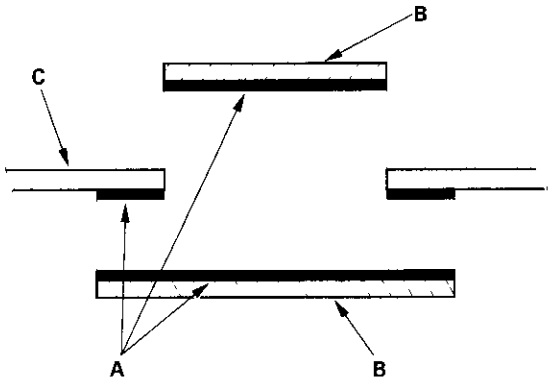


6. Push firmly on the repair cloth.

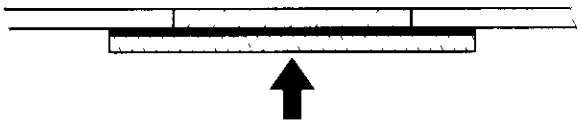

7. Scrape or wipe the excess adhesive off with a soft shop towel dampened with alcohol.

8. Let the adhesive dry. Follows the manufacturer's recommendations for drying time.

9. Check for water leaks (see step 17 on page 20-14).

## Convertible Top Lock Handle Replacement

NOTE: Take care not to scratch the top frame.

1. Remove the convertible top lock handle as shown.
2. Install the handle in the reverse order of removal, and apply multipurpose grease to the springs and the moving portions.

**Fastener Locations**

**A ▶ : Screw, 1 '00 model**
**B ▶ : Screw, 1 '01-03 models**

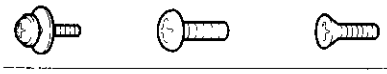

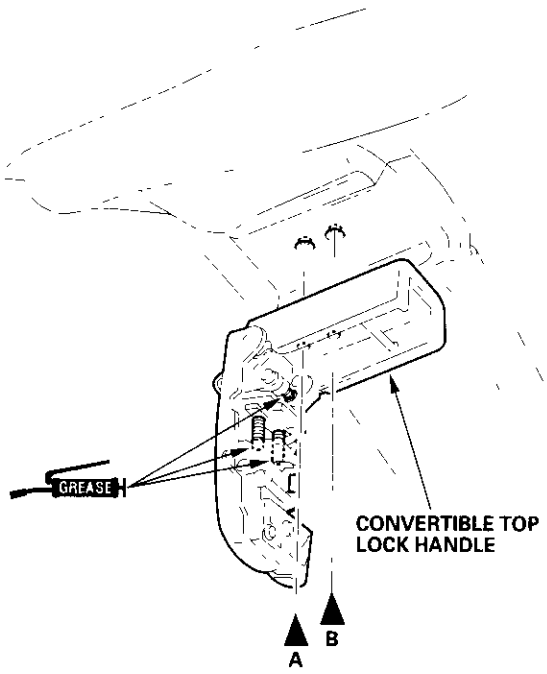


## Convertible Top Lock Handle Operation Load Adjustment

NOTE: Take care not to scratch the interior parts.

1. Remove both rear tray side trim (see page 20-71).
2. Close the top, then lock it securely with both lock handles (A).

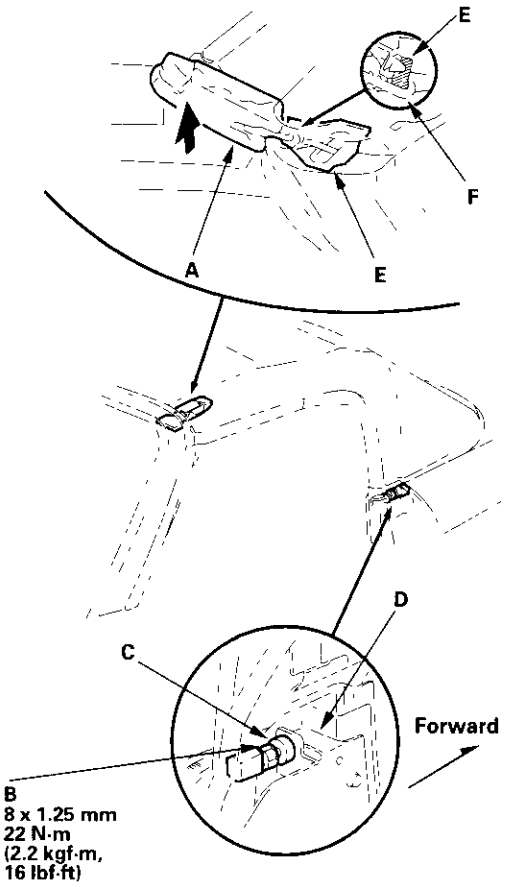


3. Loosen the locknut (B) on the link stop (C) on each side.
4. Adjust the link stop (C) on each side until it makes contact with the link set bracket (D). There should be no clearance between the convertible top striker (E) and the hook (F).
5. Tighten the locknut, and check that the lock handle works smoothly on each side.
6. Reinstall all removed parts.

## Convertible Top Motor Replacement

NOTE:
- Take care not to scratch the interior parts.
- Put on gloves to protect your hands.

1. Remove these items:
   - Roll bar upper trim (see page 20-71)
   - Corner gusset (see page 20-38)
2. Remove the convertible top motor as shown.
3. Install the motor in the reverse order of removal, and note these items:
   - Make sure the connector is plugged in properly.
   - Apply multipurpose grease to the gear portion.
   - Check the motor operation.

**Fastener Locations**

**A ● : Nut, 3**



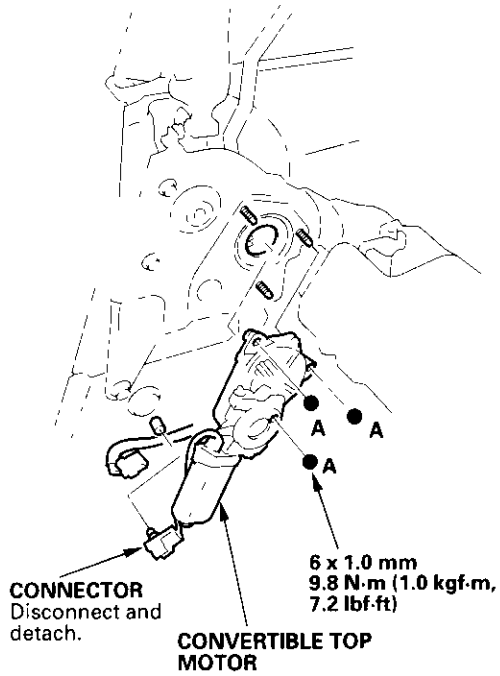


## Convertible Top Striker Replacement

NOTE: Take care not to scratch the interior parts.

1. Remove the windshield header interior trim (see page 20-68).
2. Remove the convertible top striker as shown.
3. Install the striker in the reverse order of removal.

**Fastener Locations**

**A ▶ : Screw, 2**



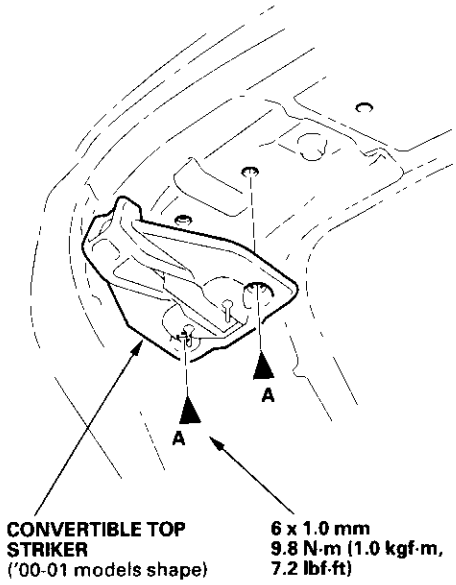


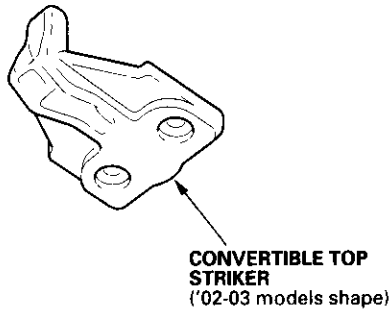

# A-Pillar-Header Weatherstrip and A-Pillar Molding Replacement

NOTE:
- Take care not to scratch the body.
- Use a clip remover, to remove the clips.

1. Remove the A-pillar-header weatherstrip and A-pillar-molding as shown.

2. Install the weatherstrip and molding in the reverse order of removal, and note these items:

   - If the old molding is to be reinstalled, scrape off the double-faced adhesive tape, then clean the molding surface with alcohol. Glue the new double-faced adhesive tape (3M 4252, or equivalent) to the molding.
   - When installing the molding, first tighten the screw at top of the molding.
   - Replace any damaged clips.
   - If the old weatherstrip is to be reinstalled, scrape off all traces of old EPT sealer and butyl tapes, then clean the weatherstrip surface with alcohol. Glue the new EPT sealer and butyl tapes to the weatherstrip.
   - When installing the weatherstrip, align the roof clip hole on the weatherstrip with the hole on the molding.
   - Before installing the weatherstrip, fold the separator of the butyl tape at the roof portion. After installing the weatherstrip, carefully pull the separator away.
   - Press the butyl tape portions to make the adhesive stick.
   - Check that each door glass contacts the weatherstrip evenly.
   - Check for water leaks (see step 17 on page 20-14).

**Fastener Locations**

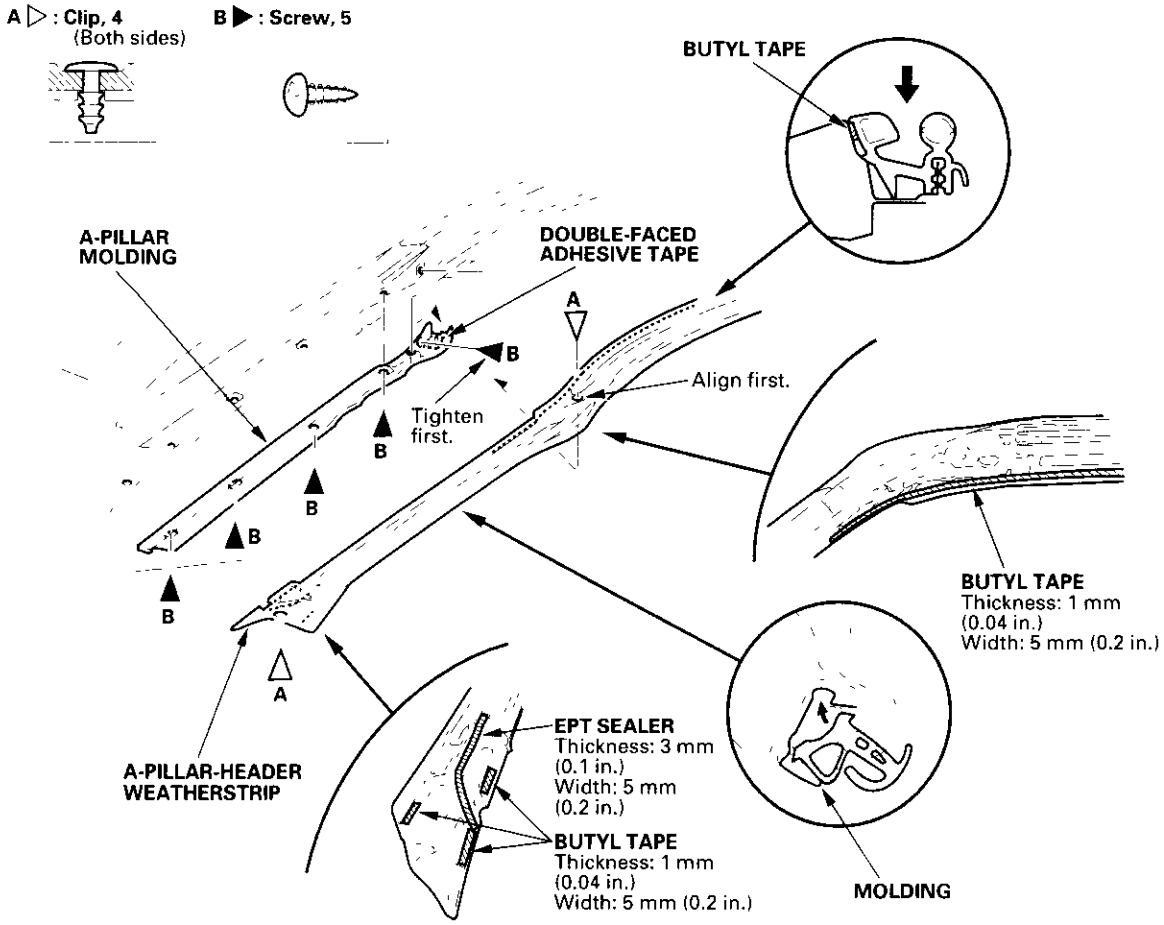

## B-Pillar Outer Weatherstrip Replacement

NOTE:
- Take care not to scratch the body.
- Use a clip remover, to remove the clips.

1. Remove the B-pillar outer weatherstrip as shown.
2. Install the weatherstrip in the reverse order of removal, and note these items:
   - Replace any damaged clips.
   - If the old weatherstrip is to be reinstalled, scrape off all traces of old butyl tape, then clean the weatherstrip surface with alcohol. Glue the new butyl tape into position.

**Fastener Locations**

**A ▶ : Screw, 1** **B ▷ : Clip, 1** **C ▷ : Clip, 1**

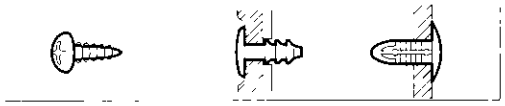

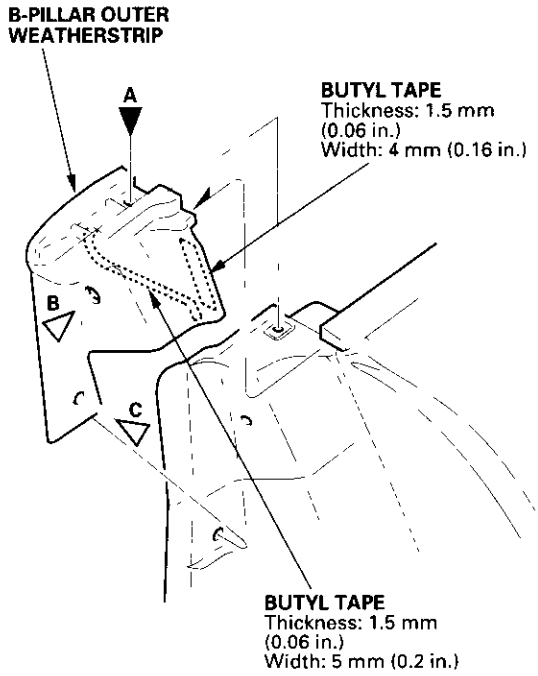


## Drain Tank and Lower Drain Hose Replacement

NOTE:
- Take care not to scratch the body.
- Take care not to drop the screw.

1. Remove the convertible top assembly (see page 20-38).
2. Remove the drain tank and lower drain hose as shown.
3. Install in the reverse order of removal, and note these items:
   - Replace the clip if damaged.
   - Make sure the lower drain hose is inserted to the drain valve properly.
   - Make sure the drain tank is connected to the lower drain hose properly.

**Fastener Locations**

**A ▶ : Screw, 1** **B ▷ : Clip, 1**



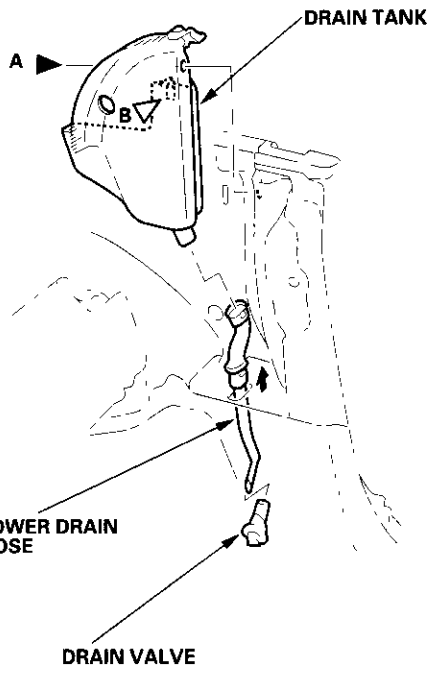

## Convertible Top Cover Snap Replacement

NOTE: Take care not to scratch the convertible top cover.

1. Using a snap ring pliers (A), remove the nut (B) from the snap (C), then remove the snap from the convertible top cover (D).

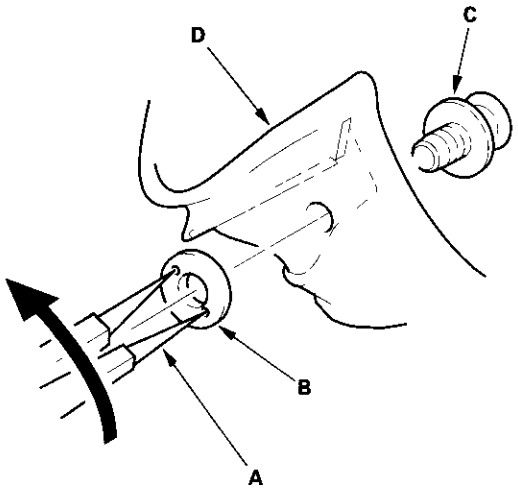


2. Install the cover snap in the reverse order of removal.

# Removable Hardtop

## Component Location Index

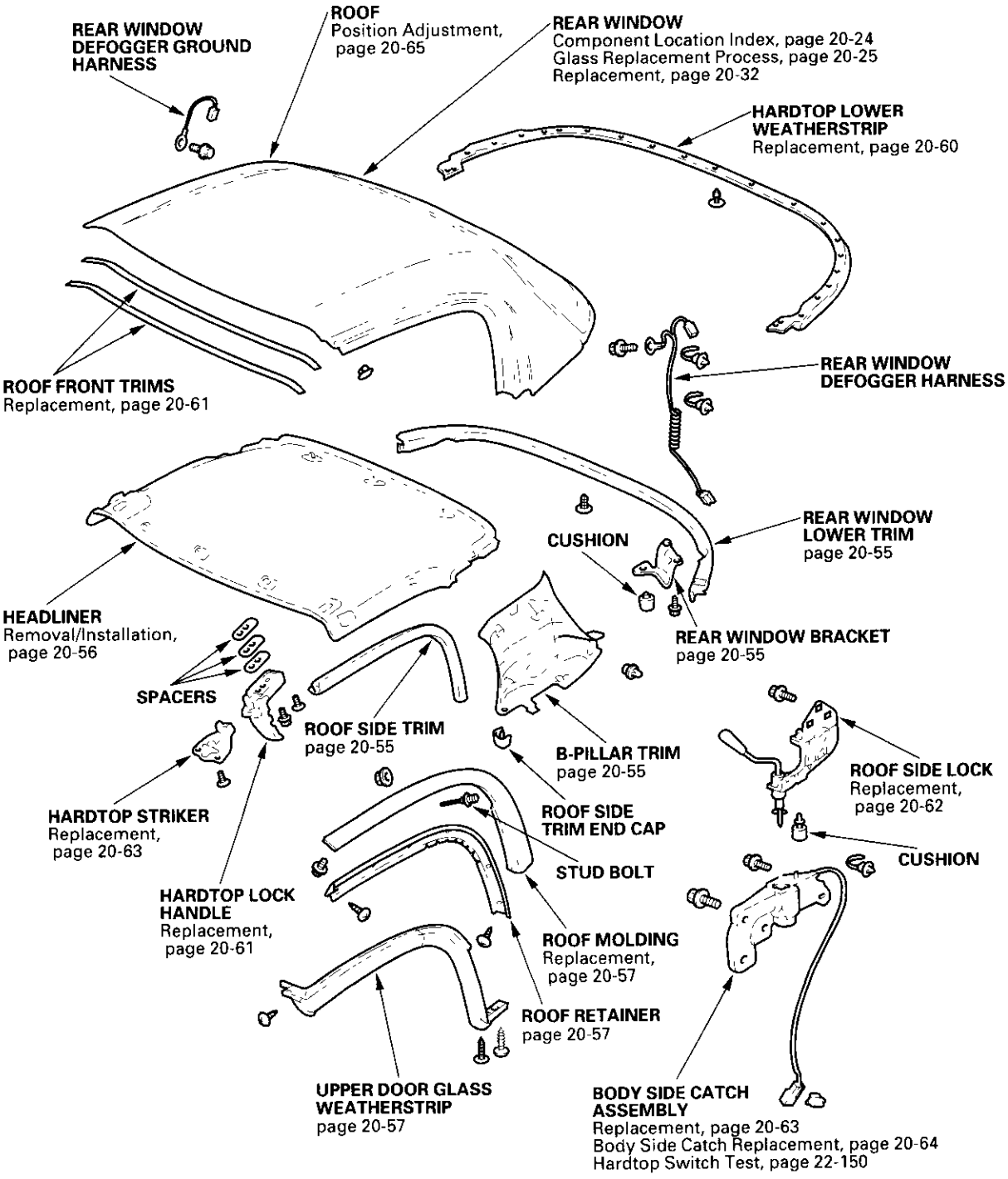

# Interior Trim Removal/Installation

NOTE:
- Put on gloves to protect your hands.
- To remove and install the interior trim, remove the roof from the body.
- When prying with a flat-tip screwdriver, wrap it with protective tape to prevent damage.
- Use a clip remover to remove the rear window lower trim clips.
- Take care not to bend or scrach the interior trim.

1. Remove the trim as shown.

2. Install the trim in the reverse order of removal, and note these items:

   - Replace the damaged adhesive tape and any damaged clips.
   - Push the clip portions into place securely.
   - Before peeling away the adhesive backing from the adhesive tape of the end cap, install the roof side trim on the roof tentatively to check the position of the trim end.
   - When installing the roof side trim, first install the front end, and insert the lower end into the end cap, then push the corner portion against the roof securely. Make sure there is no clearance between the trim and cap.

**Fastener Locations**

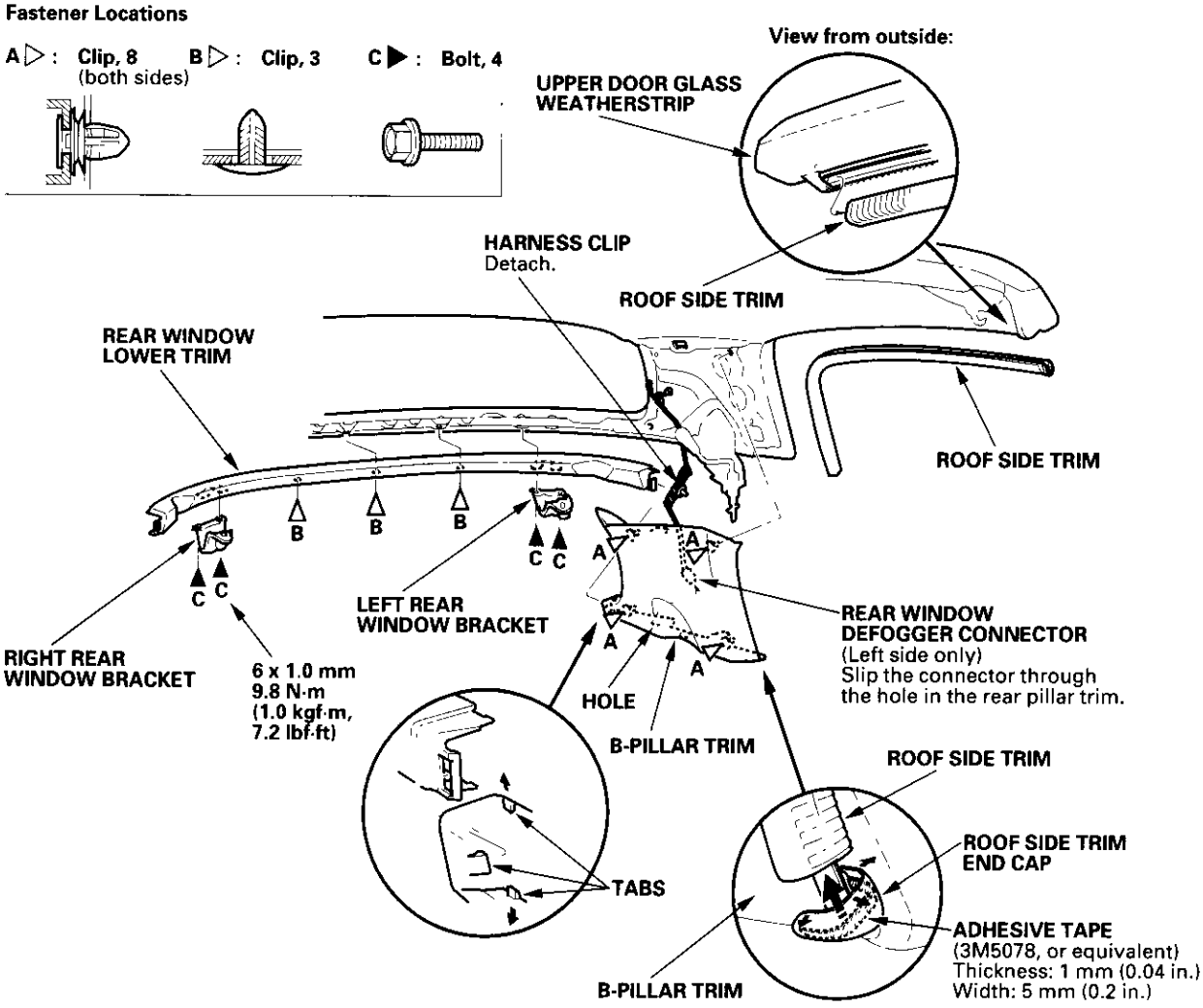

## Headliner Removal/Installation

NOTE:
- Put on gloves to protect your hands.
- To remove and install the headliner, remove the roof from the body.
- Have an assistant help you remove and install the headliner.
- Take care not to bend or scrach the headliner.

1. Remove these items:

   - B-pillar trim, both sides (see page 20-55).
   - Hardtop lock handle, both sides (see page 20-61).
   - Upper door glass weatherstirp, front edge portions from both sides as necessary (see page 20-57).

2. Remove both front edge portions of the upper door glass weatherstrips (A) (see page 20-57).

**Fastener Locations**

**B ▷ : Clip, 8**

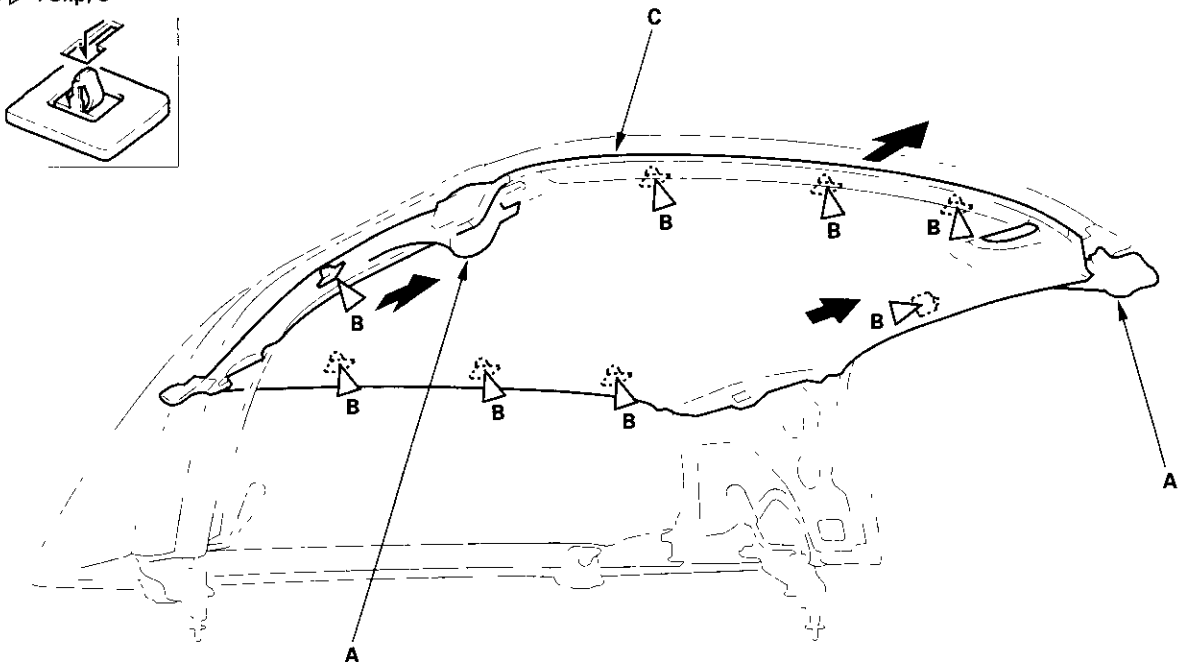


3. Release the clips (B) by sliding the headliner (C) forward, then remove the headliner.

4. Install the headliner in the reverse order of removal, and check that the clip portions are securely attached to the roof.

# Roof Molding Replacement

NOTE:
- Put on gloves to protect your hands.
- To remove and install the roof molding, remove the roof from the body.
- Take care not to scratch the roof.
- Use a clip remover to remove the clip.
- If the old retainer is to be installed, scribe a line around the mounting screws before removing the retainer.

## Removal

Remove the rear pillar trim (see page 20-55), then remove the roof molding as shown.

**Fastener Locations**

A ▷ : Clip, 1  B ▶ : Screw, 1  C ▶ : Screw, 3  D ▶ : Screw, 4 (Silver)  E ▶ : Screw, 1 ☆  F ▶ : Nut, 2

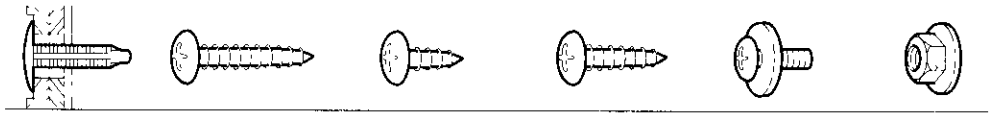

☆: CORROSION RESISTANT SCREW

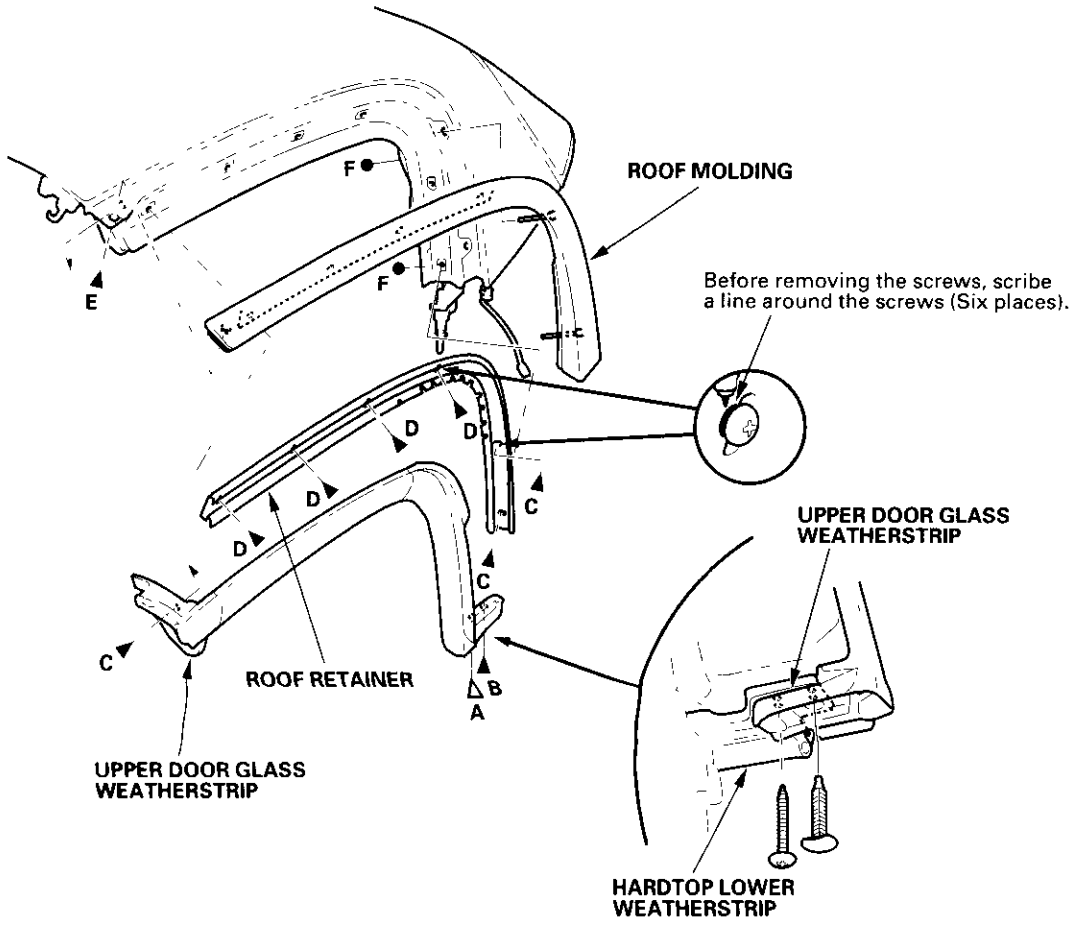


(cont'd)

## Roof Molding Replacement (cont'd)

### Installation

Install the roof molding in the numbered sequence, and note these items:

- Before reinstalling the roof molding, clean the roof surface where the sealant will be applied.
- When reinstalling the retainer, align it with the marks for the original positions.
- Check that the weatherstrip is securely installed to the retainer.
- Check that the door glass contacts the weatherstrip evenly. If necessary, adjust the retainer.
- Check for water leaks (see step 11 on page 20-66).

**Fastener Locations**

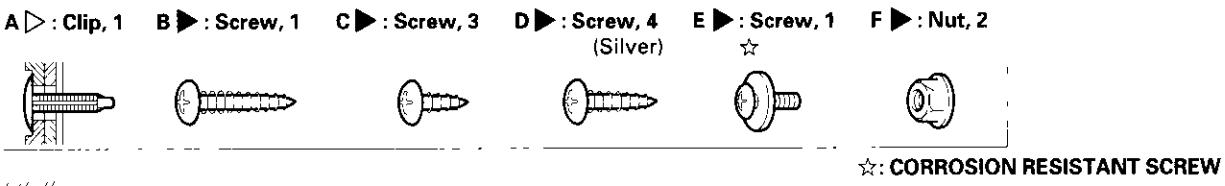


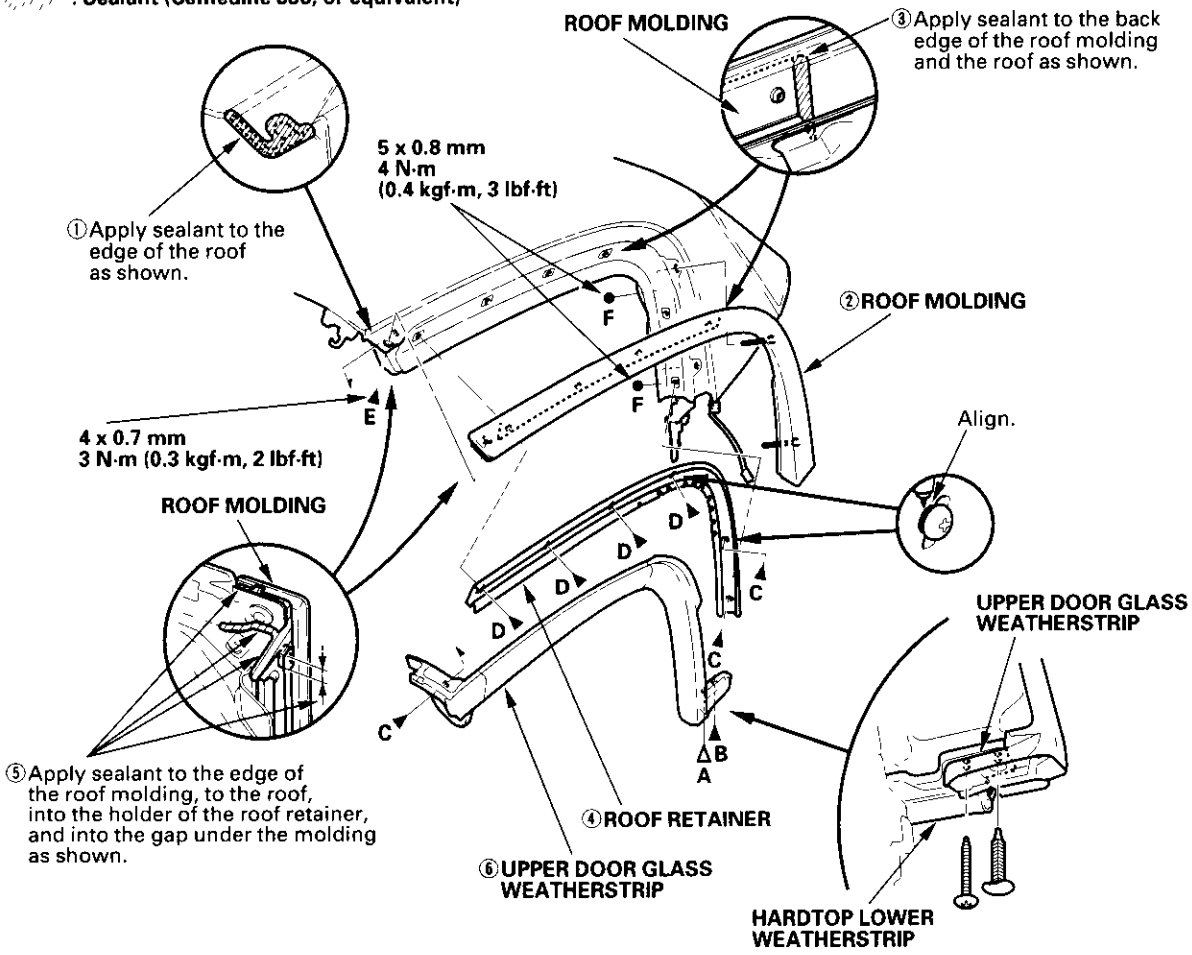

## Weatherstrip Check

NOTE:
- Make sure the hardtop is locked securely with both lock handles and both roof side locks.
- Check that the weatherstrip is securely installed to the retainer.
- Raise the glass fully.
- Check that the door glass contacts the weatherstrip evenly.
- Check for water leaks (see step 11 on page 20-66).

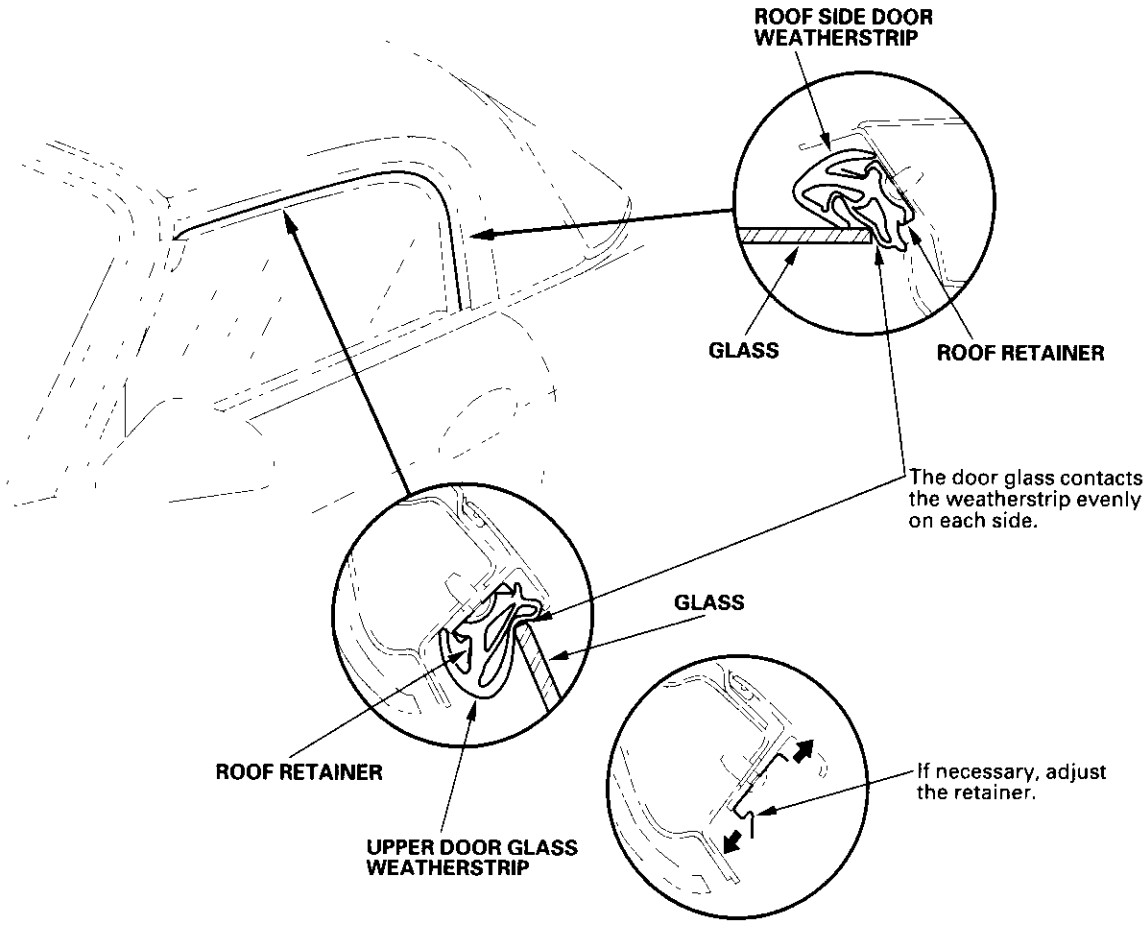

## Hardtop Lower Weatherstrip Replacement

NOTE:
- To remove and install the hardtop lower weatherstrip, remove the roof from the body.
- Take care not to scratch the roof.
- Use a clip remover to remove the clips.

1. Remove the rear window lower trim (see page 20-55).
2. Remove the hardtop lower weatherstrip as shown.
3. Install the weatherstrip in the reverse order of removal, and note these items:
   - Before installing the weatherstrip, clean the roof bonding surface with alcohol.
   - If the old weatherstrip is to be installed, scrape off the double-faced adhesive tape, then clean the weatherstrip surface with alcohol. Glue the new double-faced adhesive tape (3M 5304, or equivalent) to the weatherstrip.
   - Replace any damaged clips.
   - Before installing the weatherstrip, fold the edge of the adhesive backing from the double-faced adhesive tape. After installing the weatherstrip, carefully pull the adhesive backing away.
   - Press the double-faced adhesive tape portion to make the adhesive stick.

**Fastener Locations**

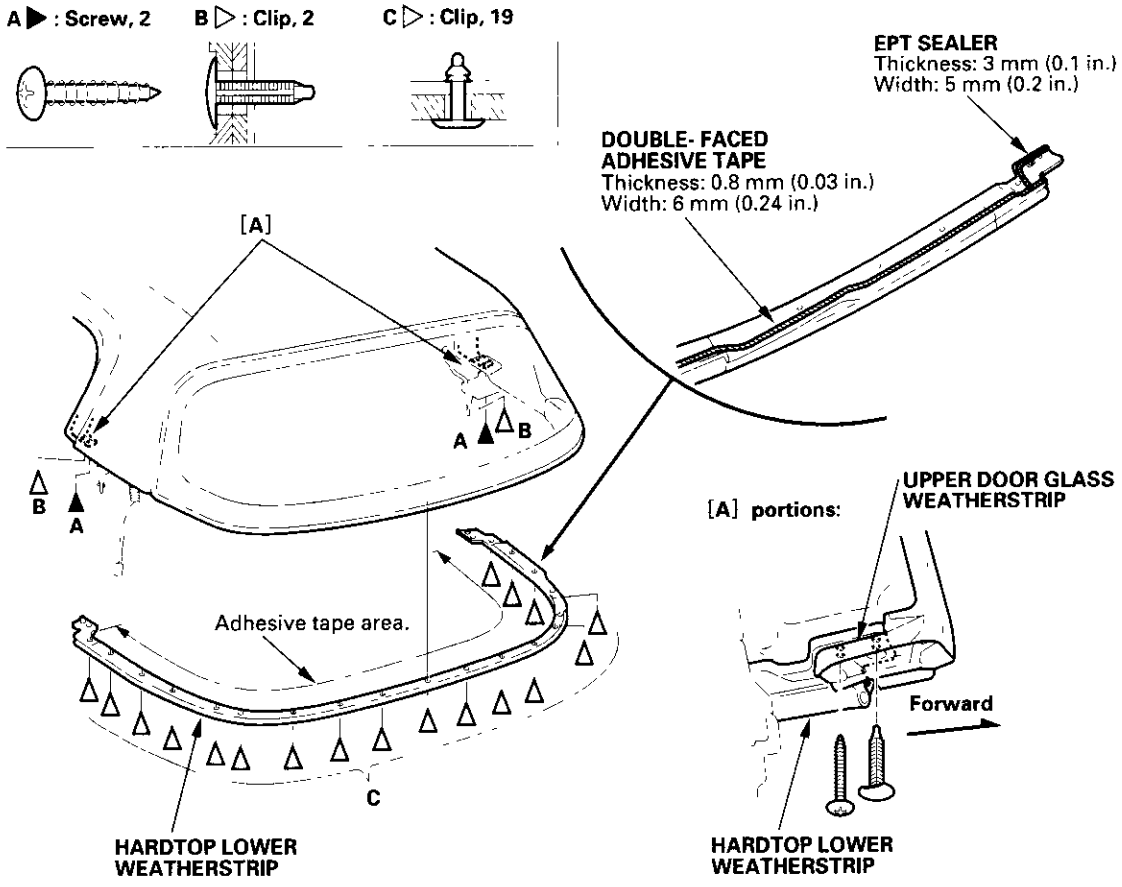

## Roof Front Trim Replacement

NOTE:
- To remove and install the roof front trim, remove the roof from the body.
- Take care not to scratch the roof.

1. Scrap off all traces of the old trim, then clean the roof bonding surface with a sponge dampened in alcohol. After cleaning, keep oil, grease, and water from getting on the surface.

2. Apply primer (3M N-200, or equivalent) to the areas where the roof front trim will be applied.

3. Apply the roof front trim (A and B):

   –1 Peel the adhesive backing (C) from the front edge of the trim.
   –2 Center and fit the trim against the roof.
   –3 Apply the trim to the roof while peeling the remaining adhesive backing (D) from it a little at a time. Check that the trim is parallel and free of wrinkles.
   –4 Remove the application tape.

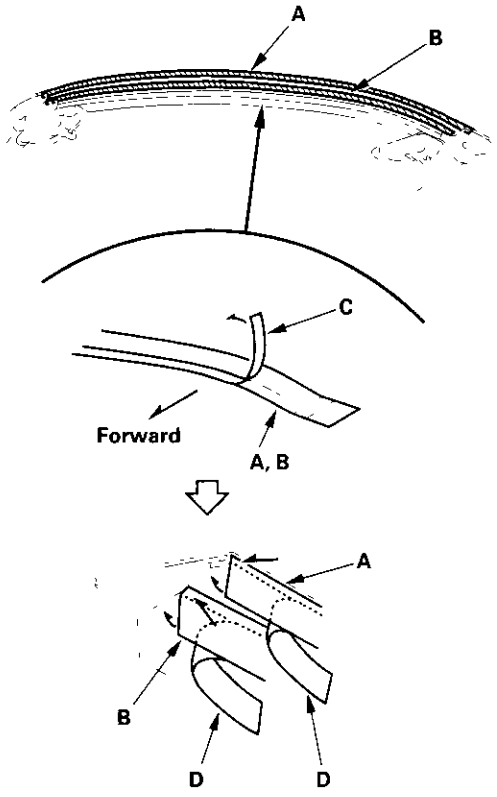


## Hardtop Lock Handle Replacement

NOTE:
- To remove and install the hardtop lock handle, remove the roof from the body.
- Take care not to scratch the headliner.

1. Remove the hardtop lock handle as shown.

2. Install the handle in the reverse order of removal, and note these items:

   - Apply multipurpose grease to the springs and the moving portions.
   - Apply liquid thread lock to the thread of the (A) screw before reinstallation.

**Fastener Locations**

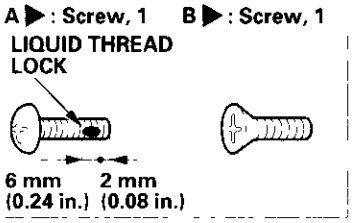


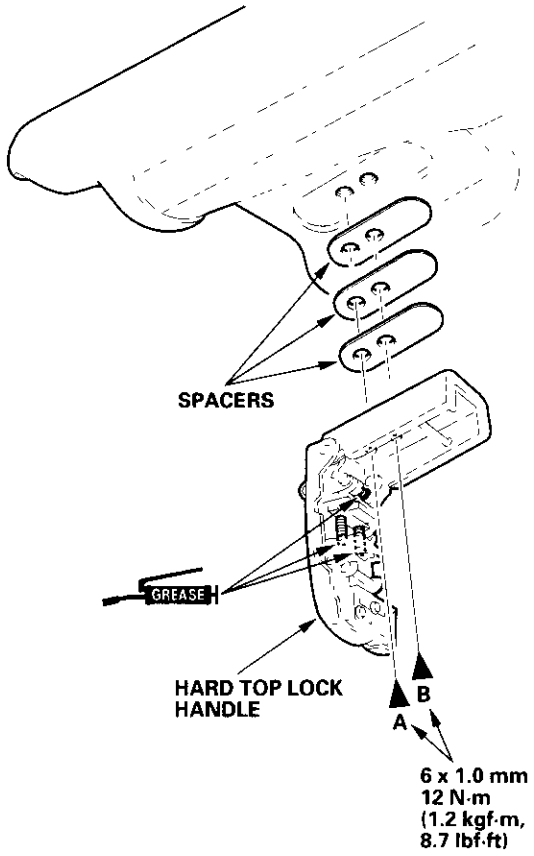

## Roof Side Lock Replacement

NOTE:
- Put on gloves to protect your hands.
- To remove and install the roof side lock, remove the roof from the body.
- Take care not to scratch the roof.
- If the old lock is to be installed, scribe a line around the mounting bolts before removing the lock.

1. Remove the B-pillar trim (see page 20-55).

2. Remove the roof side lock as shown.

3. Install the lock in the reverse order of removal, and note these items:

   - If the old lock is to be installed, align the lock with the marks for the original position.
   - Apply multipurpose grease to the springs and the moving portions.
   - If necessary, adjust the lock alignment; refer to the roof position adjustment (see page 20-65).

**Fastener Locations**

**A ▶: Bolt, 3**

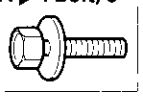

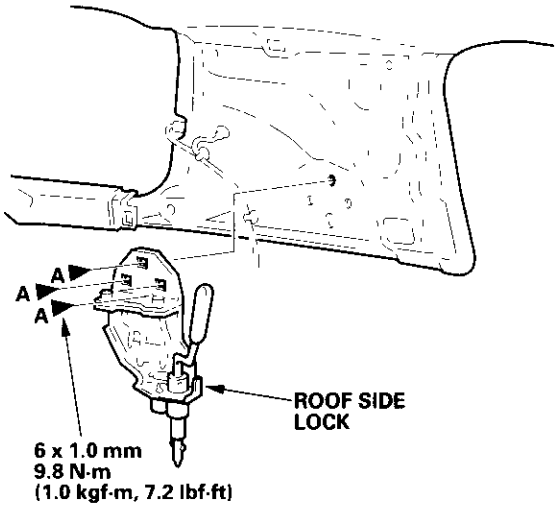


**Grease Application**

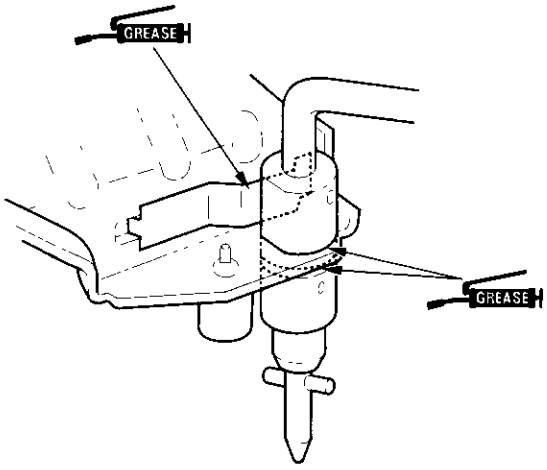

## Hardtop Striker Replacement

NOTE:
- To remove and install the hardtop striker, remove the roof from the body.
- Take care not to scratch the interior parts.

1. Remove the windshield header interior trim (see page 20-68).
2. Remove the hardtop striker as shown.
3. Install the striker in the reverse order of removal.

**Fastener Locations**

**A ▶ : Screw, 2**

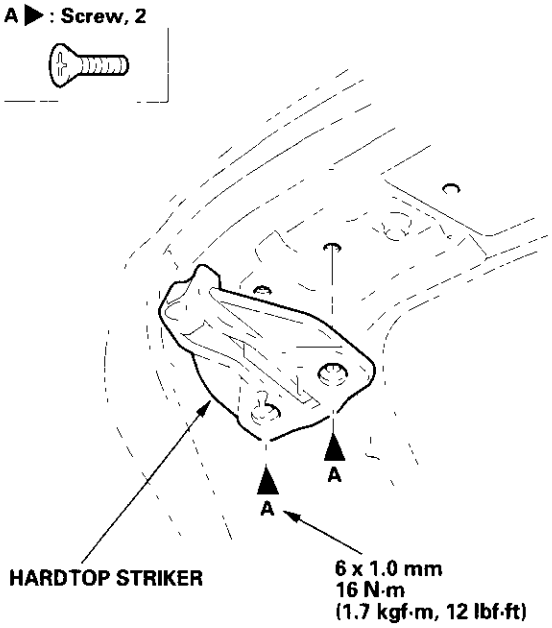


## Body Side Catch Assembly Replacement

NOTE: Put on gloves to protect your hands.

1. Remove the roof from the body. Take care not to bend or scratch the trim and panels.
2. Remove the rear side tirm (see page 20-70).
3. On left side, detach and disconnect the connector (A), then detach the harness clip (B).

**Fastener Locations**

**C ▶ : Bolt, 2 D ▶ : Bolt, 2**

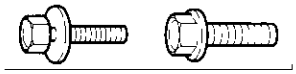

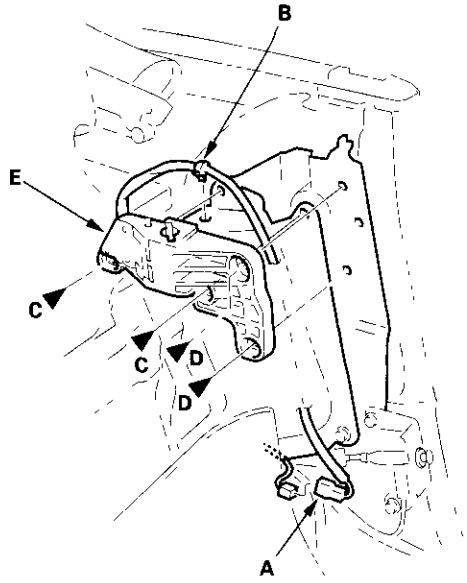


4. Remove the bolts (C, D), then remove the body side catch assembly (E).

(cont'd)

## Body Side Catch Assembly Replacement (cont'd)

5. Remove the lower clip (A) fastening the B-pillar outer weatherstrip (B) from outside of the front door opening. Make sure the center of the clip hole aligns with the center of the hole in the convertible top frame (C). If necessary, loosen the mounting bolt (D), and move the convertible top frame slightly until the holes align. Then tighten the bolt, and install the clip.

**Fastener Locations**

**G ▶ : Bolt, 2  H ▶ : Bolt, 2**

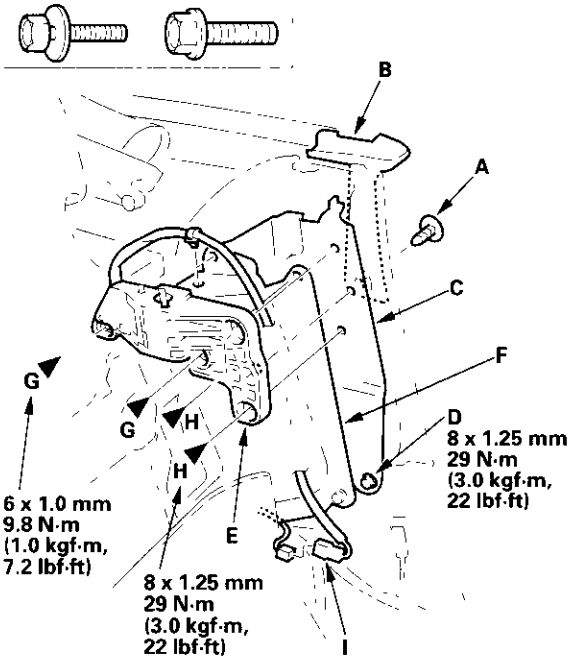


6. Grease the catch.

7. Reinstall the catch assembly (E) on the corner gusset (F) and the convertible top frame; tighten the bolts (G, H). On left side, reconnect the connector (I).

8. Reinstall all of the removed parts.

## Body Side Catch Replacement

1. Remove the body side catch assembly from the body (see page 20-63).

2. Remove the body side catch as shown.

3. Install the catch in the reverse order of removal, and note these items:

   - Apply multipurpose grease to each location as indicated by the arrows.
   - Apply liquid thread lock to the screw before reinstallation.

**Fastener Location**

**A ▶ : Screw, 1**

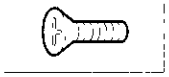

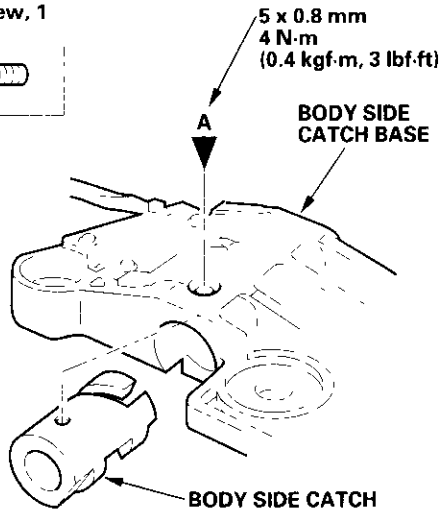


**Grease Application**

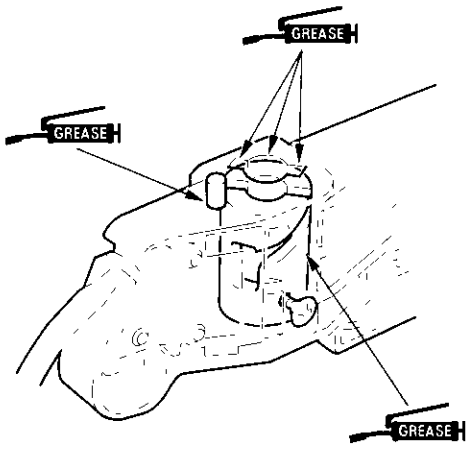

## Roof Position Adjustment

NOTE: Have an assistant help you adjust the roof position.

1. Remove the B-pillar trim from both sides (see page 20-55), and make sure both lock handles (A) and roof side locks(B) are unlocked.

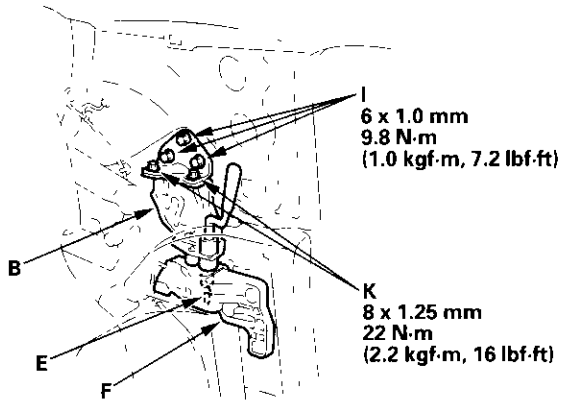


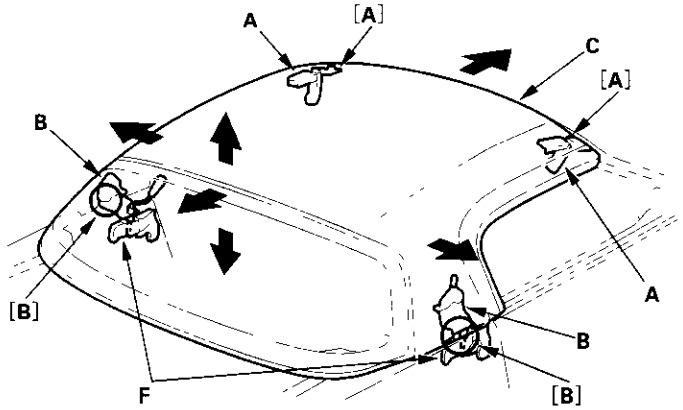


Measuring Point [A]

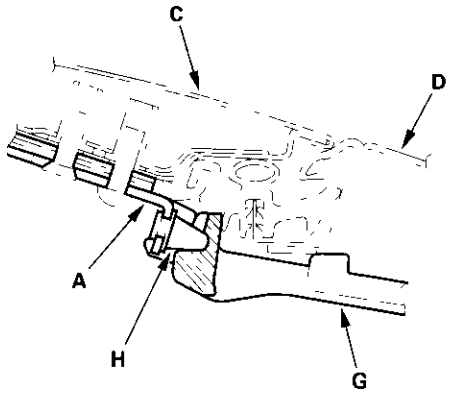


Measuring Point [B]

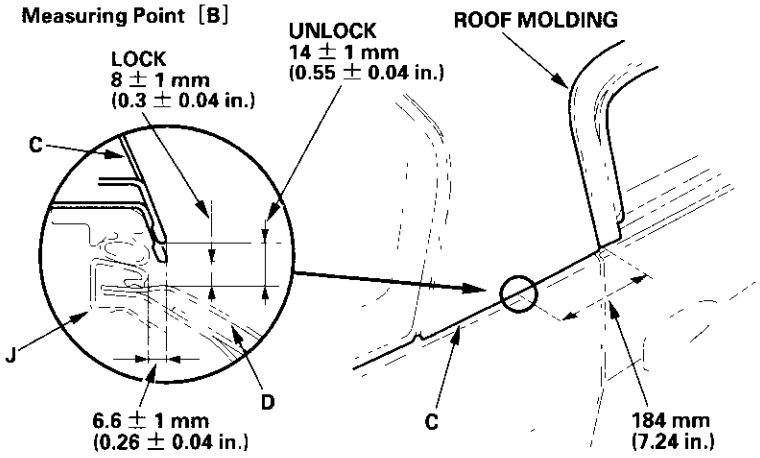


2. Set the roof (C) onto the body (D):

   - Make sure the lock pins (E) of both roof side locks are securely inserted into the body side catches (F).
   - Make sure the rear window defogger harnesses are not pinched.

3. Adjust the roof alignment:

   -1 Check that there is no clearance between the striker (G) and the boss (H) of the lock handle at the measuring points (A), and check that the clearance is within specification at the measuring points [B] on the bottom of both rear pillars.
   -2 To fit the boss into the striker, and to adjust the vertical clearance to the specification, loosen the roof side lock mounting bolts (I), then move the roof up or down, as well as, forward and rearward.
   -3 To adjust the horizontal clearance between both side edges of the roof and the rear tray opening molding (J) to the specification, loosen the holder plate mounting bolts (K), then move the roof to the right or left.
   -4 Fasten both roof side locks.
   -5 Lock the roof securely with both lock handles and roof side locks.
   -6 Recheck the roof alignment.

(cont'd)

## Roof Position Adjustment (cont'd)

4. If the roof alignment is still not within specification, unlock the roof, and repeat the preceding steps.
5. If the roof alignment is not within specification, check the body side catches, and check for body deformation.
6. Lock the roof (A) securely with both lock handles (B) and roof side locks (C). Check the level difference between the roof and body (D) at the measuring point [A] . If the difference is not within specification, remove the roof from the body, and adjust the difference with the spacers (E) that are installed between the lock handle and the roof.

**SPACER: Thickness= 1 mm (0.04 in.)**
**Number= Three pieces (standard)**

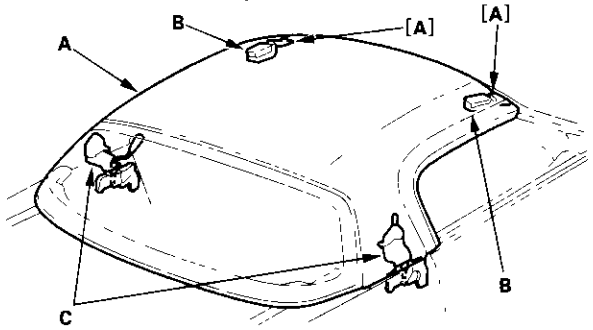


**Measuring Point [A] :**

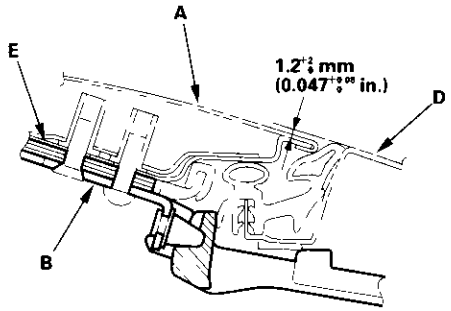


7. Set the roof onto the body, and lock it securely. Check that the weatherstrip fits flush, and check that each door glass contacts the weatherstrip evenly. If necessary, adjust the retainer; refer to the roof molding replacement (see page 20-57).
8. Remove the roof from the body, and reinstall the B-pillar trim on the roof.
9. Set the roof onto the body, and lock it securely. Reconnect the rear window defogger connectors securely.
10. Make sure that the roof is locked securely, then raise the door glass fully, and close the doors.
11. Check for water leaks. Run water over the roof and on the sealing area as shown, and note these items:

- Use a 12 mm (1/2 in.) diameter hose (A).
- Adjust the rate of water flow (B).
- Do not use a nozzle.
- Hold the hose about 200 mm (7.9 in.) away from the door.

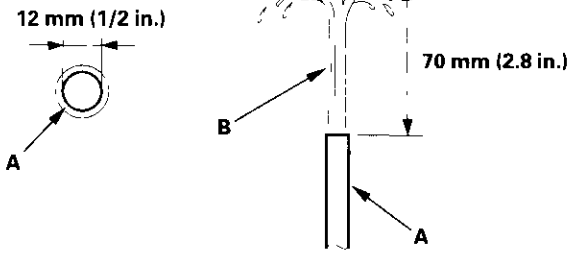


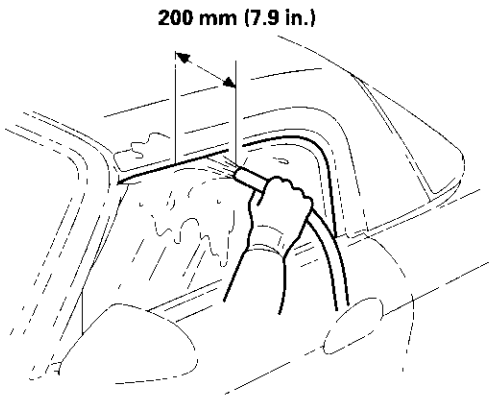

## Component Location Index

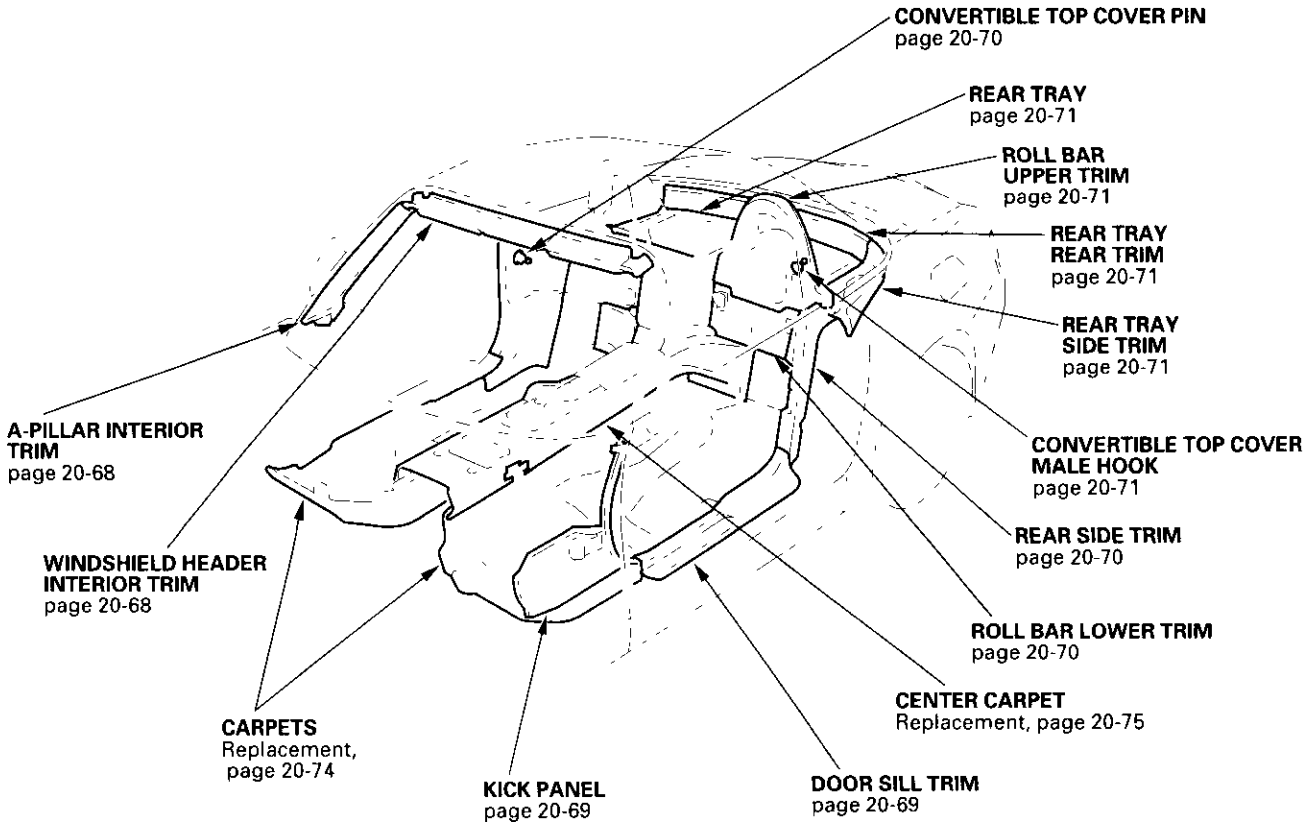


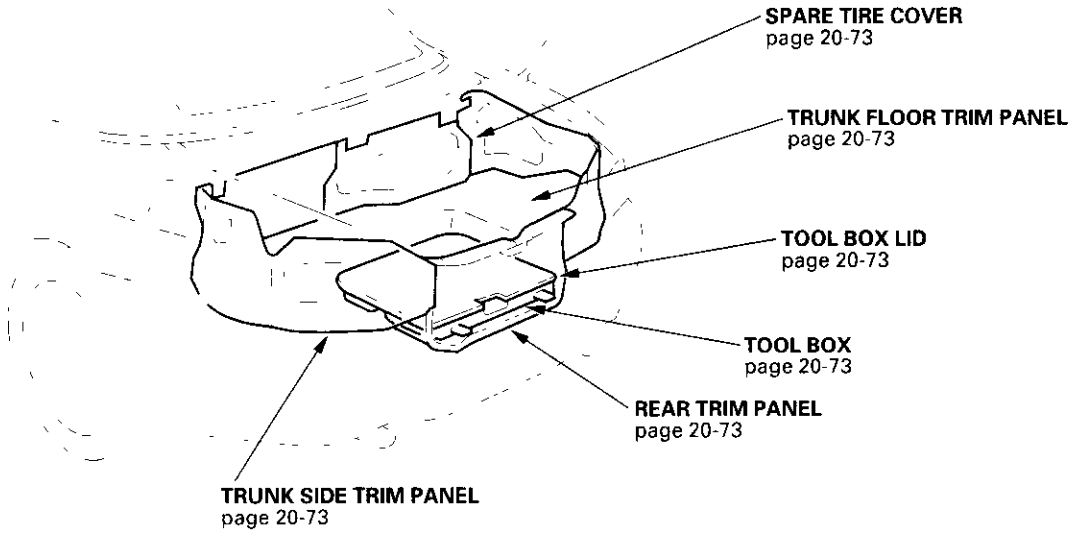

## Trim Removal/Installation - Front Roof Area

NOTE:
- Put on gloves to protect your hands.
- When prying with a flat-tip screwdriver, wrap it with protective tape to prevent damage.
- Take care not to bend or scratch the trim and panels.

1. Remove the trim in numbered sequence.

2. Install the trim in the reverse order of removal, and note these items:

   - Replace any damaged clips.
   - Make sure the connector is plugged in properly.
   - Push the clip portions into place securely.
   - If the threads on the visor screws are worn out, use an oversized screw (P/N 90132-SZ3-0030) made specifically for this application.

**Fastener Locations**

**A ▶ : Screw, 2** **B ▶ : Screw, 2** **C ▷ : Clip, 4** **D ▷ : Clip, 2**

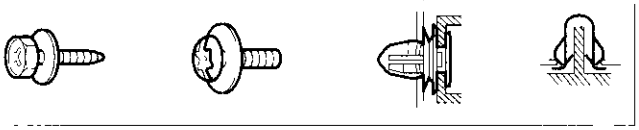

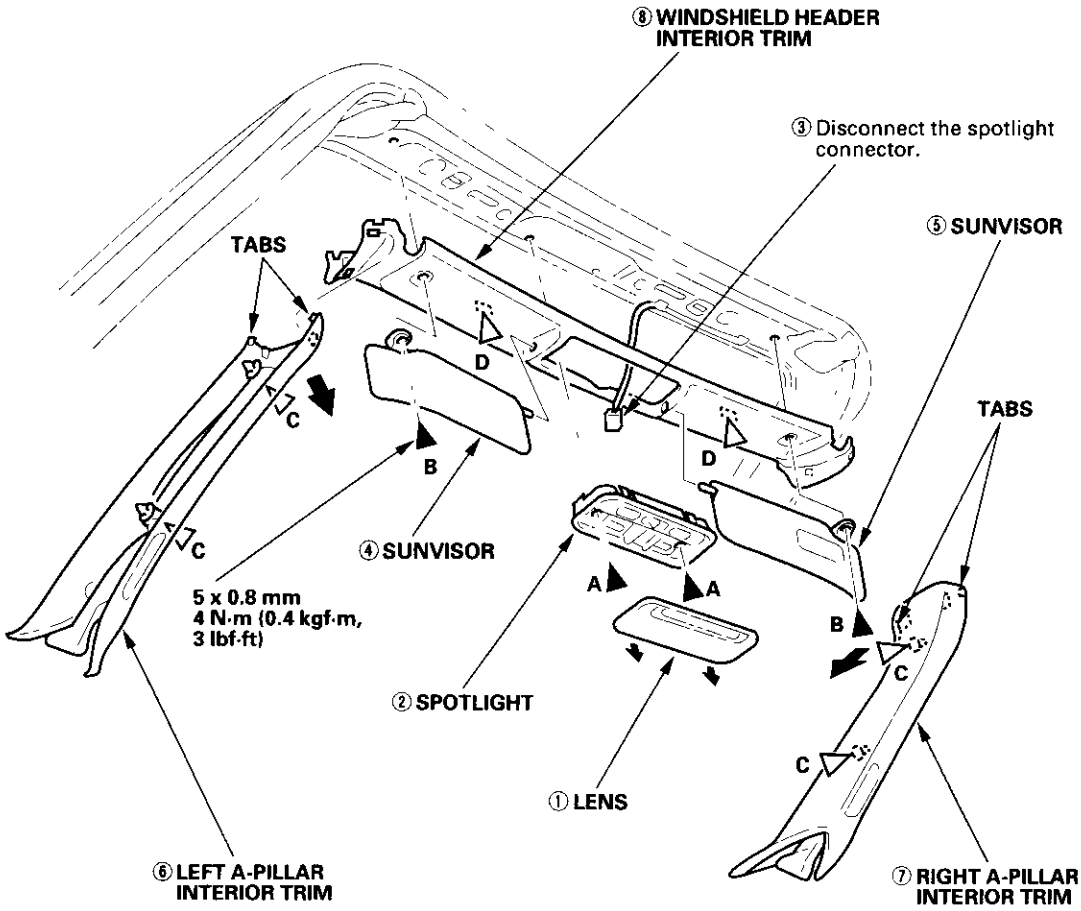

# Trim Removal/Installation - Door Area

NOTE:
- Put on gloves to protect your hands.
- When prying with a flat-tip screwdriver, wrap it with protective tape to prevent damage.
- Take care not to bend or scratch the trim and panels.

1. Remove the trim as shown.

2. Install the trim in the reverse order of removal, and note these items:

   - Replace any damaged clips.
   - Push the clip portions into place securely.

**Fastener Locations**

**A ▷ : Clip, 3** **B ▷ : Clip, 1** **C ▷ : Clip, 1** **D ▷ : Clip, 1**

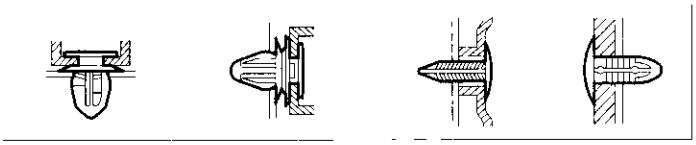

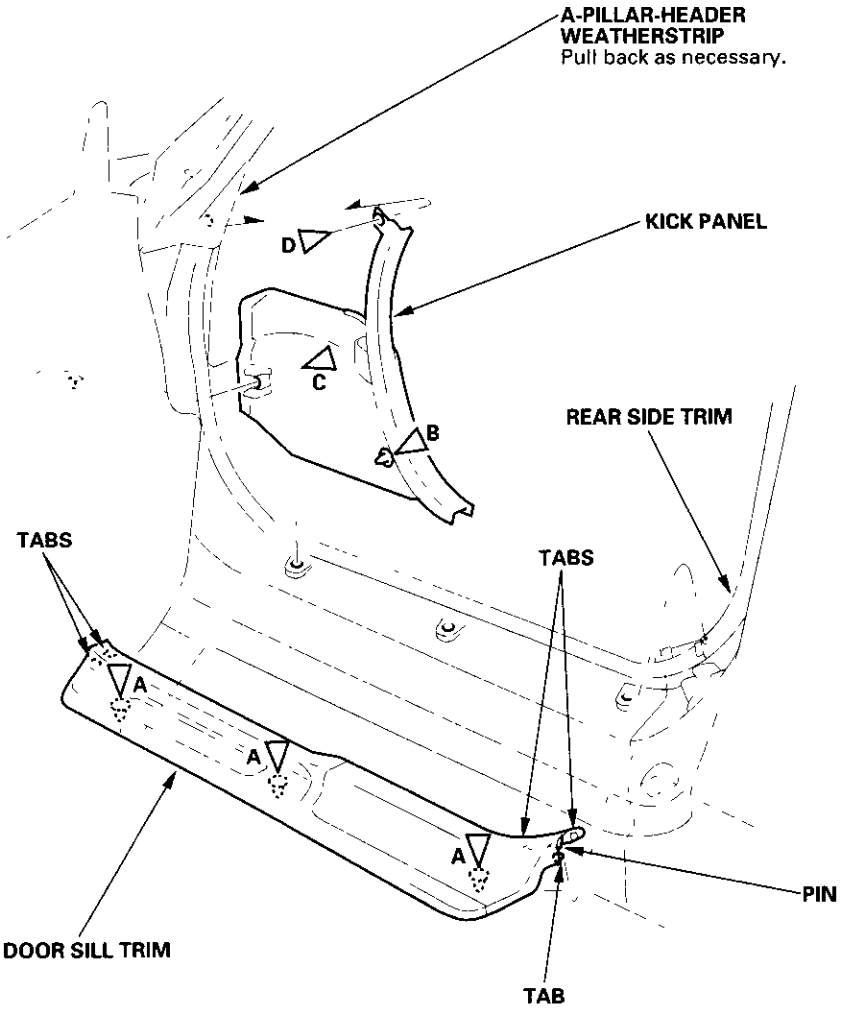

## Trim Removal/Installation - Seat Side Area

NOTE:
- Put on gloves to protect your hands.
- When prying with a flat-tip screwdriver, wrap it with protective tape to prevent damage.
- Take care not to bend or scratch the trim and panels.

1. Remove the door sill trim (see page 20-69).

2. Remove the trim as shown.

3. Install the trim in the reverse order of removal, and note these items:

   - Replace any damaged clips.
   - Push the clip portions securely into place.
   - With removable hardtop: Make sure the rear window defogger connector is plugged in properly (left side only).

**Fastener Locations**

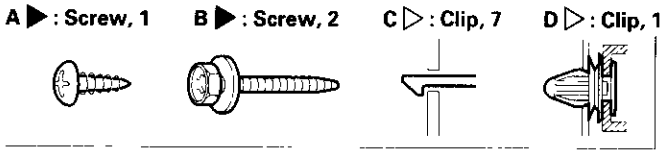

# Trim Removal/Installation - Rear Tray Area

NOTE:
- Put on gloves to protect your hands.
- When prying with a flat-tip screwdriver, wrap it with protective tape to prevent damage.
- Take care not to bend or scratch the top cloth, rear window, trim and panels.

1. Remove the trim in numbered sequence.

2. Install the trim in the reverse order of removal, and note these items:

   - Replace any damaged clips.
   - Apply liquid thread lock to the anchor bolts before reinstallation.
   - Before installing the anchor bolts, make sure there are no twists or kinks in the seat belt.
   - Push the clip portions into place securely.

**Fastener Locations**

**A ▷ : Clip, 4** **B ▷ : Clip, 7**

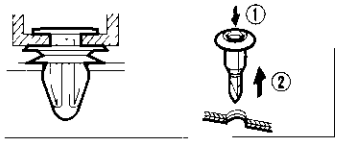




(cont'd)

## Trim Removal/Installation - Rear Tray Area (cont'd)

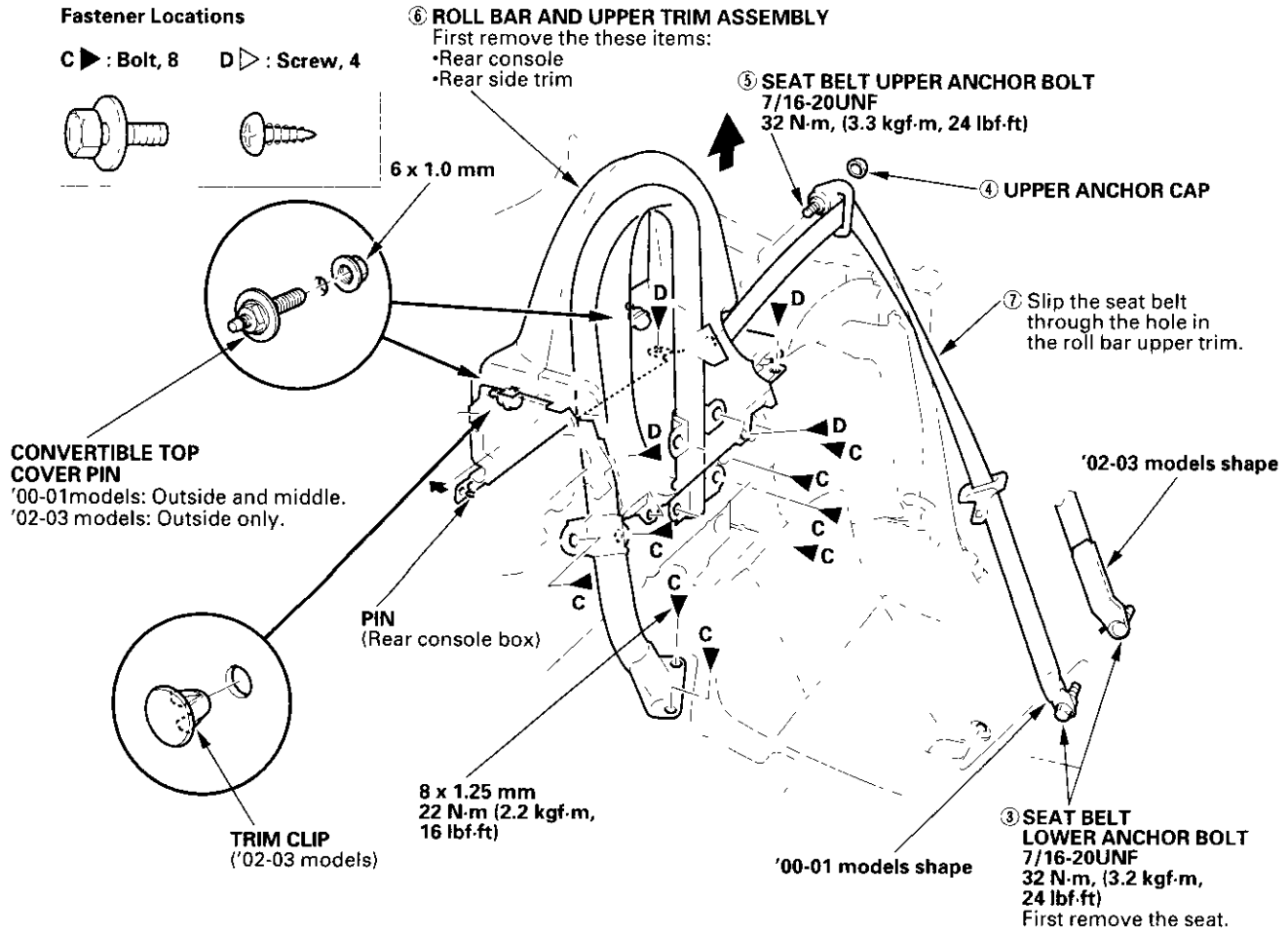


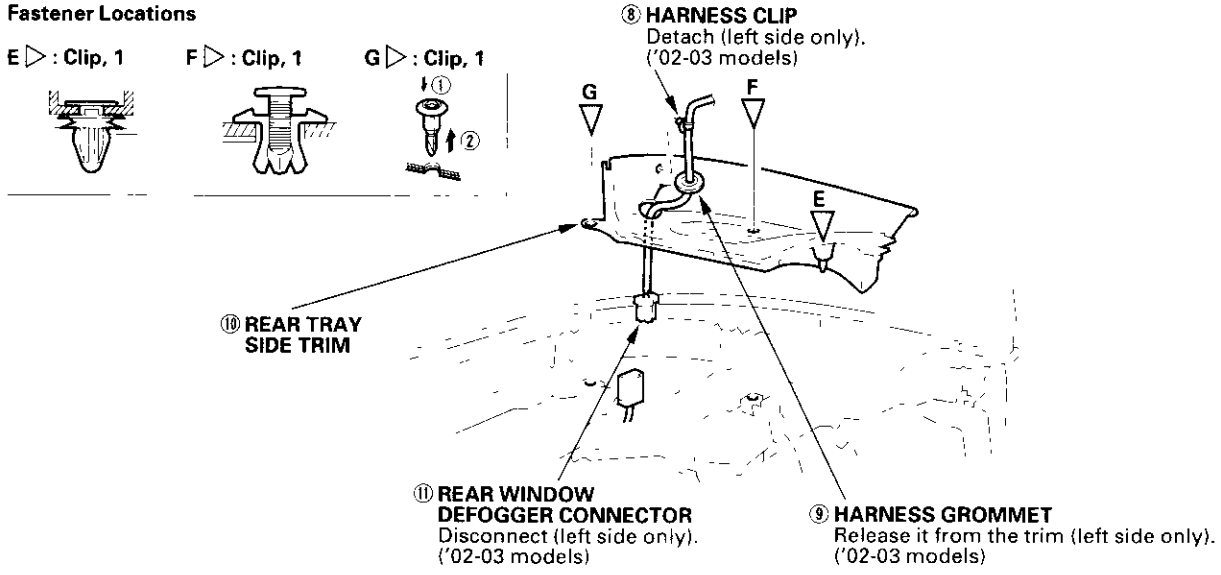

# Trim Removal/Installation - Trunk Area

NOTE:
- Put on gloves to protect your hands.
- When prying with a flat-tip screwdriver, wrap it with protective tape to prevent damage.
- Take care not to bend or scratch the trim and panels.

1. Remove the trim as shown.

2. Install the trim in the reverse order of removal, and note these items:

   - Replace any damaged clips.
   - Push the clips into place securely.

**Fastener Locations**

A ▷ : Clip, 18  B ▷ : Clip, 4  C ▷ : Clip, 3

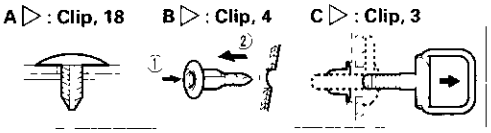

## Carpet Replacement

NOTE:
- Put on gloves to protect your hands.
- Take care not to damage, wrinkle, or twist the carpets.
- Be careful not to damage the dashboard or other interior trim pieces.

1. Remove these items, then remove the carpet as shown:

   - Seat (see page 20-86)
   - Kick panel (see page 20-69)
   - Front console cover (see page 20-81)
   - Rear side trim (see page 20-70)

2. Install the carpet in the reverse order of removal, and note these items:

   - Make sure the seat harness is routed correctly.
   - Replace any damaged clips.
   - Apply liquid thread lock to the anchor bolt and seat mounting bolts before reinstallation.
   - Before installing the lower anchor bolts, make sure there are no twists or kinks in the seat belts.
   - Push the clips into place securely.

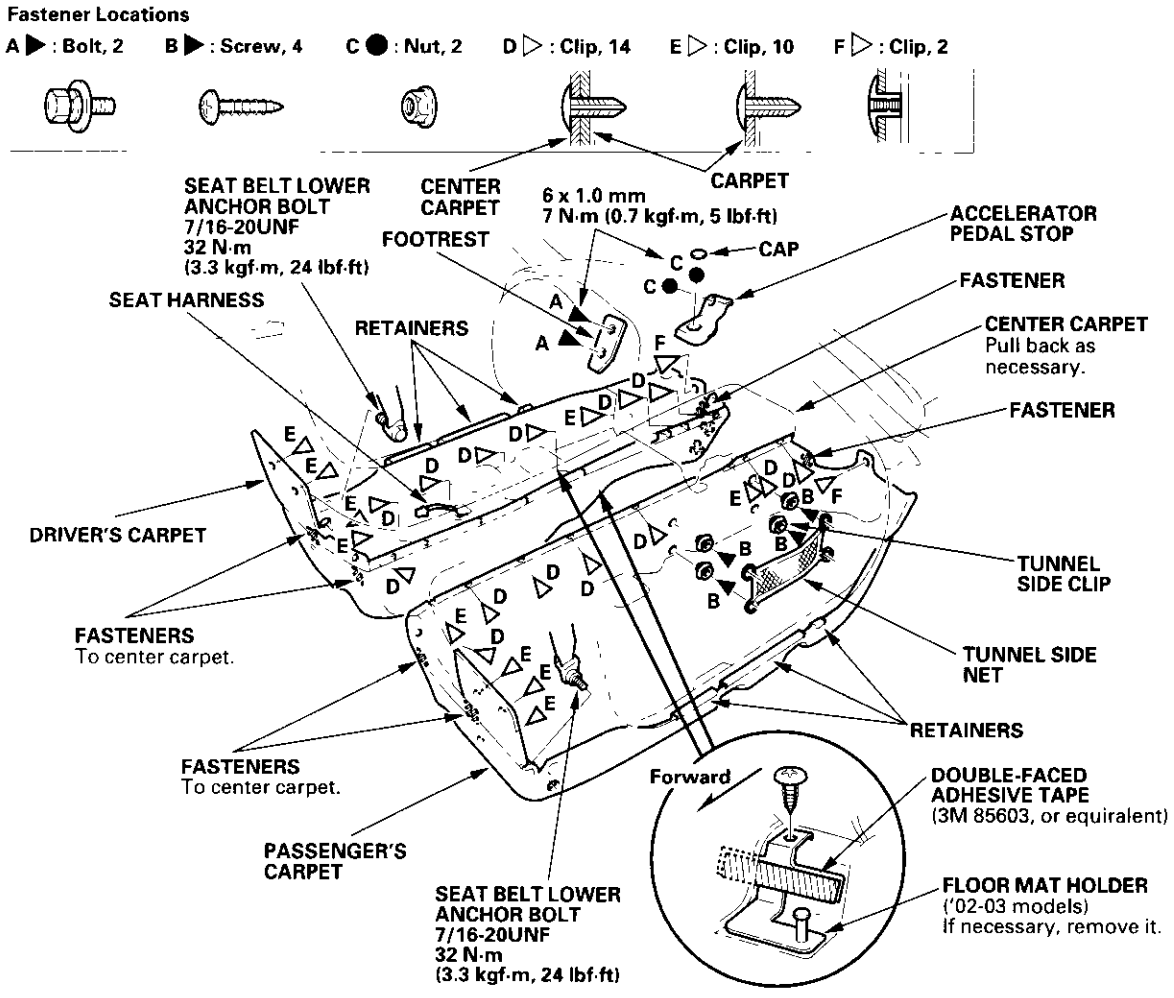

## Center Carpet Replacement

SRS components are located in this area. Review the SRS component locations (see page 23-9) and the precautions and procedures (see page 23-10) in the SRS section before performing repairs or service.

NOTE:
- Put on gloves to protect your hands.
- Take care not to damage, wrinkle, or twist the carpet.
- Be careful not to damage the dashboard or other interior trim pieces.
- Before disconnecting the negative cable from the battery, make sure you have the anti-theft code for the radio, then writedown the frequecies for the radio's preset buttons.
- Disconnect the negative cable from the battery, and wait at least 3 minutes before beginning work.

1. Remove these items, then remove the center carpet as shown:

   - Dashboard (see page 20-82)
   - Rear console (see page 20-78)
   - The harness clips securing the SRS wire harness and steering hanger beam wire harness.
   - Cut the carpet in the areas shown.

2. Install the center carpet in the reverse order of removal, and note these items:

   - Make sure the SRS wire harness and steering hanger beam wire harness are routed correctly, and clipped into place.
   - Replace any damaged clips.
   - Push the clips into place securely.
   - Refasten the cut areas with wire ties.
   - Reconnect the negative cable to the battery.
   - Enter the anti-theft code for the radio, then enter the customer's radio station presents.
   - Reset the clock.
   - Do the PCM idle learn procedure (see page 11-100).

**Fastener Locations**

**A ▶ : Bolt, 2  B ▷ : Clip, 14  C ▷ : Clip, 2**

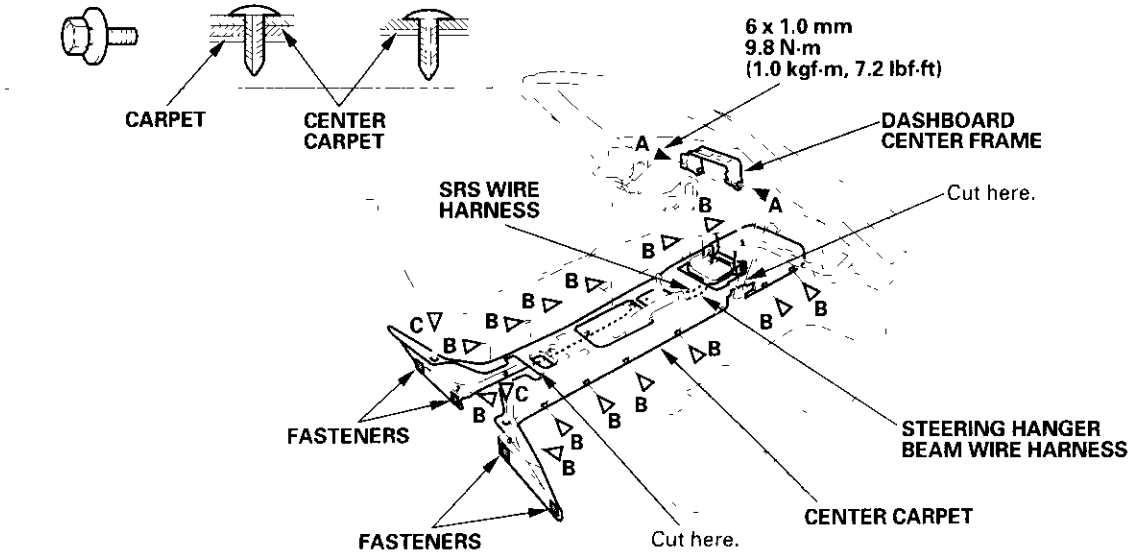

## Center Console Removal/Installation

NOTE:
- When prying with a flat-tip screwdriver, wrap it with protective tape to prevent damage.
- Take care not to scratch the front seat, dashboard and related parts.
- Remove the shift knob by turning it counterclockwise.

1. Remove the center console as shown.

2. Install the center console in the reverse order of removal, and note these items:

   - Replace any damaged clips.
   - Make sure the connectors are plugged in properly.
   - Push the clip portions into place securely.
   - Install the shift knob in numbered sequence.

**Fastener Locations**

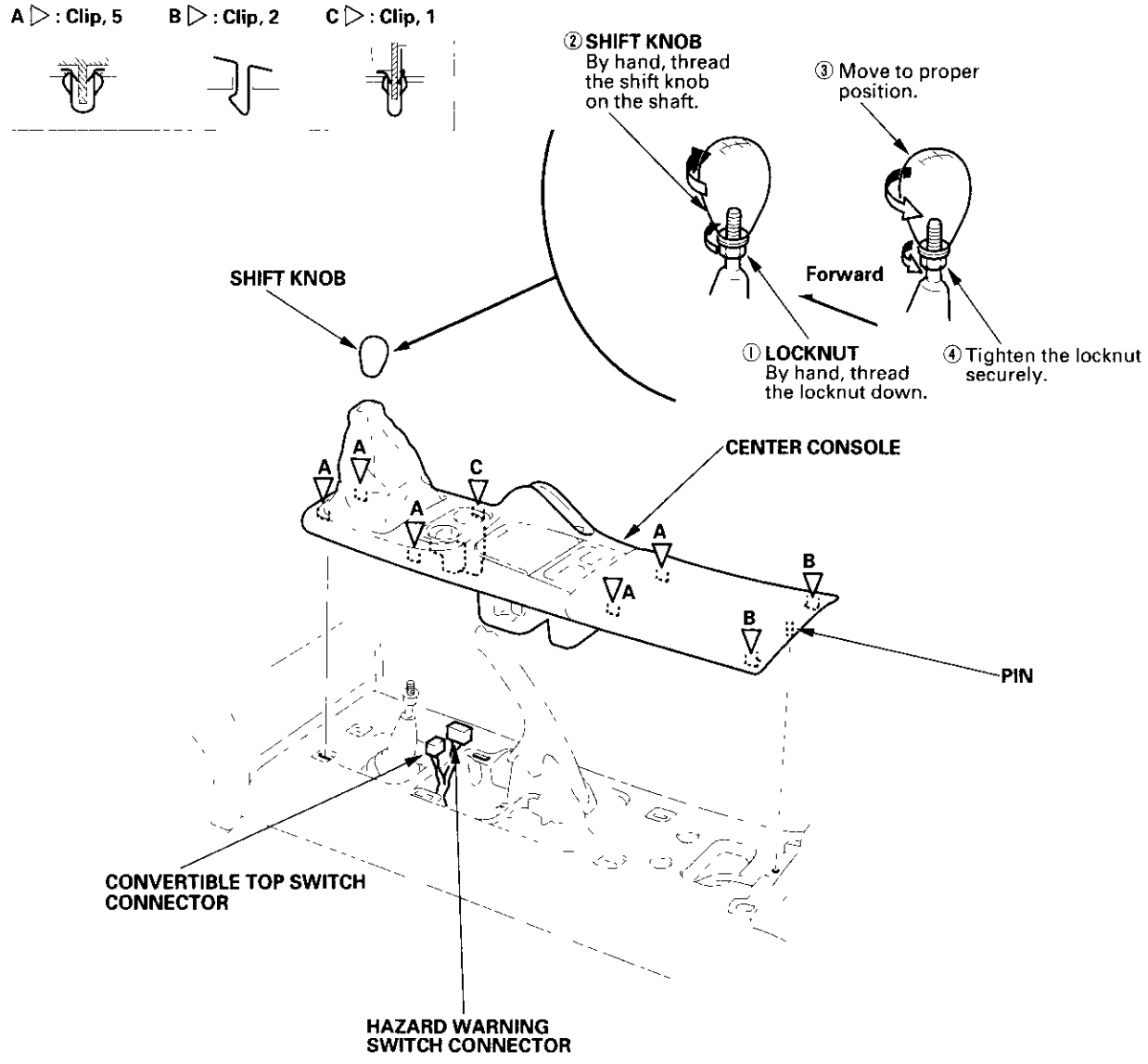

# Wind Deflector Replacement

## '01-03 Models

NOTE:
- When prying with a flat-tip screwdriver, wrap it with protective tape to prevent damage.
- Take care not to scratch the rear console upper lid and related parts.

1. Remove the wind deflector as shown.

2. Install the wind deflector in the reverse order of removal.

   - Apply liquid thread lock to the thread of the A screws before reinstallation.
   - Make sure the caps are installed securely onto the screws.

**Fastener Locations**

**A ▶ : Screw, 2**

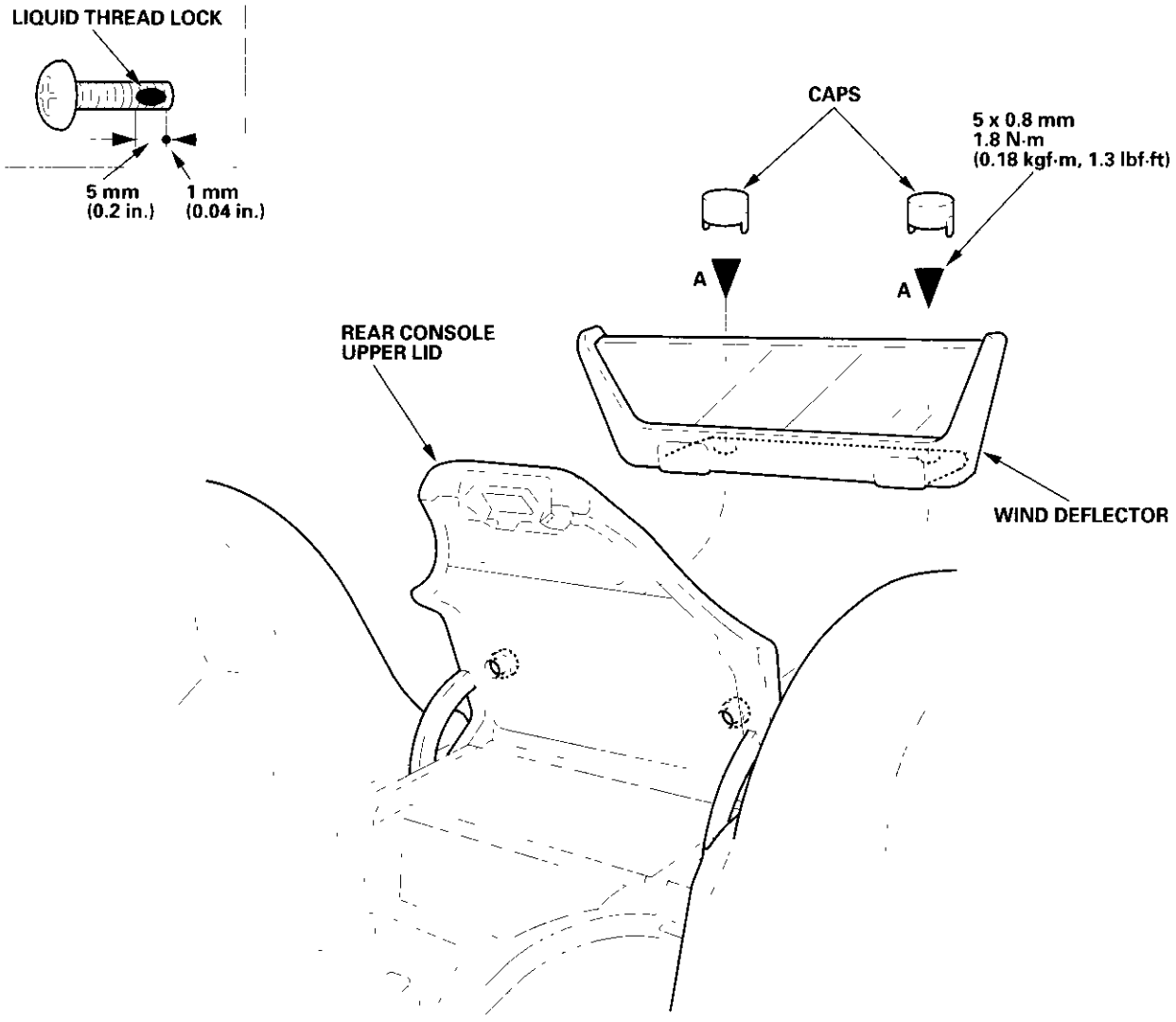

## Rear Console Removal/Installation

NOTE:
- When prying with a flat-tip screwdriver, wrap it with protective tape to prevent damage.
- Take care not to scratch the front seat and related parts.

1. Remove these items:
   - Center console (see page 20-76)
   - Rear tray (see page 20-71)
   - Roll bar lower trim, both sides (see page 20-70)
2. Remove the rear console as shown.
3. Install the rear console in the reverse order of removal, and note these items:
   - Replace any damaged clips.
   - Make sure the connectors are plugged in properly.
   - Push the clip portions into place securely.

**Fastener Locations**

A ▶ : Screw, 4 B ▶ : Screw, 10

C ▷ : Clip, 5 D ▷ : Clip, 4

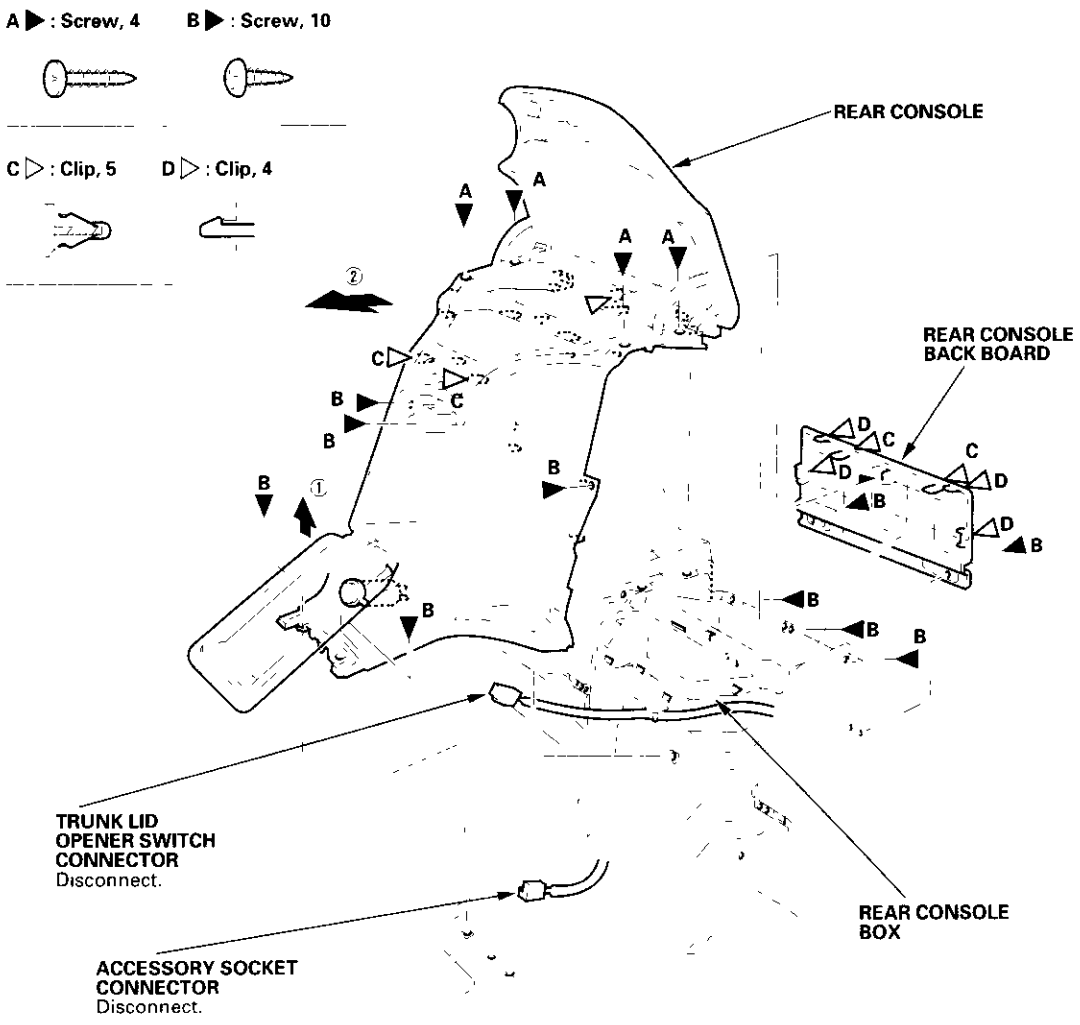

## Rear Console Box Replacement

NOTE: Take care not to scratch the front seat and related parts.

1. Remove these items, then remove the rear console box as shown:
   - Roll bar upper trim, both sides (see page 20-71)
   - Spare tire
2. Remove the rear console box as shown.
3. Install the rear console box in the reverse order of removal.

**Fastener Locations**

**A ▶ : Screw, 4**

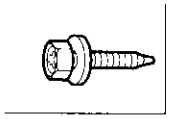

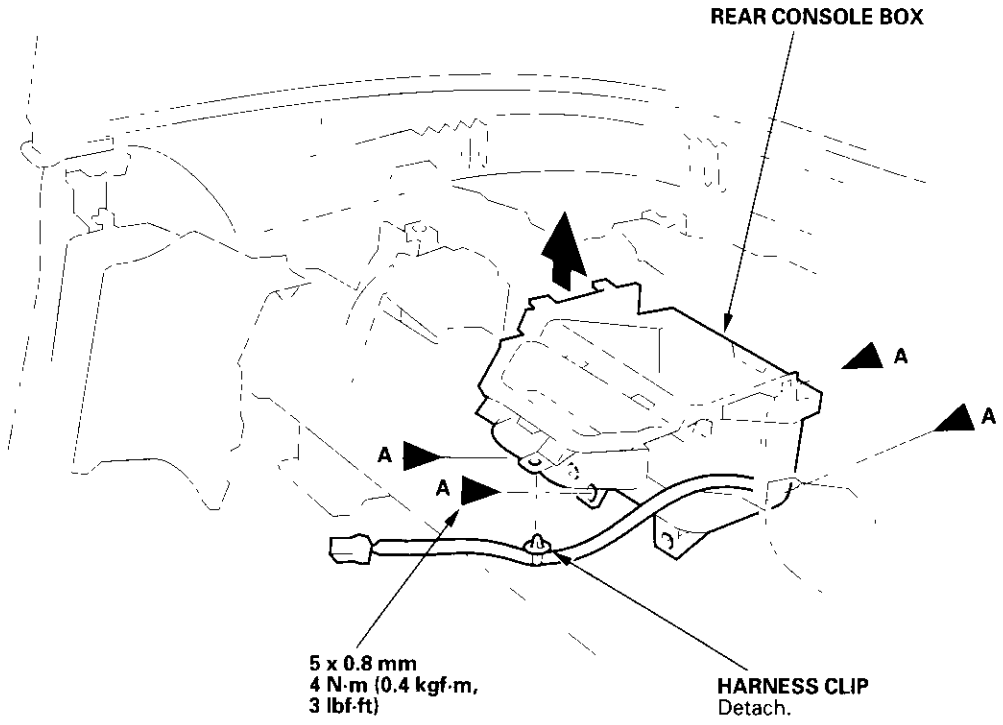

## Instrument Panel Removal/ Installation

NOTE:
- When prying with a flat-tip screwdriver, wrap it with protective tape, and apply protective tape around the related parts, to prevent damage.
- Take care not to scratch the dashboard and related parts.

1. Remove the instrument panel as shown.
2. Install the panel in the reverse order of removal, and note these items:
   - Replace any damaged clips.
   - Make sure the connectors are plugged in properly.
   - Push the clip portions into place securely.

**Fastener Locations**

**A ▶ : Screw, 2** **B ▷ : Clip, 2** **C ▷ : Clip, 4**

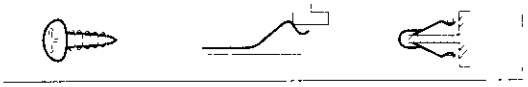

**D ▷ : Clip, 2** **E ▷ : Clip, 2**






## Radio Panel Removal/Installation

NOTE:
- When prying with a flat-tip screwdriver, wrap it with protective tape, and apply protective tape around the related parts, to prevent damage.
- Take care not to scratch the dashboard and related parts.

1. Remove the radio panel as shown.
2. Install the panel in the reverse order of removal, and note these items:
   - Replace any damaged clips.
   - Push the clip portions into place securely.

**Fastener Locations**

**A ▷ : Clip, 5** **B ▷ : Clip, 2**



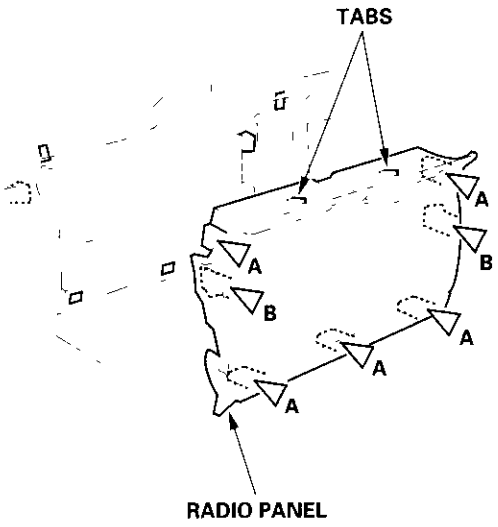

## Front Console Cover Removal/ Installation

NOTE:
- When prying with a flat-tip screwdriver, wrap it with protective tape, and apply protective tape around the related parts, to prevent damage.
- Take care not to scratch the dashboard and related parts.

1. Remove the front console cover as shown.
2. Install the cover in the reverse order of removal, and note these items:
   - Replace any damaged clips.
   - Push the clip portions into place securely.

**Fastener Locations**

**A ▶ : Screw, 1** **B ▷ : Clip, 2**



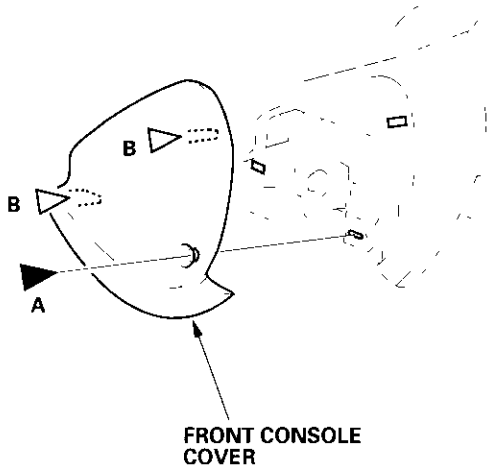


## Passenger's Dashboard Lower Cover Removal/Installation

NOTE:
- When prying with a flat-tip screwdriver, wrap it with protective tape, and apply protective tape around the related parts, to prevent damage.
- Take care not to scratch the dashboard and related parts.

1. Remove the passenger's dashboard lower cover as shown.
2. Install the cover in the reverse order of removal, and note these items:
   - Replace any damaged clips.
   - Push the clip portions into place securely.

**Fastener Locations**

**A ▷ : Clip, 6**

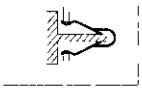

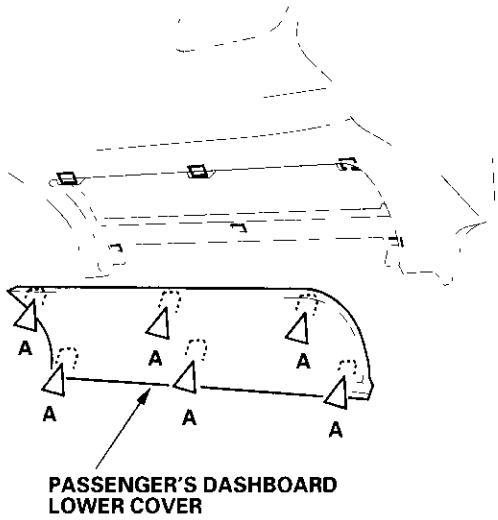

## Passenger's Side Vent Removal and Installation

1. Wrap a flat-tip screwdriver with protective tape, and apply protective tape around the related parts to prevent damage. Carefully insert a flat-tip screwdriver next to the clip (A), and detach the clips by prying on the passenger's side vent (B). Take care not to scratch the dashboard and related parts.

**Fastener Locations**

**A ▷ : Clip, 2**

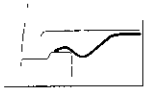

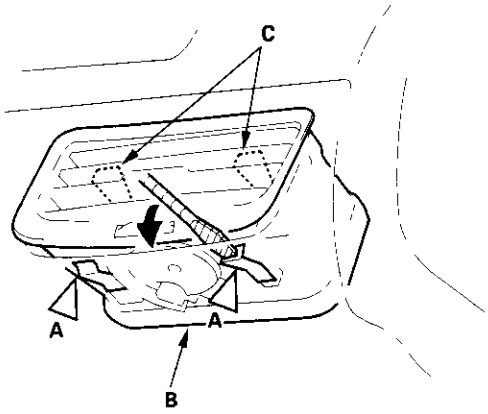


2. Remove the vent by releasing the hooks (C).

3. Reinstall the hook portions of the vent first, then push the clip portions into place securely.

## Dashboard Removal/Installation

SRS components are located in this area. Review the SRS component locations (see page 23-9) and the precautions and procedures (see page 23-10) in the SRS section before performing repairs or service.

NOTE:
- When prying with a flat-tip screwdriver, wrap it with protective tape, and apply protective tape around the related parts to prevent damage.
- Have an assistant help you when remove and install the dashboard.
- Take care not to scratch the dashboard, body and other related parts.
- Put on gloves to protect your hands.

1. Make sure you have the anti-theft code for the radio, then write down the frequencies for the radio's preset buttons.

2. Disconnect the negative cable from the battery, and wait at least 3 minutes before beginning work.

3. Remove these items:

   - Radio panel (see page 20-80)
   - Audio unit (see page 20-89)
   - Steering column (see page 17-9)
   - Passenger's dashboard lower cover (see page 20-81)
   - Front console cover, both sides (see page 20-81)
   - Passenger's airbag assembly (see page 23-65)
   - Kick panel, both sides (see page 20-69)
   - Front pillar trim, both sides (see page 20-68)

4. Disconnect the engine wire harness connector (A), engine compartment wire harness connectors (B), door wire harness connectors (C), rear wire harness connector (D), steering hanger beam wire harness connectors (E), SRS main harness connector (F), radio antenna harness connector (G), ECM connector (H), keyless entry control unit connector (I), and convertible top control unit connector (J).

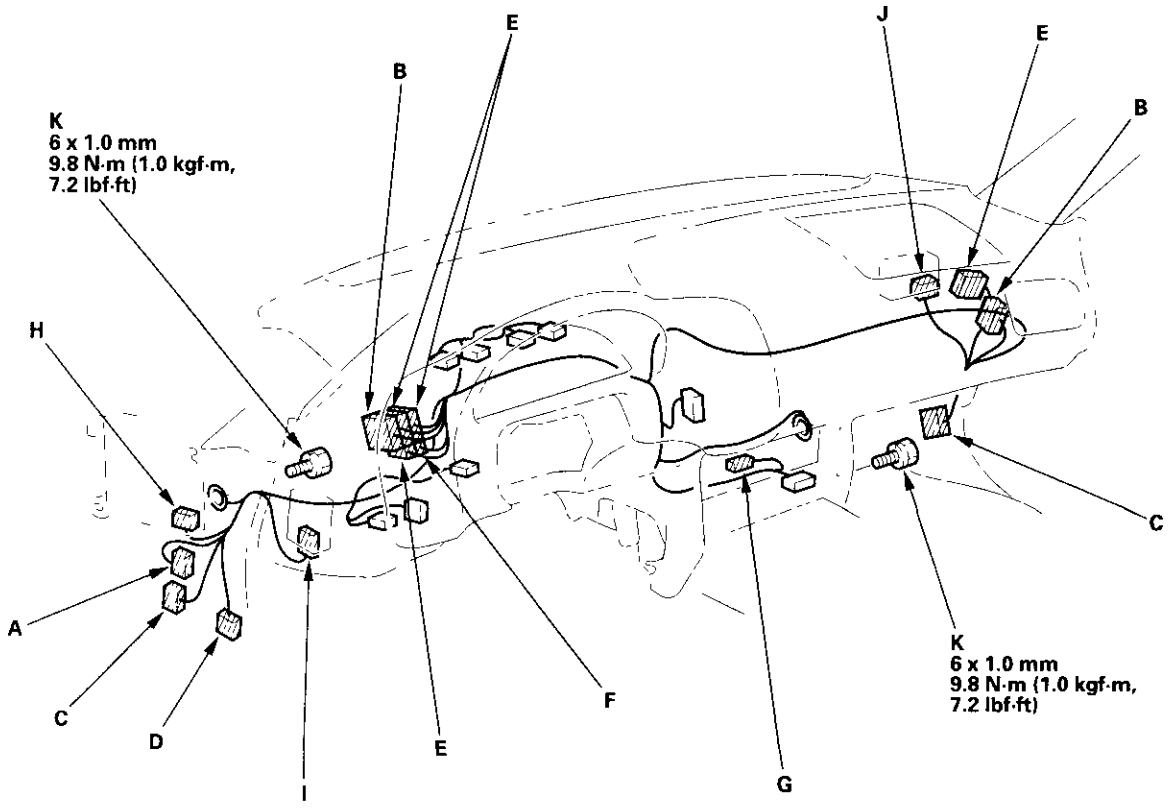


5. Remove the ground bolts (K).

6. Detach all of the harness and connector clips.

(cont'd)

## Dashboard Removal/Installation (cont'd)

7. From outside the doors, remove the caps (A), then remove the bolts (B, C, D) and screws (E), and lift up on the dashboard (F) to release it from the guide pins (G). Take care not to scratch the center console and shift knob.

**Fastener Locations**

A ▶ : Bolt, 2 B ▶ : Bolt, 2 C ▶ : Bolt, 2 D ▶ : Screw, 2

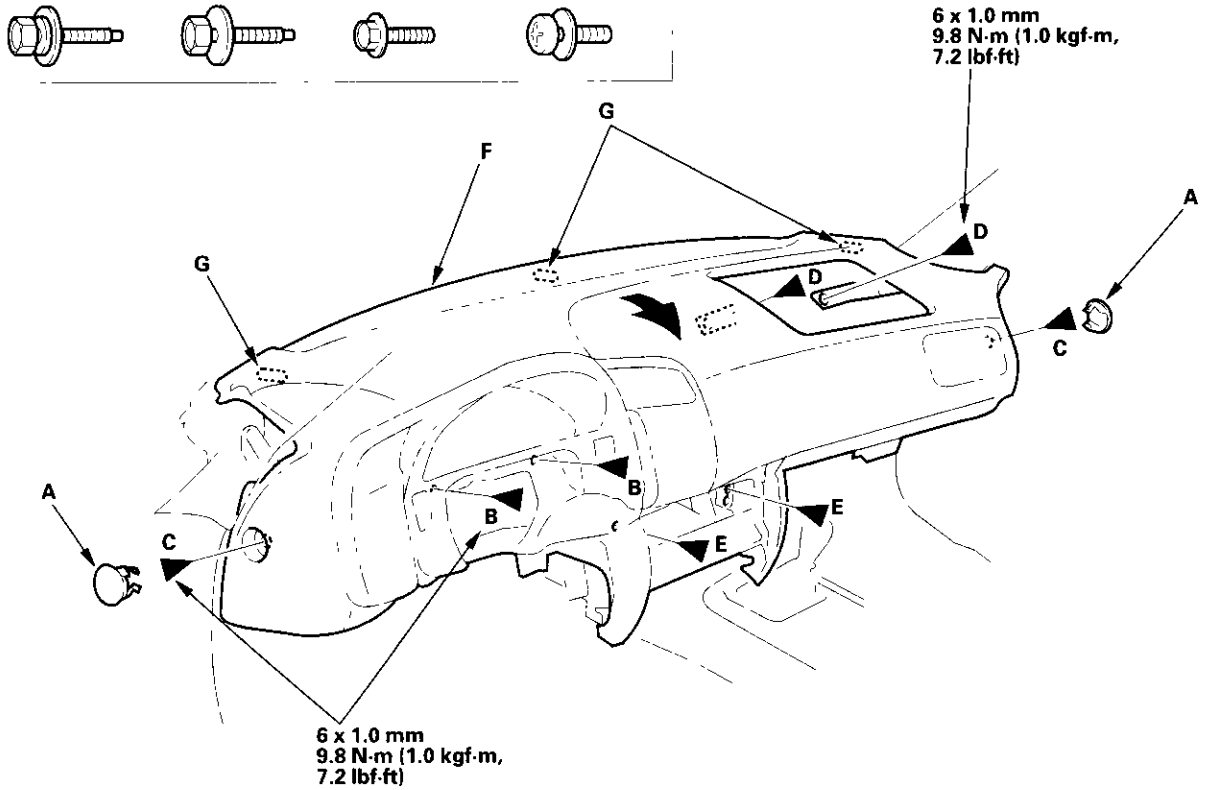


8. Carefully remove the dashboard through the front door opening.

9. Install the dashboard in the reverse order of removal, and note these items:

- Make sure the dashboard fits onto the guide pins correctly.
- Before tightening the bolts, make sure the dashboard wire harness and steering hanger beam wire harness are not pinched.
- Make sure the connectors are plugged in properly.
- Reconnect the negative cable to the battery.
- Enter the anti-theft code for the radio, then enter the customer's radio station presets.
- Reset the clock
- Do the PCM idle learn procedure (see page 11-100).

## Component Location Index

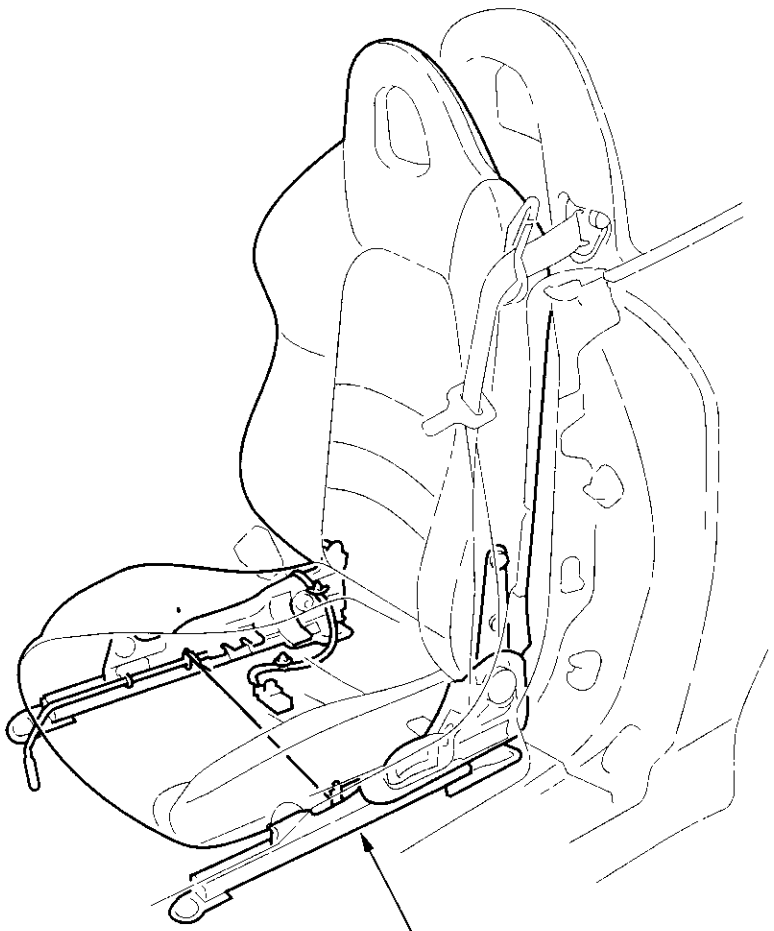

**SEAT**
Removal/Installation, page 20-86
Disassembly/Reassembly – Driver's, page 20-87
Disassembly/Reassembly – Passenger's, page 20-88
Seat Cover Replacement, page 20-89

## Seat Removal/Installation

NOTE: Take care not to scratch the body or tear the seat covers.

1. Remove the seat as shown.
2. Install the seat in the reverse order of removal, and note these items:
   - Slip the seat belt through the slits in the seat belt guide properly.
   - Make sure the seat belt switch connector is plugged in properly,
   - Apply liquid thread lock to the seat mounting belts before reinstallation.

**Fastener Locations**

**A ▶ : Bolt, 2** **B ▶ : Bolt, 2**

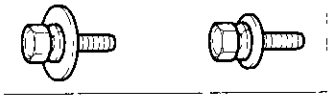

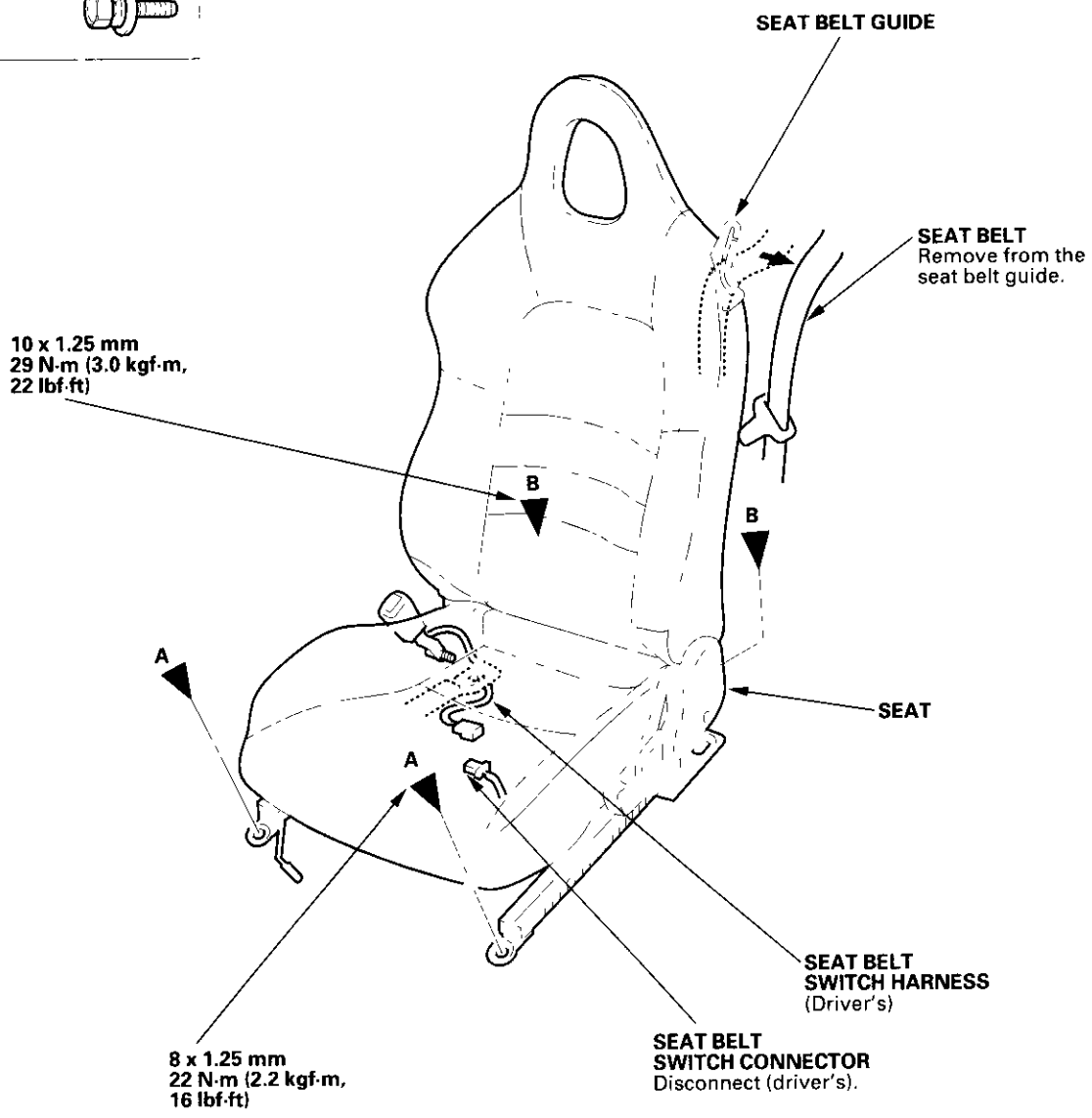

## Seat Disassembly/Reassembly - Driver's

NOTE:
- Make sure the bushing and pivot washer are installed correctly.
- Apply multipurpose grease to the moving portion of the seat track.
- To prevent wrinkles in the seat-back cover, stretch the material evenly over the pad.
- Reinstall the connecting wire through the holes in the hooks.

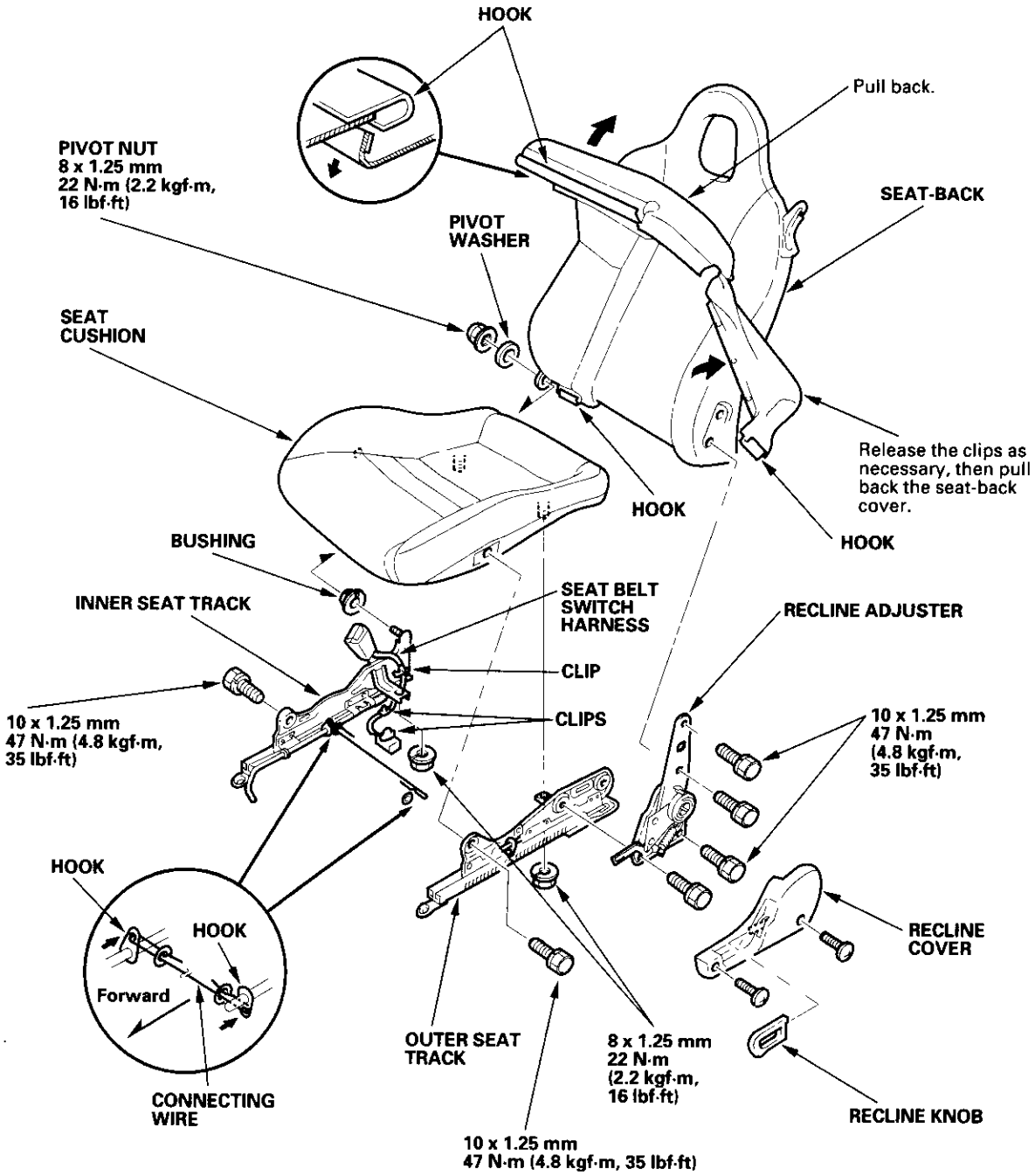

## Seat Disassembly/Reassembly - Passenger's

NOTE:
- Make sure the bushing and pivot washer are installed correctly.
- Apply multipurpose grease to the moving portion of the seat track.
- To prevent wrinkles in the seat-back cover, stretch the material evenly over the pad.
- Adjust the connecting cable as necessary.
- Make sure the connecting cable is connected properly.

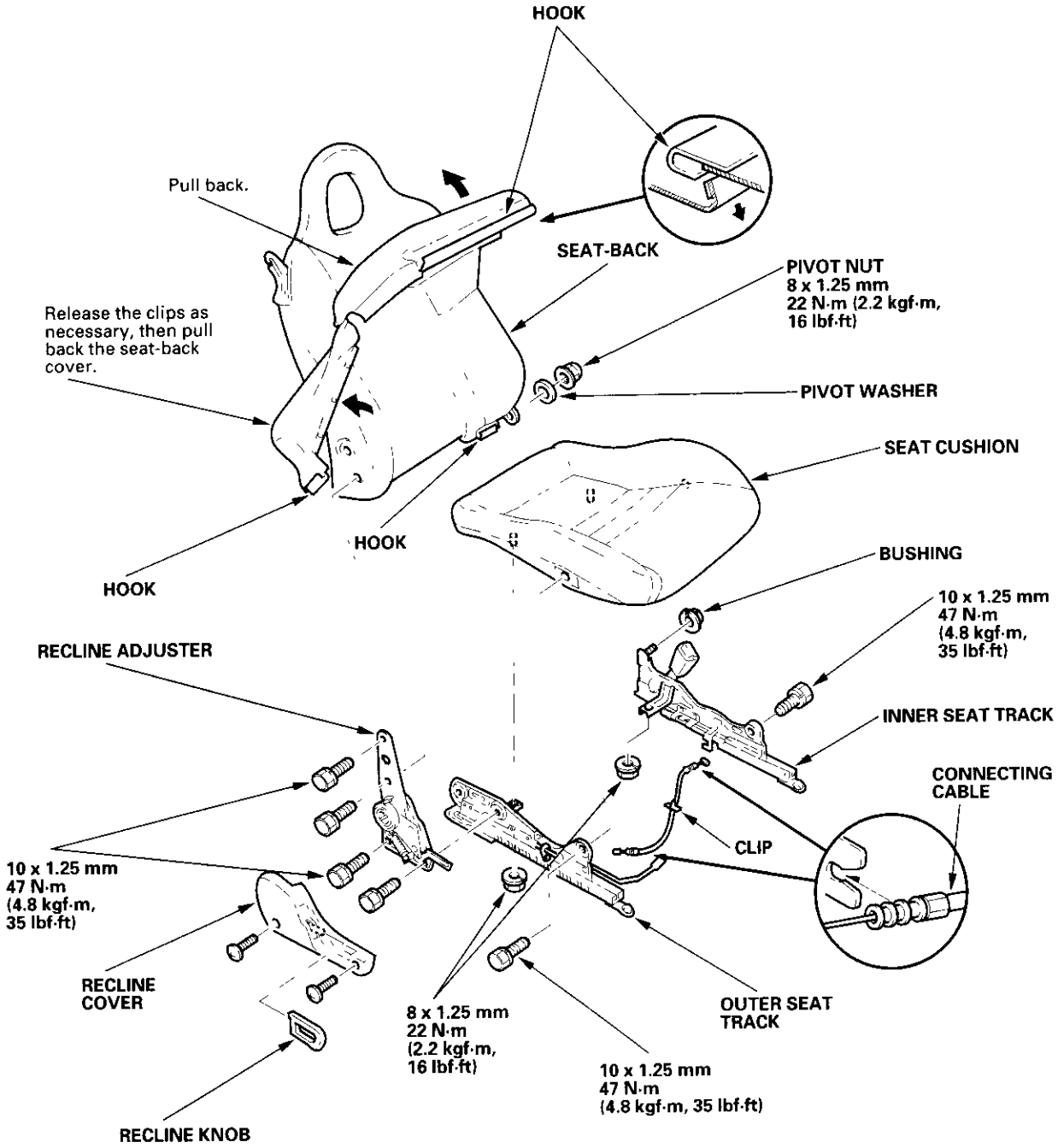

# Seat Cover Replacement

NOTE:
- Take care not to tear the seams or damage the seat covers.
- Put on gloves to protect your hands.

## Seat-back Cover

1. Remove the seat-back cover in numbered sequence.

2. Install the cover in the reverse order of removal, and note these items:

   - To prevent wrinkles when installing a seat-back cover, make sure the material is stretched evenly over the pad before securing the clips, fasteners and hooks.
   - Replace the released clips with new ones using commercially available upholstery pliers.
   - Replace any damaged headrest cover clips.

**Fastener Locations**

**A ▶ : Screw, 4  B ▶ : Screw, 2  C ▷ : Clip, 4**

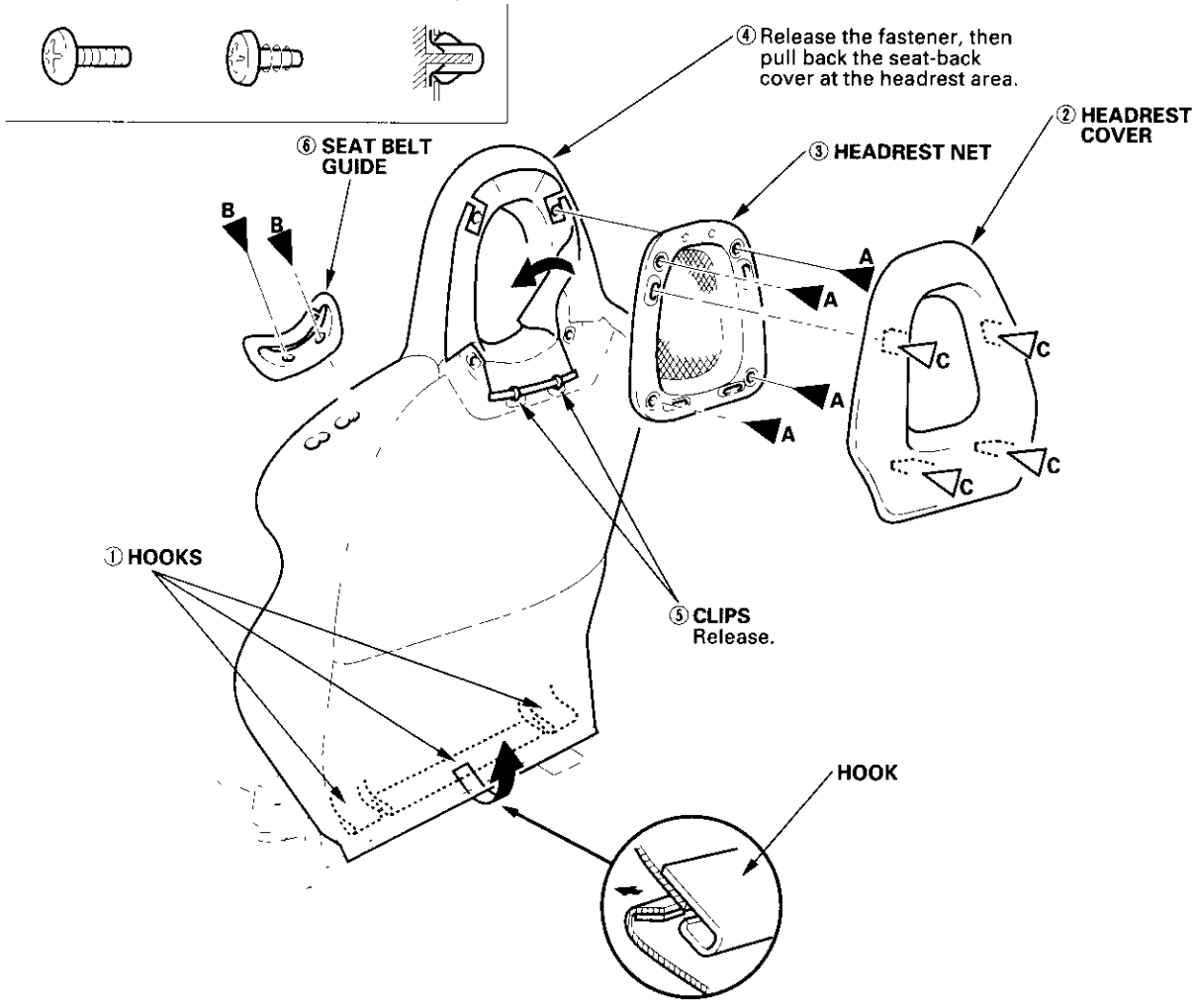


(cont'd)

## Seat Cover Replacement (cont'd)

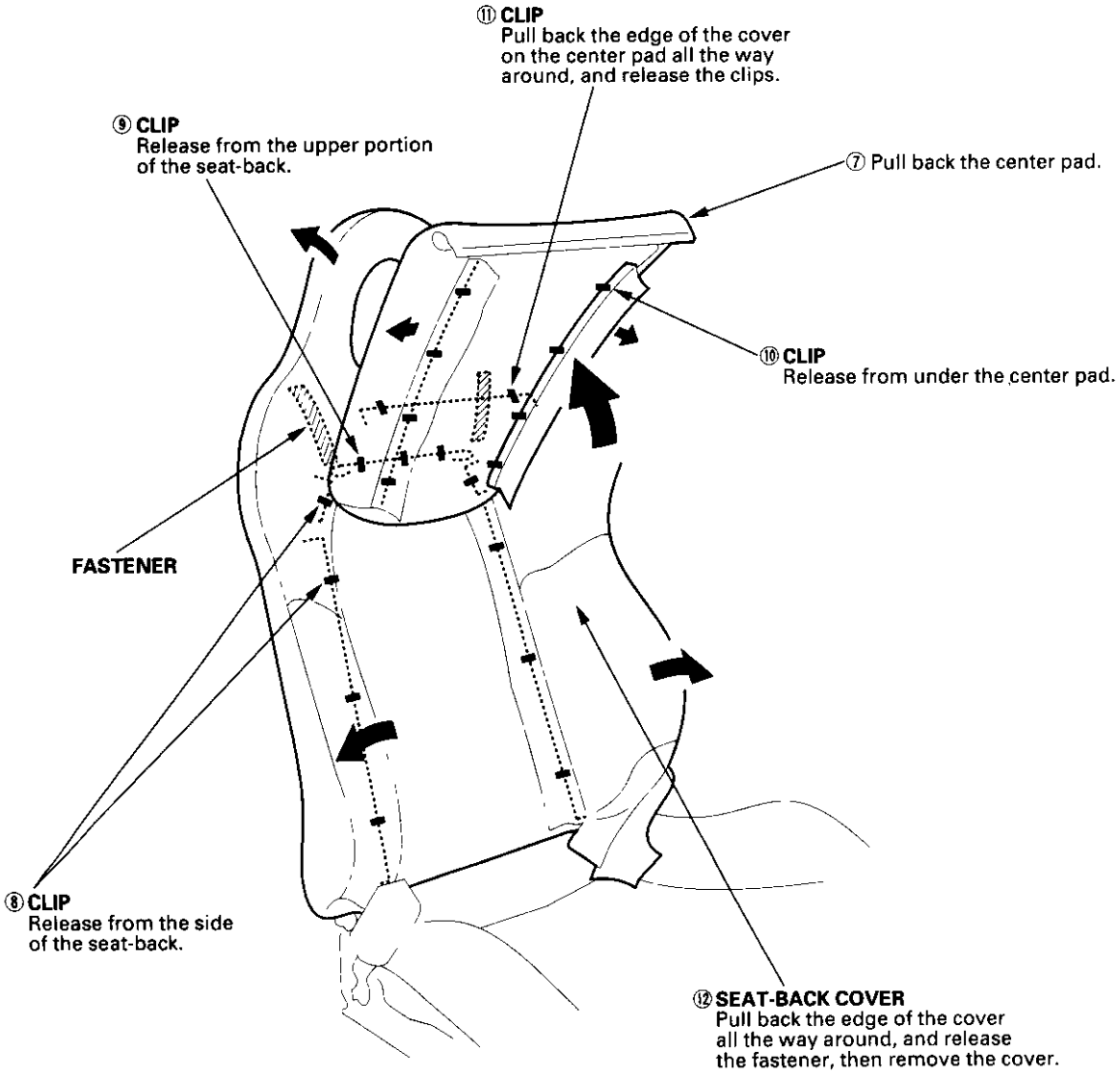

## Seat Cushion Cover

1. Remove the seat (see page 20-86).
2. Remove the seat cushion, driver's (see page 20-87), passenger's (see page 20-88).
3. Remove the seat cushion cover in numbered sequence.
4. Install the cover in the reverse order of removal, and note these items:
   - To prevent wrinkles when installing a seat cushion cover, make sure the material is stretched evenly over the pad before securing the clips.
   - Replace the released clips with new ones using commercially available upholstery ring pliers.

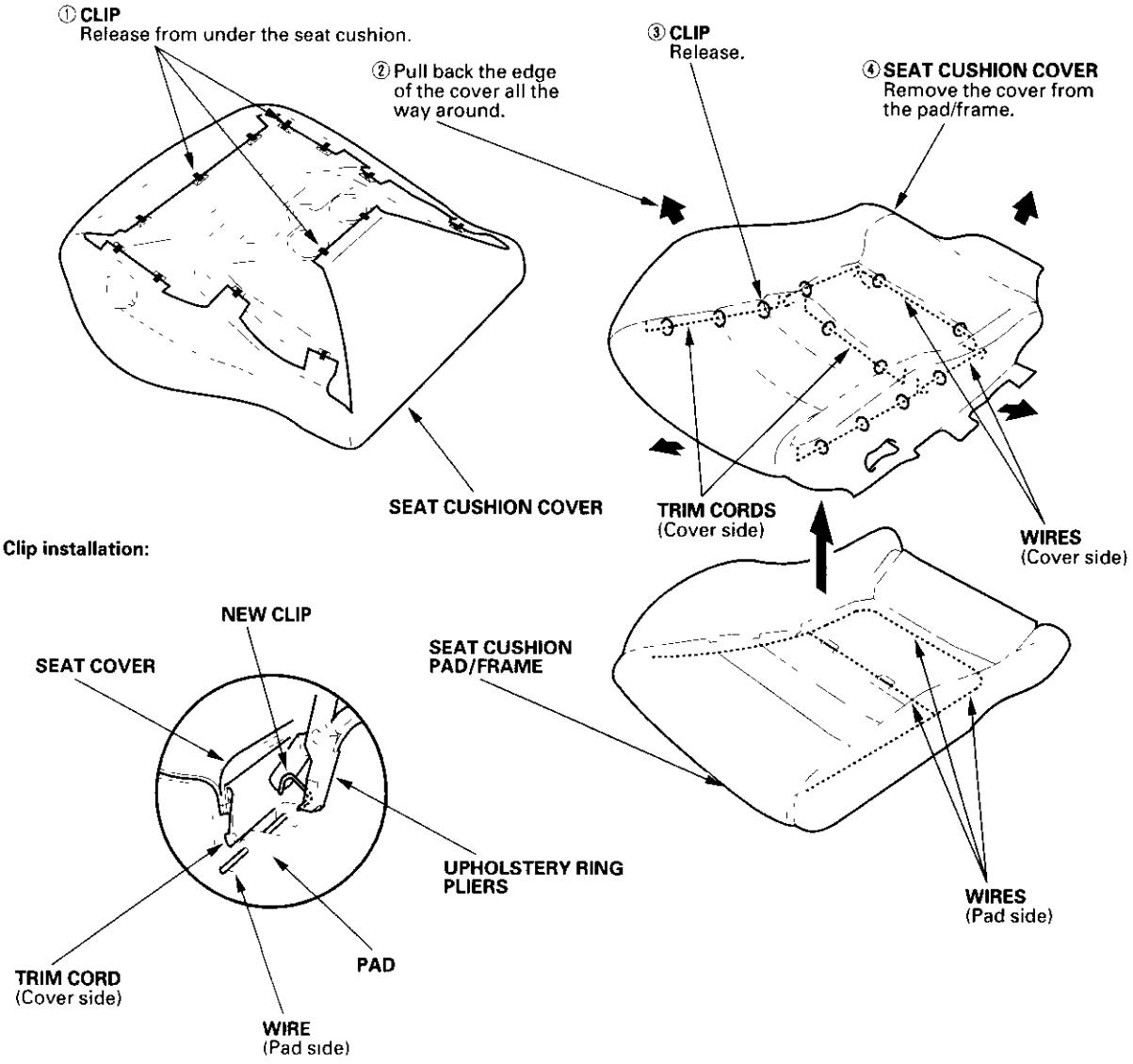

## Front Bumper Removal/Installation

NOTE:
- Have an assistant help you remove and install the front bumper.
- Take care not to scratch the front bumper and body.
- Put on gloves to protect your hands.

1. Remove the front bumper as shown.

2. Install the bumper in the reverse order of removal, and make sure the front bumper engages the hooks of the corner upper beams and front fenders securely.

**Fastener Locations**

**A ▶ : Bolt, 5  B ▶ : Bolt, 9  C ▶ : Bolt, 2  C ▶ : Screw, 2**

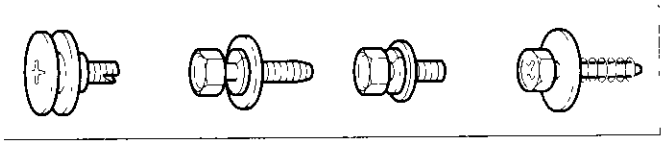

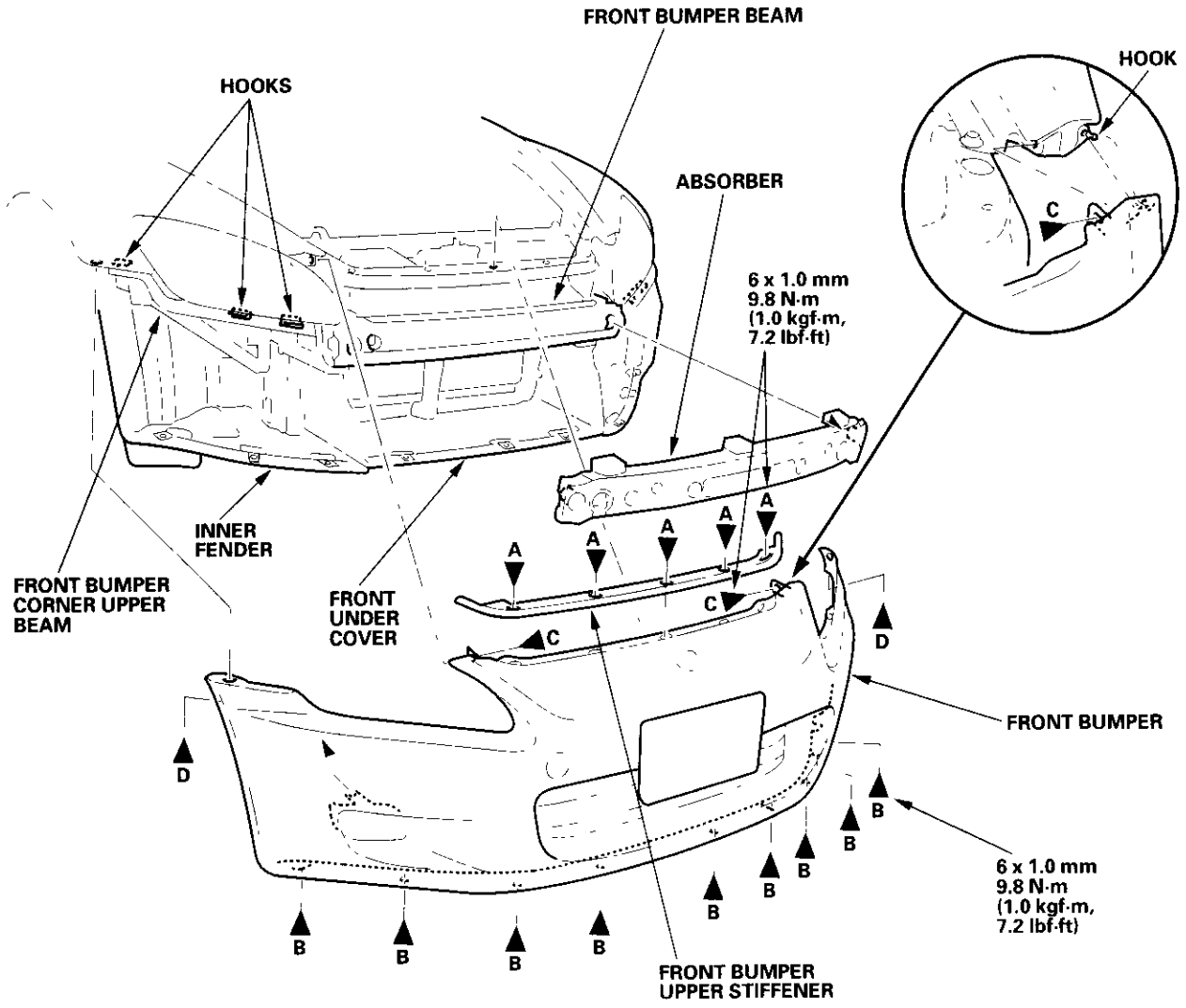

# Rear Bumper Removal/Installation

NOTE:
- Have an assistant help you remove and install the rear bumper.
- Take care not to scratch the rear bumper and body.
- Put on gloves to protect your hands.

1. Remove the rear bumper as shown.

2. Install the bumper in the reverse order of removal, and note these items:

   - Make sure the rear bumper engages the hooks (bumper spacers and under the taillight) on each side securely.
   - Make sure the license plate light connector is plugged in properly.
   - Replace any damaged clips.

**Fastener Locations**

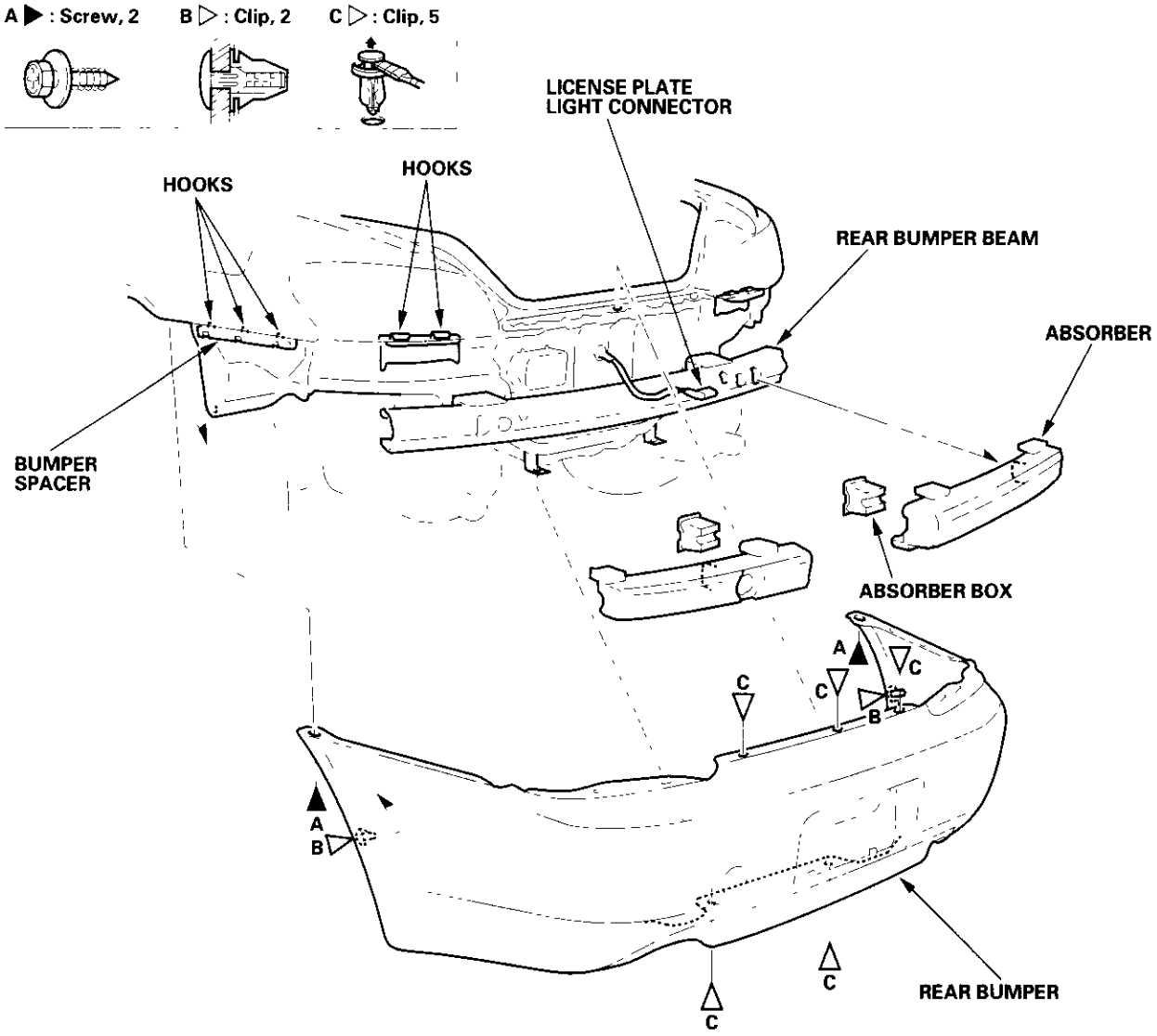

## Adjustment

1. Slightly loosen each hood hinge bolt.
2. Adjust the hood alignment:
   - Adjust the hood right and left, as well as forward and rearward, by using the elongated holes on the hood hinge (A).
   - Turn the hood edge cushions (B), as necessary, to make the hood fit flush with the body at front and side edges.

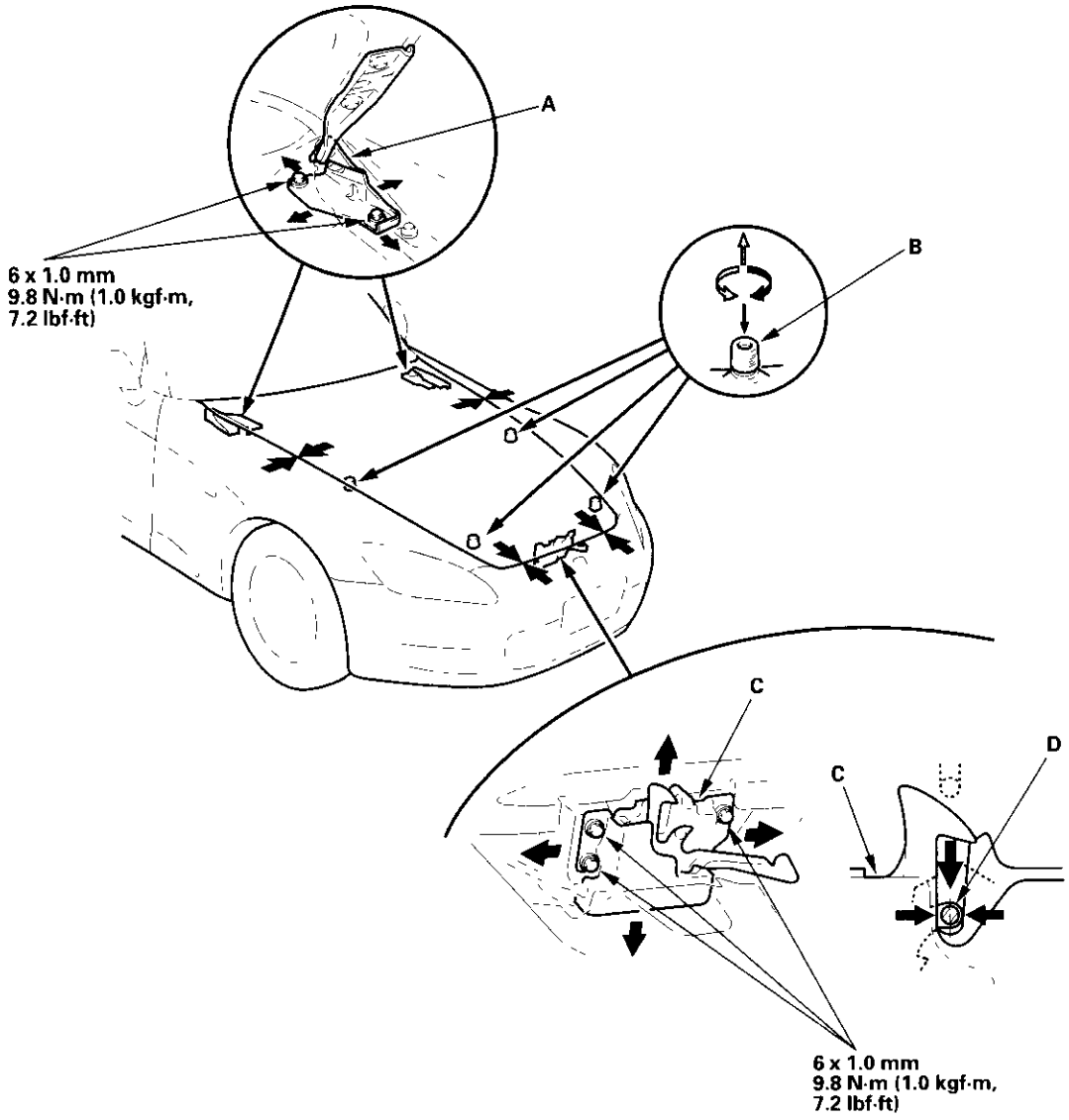


3. Adjust the hood latch (C) to obtain the proper height at the forward edge, and move the hood latch right on left until the striker (D) is centered in the hood latch.
4. Tighten each bolt securely.

5. Check that the hood opens properly and locks securely.

6. Apply body paint to the hinge mounting bolts and around the hinges.

7. Remove the air guide plate cover (see page 20-111), then remove the latch cover (A). Apply multipurpose grease to each location of the hood latch (B) and hood hinge (C) as indicated by the arrows.

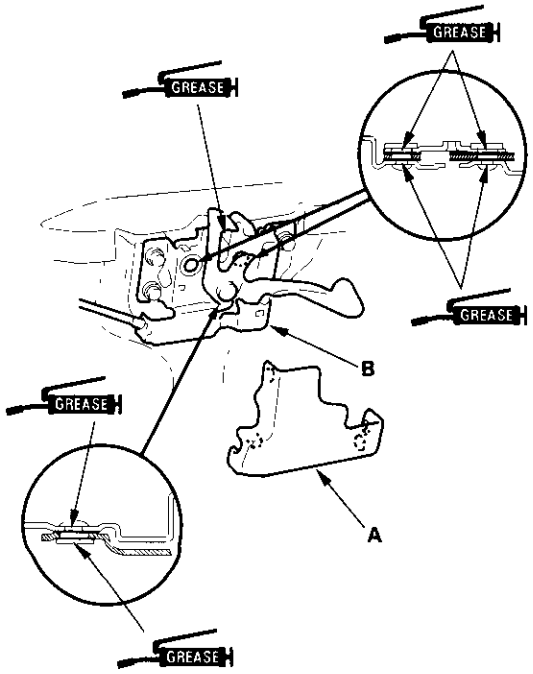


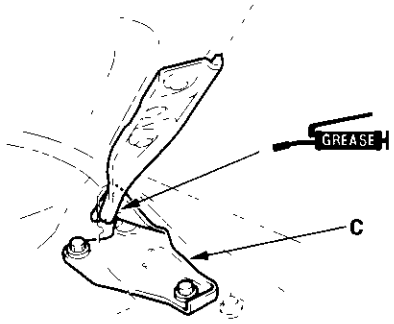

## Hood Insulator Replacement

NOTE:
- Take care not to scratch the hood.
- Use a clip remover to remove the clips.

1. Remove the hood insulator in numbered sequence.

2. Install the insulator in the reverse order of removal, and note these items:

   - Replace any damaged clips.
   - Push the clips into place securely.
   - Make sure the windshield washer tubes are connected properly.

**Fastener Locations**

**A ▷ : Clip, 10** **B ▷ : Clip, 2**

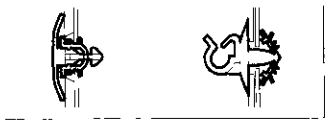

## Adjustment

1. Slightly loosen each bolt.
2. Adjust the trunk lid alignment:
   - Adjust the trunk lid right and left, as well as forward and rearward, by using the elongated holes on the trunk lid hinges(A).
   - Turn the trunk lid edge cushions (B) in or out as necessary, to make the trunk lid fit flush with the body at the rear and side edges.
   - Adjust the fit between the trunk lid and the trunk lid opening by moving the striker (C).

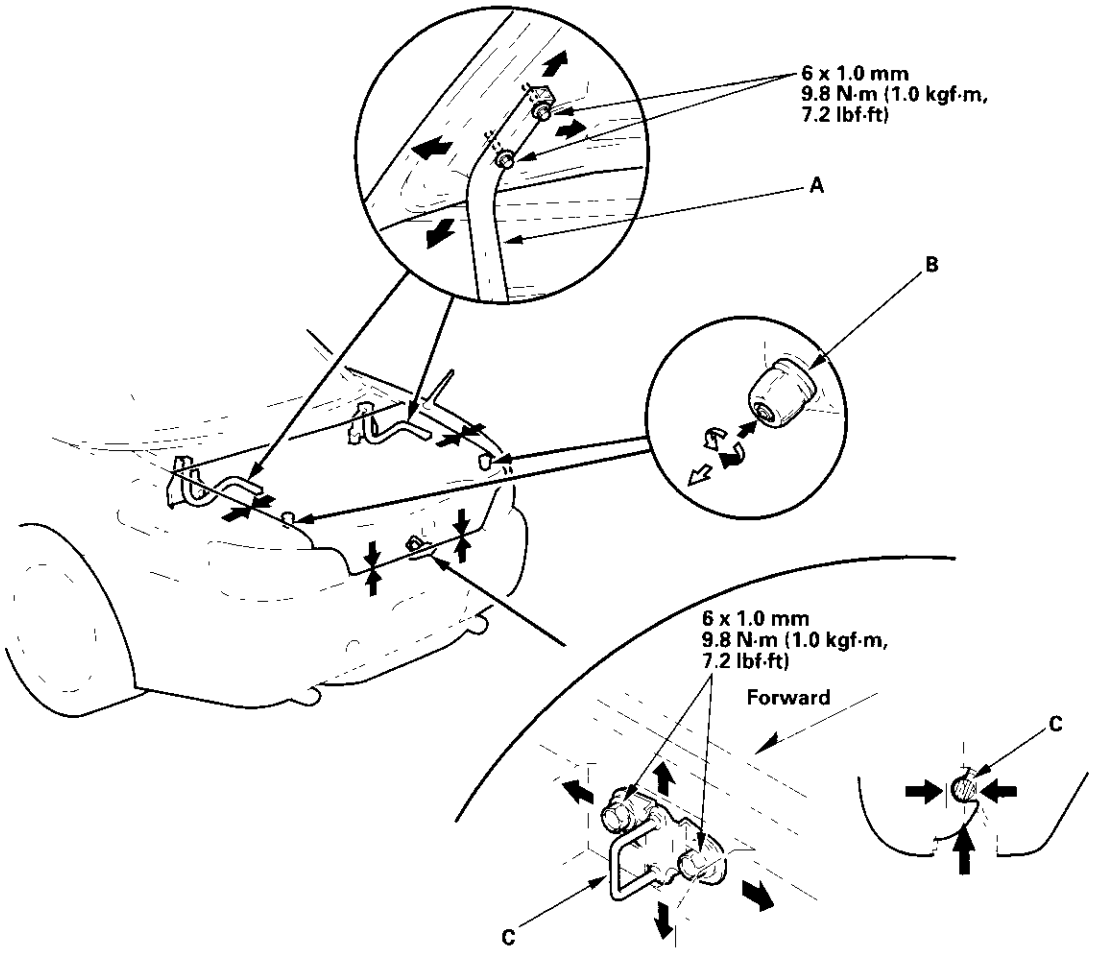


3. Tighten each bolt securely.
4. Make sure the trunk lid opens properly and locks securely.
5. Apply body paint to the trunk lid mounting bolts and around the hinges.

## Trunk Lid Torsion Bar Replacement

NOTE:
- Take care not to scratch the body.
- Put on gloves to protect your hands.
- Use a torsion bar tool to remove and install the torsion bars.
- First remove right torsion bar, and remove the left torsion bar.

1. Remove the trunk lid torsion bar as shown.

2. Install the torsion bar in the reverse order of removal, and note these items:

   - The right torsion bar has a piece of rubber on it as shown. Install the right and left torsion bars in their proper locations.
   - Make sure the trunk lid opens properly and locks securely.

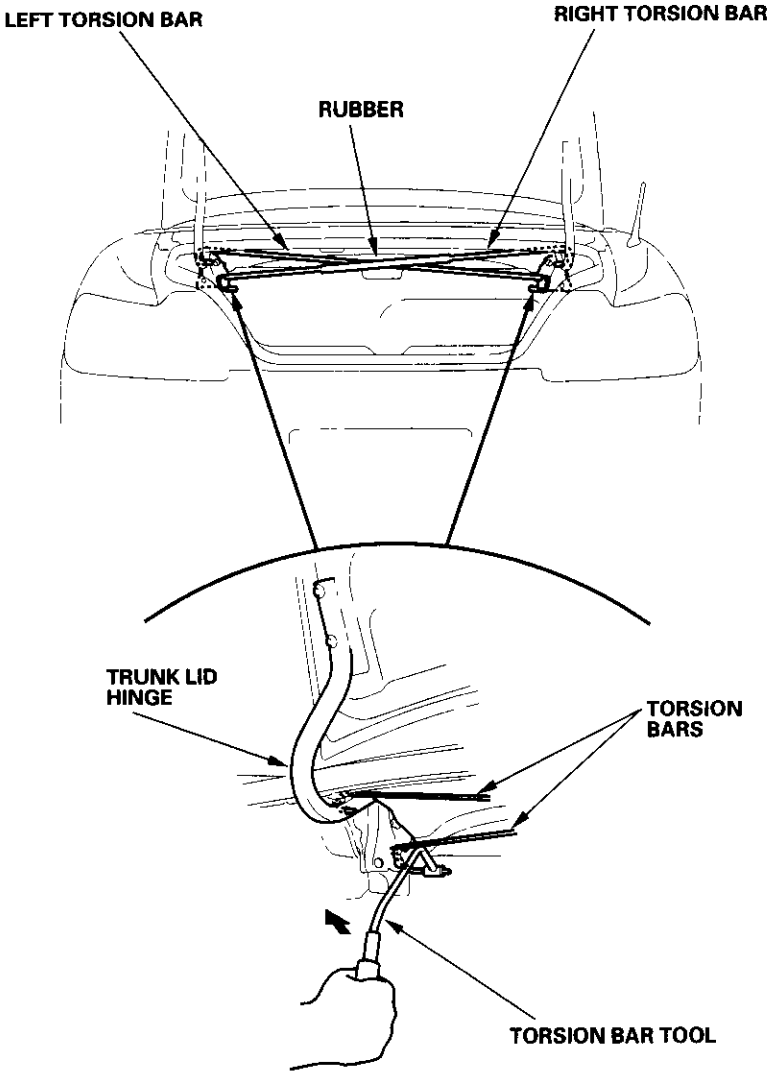

## Trunk Lid Rubber Protector Replacement

NOTE:
- Take care not to scratch the trunk lid.
- Use a clip remover to remove the clips.

1. Remove the trunk lid rubber protector as shown.
2. Install the protector in the reverse order of removal, and note these items:
   - Replace any damaged clips.
   - Push the clip portions into place securely.

**Fastener Locations**

**A ▷ : Clip, 8**

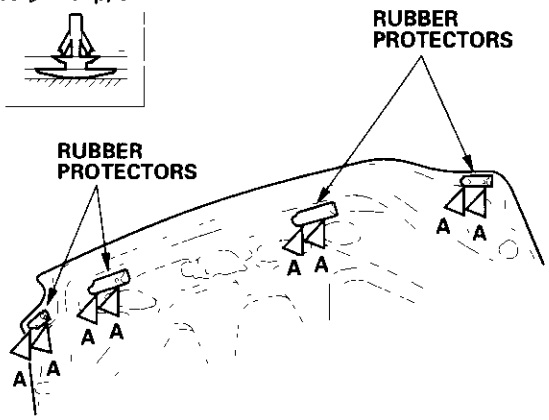


## Trunk Lid Weatherstrip Replacement

1. Remove the trunk lid weatherstrip by pulling it off.
2. Locate the painted alignment mark (A) on the trunk lid weatherstrip (B). Align the painted mark with the alignment tab in the center of the trunk, and install the weatherstrip all the way around facing in the direction shown. Make sure there are no wrinkles in the weatherstrip.

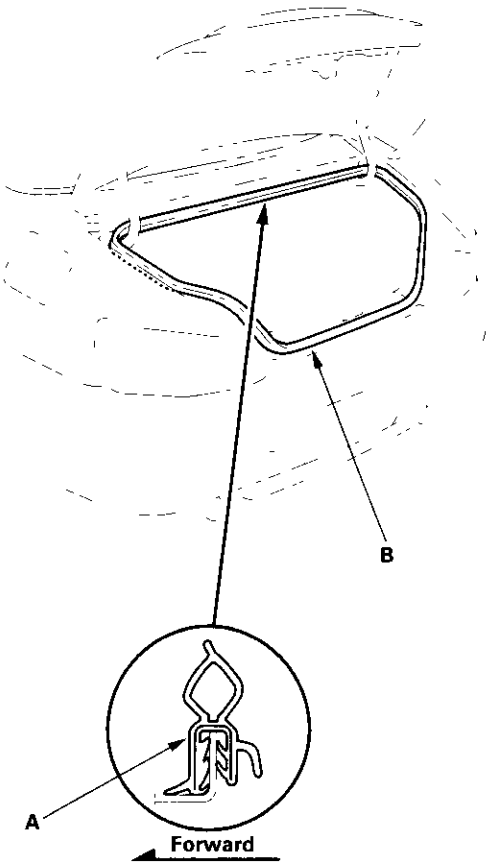


3. Check for water leaks.

## Adjustment

1. Slightly loosen the hinge mounting bolts (A).

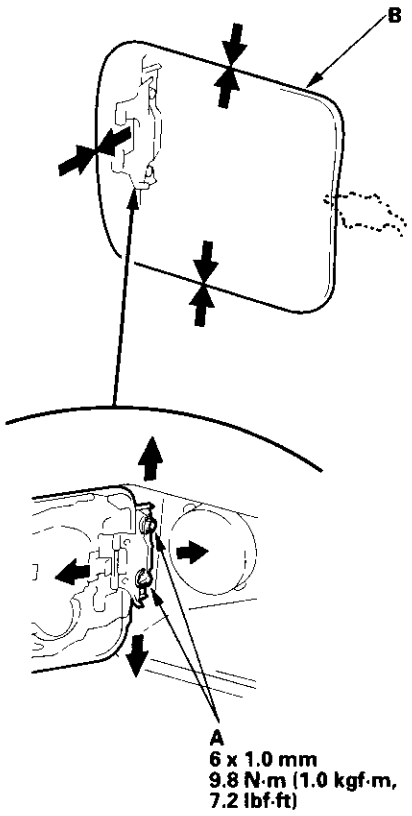


2. Adjust the fuel fill door (B) in or out until it's flush with the body, and up or down as necessary to equalize the gaps.
3. Tighten the hinge mounting bolts.
4. Check that the fuel fill door opens properly and locks securely.
5. Apply multipurpose grease to each location indicated by the arrows.

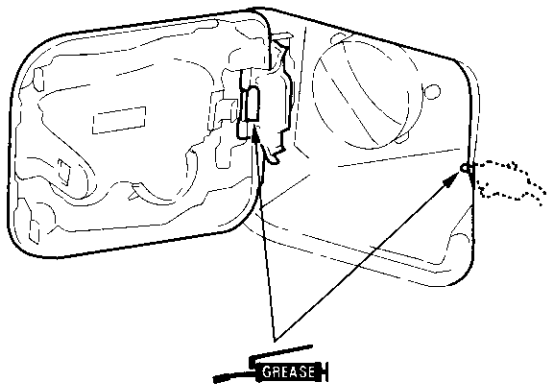


6. Apply body paint to the hinge mounting bolts and around the hinges.

## Cowl Cover Replacement

NOTE:
- Take care not to scratch the body.
- Use a clip remover to remove the clips.

1. Remove the windshield wiper arms (see page 22-112).
2. Remove the cowl cover as shown.
3. Install the cover in the reverse order of removal, and note these items:
   - Replace any damaged clips.
   - Push the clip portions into place securely.

**Fastener Locations**

**A ▷ : Clip, 7** **B ▷ : Clip, 9**

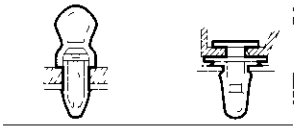

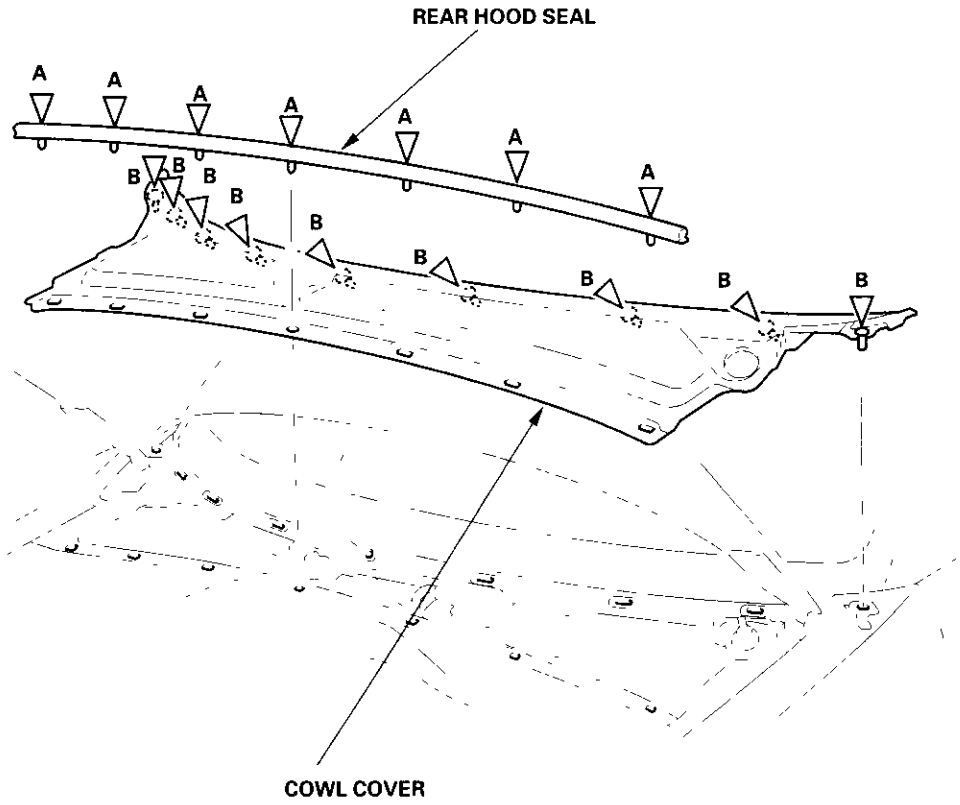

## Rear Tray Opening Molding Replacement

NOTE:
- Take care not to scratch the body.
- Be careful not to pry too far or you may bend the molding.
- Put on gloves to protect your hands.

1. Remove these items: then remove the rear tray opening molding as shown:
   - Convertible top assembly (see page 20-38)
   - B-pillar outer weatherstrips, both sides (see page 20-52)
   - Drain tank, both sides (see page 20-52)
2. Remove the rear tray opening molding as shown.

**Fastener Locations**

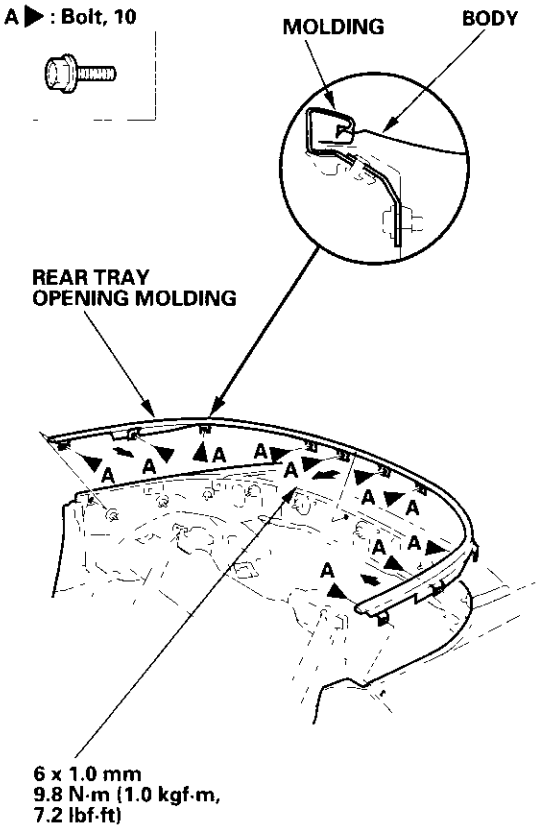


3. Install the molding in the reverse order of removal.

## Rear Window Lower Molding Replacement

NOTE: Take care not to scratch the body.

1. Remove the rear window lower molding as shown.
2. Install the molding in the reverse order of removal, and replace the clip if it's damaged.

**Fastener Locations**

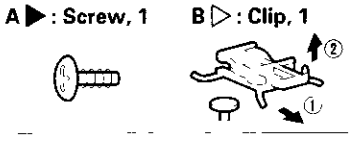


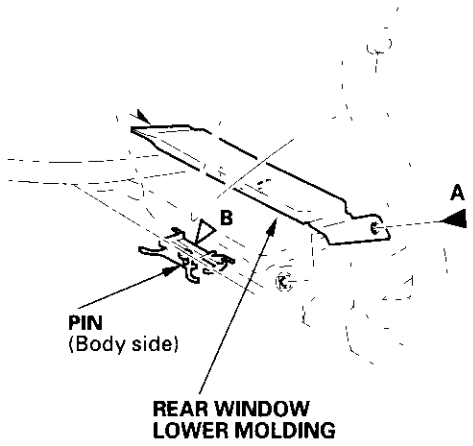

## Emblem Replacement

NOTE: When removing the emblems, take care not to scratch the body.

Apply the emblems where shown, and note these items:

- Clean the body surface with a sponge dampened in alcohol.
- After cleaning, keep oil, grease and water from getting on the surface.

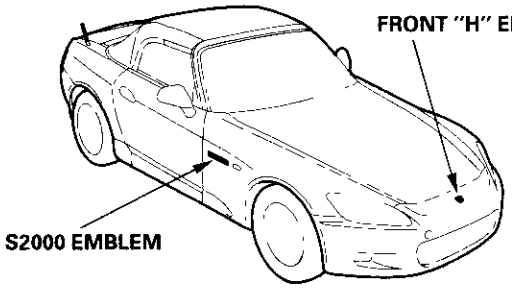


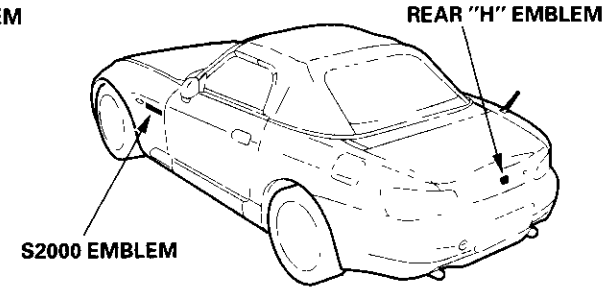


**Adhesive tape: 3M 4213E, or equivalent**
**Thickness 0.8 mm (0.03 in.)**
**Unit: mm (in.)**

**'00-01 models:**

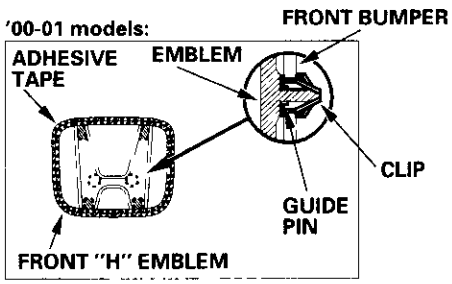


**'00-01 models:**

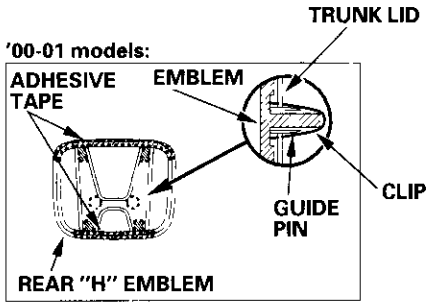


**'02-03 models:**

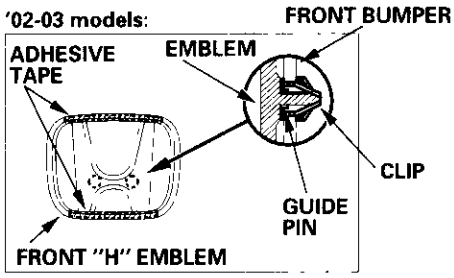


**'02-03 models:**

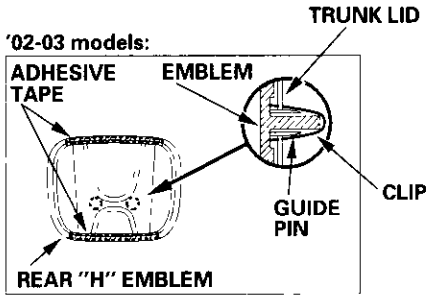


**Left side:**

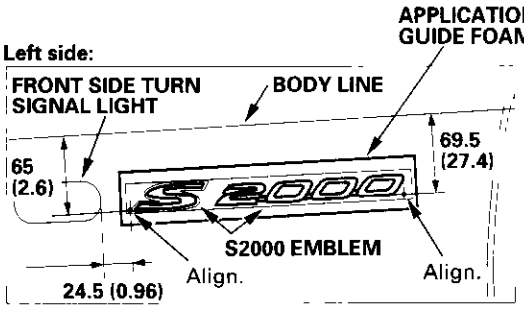


**Right side:**

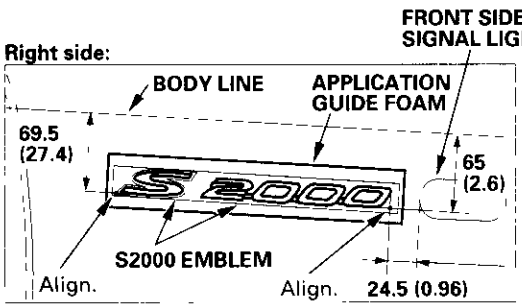

## A-pillar Exterior Trim Replacement

NOTE:
- Keep dust away from the working area.
- When working at lower temperatures, heat the body and trim with a hair dryer.
  Body: about 59°F (15°C)
  Trim: about 86°F (30°C)
- When heating the trim, heat it evenly and gradually to prevent deformation.
- Clean the body bonding surface with a sponge dampened in alcohol.
- After cleaning, keep oil, grease and water from getting on the surface.

1. Remove these items, then peel up the old trim while heating it with a hair dryer.

   - A-pillar-header weatherstrip (see page 20-51)
   - A-pillar molding, both sides (see page 20-51)

2. Apply the trim in the numbered sequence, and note these items:

   - Align the application tape with the A-pillar as shown.
   - When pressing the trim, slowly press it from the corner to prevent air bubbles and wrinkles.
   - If there are air bubbles in the trim, peel up the trim, then reapply it.
   - After reinstalling all removed parts, check that the body color is covered by the trim.

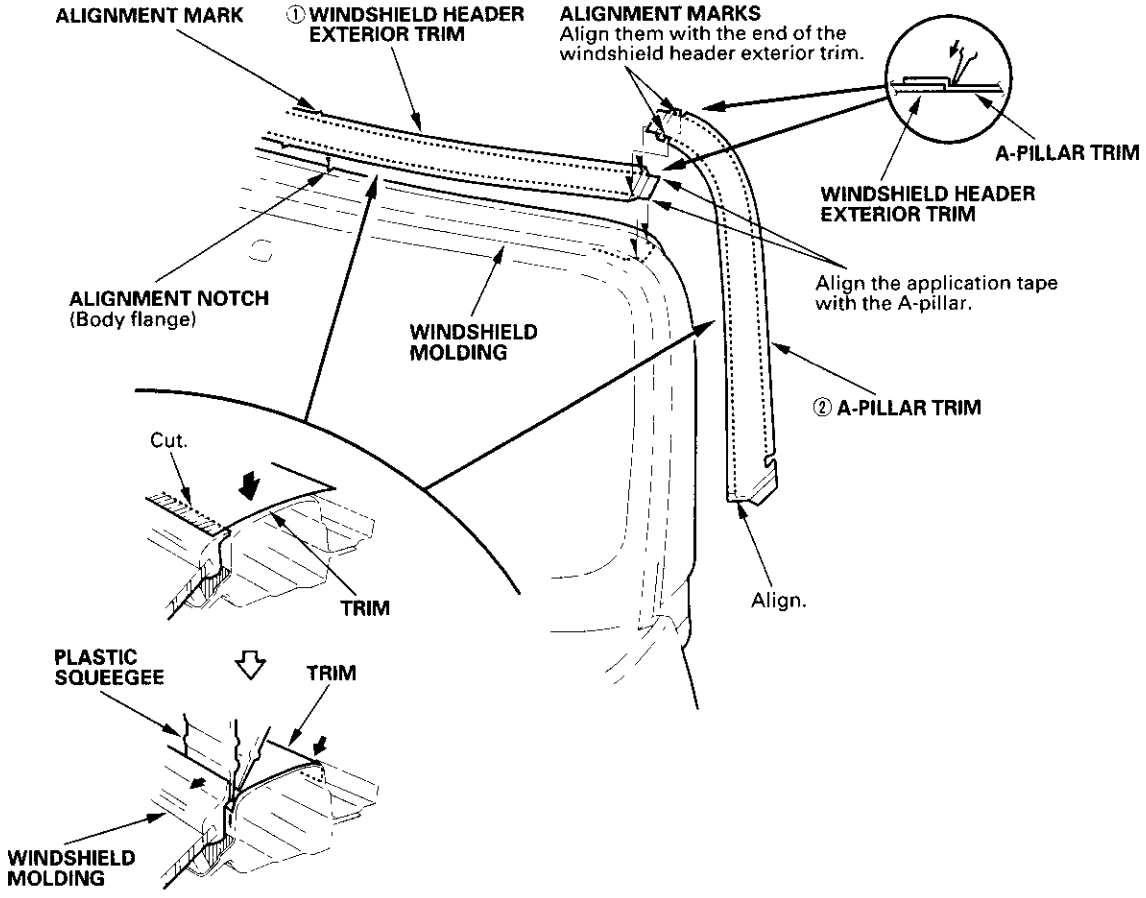

## Inner Fender Replacement

NOTE: Take care not to scratch the body.

1. Remove the front wheel.
2. Remove the inner fender as shown.
3. Install the inner fender in the reverse order of removal, and replace any damaged clips.

**Fastener Locations**

**A ▶ : Bolt, 5  B ▶ : Screw, 2  C ▷ : Clip, 17**

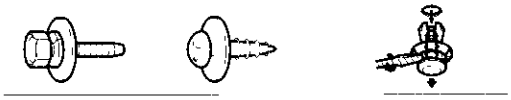

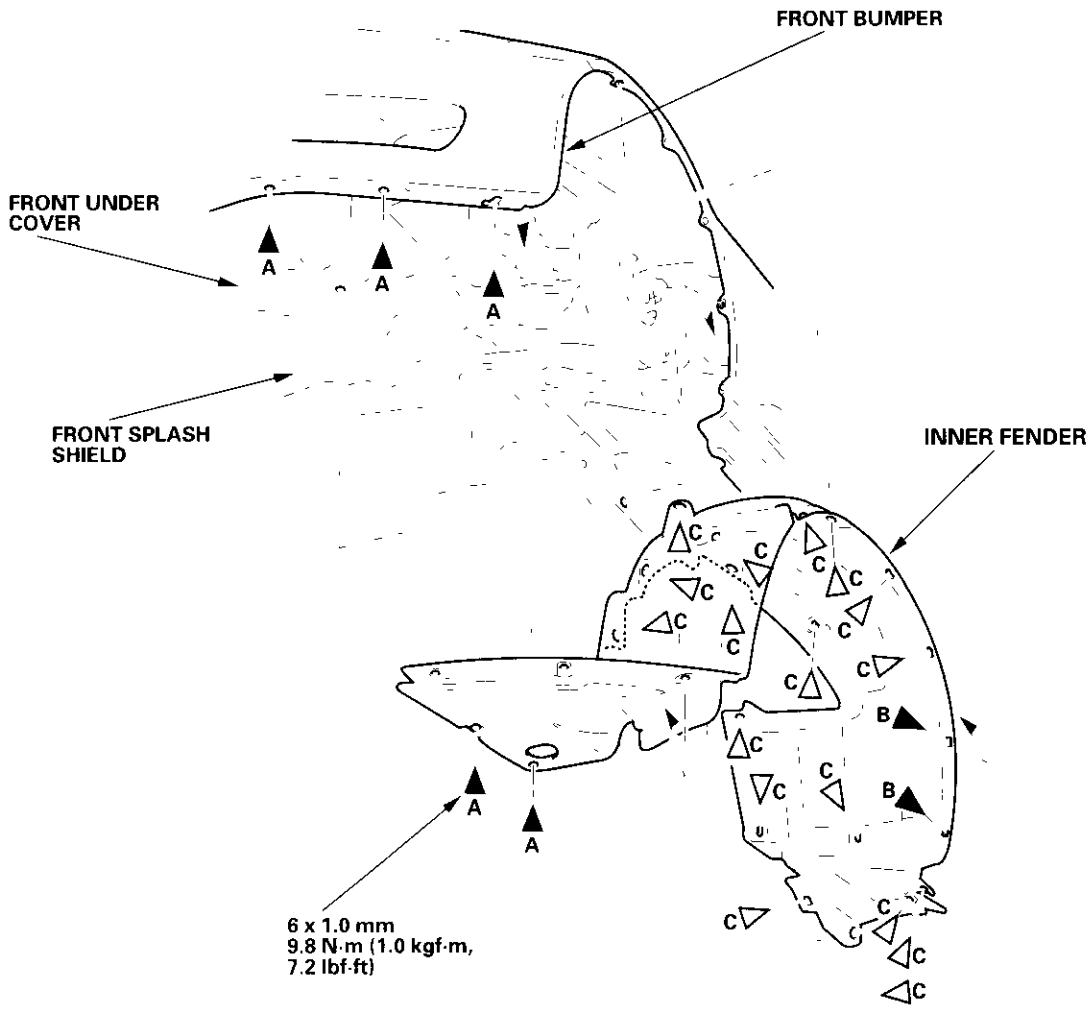

## Strakes Replacement

NOTE: Take care not to scratch the body.

1. Remove the strakes as shown.
2. Install the strakes in the reverse order of removal.

**Fastener Locations**

**A ▶ : Bolt, 2  B ▶ : Bolt, 4  C ▶ : Screw, 3**

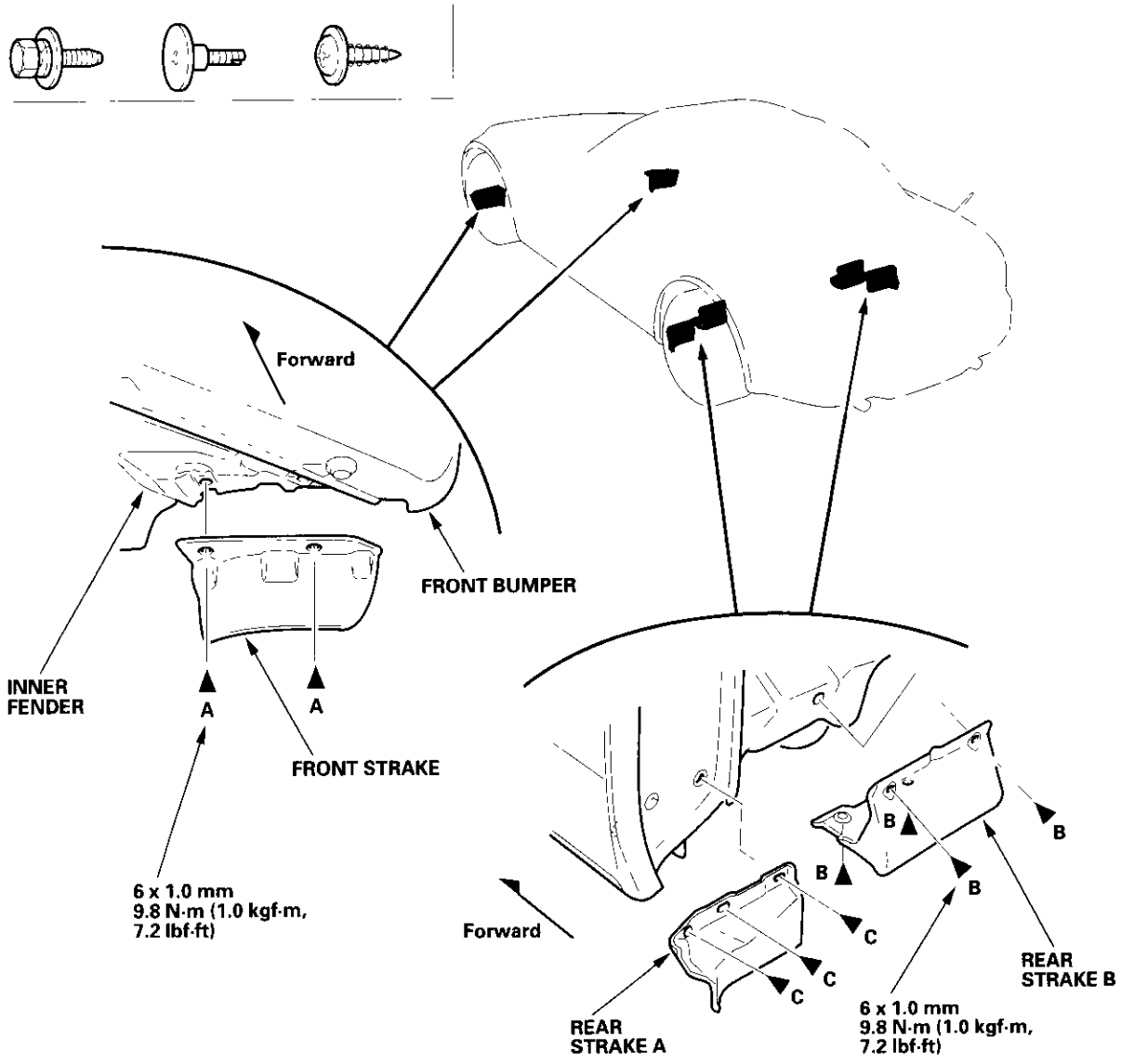

## Fenderwell Trim Replacement

NOTE: The steel core in the fenderwell trim cannot be restored to it original shape once it is bent. Replace the fenderwell trim when the steel core is bent.

1. Remove the fenderwell trim by pulling it out.
2. Install the fenderwell trim, and note these items:
   - Clean the body bonding surface with a sponge dampened in alcohol.
   - After cleaning, keep oil, grease and water from getting on the clean surface.
   - Apply clear sealant in the groove of the trim at the area indicated by the arrow.
   - Scrape or wipe the excess sealant off with a soft shop towel dampened in alcohol.

**Sealant: Cemedine P/N 08712-0004, or equivalent**

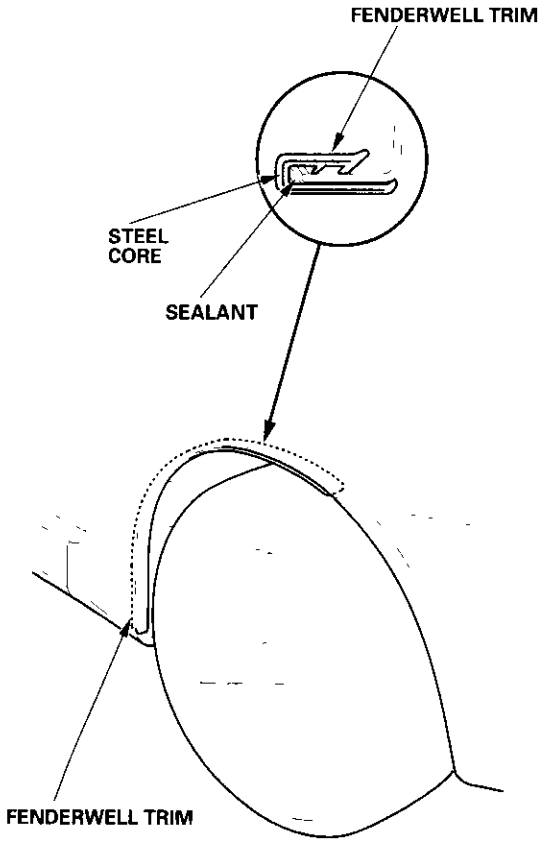


## Rear Air Outlet Replacement

NOTE: Take care not to scratch the body.

1. Remove these items:
   - Rear trim panel (see page 20-73)
   - Rear bumper (see page 20-93)
2. Remove the rear air outlet as shown.
3. Install the air outlet in the reverse order of removal, and note these items:
   - Replace any damaged clips.
   - Push the clip portions into place securely.

**Fastener Locations**

**A ▷: Clip, 2**

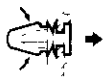

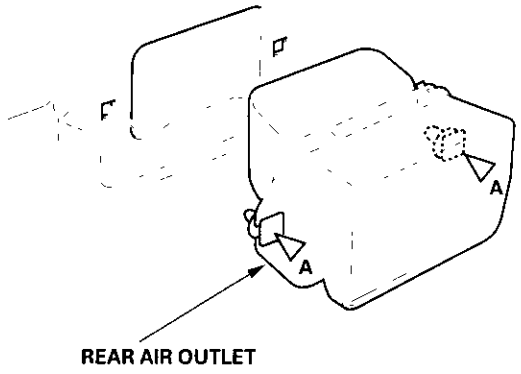

## Component Location Index

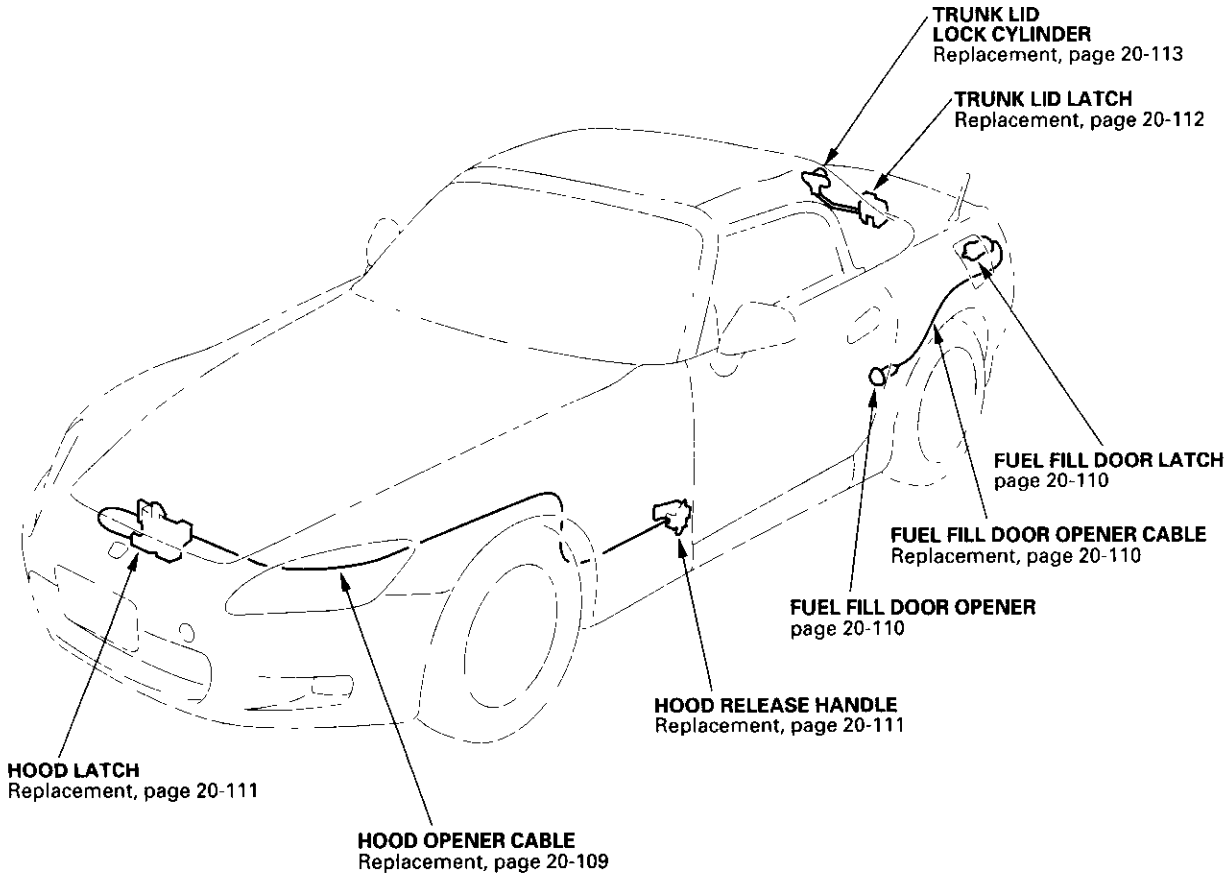

# Hood Opener Cable Replacement

NOTE:
- Put on gloves to protect your hands.
- Take care not to scratch the body and related parts.
- Take care not to bend the cable.

1. Remove these items:

   - Inner fender (see page 20-105)
   - Kick panel (see page 20-69)
   - Front bumper (see page 20-92)
   - Air guide plate

2. Disconnect the hood opener cable (A) from the hood latch (B) and hood release handle (C) (see page 20-111).

**Fastener Locations**

**D ▷ : Clip, 1** **E ▷ : Clip, 6**

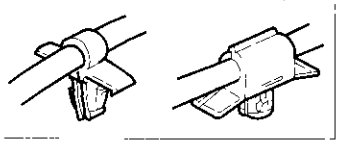

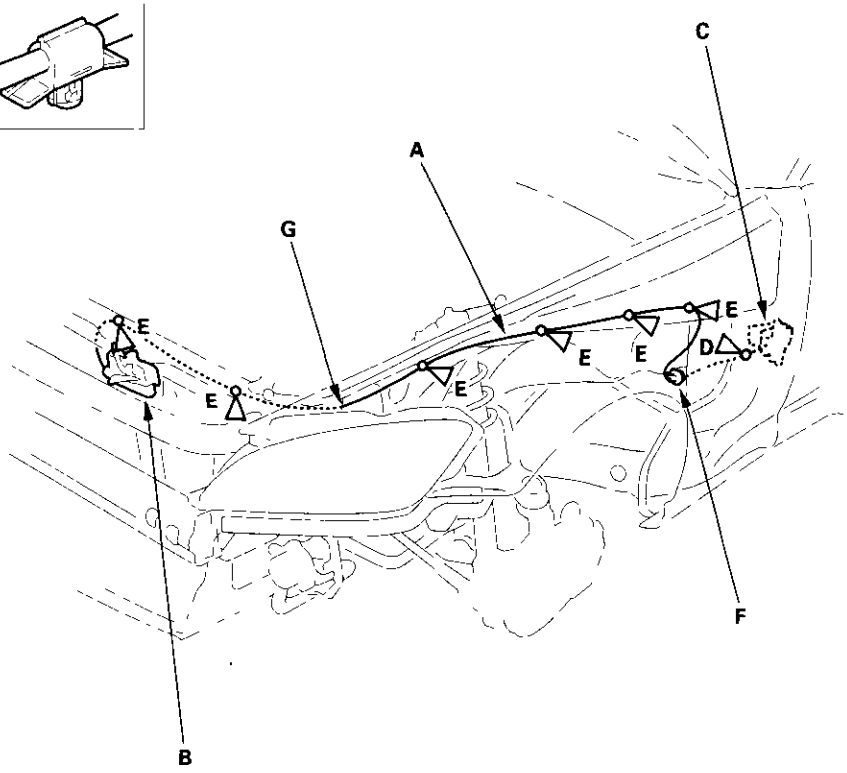


3. Using a clip remover, detach the clips (D, E) and remove the grommet (F) from the body, then remove the hood opener cable. Take care not to bend the cable.

4. Install the cable in the reverse order of removal, and note these items:

   - Replace any damaged clips.
   - Route the cable through the hole (G) in the body.

## Fuel Fill Door Opener Cable Replacement

NOTE:
- Put on gloves to protect your hands.
- Take care not to scratch the body and related parts.
- Take care not to bend the cable.

1. Remove these items:
   - Rear side trim (see page 20-70)
   - Rear tray (see page 20-71)
   - Trunk side trim panel, left side (see page 20-73)

2. Remove the fuel fill door opener knob (A) from the fuel fill door opener bracket (B) by turning it 90°, and remove the fuel fill door latch (C) from the body in the same way.

**Fastener Location**

**E ▷ : Cable cushion, 1**

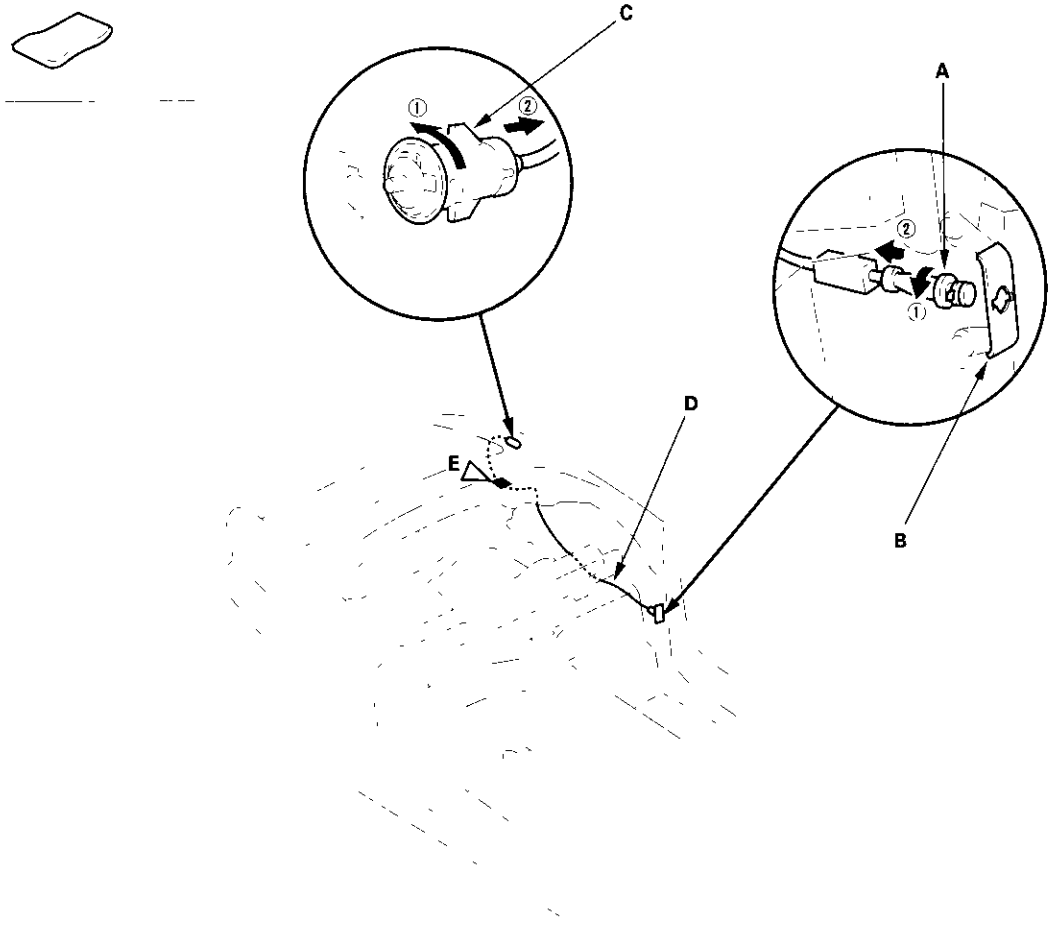


3. Remove the fuel fill door opener cable (D).

4. Install the cable in the reverse order of removal with a new cable cushion (E).

## Hood Release Handle Replacement

NOTE: Take care not to bend the cable.

1. Remove the kick panel (see page 20-69).
2. Remove the hood release handle as shown.
3. Install the handle in the reverse order of removal, and note these items:
   - Make sure the hood opener cable is connected properly.
   - Make sure the hood opens properly.

**Fastener Locations**

**A ▶ : Bolt, 2**

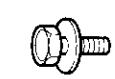

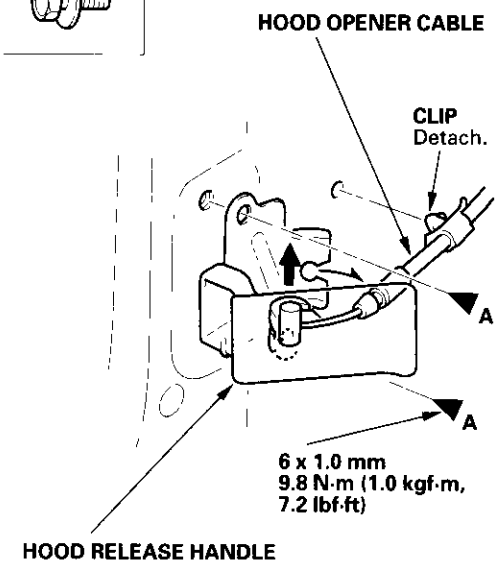


## Hood Latch Replacement

NOTE: Take care not to bend the cable.

### Replacement

1. Remove the air guide plate cover, then remove the hood latch as shown.
2. Install the latch in the reverse order of removal, and note these items:
   - Apply grease to the hood latch.
   - Make sure the hood opener cable is connected properly.
   - Adjust the hood latch alignment (see step 3 on page 20-94).
   - Make sure the hood locks securely.

**Fastener Locations**

**A ▶ : Bolt, 3** **B ▷ : Clip, 3**

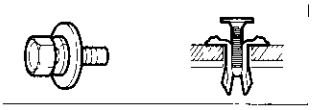




(cont'd)

## Hood Latch Replacement (cont'd)

### Grease Application

1. Remove the latch cover, and Apply multipurpose grease to each location of the hood latch indicated by the arrows.

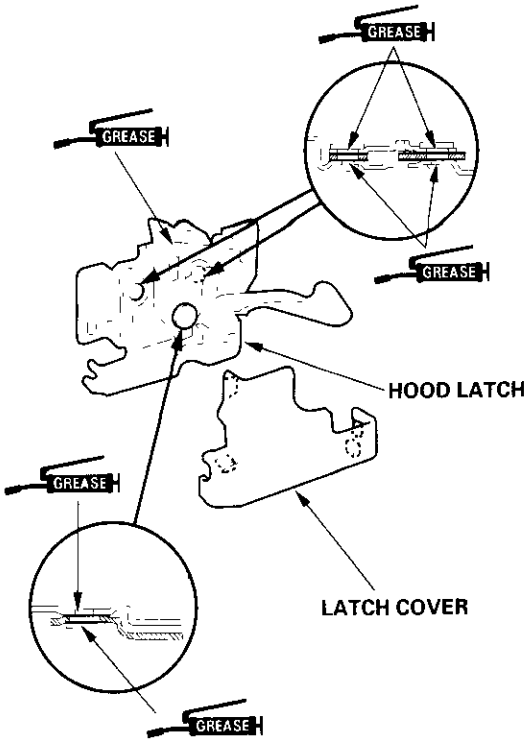


## Trunk Lid Latch Replacement

NOTE:
- Put on gloves to protect your hands.
- Take care not to scratch the body.
- Take care not to bend the cylinder rod.

1. Remove the trunk lid latch as shown.
2. Install the latch in the reverse order of removal, and note these items:
   - Make sure the connector is plugged in properly and the opener cable is connected properly.
   - Make sure the trunk lid opens properly and locks securely.

**Fastener Locations**

**A ▶ : Bolt, 2**

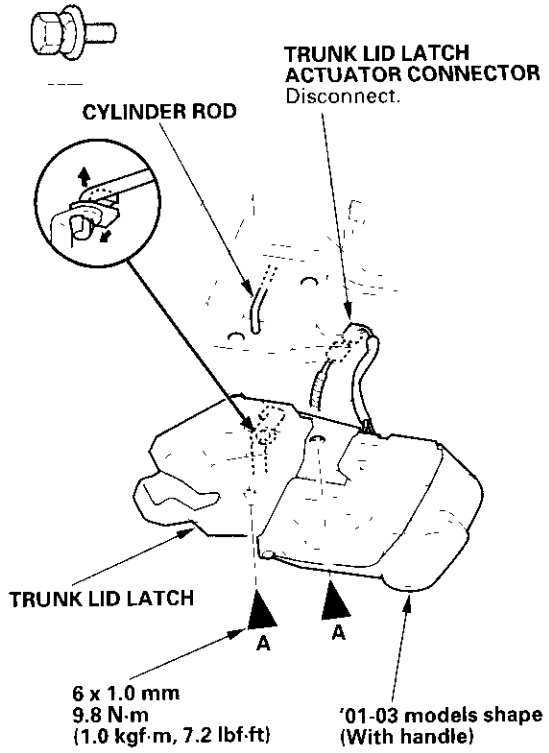

# Trunk Lid Lock Cylinder Replacement

NOTE:
- Take care not to scratch the body.
- Take care not to bend the cylinder rod.

1. Remove the trunk lid lock cylinder as shown.

2. Install the cylinder in the reverse order of removal, and note these items:

   - Make sure the cylinder rod is connected properly.
   - Make sure the trunk lid opens properly.

**Fastener Locations**

**A ▶ : Bolt, 2**

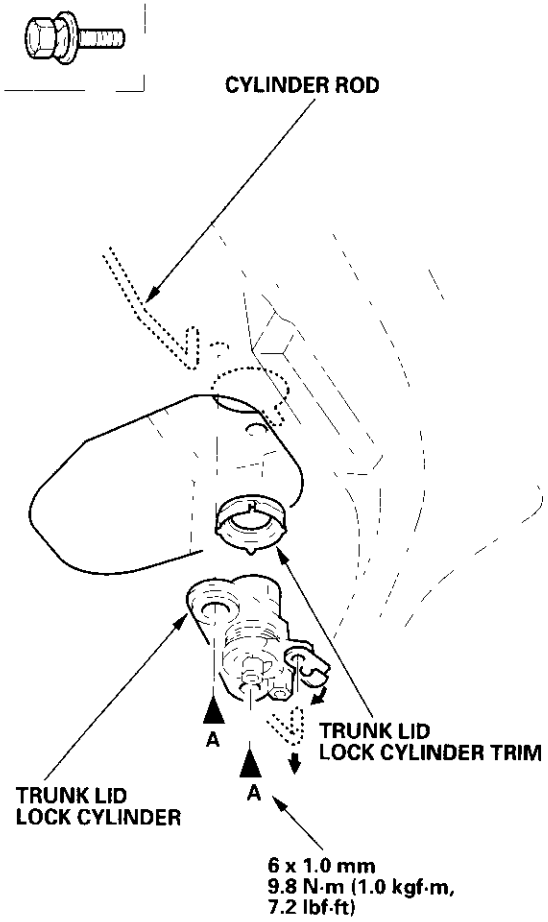

## Front Subframe Replacement

After loosening the subframe mounting bolts, be sure to replace them with new ones.

**Reference holes alignment:**

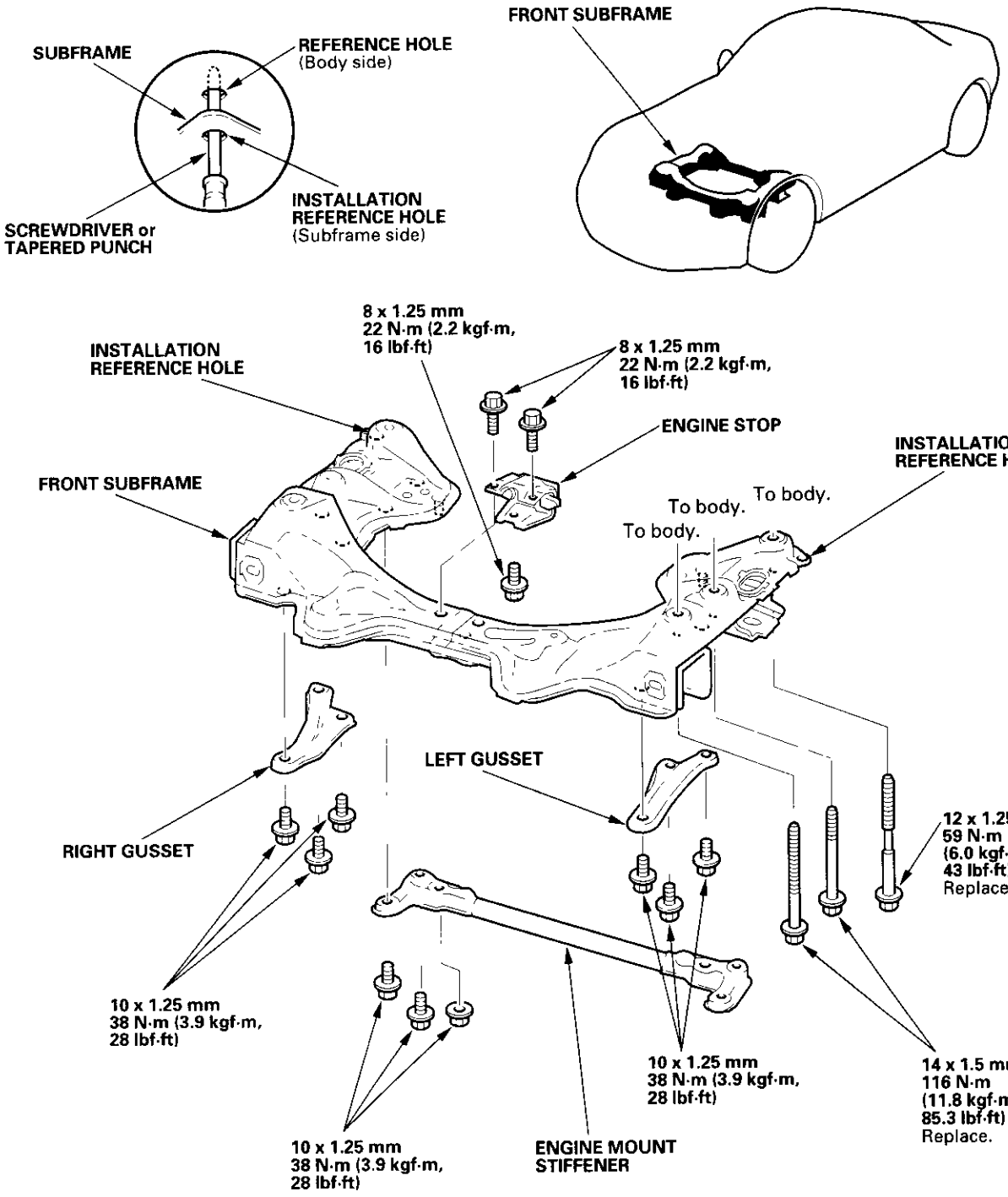

## Rear Subframe Replacement

After loosening the subframe mounting bolts, be sure to replace them with new ones.

**Reference holes alignment:**

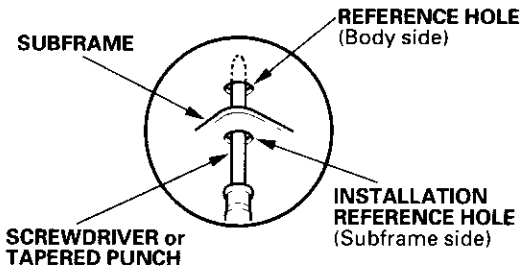


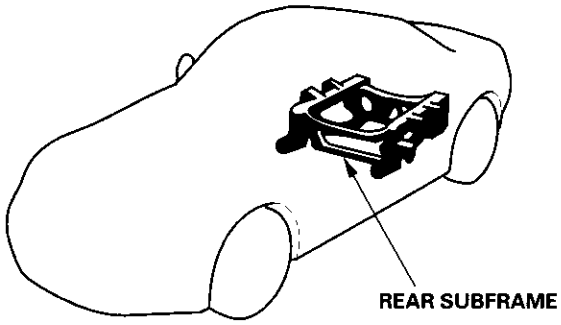


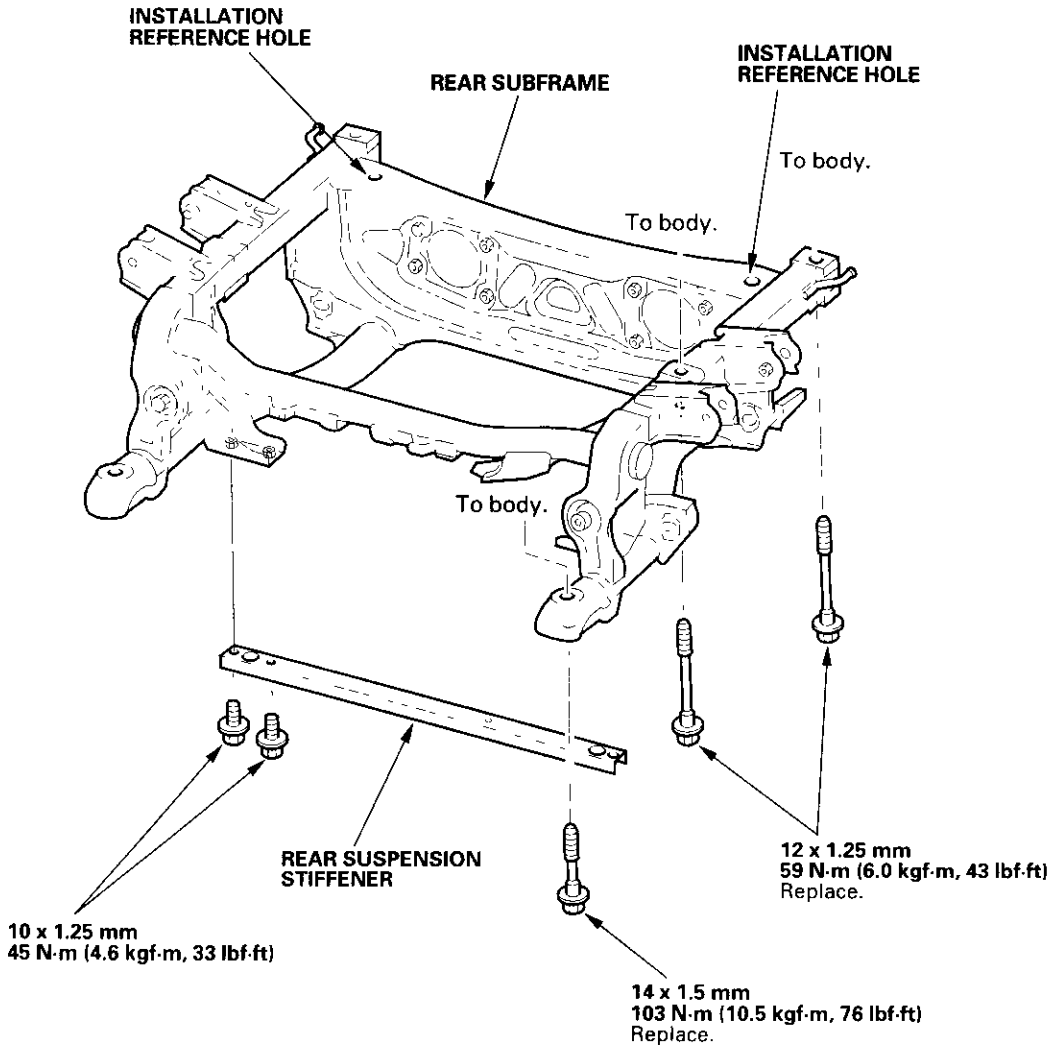

## Frame Repair Chart

### Top View

Unit: mm (in.)
ø: Inner diameter

| POINT | |
|---|---|
| a | For bumper beam ø10 (0.4) |
| b | For tie down ø23 x 30 (0.9 x 1.2) |
| c | For stabilizer ø24 (0.9) |
| d | For stabilizer ø24 (0.9) |
| e | For upper arm ø13 (0.5) |
| f | Damper center |
| g | For subframe ø17 (0.7) |

| POINT | |
|---|---|
| h | For upper arm ø13 (0.5) |
| i | For subframe ø17 (0.7) |
| j | For subframe ø17 (0.7) |
| k | Locate hole ø25 (1.0) |
| l | For transmission mount bracket ø13 (0.5) |
| m | For transmission mount bracket ø13 (0.5) |
| n | For transmission mount bracket ø13 (0.5) |

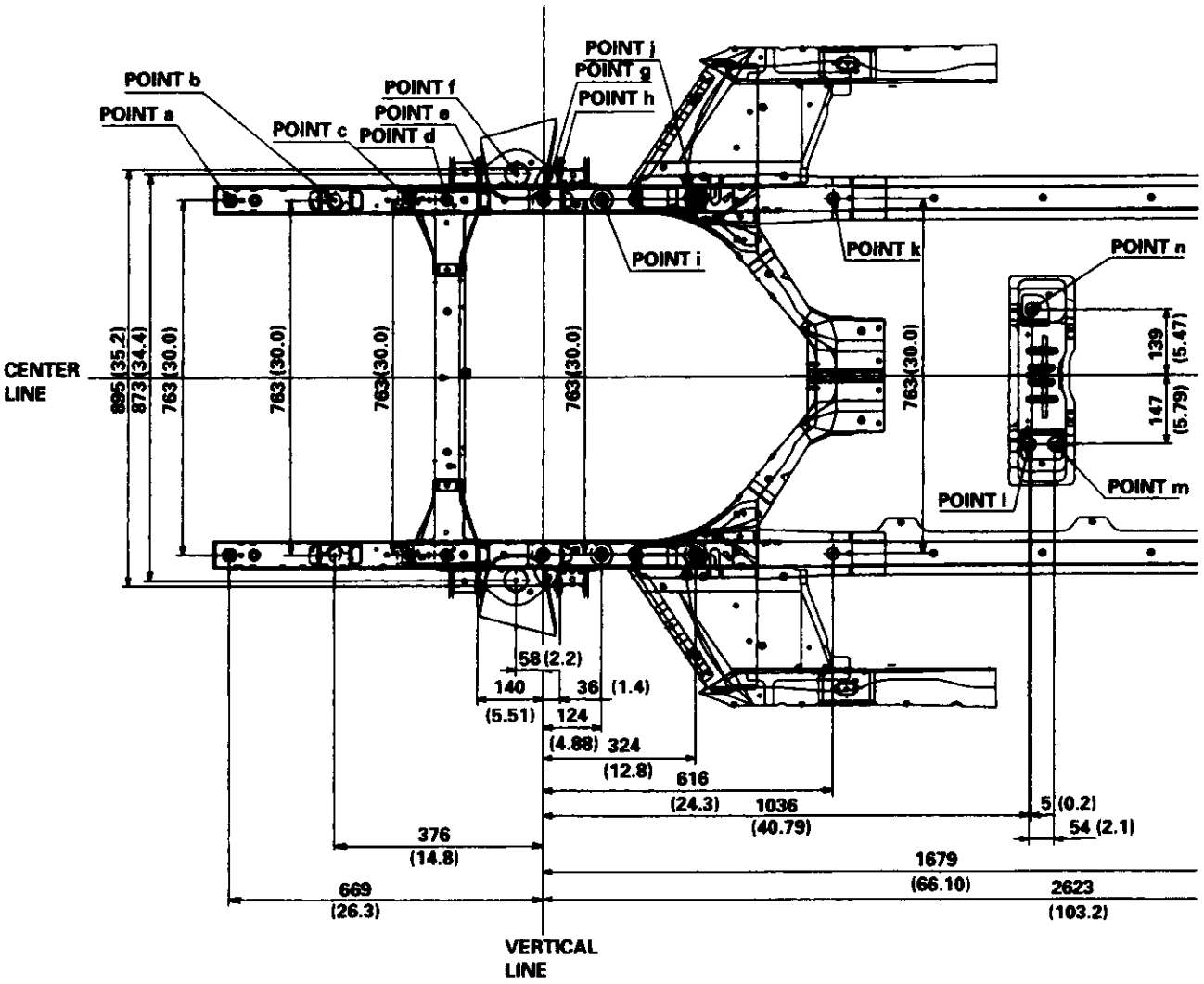

POINT

- o Locate hole ø15 (0.59)
- p For rear subframe ø16 (0.63)
- q For rear subframe ø16 (0.63)
- r Rear damper center ø50 (2.0)
- s For rear subframe ø16 (0.63)
- t Locate hole ø20 (0.8)

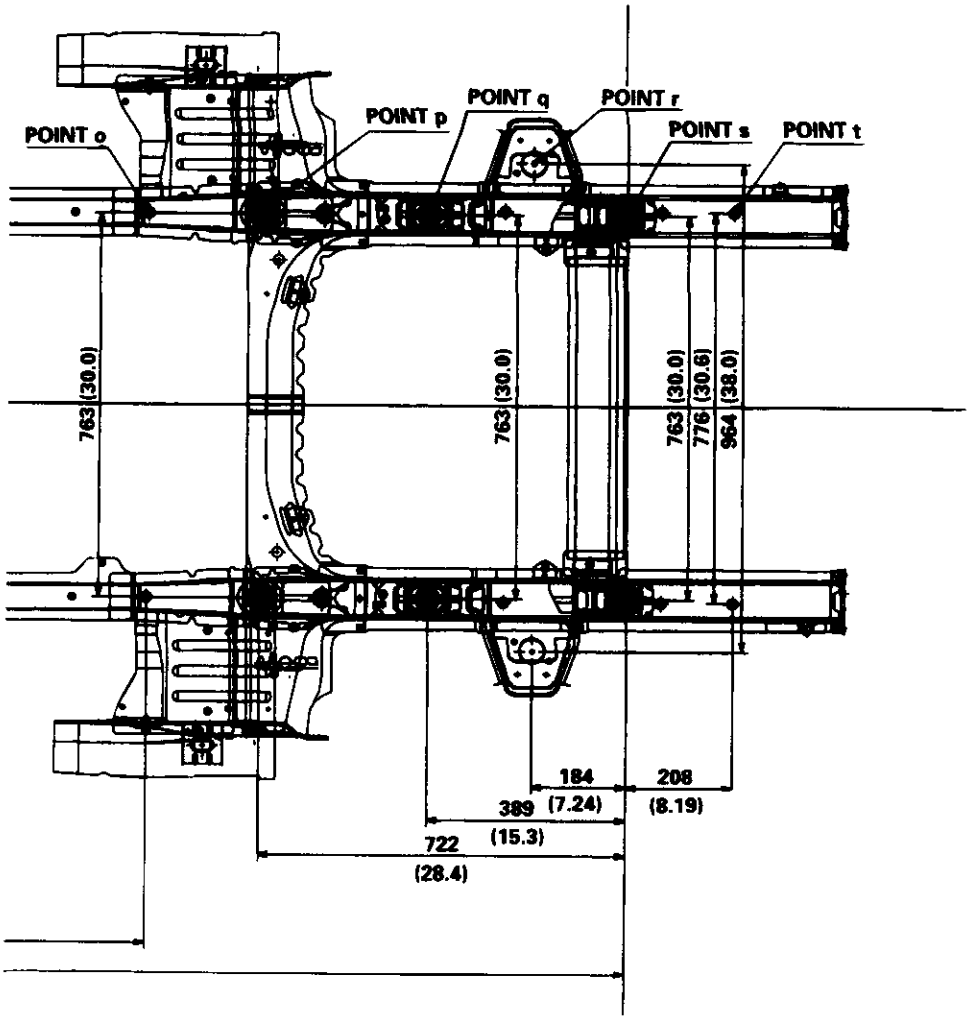


(cont'd)

## Frame Repair Chart (cont'd)

### Side View

Unit: mm (in.)
ø: Inner diameter

| POINT | | POINT | |
|---|---|---|---|
| a | For bumper beam ø10 (0.4) | h | For upper arm ø13 (0.5) |
| b | For tie down ø23 x 30 (0.9 x 1.2) | i | For subframe ø17 (0.7) |
| c | For stabilizer ø24 (0.9) | j | For subframe ø17 (0.7) |
| d | For stabilizer ø24 (0.9) | k | Locate hole ø25 (1.0) |
| e | For upper arm ø13 (0.5) | l | For transmission mount bracket ø13 (0.5) |
| f | Damper center | m | For transmission mount bracket ø13 (0.5) |
| g | For subframe ø17 (0.7) | n | For transmission mount bracket ø13 (0.5) |

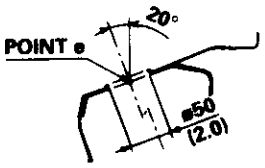


SECTION AA

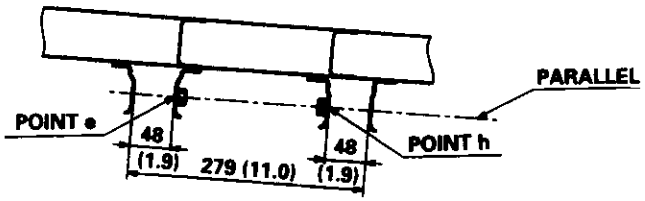


SECTION BB

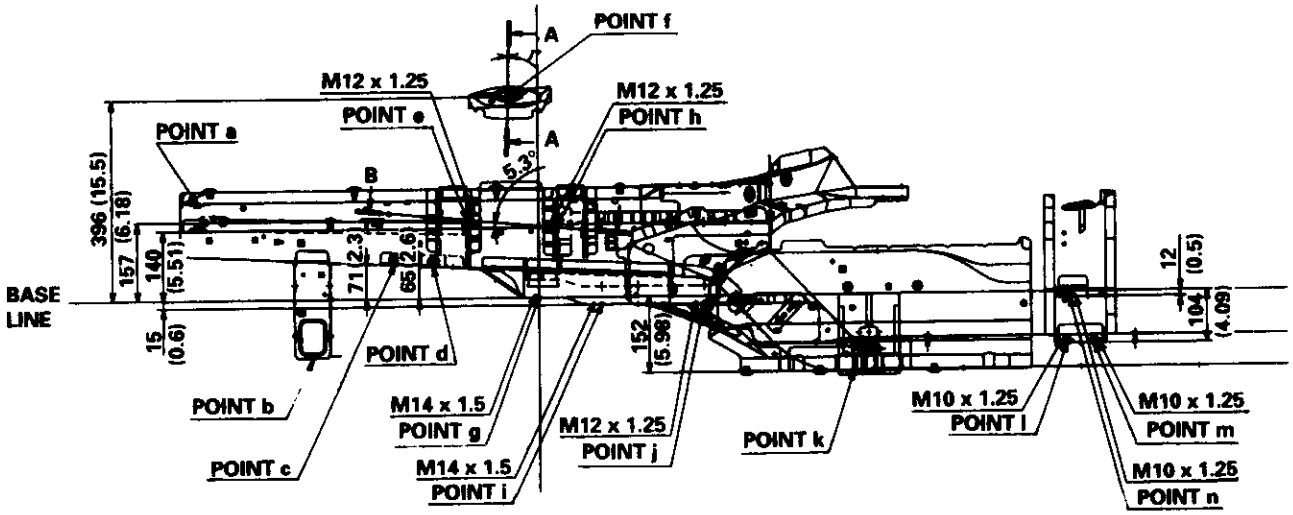

POINT

- o Locate hole ø15 (0.59)
- p For rear subframe ø16 (0.63)
- q For rear subframe ø16 (0.63)
- r Rear damper center ø50 (2.0)
- s For rear subframe ø16 (0.63)
- t Locate hole ø20 (0.8)

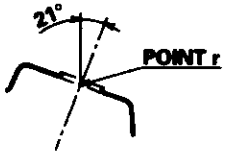


SECTION DD

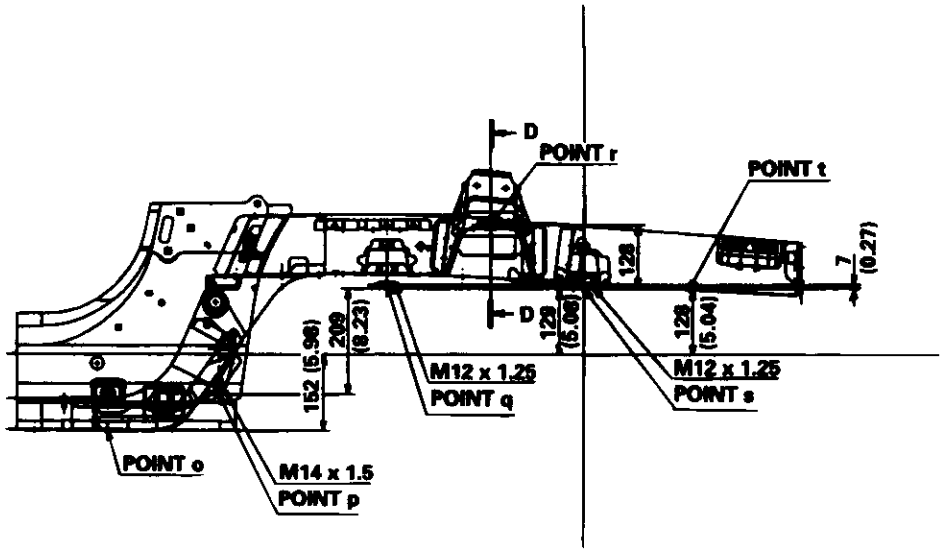

# HVAC (Heating, Ventilation, and Air Conditioning)

## Heating and Air Conditioning


Special Tools ..... 21-2
Component Location Index ..... 21-3
A/C Service Tips and Precautions ..... 21-6
A/C Refrigerant Oil Replacement ..... 21-6
General Troubleshooting Information ..... 21-8
DTC Troubleshooting Index ..... 21-9
Symptom Troubleshooting Index ..... 21-10
System Description ..... 21-11
Circuit Diagram ..... 21-14
DTC Troubleshooting ..... 21-16
Recirculation Control Motor Circuit Troubleshooting ..... 21-24
Heater Control Power and Ground Circuits Troubleshooting ..... 21-25
Condenser Fan Circuit Troubleshooting ..... 21-27
Radiator and Condenser Fans Common Circuit Troubleshooting ..... 21-28
Compressor Clutch Circuit Troubleshooting ..... 21-29
A/C Pressure Switch Circuit Troubleshooting ..... 21-31
Air Mix Control Motor Test and Replacement ..... 21-33
Mode Control Motor Test and Replacement ..... 21-34
Recirculation Control Motor Test and Replacement ..... 21-35
Evaporator Temperature Sensor Test ..... 21-36
Power Transistor Test ..... 21-36
Heater Control Panel Removal and Installation ..... 21-37
Blower/Evaporator Unit Removal and Installation .... 21-38
Blower/Evaporator Unit Components Replacement ..... 21-39
* Heater Unit/Core Replacement ..... 21-40
Dust and Pollen Filter Replacement ..... 21-42
Heater Valve Cable Adjustment ..... 21-43
Compressor Replacement ..... 21-44
Compressor Clutch Check ..... 21-46
Compressor Clutch Overhaul ..... 21-47
Compressor Thermal Protector Replacement ..... 21-49
Compressor Relief Valve Replacement ..... 21-49
Condenser Replacement ..... 21-50
Refrigerant Recovery ..... 21-51
System Evacuation ..... 21-52
System Charging ..... 21-53
Refrigerant Leak Tests ..... 21-54
A/C System Tests ..... 21-55


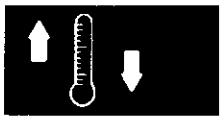

## Special Tools

| Ref.No. | Tool Number | Description | Qty |
|---|---|---|---|
| ① | 07SAZ-001000A | Backprobe Set | 2 |

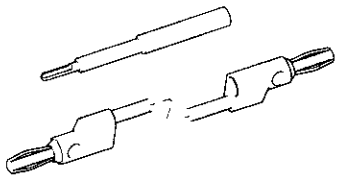

①

## Component Location Index

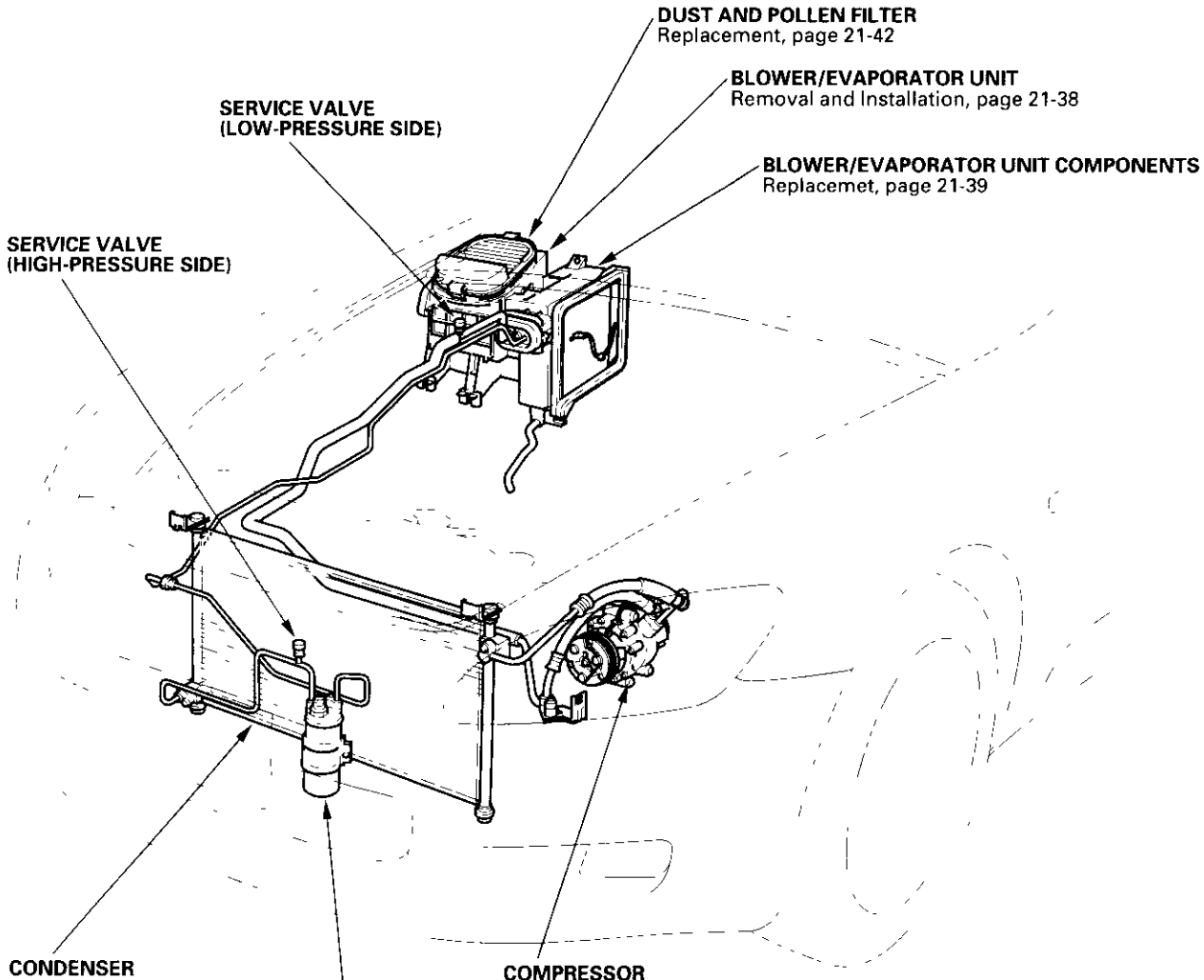


(cont'd)

## Component Location Index (cont'd)

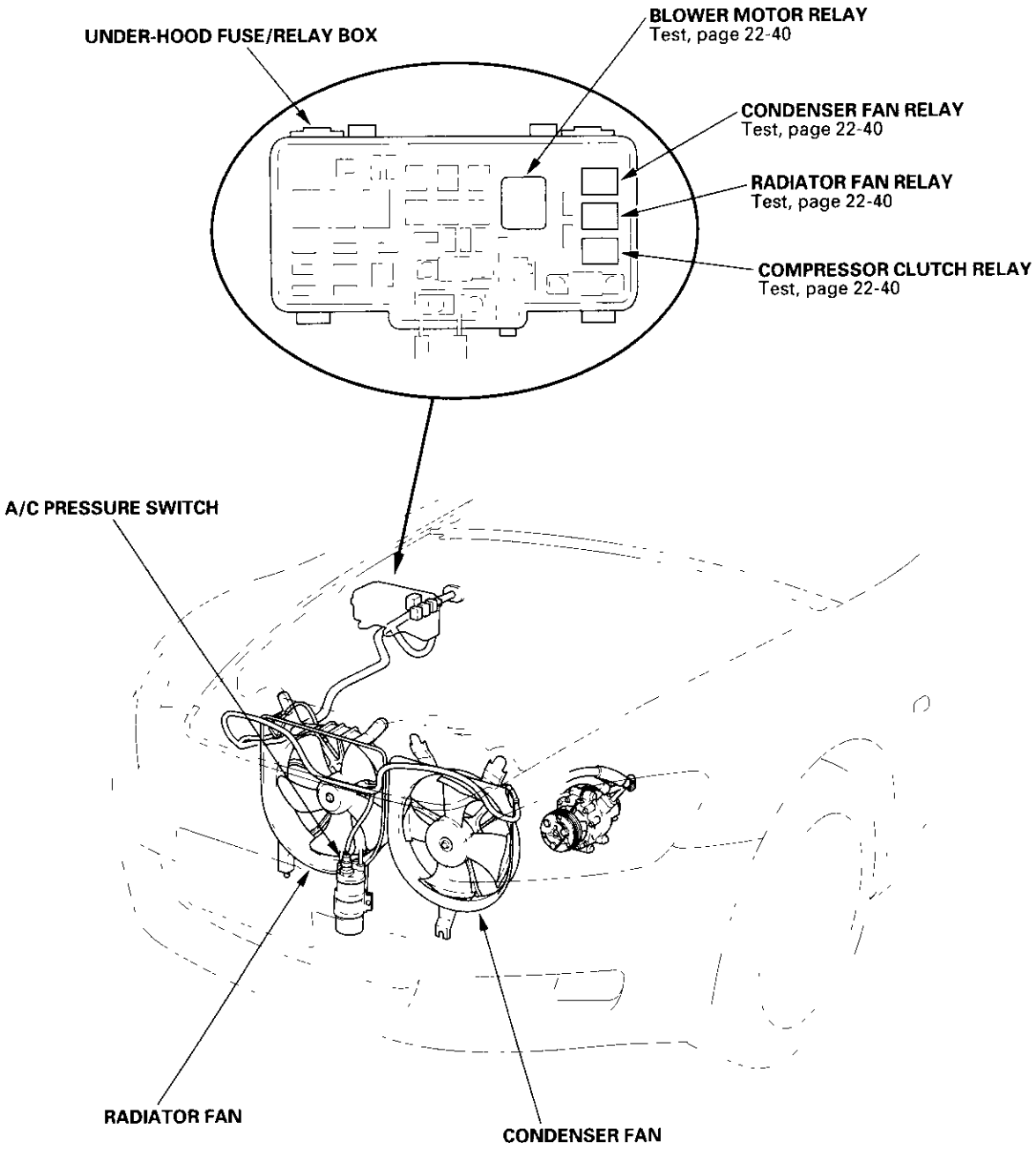

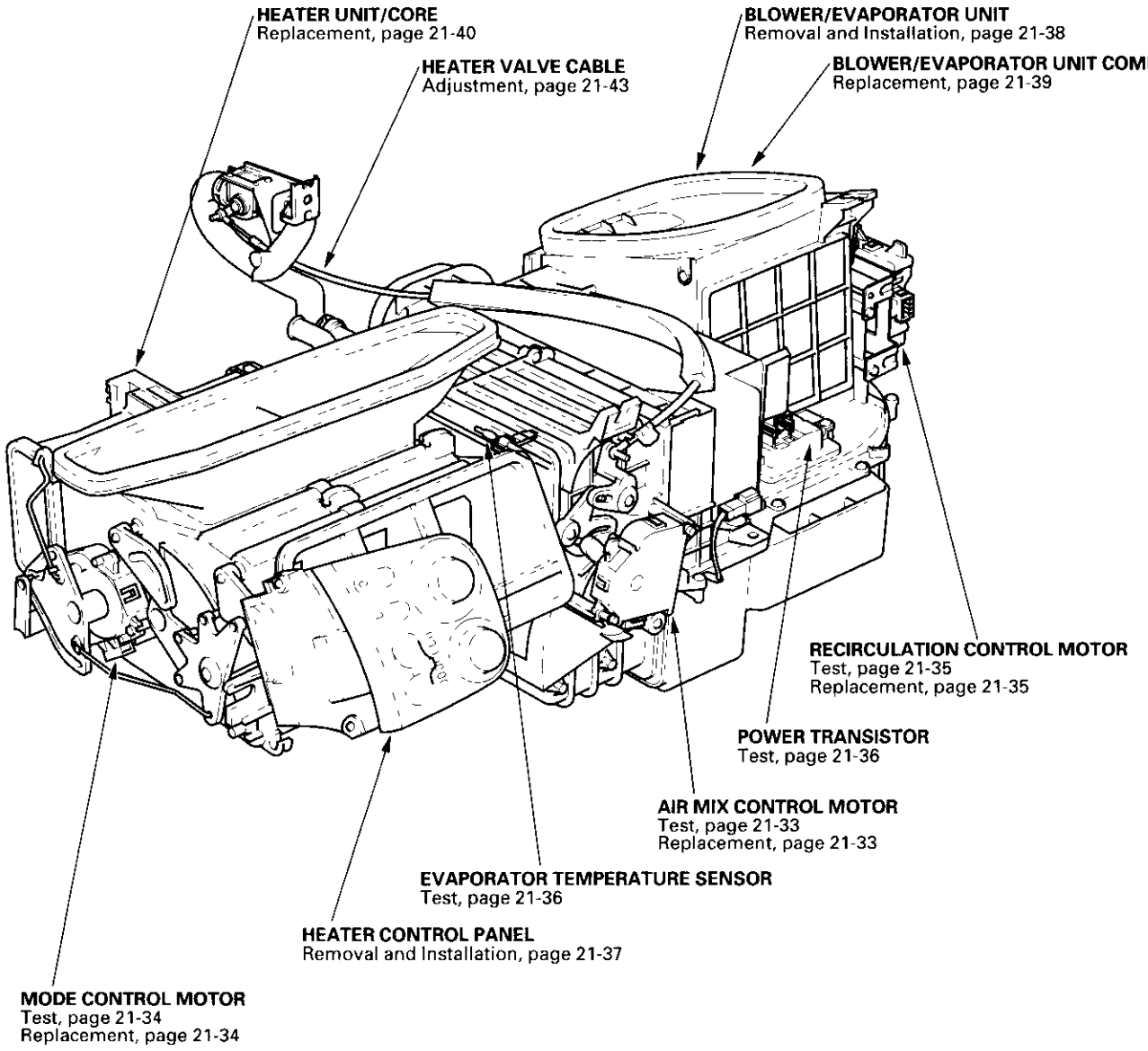
HEATER UNIT/CORE
Replacement, page 21-40
HEATER VALVE CABLE
Adjustment, page 21-43
BLOWER/EVAPORATOR UNIT
Removal and Installation, page 21-38
BLOWER/EVAPORATOR UNIT COMPONENTS
Replacement, page 21-39
RECIRCULATION CONTROL MOTOR
Test, page 21-35
Replacement, page 21-35
POWER TRANSISTOR
Test, page 21-36
AIR MIX CONTROL MOTOR
Test, page 21-33
Replacement, page 21-33
EVAPORATOR TEMPERATURE SENSOR
Test, page 21-36
HEATER CONTROL PANEL
Removal and Installation, page 21-37
MODE CONTROL MOTOR
Test, page 21-34
Replacement, page 21-34

## A/C Service Tips and Precautions

**⚠WARNING**

- Compressed air mixed with R-134a forms a combustible vapor.
- The vapor can burn or explode causing serious injury.
- Never use compressed air to pressure test R-134 a service equipment or vehicle air conditioning systems.

**⚠CAUTION**

- Air conditioning refrigerant or lubricant vapor can irritate your eyes, nose, or throat.
- Be careful when connecting service equipment.
- Do not breathe refrigerant or vapor.

The air conditioning system uses HFC-134a (R-134a) refrigerant and polyalkyleneglycol (PAG) refrigerant oil, which are not compatible with CFC-12 (R-12) refrigerant and mineral oil. Do not use R-12 refrigerant or mineral oil in this system, and do not attempt to use R-12 servicing equipment; damage to the air conditioning system or your servicing equipment will result.
Use only service equipment that is U.L.-listed and is certified to meet the requirements of SAE J2210 to remove R-134a from the air conditioning system.

If accidental system discharge occurs, ventilate the work area before resuming service.

R-134a service equipment or vehicle air conditioning systems should not be pressure tested or leak tested with compressed air.

Additional health and safety information may be obtained from the refrigerant and lubricant manufacturers.

- Always disconnect the negative cable from the battery whenever replacing air conditioning parts.
- Keep moisture and dirt out of the system. When disconnecting any lines, plug or cap the fittings immediately; don't remove the caps or plugs until just before you reconnect each line.
- Before connecting any hose or line, apply a few drops of refrigerant oil to the O-ring.
- When tightening or loosening a fitting, use a second wrench to support the matching fitting.
- When discharging the system, use a R-134a refrigerant recovery/recycling/charging station; don't release refrigerant into the atmosphere.

## A/C Refrigerant Oil Replacement

Recommended PAG oil: KEIHIN SP-10:

- P/N 38897-P13-A01AH: 120 mℓ (4 fl·oz)
- P/N 38899-P13-A01: 40 mℓ (1 1/3 fl·oz)

Add the recommended refrigerant oil in the amount listed if you replace any of the following parts.

- To avoid contamination, do not return the oil to the container once dispensed, and never mix it with other refrigerant oils.
- Immediately after using the oil, reinstall the cap on the container, and seal it to avoid moisture absorption.
- Do not spill the refrigerant oil on the vehicle; it may damage the paint. If it gets on the paint, wash it off immediately.

Condenser ..... 25 mℓ (5/6 fl·oz, 0.9 Imp·oz)
Evaporator ..... 40 mℓ (1 1/3 fl·oz, 1.4 Imp·oz)
Line or hose ..... 10 mℓ (1/3 fl·oz, 0.4 Imp·oz)
Receiver/Dryer .... 10 mℓ (1/3 fl·oz, 0.4 Imp·oz)
Leakage repair .... 25 mℓ (5/6 fl·oz, 0.9 Imp·oz)
Compressor ..... For compressor replacement, subtract the volume of oil drained from the removed compressor from 130 mℓ (4 1/3 fl·oz, 4.6 Imp·oz), and drain the calculated volume of oil from the new compressor: 130 mℓ (4 1/3 fl·oz, 4.6 Imp·oz) − Volume of removed compressor = Volume to drain from new compressor.

NOTE: Even if no oil is drained from the removed compressor, don't drain more than 50 mℓ (1 2/3 fl·oz, 1.8 Imp·oz) from the new compressor.

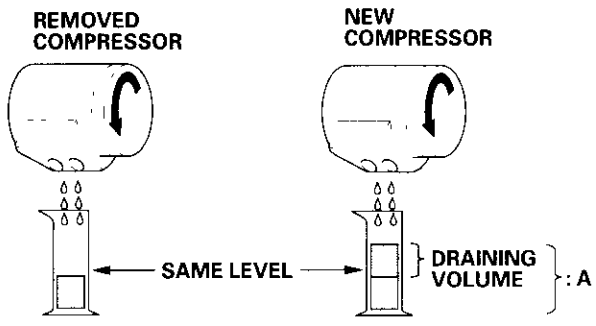


**A: 130 mℓ (4 1/3 fl·oz, 4.6 Imp·oz)**

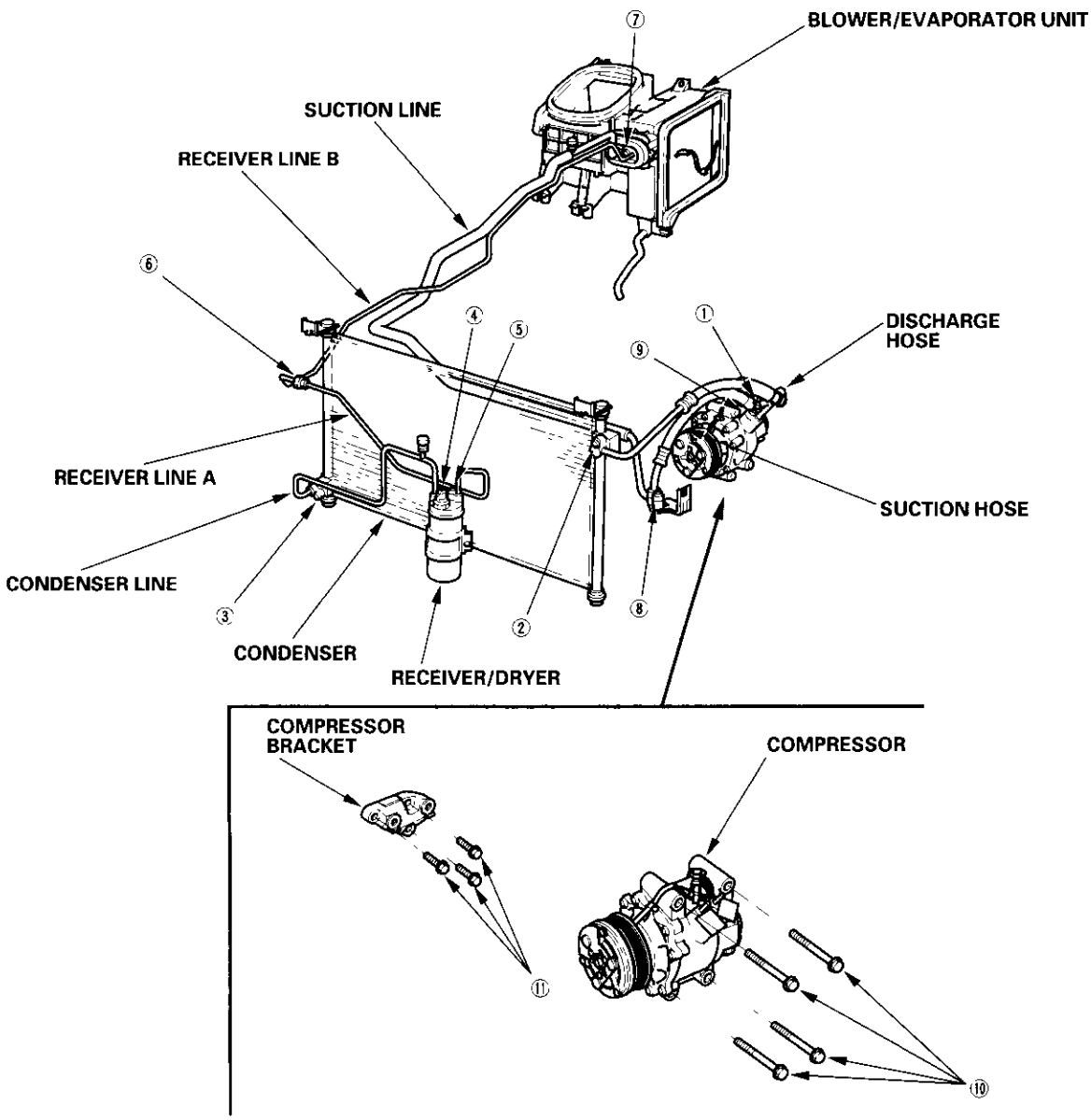


① Discharge hose to the compressor (6 x 1.0 mm) : 9.8 N·m (1.0 kgf·m, 7.2 lbf·ft)
② Discharge hose to the condenser (6 x 1.0 mm) : 9.8 N·m (1.0 kgf·m, 7.2 lbf·ft)
③ Condenser line to the condenser (6 x 1.0 mm) : 9.8 N·m (1.0 kgf·m, 7.2 lbf·ft)
④ Condenser line to the receiver/dryer (6 x 1.0mm) : 9.8 N·m (1.0 kgf·m, 7.2 lbf·ft)
⑤ Receiver line A to the receiver/dryer (6 x 1.0 mm) : 9.8 N·m (1.0 kgf·m, 7.2 lbf·ft)
⑥ Receiver line A to the receiver line B : 1.3 N·m (1.3 kgf·m, 9.4 lbf·ft)
⑦ Receiver line B and the suction line to the evaporator (6 x 1.0 mm) : 9.8 N·m (1.0 kgf·m, 7.2 lbf·ft)
⑧ Suction hose to the suction line (6 x 1.0 mm) : 9.8 N·m (1.0 kgf·m, 7.2 lbf·ft)
⑨ Suction hose to the compressor (6 x 1.0 mm) : 9.8 N·m (1.0 kgf·m, 7.2 lbf·ft)
⑩ Compressor to the compressor bracket (10 x 1.25 mm) : 44 N·m (4.5 kgf·m, 33 lbf·ft)
⑪ Compressor bracket to the engine block (8 x 1.25 mm) : 22 N·m (2.2 kgf·m, 16 lbf·ft)

## General Troubleshooting Information

### How to Retrieve a DTC

The heater control panel has a self-diagnosis function. To run the self-diagnosis function, do the following:

1. Set the mode control dial on the Vent position.
2. Turn the ignition switch ON (II).
3. Within 5 seconds after turning the ignition switch on, press the recirculation control switch the required number of times depending on the recirculation indicator status:

   - If the indicator is ON, press the recirculation control switch 5 times.
   - If the indicator is OFF, press the recirculation control switch 6 times.

   The recirculation indicator will come on for 2 seconds, then blink the Diagnostic Trouble Code (DTC) to indicate a faulty component. If no DTC's are found, the indicator will not blink after the initial 2 second light.

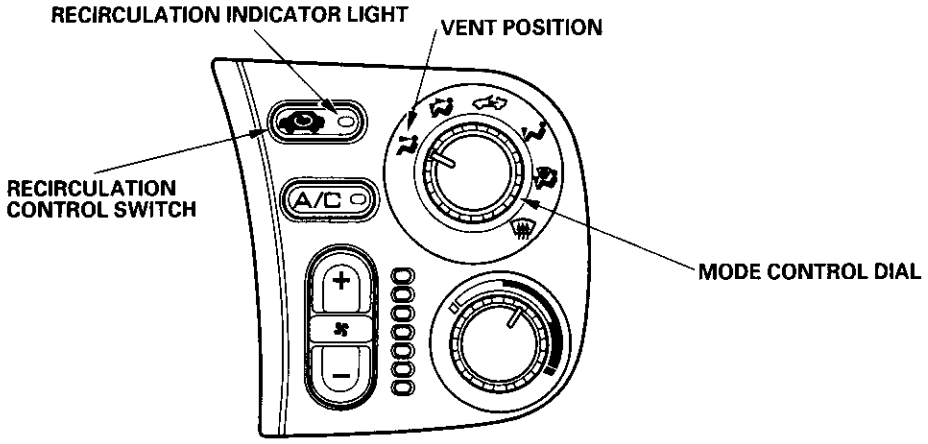


**Example of DTC Indication Pattern (DTC 2):**

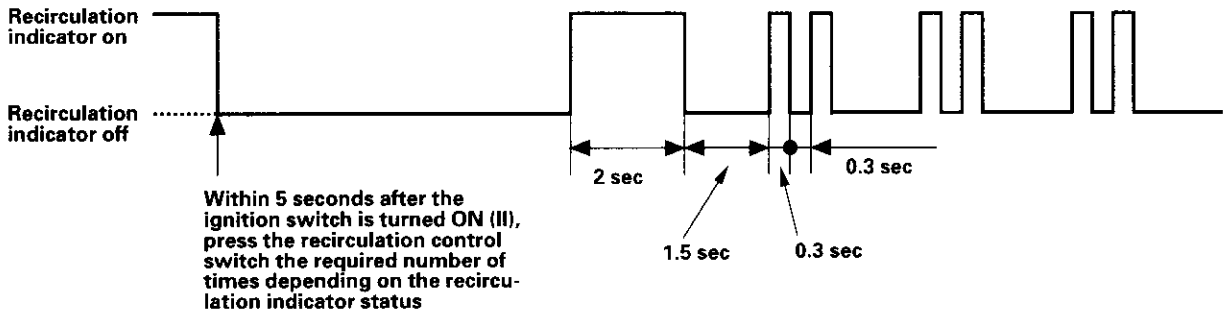


**Resetting the Self-diagnosis Function**

Turn the ignition switch OFF to cancel the self-diagnosis function. After completing repair work, run the self-diagnosis function again to make sure that there are no other malfunctions.

## DTC Troubleshooting Index

| DTC (Recirculation Indicator Blinks) | Detection item | Page |
|---|---|---|
| 1 | A problem in the air mix control motor circuit | (see page 21-16) |
| 2 | A problem in the mode control motor circuit | (see page 21-17) |
| 3 | A problem in the blower motor circuit | (see page 21-19) |
| 4 | A problem in the evaporator temperature sensor circuit | (see page 21-22) |

- In case of multiple problems, the recirculation indicator will indicate only the DTC with the least number of blinks.
- In case of an intermittent failure, the heater control panel will store the DTC until the ignition is turned off.

## Symptom Troubleshooting Index

| Symptom | Diagnostic procedure | Also check for |
|---|---|---|
| Recirculation control doors do not change between Fresh and Recirculate | Recirculation Control Motor Circuit Troubleshooting (see page 21-24) | • Blown fuse No. 20 (7.5A) in the under-dash fuse/relay box<br>• Cleanliness and tightness of all connectors |
| Both heater and A/C do not work | Heater Control Power and Ground Circuits Troubleshooting (see page 21-25) | • Blown fuse No. 54 (30A) in the main under-hood fuse/relay box, and No. 20 (7.5A) and No. 25 (7.5 A) in the under-dash fuse/relay box<br>• Poor ground at No. G402<br>• Cleanliness and tightness of all connectors |
| Condenser fan does not run at all (but radiator fan runs with the A/C on) | Condenser Fan Circuit Troubleshooting (see page 21-27) | • Blown fuse No. 58 (20A) in the main under-hood fuse/relay box, and No. 20 (7.5A) in the under-dash fuse/relay box<br>• Poor ground at No. G201<br>• Cleanliness and tightness of all connectors |
| Both fans do not run with the A/C on | Radiator and Condenser Fans Common Circuit Troubleshooting (see page 21-28) | • Blown fuse No. 57 (20A) and No. 58 (20A) in the main under-hood fuse/relay box, and No. 20 (7.5A) in the under-dash fuse/relay box<br>• Poor ground at No. G201<br>• Cleanliness and tightness of all connectors |
| Compressor clutch does not engage | Compressor Clutch Circuit Troubleshooting (see page 21-29) | • Blown fuse No. 58 (20A) in the main under-hood fuse/relay box, and No. 20 (7.5A) in the under-dash fuse/relay box<br>• Cleanliness and tightness of all connectors |
| A/C System does not come on (both fans and compressor) | A/C Pressure Switch Circuit Troubleshooting (see page 21-31) | Cleanliness and tightness of all connectors |

## System Description

The air conditioning system removes heat from the passenger compartment by circulating refrigerant through the system as shown below.

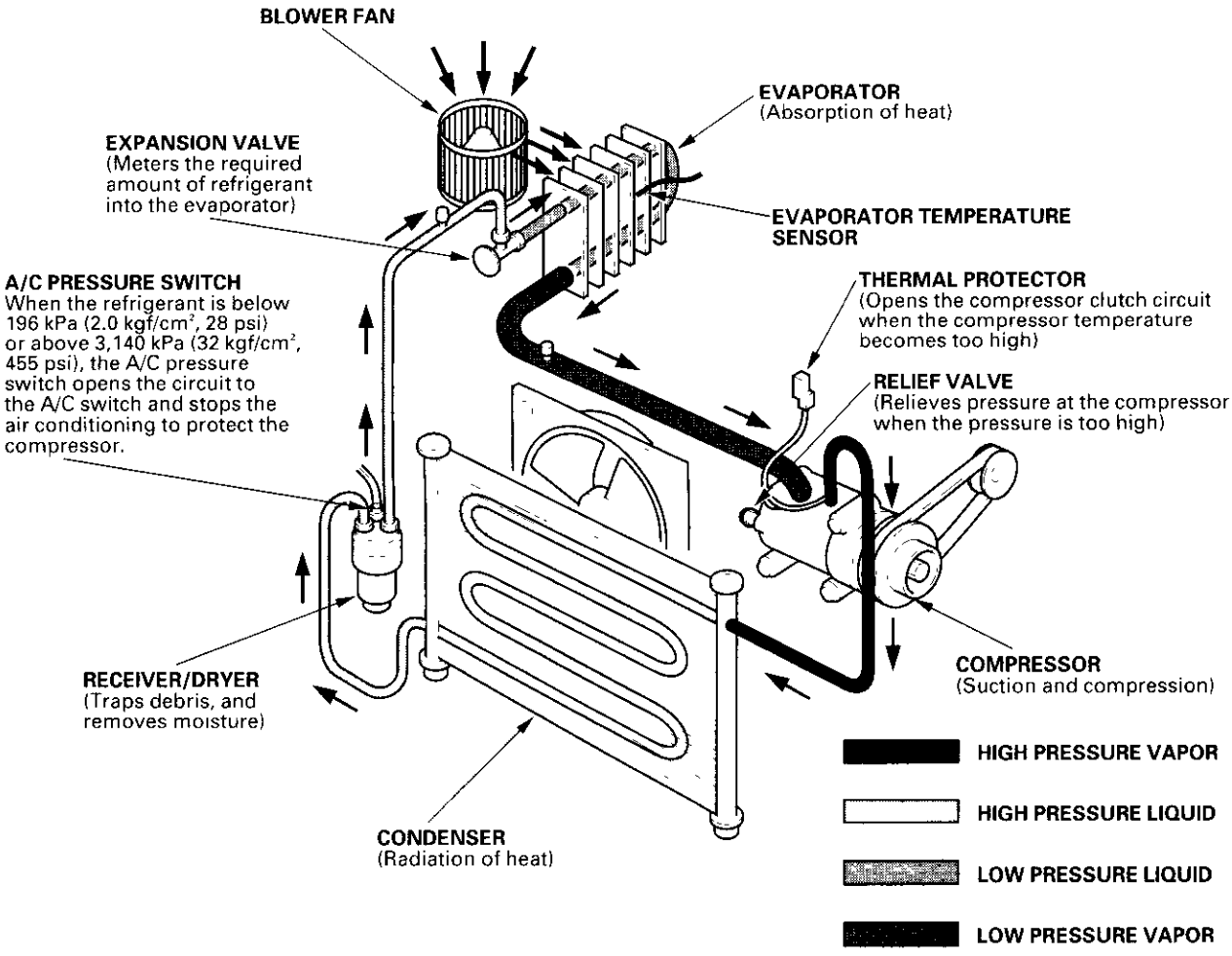


This vehicle uses HFC-134a (R-134a) refrigerant which does not contain chlorofluorocarbons. Pay attention to the following service items:

- Do not mix refrigerants CFC-12 (R-12) and HFC-134a (R-134a). They are not compatible.
- Use only the recommended polyalkyleneglycol (PAG) refrigerant oil (KEIHIN SP-10) designed for the R-134a compressor. Intermixing the recommended (PAG) refrigerant oil with any other refrigerant oil will result in compressor failure.
- All A/C system parts (compressor, discharge line, suction line, evaporator, condenser, receiver/dryer, expansion valve, O-rings for joints) have to be designed for refrigerant R-134a. Do not exchange with R-12 parts.
- Use a halogen gas leak detector designed for refrigerant R-134a.
- R-12 and R-134a refrigerant servicing equipment are not interchangeable. Use only a recovery/recycling/charging station that is U.L.-listed and is certified to meet the requirements of SAE J2210 to service R-134a air conditioning system.
- Always recover the refrigerant R-134a with an approved recovery/recycling/charging station before disconnecting any A/C fitting.

(cont'd)

## System Description (cont'd)

### Heater Control Panel Inputs and Outputs

**HEATER CONTROL PANEL 30P CONNECTOR**

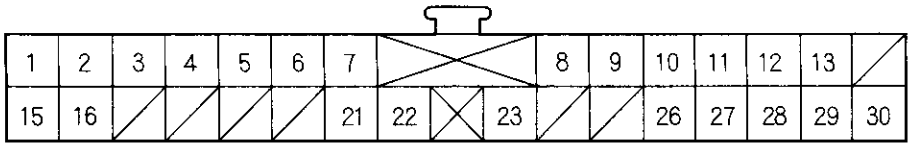


Wire side of female terminals

| Cavity | Wire color | Signal | |
|---|---|---|---|
| 1 | PNK | AIR MIX COOL | OUTPUT |
| 2 | PNK/BLU | AIR MIX HOT | OUTPUT |
| 3 | YEL/BLU | MODE DEF | OUTPUT |
| 4 | YEL/RED | MODE VENT | OUTPUT |
| 5 | GRY | AIR MIX POTENTIAL +5 V | OUTPUT |
| 6 | PNK/BLK | AIR MIX POTENTIAL | OUTPUT |
| 7 | BRN | EVAPORATOR TEMPERATURE SENSOR | OUTPUT |
| 8 | YEL/GRN | MODE 2 | OUTPUT |
| 9 | BRN/WHT | MODE 1 | OUTPUT |
| 10 | LT GRN | SENSOR COMMON GROUND | INPUT |
| 11 | BLU/RED | BLOWER FEEDBACK | INPUT |
| 12 | BLU/WHT | A/C PRESSURE SWITCH | INPUT |
| 13 | BLU/YEL | POWER TRANSISTOR | OUTPUT |
| 14 | ——— | ——— | ——— |
| 15 | GRN/WHT | FRESH | INPUT |
| 16 | GRN/YEL | RECIRCULATE | INPUT |
| 17 | ——— | ——— | ——— |
| 18 | ——— | ——— | ——— |
| 19 | ——— | ——— | ——— |
| 20 | ——— | ——— | ——— |
| 21 | YEL | MODE 4 | OUTPUT |
| 22 | BLK/WHT | MODE 3 | OUTPUT |
| 23 | BLK/WHT | DIMMING CANCEL CIRCUIT (In the gauge assembly) | OUTPUT |
| 24 | ——— | ——— | ——— |
| 25 | ——— | ——— | ——— |
| 26 | BLK | GROUND | INPUT |
| 27 | RED/BLK | COMBINATION LIGHT SWITCH (Via the taillights relay) | INPUT |
| 28 | RED | DASH LIGHTS BRIGHTNESS CONTROLLER (In the gauge assembly) | OUTPUT |
| 29 | WHT/RED | +B (Power) | INPUT |
| 30 | BLK/YEL | IG2 (Power) | INPUT |

## Circuit Diagram

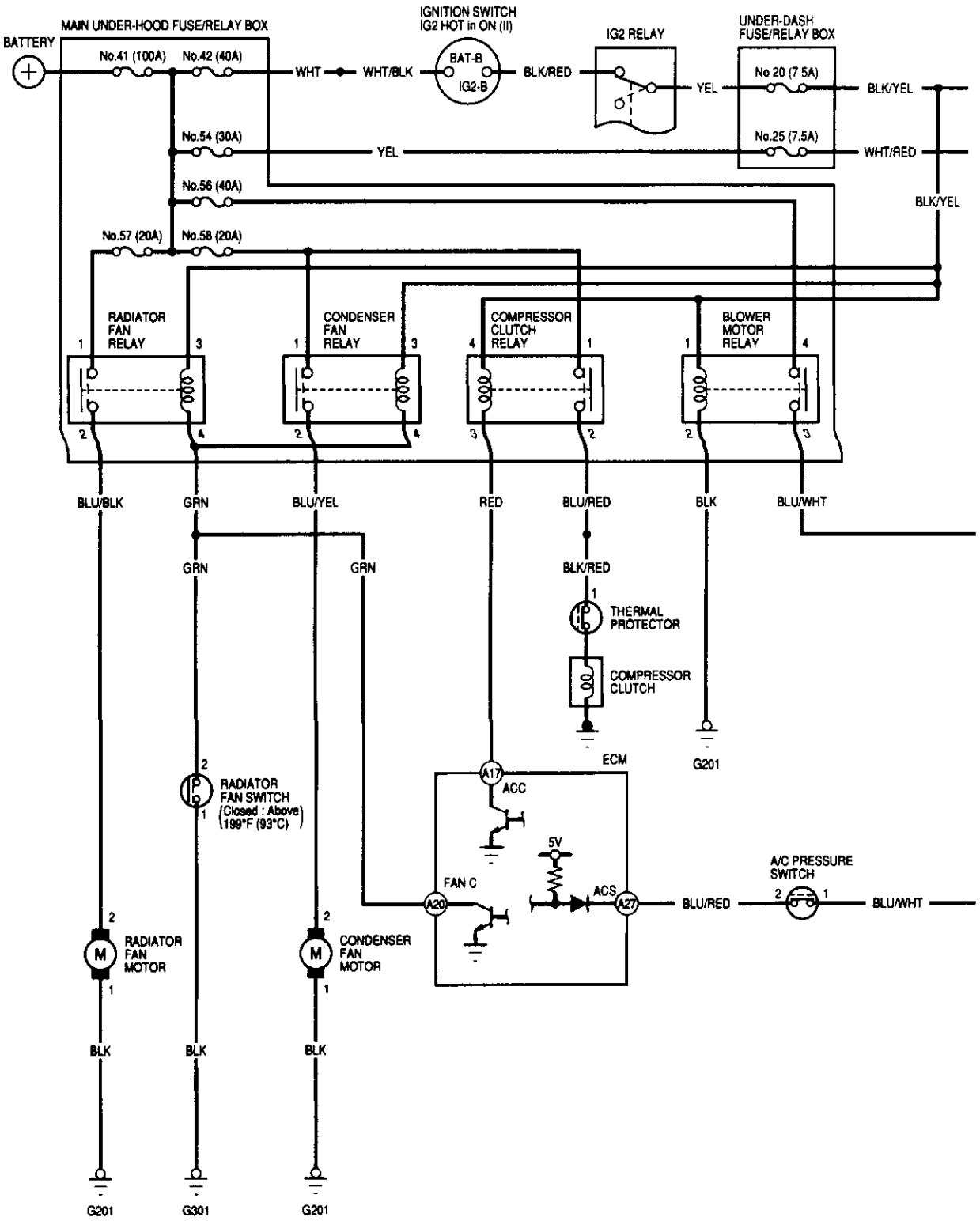

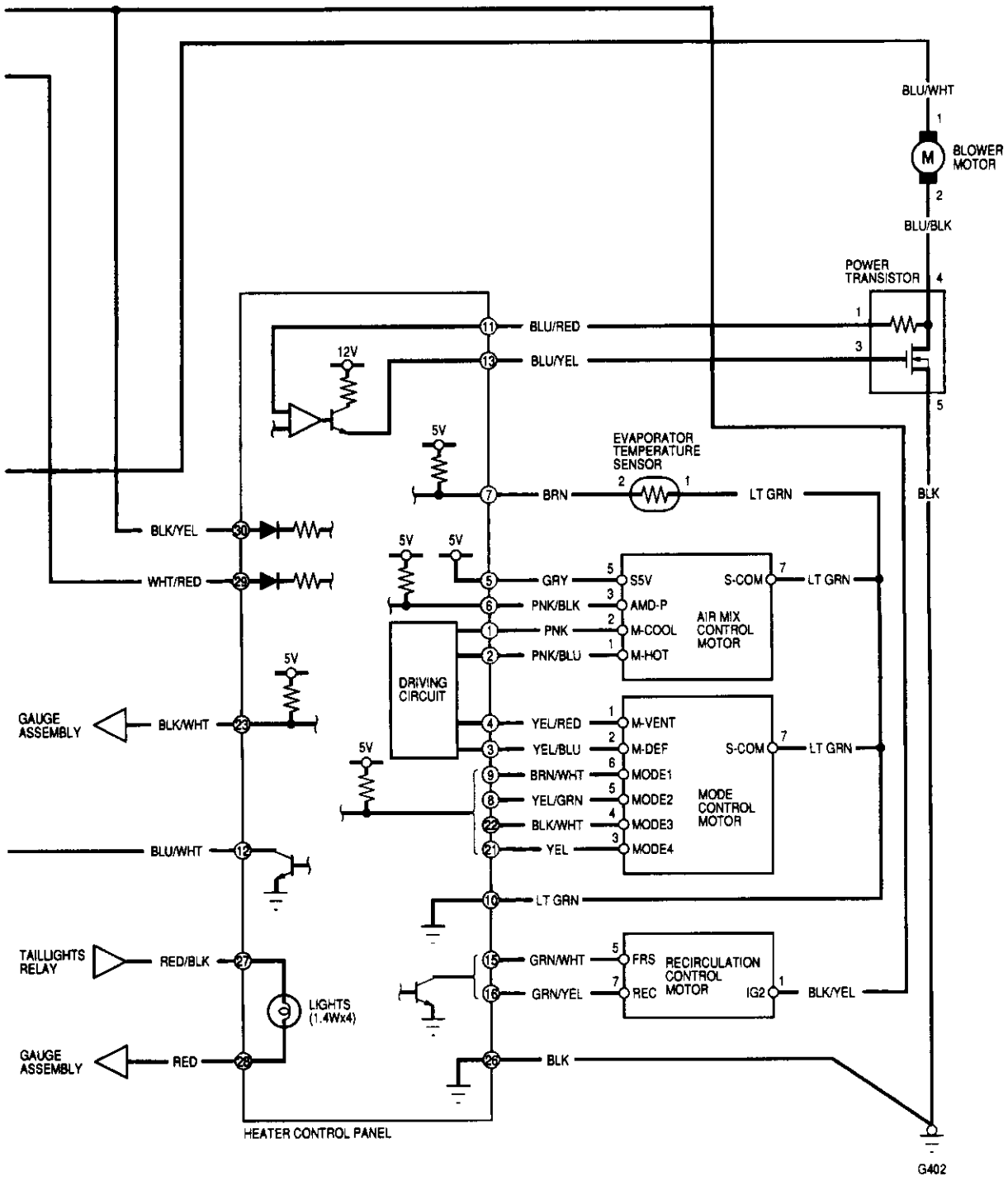
BLU/WHT
BLOWER MOTOR
BLU/BLK
POWER TRANSISTOR
BLU/RED
BLU/YEL
12V
5V
EVAPORATOR TEMPERATURE SENSOR
BRN
LT GRN
BLK
BLK/YEL
WHT/RED
GRY
PNK/BLK
PNK
PNK/BLU
S5V
AMD-P
M-COOL
M-HOT
AIR MIX CONTROL MOTOR
S-COM
DRIVING CIRCUIT
GAUGE ASSEMBLY
BLK/WHT
YEL/RED
YEL/BLU
M-VENT
M-DEF
BRN/WHT
YEL/GRN
BLK/WHT
YEL
MODE1
MODE2
MODE3
MODE4
MODE CONTROL MOTOR
BLU/WHT
TAILLIGHTS RELAY
RED/BLK
LIGHTS (1.4Wx4)
GRN/WHT
GRN/YEL
FRS
REC
RECIRCULATION CONTROL MOTOR
IG2
RED
HEATER CONTROL PANEL
G402

## DTC Troubleshooting

### DTC 1: A problem in the air mix control motor circuit

1. Disconnect the air mix control motor 7P connector.
2. Test the air mix control motor (see page 21-33).

   *Is the air mix control motor OK?*

   **YES** – Go to step 3.

   **NO** – Go to step 7.
3. Disconnect the heater control panel 30P connector.
4. Check for continuity between body ground and the heater control panel 30P connector terminals No. 1, 2, 5, 6, and 10 individually.

**HEATER CONTROL PANEL 30P CONNECTOR**

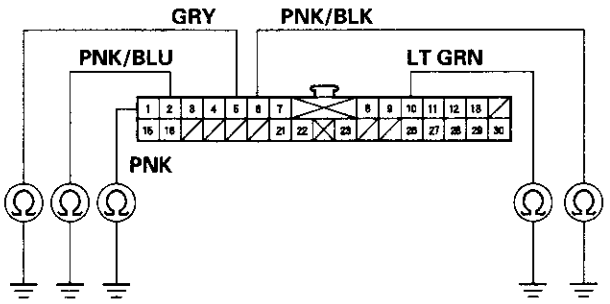


Wire side of female terminals

*Is there continuity?*

**YES** – Repair any short to body ground in the wire(s) between the heater control panel and the air mix control motor. ■

**NO** – Go to step 5.

5. Turn the ignition switch ON (II), and check the same terminals for voltage.

**HEATER CONTROL PANEL 30P CONNECTOR**

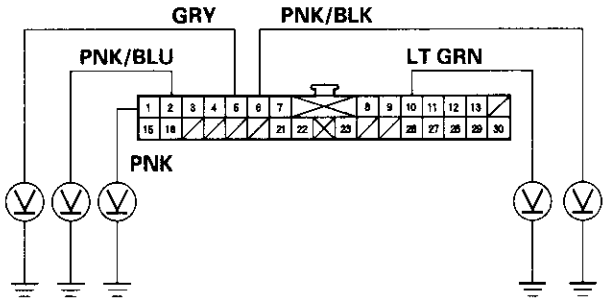


Wire side of female terminals

*Is there any voltage?*

**YES** – Repair any short to power in the wire(s) between the heater control panel and the air mix control motor. This short may also damage the heater control panel. Repair the short to power before replacing the heater control panel. ■

**NO** – Go to step 6.

6. Turn the ignition switch OFF, and check for continuity between the following terminals of the heater control panel 30P connector and the air mix control motor 7P connector.

| 30P: | 7P: |
|---|---|
| No. 1 | No. 2 |
| No. 2 | No. 1 |
| No. 5 | No. 5 |
| No. 6 | No. 3 |
| No. 10 | No. 7 |

**HEATER CONTROL PANEL 30P CONNECTOR**
Wire side of female terminals

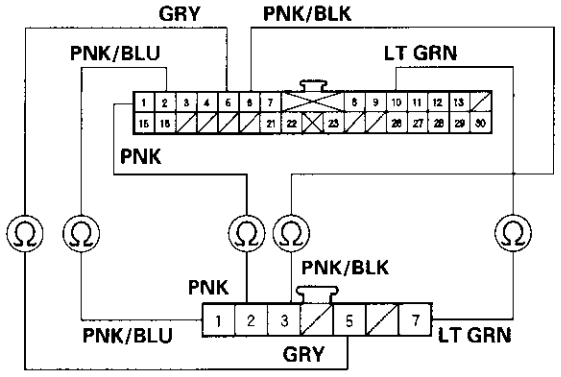


**AIR MIX CONTROL MOTOR 7P CONNECTOR**
Wire side of female terminals

*Is there continuity?*

**YES**—Check for loose wires or poor connections at the heater control panel 30P connector and at the air mix control motor 7P connector. If the connections are good, substitute a known-good heater control panel, and recheck. If the symptom/indication goes away, replace the original heater control panel.■

**NO**—Repair any open in the wire(s) between the heater control panel and the air mix control motor.■

7. Remove the air mix control motor (see page 21-33).

8. Check the air mix control linkage and doors for smooth movement.

*Do the air mix control linkage and doors move smoothly?*

**YES**—Replace the air mix control motor.■

**NO** Repair the air mix control linkage or doors.■

## DTC 2: A problem in the mode control motor circuit

1. Disconnect the mode control motor 7P connector.

2. Test the mode control motor (see page 21-34).

*Is the mode control motor OK?*

**YES**—Go to step 3.

**NO**—Go to step 7.

3. Disconnect the heater control panel 30P connector.

4. Check for continuity between body ground and the heater control panel 30P connector terminals No. 3, 4, 8, 9, 10, 21, and 22 individually.

**HEATER CONTROL PANEL 30P CONNECTOR**

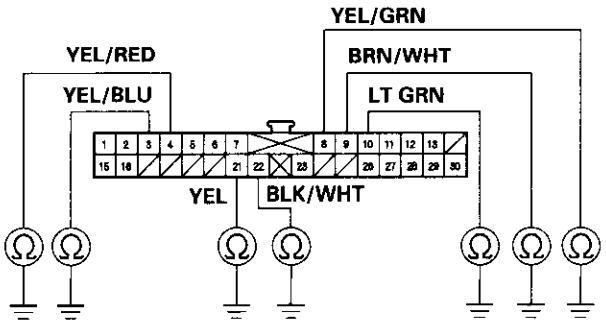


Wire side of female terminals

*Is there continuity?*

**YES**—Repair any short to body ground in the wire(s) between the heater control panel and the mode control motor.■

**NO**—Go to step 5.

(cont'd)

## DTC Troubleshooting (cont'd)

5. Turn the ignition switch ON (II), and check the same terminals for voltage.

HEATER CONTROL PANEL 30P CONNECTOR

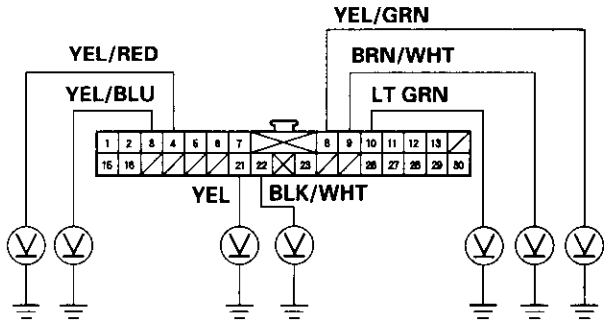


Wire side of female terminals

*Is there any voltage?*

**YES** – Repair any short to power in the wire(s) between the heater control panel and the mode control motor. This short may also damage the heater control panel. Repair the short to power before replacing the heater control panel. ■

**NO** – Go to step 6.

6. Turn the ignition switch OFF, and check for continuity between the following terminals of the heater control panel 30P connector and the air mix control motor 7P connector.

| 30P: | 7P: |
|---|---|
| No. 3 | No. 2 |
| No. 4 | No. 1 |
| No. 8 | No. 5 |
| No. 9 | No. 6 |
| No. 10 | No. 7 |
| No. 21 | No. 3 |
| No. 22 | No. 4 |

HEATER CONTROL PANEL 30P CONNECTOR
Wire side of female terminals

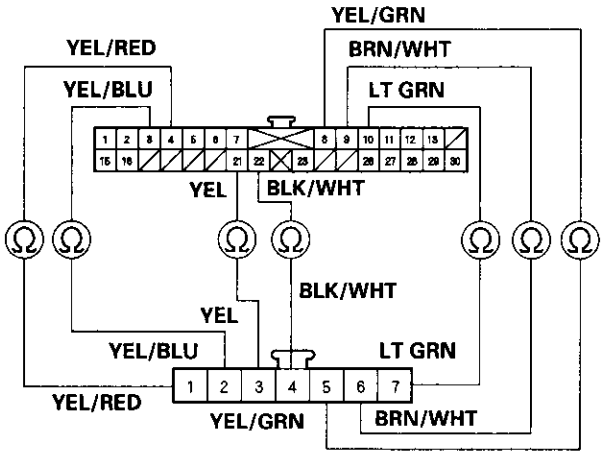


MODE CONTROL MOTOR 7P CONNECTOR
Wire side of female terminals

*Is there continuity?*

**YES** – Check for loose wires or poor connections at the heater control panel 30P connector and at the mode control motor 7P connector. If the connections are good, substitute a known-good heater control panel, and recheck. If the symptom/indication goes away, replace the original heater control panel. ■

**NO** – Repair any open in the wire(s) between the heater control panel and mode control motor. ■

7. Remove the mode control motor (see page 21-34).

8. Check the mode control linkage and doors for smooth movement.

   *Do the mode control linkage and doors move smoothly?*

   **YES** – Replace the mode control motor. ■

   **NO** – Repair the mode control linkage or doors. ■

## DTC 3: A problem in the blower motor circuit

1. Check the No. 56 (40A) fuse in the main under-hood fuse/relay box, and the No. 20 (7.5A) fuse in the under-dash fuse/relay box.

   *Are the fuses OK?*

   **YES** – Go to step 2.

   **NO** – Replace the fuse(s), and recheck. ■

2. Connect the No. 2 terminal of the blower motor 2P connector to body ground with a jumper wire.

**BLOWER MOTOR 2P CONNECTOR**

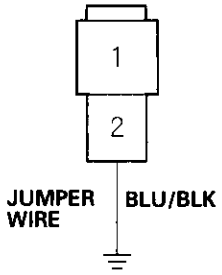


Wire side of female terminals

3. Turn the ignition switch ON (II).

   *Does the blower motor run?*

   **YES** – Go to step 4.

   **NO** – Go to step 17.

4. Turn the ignition switch OFF.

5. Disconnect the jumper wire.

6. Disconnect the power transistor 5P connector.

(cont'd)

## DTC Troubleshooting (cont'd)

7. Check for continuity between the No. 5 terminal of the power transistor 5P connector and body ground.

**POWER TRANSISTOR 5P CONNECTOR**

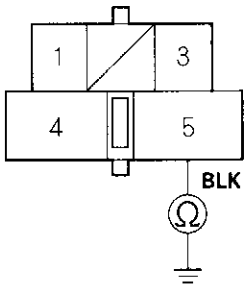


Wire side of female terminals

*Is there continuity?*

**YES** – Go to step 8.

**NO** - Check for an open in the wire between the power transistor and body ground. If the wire is OK, check for poor ground at G402.■

8. Connect the No. 4 and No. 5 termials of the power transistor 5P connector with a jumper wire.

**POWER TRANSISTOR 5P CONNECTOR**

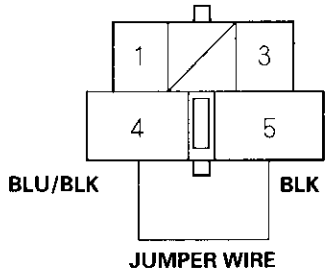


Wire side of female terminals

9. Turn the ignition switch ON (II).

*Does the blower motor run at high speed?*

**YES** Go to step 10.

**NO** - Repair open in the wire between the power transistor and blower motor.■

10. Turn the ignition switch OFF.

11. Disconnect the jumper wire.

12. Disconnect the heater control panel 30P connector.

13. Check for continuity between the No. 11 and No. 13 terminals of the heater control panel 30P connector and body ground individually.

**HEATER CONTROL PANEL 30P CONNECTOR**

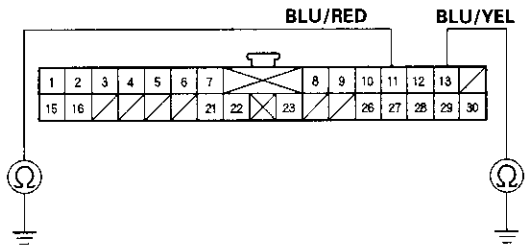


Wire side of female terminals

*Is there continuity?*

**YES** – Repair any short to body ground in the wire(s) between the heater control panel and the power transistor.■

**NO** – Go to step 14.

14. Check for continuity between the following terminals of the heater control panel 30P connector and the power transistor 5P connector.

| 30P: | 5P: |
|---|---|
| No. 11 | No. 1 |
| No. 13 | No. 3 |

**HEATER CONTROL PANEL 30P CONNECTOR**
Wire side of female terminals

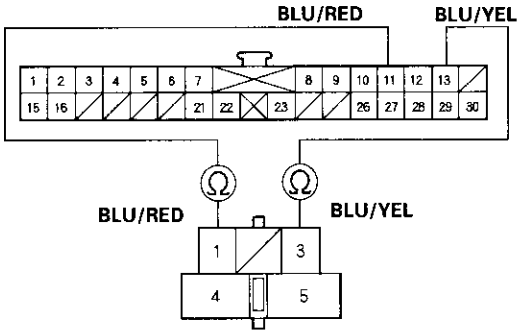


**POWER TRANSISTOR 5P CONNECTOR**
Wire side of female terminals

*Is there continuity?*

**YES** – Go to step 15.

**NO** – Repair any open in the wire(s) between the heater control panel and the power transistor.■

15. Reconnect the heater control panel 30P connector.

16. Test the power transistor (see page 21-36).

    *Is the power transistor OK?*

    **YES** – Check for loose wires or poor connections at the heater control panel 30P connector, blower motor 2P connector and at the power transistor 5P connector. If the connections are good, substitute a known-good heater control panel, and recheck. If the symptom/indication goes away, replace the original heater control panel. ■

    **NO** – Replace the power transistor. ■

17. Disconnect the jumper wire.

18. Disconnect the blower motor 2P connector.

19. Measure the voltage between the No. 1 terminal of the blower motor 2P connector and body ground.

**BLOWER MOTOR 2P CONNECTOR**

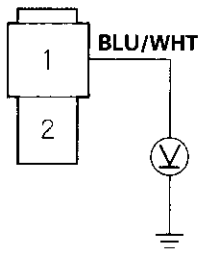


Wire side of female terminals

*Is there battery voltage?*

**YES** – Replace the blower motor. ■

**NO** - Go to step 20.

20. Turn the ignition switch OFF.

21. Remove the blower motor relay from the main under-hood fuse/relay box, and test it (see page 22-40).

    *Is the relay OK?*

    **YES** Go to step 22.

    **NO** – Replace the blower motor relay. ■

22. Measure the voltage between the No. 4 terminal of the blower motor relay 4P socket and body ground.

**BLOWER MOTOR RELAY 4P SOCKET**

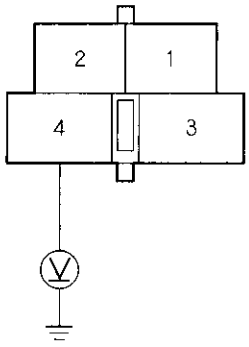


*Is there battery voltage?*

**YES** – Go to step 23.

**NO** - Replace the main under-hood fuse/relay box. ■

23. Turn the ignition switch ON (II).

24. Measure the voltage between the No.1 terminal of the blower motor relay 4P socket and body ground.

**BLOWER MOTOR RELAY 4P SOCKET**

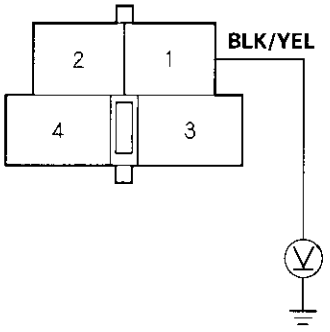


*Is there battery voltage?*

**YES** – Go to step 25.

**NO** – Repair open in the wire between the No. 20 fuse in the under-dash fuse/relay box and the blower motor relay. ■

(cont'd)

## DTC Troubleshooting (cont'd)

25. Turn the ignition switch OFF.

26. Check for continuity between the No. 2 terminal of the blower motor relay 4P socket and body ground.

**BLOWER MOTOR RELAY 4P SOCKET**

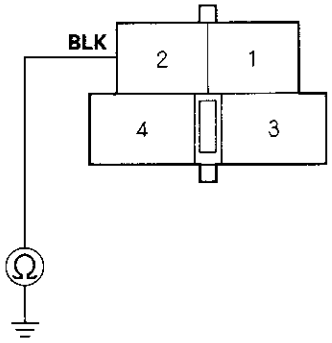


*Is there continuty?*

**YES** – Repair open in the BLU/WHT wire between the blower motor relay and the blower motor. ■

**NO** – Check for an open in the wire between the blower motor relay and body ground. If the wire is OK, check for poor ground at G201. ■

**DTC 4:** A problem in the evaporator temperature sensor circuit

1. Disconnect the evaporator temperature sensor 2P connector.

2. Measure the resistance between the No. 1 and No. 2 terminals of the evaporator temperature sensor.

**EVAPORATOR TEMPERATURE SENSOR**

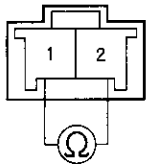


Wire side of female terminals

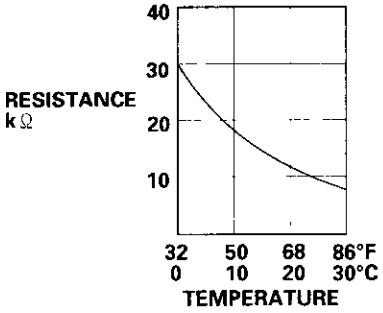


*Is the resistance within the specifications shown on the graph?*

**YES** – Go to step 3.

**NO** – Replace the evaporator temperature sensor. ■

3. Disconnect the heater control panel 30P connector.

4. Check for continuity between the No. 7 terminal of the heater control panel 30P connector and body ground.

**HEATER CONTROL PANEL 30P CONNECTOR**

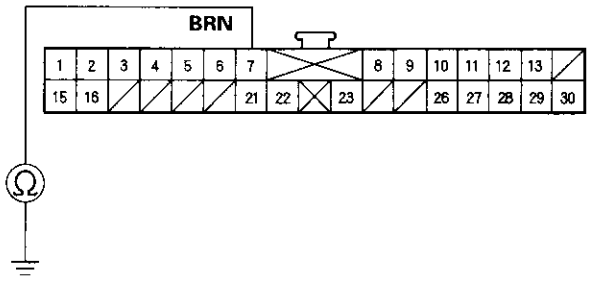


Wire side of female terminals

*Is there continuity?*

**YES** – Repair short to body ground in the wire between the heater control panel and the evaporator temperature sensor. ■

**NO** – Go to step 5.

5. Check for continuity between the No. 7 terminal of the heater control panel 30P connector and the No. 2 terminal of the evaporator temperature sensor 2P connector.

**HEATER CONTROL PANEL 30P CONNECTOR**
Wire side of female terminals

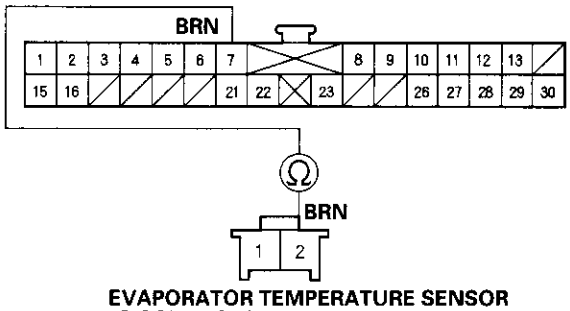


**EVAPORATOR TEMPERATURE SENSOR 2P CONNECTOR**
Wire side of female terminals

*Is there continuity?*

**YES** – Go to step 6.

**NO** – Repair open in the wire between the heater control panel and the evaporator temperature sensor. ■

6. Check for continuity between the No. 10 terminal of the heater control panel 30P connector and the No. 1 terminal of the evaporator temperature sensor 2P connector.

**HEATER CONTROL PANEL 30P CONNECTOR**
Wire side of female terminals

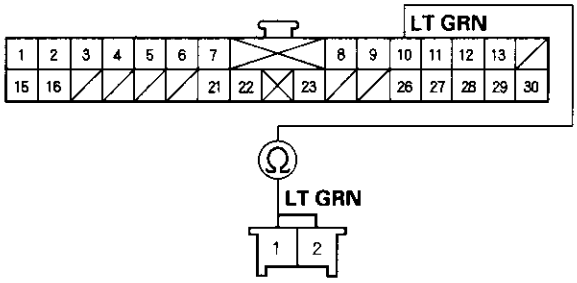


**EVAPORATOR TEMPERATURE SENSOR 2P CONNECTOR**
Wire side of female terminals

*Is there continuity?*

**YES** – Check for loose wires or poor connections at the heater control panel 30P connector and at the evaporator temperature sensor 2P connector. If the connections are good, substitute a known-good heater control panel, and recheck. If the symptom/indication goes away, replace the original heater control panel. ■

**NO** – Repair open in the wire between the heater control panel and the evaporator temperature sensor. ■

## Recirculation Control Motor Circuit Troubleshooting

1. Check the No. 20 (7.5 A) fuse in the under-dash fuse/relay box.

   *Is the fuse OK?*

   **YES** – Go to step 2.

   **NO** – Replace the fuse, and recheck. ■

2. Disconnect the recirculation control motor 7P connector.

3. Turn the ignition switch ON (II).

4. Measure the voltage between the No. 1 terminal of the recirculation control motor 7P connector and body ground.

   **RECIRCULATION CONTROL MOTOR 7P CONNECTOR**

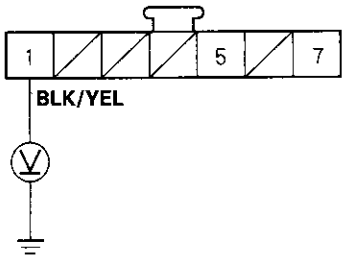


   Wire side of female terminals

   *Is there battery voltage?*

   **YES** – Go to step 5.

   **NO** – Repair open in the wire between the No.20 fuse in the under-dash fuse/relay box and the recirculation control motor. ■

5. Turn the ignition switch OFF.

6. Test the recirculation control motor (see page 21-35).

   *Is the recirculation control motor OK?*

   **YES** – Go to step 7.

   **NO** – Go to step 11.

7. Disconnect the heater control panel 30P connector.

8. Check for continuity between the No. 15 and No. 16 terminals of the heater control panel 30P connector and body ground individually.

   **HEATER CONTROL PANEL 30P CONNECTOR**

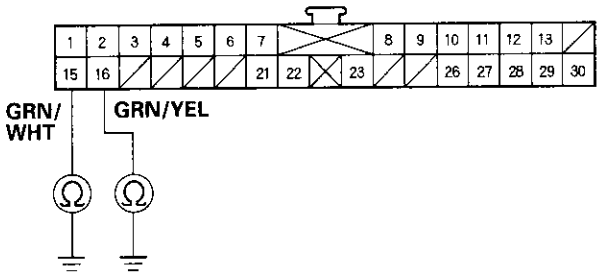


   Wire side of female terminals

   *Is there continuity?*

   **YES** – Repair any short to body ground in the wire(s) between the heater control panel and the recirculation control motor. ■

   **NO** – Go to step 9.

9. Turn the ignition switch ON (II), and check the same terminals for voltage.

   **HEATER CONTROL PANEL 30P CONNECTOR**

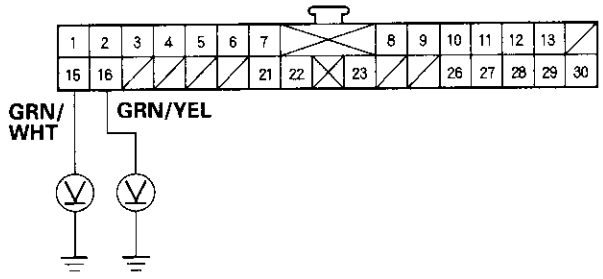


   Wire side of female terminals

   *Is there any voltage?*

   **YES** – Repair any short to power in the wire(s) between the heater control panel and the recirculation control motor. This short may also damage the heater control panel. Repair the short to power before replacing the heater control panel. ■

   **NO** – Go to step 10.

10. Turn the ignition switch OFF, and check for continuity between the following terminals of the heater control panel 30P connector and the recirculation control motor 7P connector.
    30P: 7P:
    No. 15 No. 5
    No. 16 No. 7

**HEATER CONTROL PANEL 30P CONNECTOR**
Wire side of female terminals

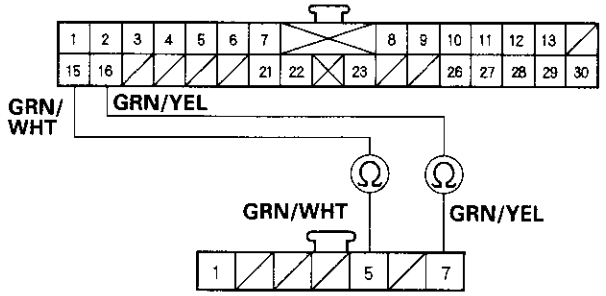


**RECIRCULATION CONTROL MOTOR 7P CONNECTOR**
Wire side of female terminals

*Is there continuity?*

**YES** – Check for loose wires or poor connections at the heater control panel 30P connector and at the recirculation control motor 7P connector. If the connections are good, substitute a known-good heater control panel, and recheck. If the symptom/indication goes away, replace the original heater control panel. ■

**NO** – Repair any open in the wire(s) between the heater control panel and the recirculation control motor. ■

11. Remove the recirculation control motor (see page 21-35).

12. Check the recirculation control linkage and doors for smooth movement.

*Do the recirculation control linkage and doors move smoothly?*

**YES** – Replace the recirculation control motor. ■

**NO** – Repair the recirculation control linkage or doors. ■

## Heater Control Power and Ground Circuits Troubleshooting

1. Check the No. 54 (30 A) fuse in the main under-hood fuse/relay box, and the No. 20 (7.5 A) and No. 25 (7.5 A) fuses in the under-dash fuse/relay box.

*Are the fuses OK?*

**YES** – Go to step 2.

**NO** – Replace the fuse(s), and recheck. ■

2. Disconnect the heater control panel 30P connector.

3. Turn the ignition switch ON (II).

4. Measure the voltage between the No. 30 terminal of the heater control panel 30P connector and body ground.

**HEATER CONTROL PANEL 30P CONNECTOR**

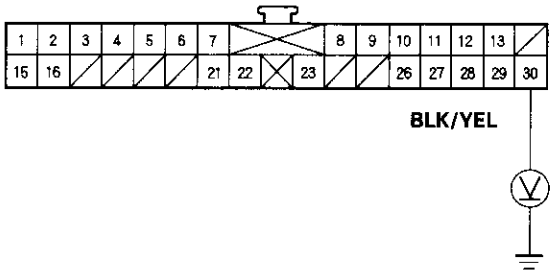


Wire side of female terminals

*Is there battery voltage?*

**YES** – Go to step 5.

**NO** – Repair open in the wire between the No. 20 fuse in the under-dash fuse/relay box and the heater control panel. ■

5. Turn the ignition switch OFF.

(cont'd)

## Heater Control Power and Ground Circuits Troubleshooting (cont'd)

6. Measure the voltage between the No. 29 terminal of the heater control panel 30P connector and body ground.

**HEATER CONTROL PANEL 30P CONNECTOR**

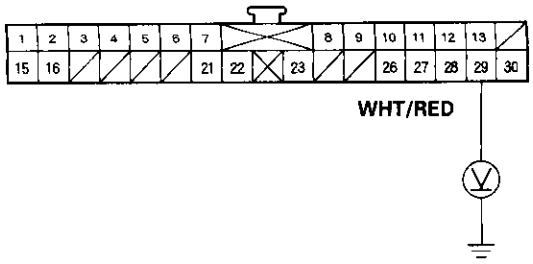


Wire side of female terminals

*Is there battery voltage?*

**YES** – Go to step 7.

**NO** – Repair open in the wire between the No. 25 fuse in the under-dash fuse/relay box and the heater control panel. ■

7. Check for continuity between the No.26 terminal of the heater control panel 30P connector and body ground.

**HEATER CONTROL PANEL 30P CONNECTOR**

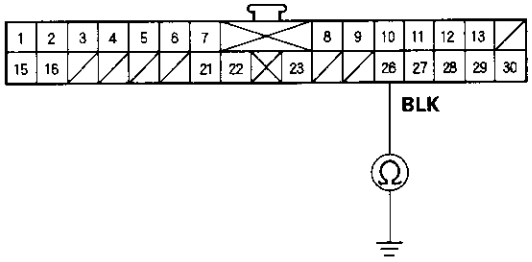


Wire side of female terminals

*Is there continuity?*

**YES** – Go to step 8.

**NO** – Check for an open in the wire between the heater control panel and body ground. If the wire is OK, check for poor ground at G402. ■

8. Disconnect the air mix control motor 7P connector.

9. Check for continuity between the No.5 terminal of the heater control panel 30P connector and body ground.

**HEATER CONTROL PANEL 30P CONNECTOR**

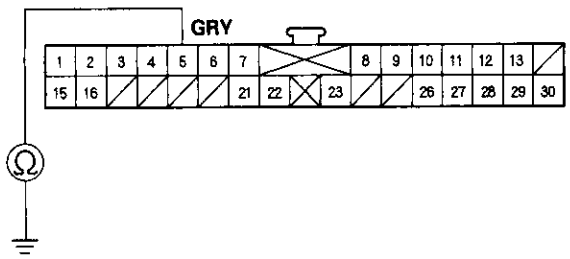


Wire side of female terminals

*Is there continuity?*

**YES** – Repair short to body ground in the wire between the heater control panel and the air mix control motor. ■

**NO** – Check for loose wires or poor connections at the heater control panel 30P connector. If the connections are good, substitute a known-good heater control panel, and recheck. If the symptom indication goes away, replace the original heater control panel. ■

## Condenser Fan Circuit Troubleshooting

1. Check the No. 58 (20 A) fuse in the main under-hood fuse/relay box, and the No. 20 (7.5 A) fuse in the under-dash fuse/relay box.

   *Are the fuses OK?*

   **YES** – Go to step 2.

   **NO** – Replace the fuse(s), and recheck.■

2. Remove the condenser fan relay from the main under-hood fuse/relay box, and test it (see page 22-40).

   *Is the relay OK?*

   **YES** - Go to step 3.

   **NO** – Replace the condenser fan relay.■

3. Measure the voltage between the No. 1 terminal of the condenser fan relay 4P socket and body ground.

   **CONDENSER FAN RELAY 4P SOCKET**

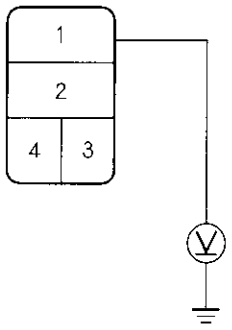


   *Is there battery voltage?*

   **YES** – Go to step 4.

   **NO** – Replace the main under-hood fuse/relay box.■

4. Connect the No. 1 and No. 2 terminals of the condenser fan relay 4P socket with a jumper wire.

   **CONDENSER FAN RELAY 4P SOCKET**

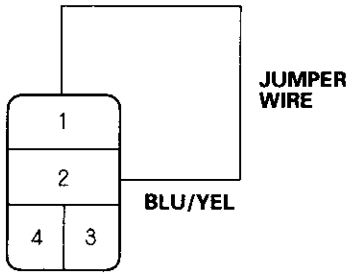


   *Does the condenser fan run?*

   **YES** – Go to step 5.

   **NO** – Go to step 8.

5. Disconnect the jumper wire.

6. Turn the ignition switch ON (II).

7. Measure the voltage between the No. 3 terminal of the condenser fan relay 4P socket and body ground.

   **CONDENSER FAN RELAY 4P SOCKET**

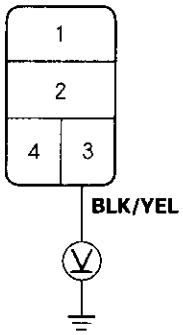


   *Is there battery voltage?*

   **YES** – Replace the main under-hood fuse/relay box.■

   **NO** – Repair open in the wire between the No. 20 fuse in the under-dash fuse/relay box and the condenser fan relay.■

8. Disconnect the jumper wire.

(cont'd)

## Condenser Fan Circuit Troubleshooting (cont'd)

9. Disconnect the condenser fan 2P connector.

10. Check for continuity between the No. 2 terminal of the condenser fan relay 4P socket and the No. 2 terminal of the condenser fan 2P connector.

**CONDENSER FAN RELAY 4P SOCKET**

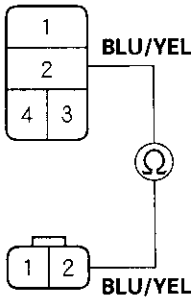


**CONDENSER FAN 2P CONNECTOR**
Wire side of female terminals

*Is there continuity?*

**YES** – Go to step 11.

**NO** – Repair open in the wire between the condenser fan relay and the condenser fan. ■

11. Check for continuity between the No. 1 terminal of the condenser fan 2P connector and body ground.

**CONDENSER FAN 2P CONNECTOR**

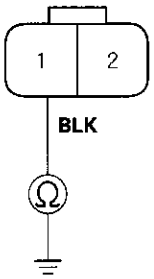


Wire side of female terminals

*Is there continuity?*

**YES** – Replace the condenser fan motor. ■

**NO** – Check for an open in the wire between the condenser fan and body ground. If the wire is OK, check for poor ground at G201. ■

## Radiator and Condenser Fans Common Circuit Troubleshooting

1. Check the No. 57 (20A) and No. 58 (20A) fuses in the main under-hood fuse/relay box, and the No. 20 (7.5A) fuse in the under-dash fuse/relay box.

*Are the fuses OK?*

**YES** – Go to step 2.

**NO** – Replace the fuse(s), and recheck. ■

2. Remove the condenser fan relay from the main under-hood fuse/relay box.

3. Turn the ignition switch ON (II).

4. Measure the voltage between the No. 3 terminal of the condenser fan relay 4P socket and body ground.

**CONDENSER FAN RELAY 4P SOCKET**

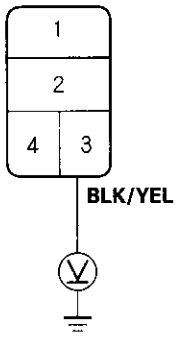


*Is there battery voltage?*

**YES** – Go to step 5.

**NO** – Repair open in the wire between the No. 20 fuse in the under-dash fuse/relay box and the radiator fan relay, and the condenser fan relay. ■

5. Turn the ignition switch OFF.

6. Reinstall the condenser fan relay.

7. Make sure the A/C switch is OFF.

8. Turn the ignition switch ON (II).

9. Using a backprobe set, measure the voltage between the No. 20 terminal of ECM connector A (32P) and body ground with the ECM connectors connected.

**ECM CONNECTOR A (32P)**

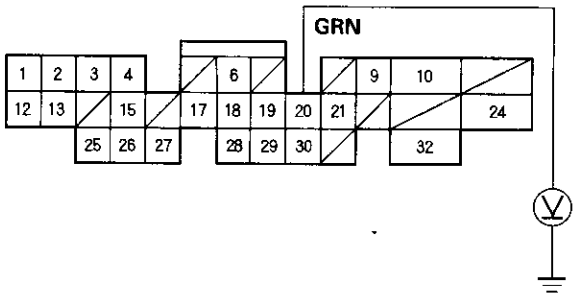


Wire side of female terminals

*Is there battery voltage?*

**YES** – Check for loose wires or poor connections at ECM connector A(32P). If the connections are good, substitute a known-good ECM, and recheck. If the symptom/indication goes away, replace the original ECM. ■

**NO** – Repair open in the wire between the radiator fan relay, the condenser fan relay and the ECM. ■

## Compressor Clutch Circuit Troubleshooting

1. Check the No. 58 (20A) fuse in the main under-hood fuse/relay box, and the No. 20 (7.5A) fuse in the under-dash fuse/relay box.

   *Are the fuses OK?*

   **YES** – Go to step 2.

   **NO** – Replace the fuse(s), and recheck. ■

2. Check the engine coolant temperature, the throttle position sensor, and the idle speed (use the Honda PGM Tester PGM-FI data list if possible).

   *Is the coolant temperature above normal, the throttle position sensor reading too high, or the idle speed to low?*

   **YES** – Troubleshoot and repair the cause of the high engine coolant temperature, high throttle position sensor reading, or low idle speed. ■

   **NO** – Go to step 3.

3. Remove the compressor clutch relay from the main under-hood fuse/relay box, and test it (see page 22-40).

   *Is the relay OK?*

   **YES** – Go to step 4.

   **NO** – Replace the compressor clutch relay. ■

4. Measure the voltage between the No.1 terminal of the compressor clutch relay 4P socket and body ground.

**COMPRESSOR CLUTCH RELAY 4P SOCKET**

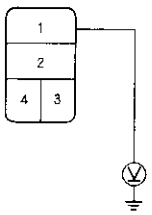


*Is there battery voltage?*

**YES** – Go to step 5.

**NO** – Replace the main under-hood fuse/relay box. ■

(cont'd)

## Compressor Clutch Circuit Troubleshooting (cont'd)

5. Connect the No. 1 and No. 2 terminals of the compressor clutch relay 4P socket with a jumper wire.

**COMPRESSOR CLUTCH RELAY 4P SOCKET**

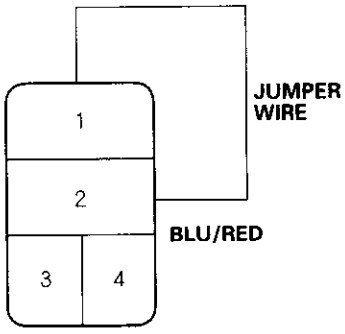


*Does the compressor clutch click ?*

**YES** – Go to step 6.

**NO** – Go to step 14.

6. Disconnect the jumper wire.
7. Turn the ignition switch ON (II).
8. Measure the voltage between the No. 4 terminal of the compressor clutch relay 4P socket and body ground.

**COMPRESSOR CLUTCH RELAY 4P SOCKET**

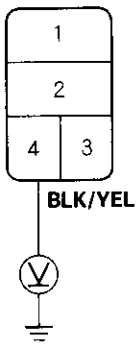


*Is there battery voltage?*

**YES** – Go to step 9.

**NO** – Repair open in the wire between the No. 20 fuse in the under-dash fuse/relay box and the compressor clutch relay. ■

9. Turn the ignition switch OFF.
10. Reinstall the compressor clutch relay.
11. Make sure the A/C switch is OFF.
12. Turn the ignition switch ON (II).
13. Using a backprobe set, measure the voltage between the No. 17 terminal of ECM connector A (32P) and body ground with the ECM connectors connected.

**ECM CONNECTOR A (32P)**

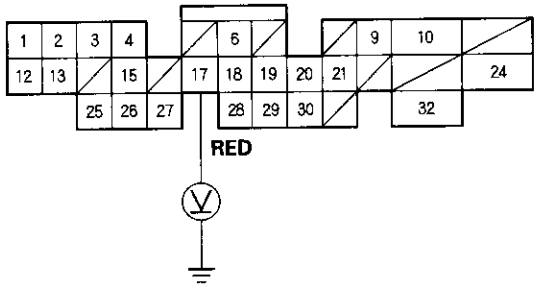


Wire side of female terminals

*Is there battery voltage?*

**YES** – Check for loose wires or poor connections at ECM connector A (32P). If the connections are good, substitute a known-good ECM, and recheck. If the symptom/indication goes away, replace the original ECM. ■

**NO** – Repair open in the wire between the compressor clutch relay and the ECM. ■

14. Disconnect the jumper wire.
15. Disconnect the compressor clutch 1P connector.

16. Check for continuity between the No. 2 terminal of the compressor clutch relay 4P socket and the No. 1 terminal of the compressor clutch 1P connector.

**COMPRESSOR CLUTCH RELAY 4P SOCKET**

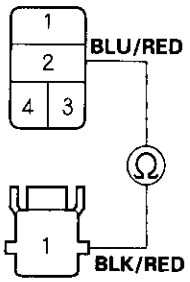


**COMPRESSOR CLUTCH 1P CONNECTOR**
Wire side of female terminals

*Is there continuity?*

**YES** – Check the compressor clutch clearance, the thermal protector, and the compressor clutch field *coil (see page 21-46).*■

**NO** – Repair open in the wire between the compressor clutch relay and the compressor clutch.■

## A/C Pressure Switch Circuit Troubleshooting

1. Disconnect the A/C pressure switch 2P connector.
2. Turn the ignition switch ON (II).
3. Measure the voltage between the No. 2 terminal of the A/C pressure switch 2P connector and body ground.

**A/C PRESSURE SWITCH 2P CONNECTOR**

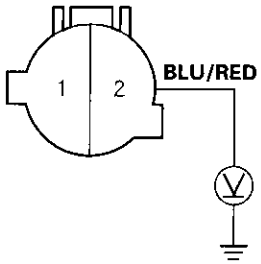


*Wire side of female terminals*

*Is there about 5 volts?*

**YES** – Go to step 4.

**NO** – Go to step 10.

4. Turn the ignition switch OFF.
5. Check for continuity between the No. 1 and No. 2 terminals of the A/C pressure switch.

**A/C PRESSURE SWITCH**

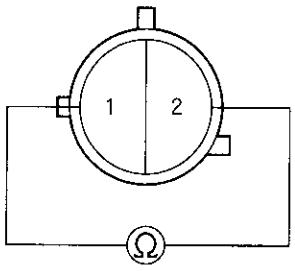


*Is there continuity?*

**YES** – Go to step 6.

**NO** – Go to step 12.

(cont'd)

## A/C Pressure Switch Circuit Troubleshooting (cont'd)

6. Reconnect the A/C pressure switch 2P connector.
7. Disconnect the heater control panel 30P connector.
8. Turn the ignition switch ON (II).
9. Measure the voltage between the No. 12 terminal of the heater control panel 30P connector and body ground.

**HEATER CONTROL PANEL 30P CONNECTOR**

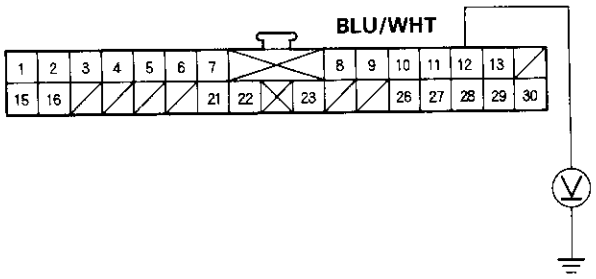


Wire side of female terminals

*Is there about 5 volts?*

**YES** – Check for loose wires or poor connections at the heater control panel 30P connector and at the A/C pressure switch 2P connector. If the connections are good, substitute a known-good heater control panel, and recheck. If the symptom/indication goes away, replace the original heater control panel. ■

**NO** – Repair open in the wire between the heater control panel and the A/C pressure switch. ■

10. Make sure the A/C switch is OFF.
11. Using a backprobe set, measure the voltage between the No. 27 terminal of ECM connector A (32P) and body ground with the ECM connectors connected.

**ECM CONNECTOR A (32P)**

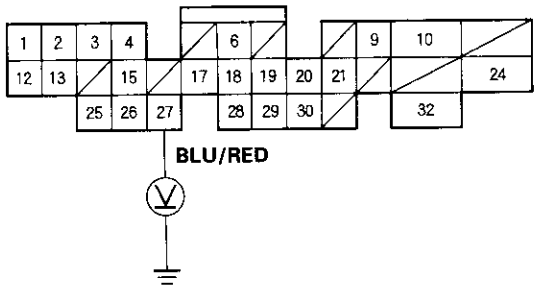


Wire side of female terminals

*Is there about 5 volts ?*

**YES** – Repair open in the wire between the ECM and the A/C pressure switch. ■

**NO** – Check for loose wires or poor connections at ECM connector A (32P). If the connections are good, substitute a known-good ECM, and recheck. If the symptom/indication goes away, replace the original ECM. ■

12. Check for proper A/C system pressure.

*Is the pressure within specifications?*

**YES** – Replace the A/C pressure switch. ■

**NO** – Repair the A/C pressure problem. ■

## Air Mix Control Motor Test

1. Disconnect the 7P connector from the air mix control motor.

2. Connect battery power to the No. 1 terminal of the air mix control motor, and ground the No. 2 terminal; the air mix control motor should run, and stop at Max Hot. If it doesn't, reverse the connections; the air mix control motor should run, and stop at Max Cool. If the air mix control motor does not run, remove it, then check the air mix control linkage and doors for smooth movement.

   - If the linkage and doors move smoothly, replace the air mix control motor.
   - If the linkage or doors stick or bind, repair them as needed.
   - If the air mix control motor runs smoothly, go to step 3.

**AIR MIX CONTROL MOTOR**

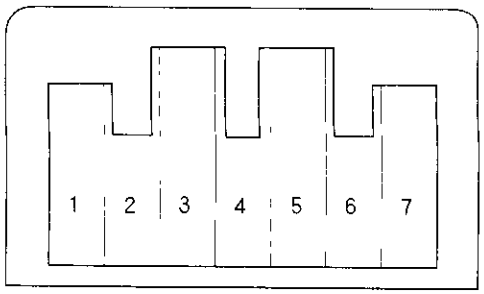


3. Measure the resistance between the No. 5 and No. 7 terminals. It should be between 4.2 k to 7.8 kΩ.

4. Reconnect the air mix control motor 7P connector, then turn the ignition switch ON (II).

5. Using the backprobe set, measure the voltage between the No.3 and No.7 terminals.

   **Max Cool – about 1 V**
   **Max Hot – about 4 V**

6. If either the resistance or voltage reading are not as specified, replace the air mix control motor.

## Air Mix Control Motor Replacement

1. Remove the audio unit (see page 22-89).

2. Remove the passenger's dashboard lower cover (see page 20-81).

3. Disconnect the 7P connector (A) from the air mix control motor (B). Remove the self-tapping screws and the air mix control motor from the heater unit.

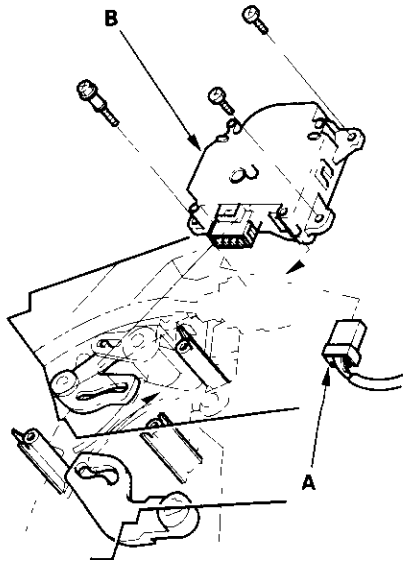


4. Install the motor in the reverse order of removal. Make sure the pin on the motor is properly engaged with the linkage. After installation, make sure the motor runs smoothly.

## Mode Control Motor Test

1. Disconnect the 7P connector from the mode control motor.
2. Connect battery power to the No. 1 terminal of the mode control motor, and ground the No. 2 terminal; the mode control motor should run smoothly, and stop at Vent. If it doesn't, reverse the connections; the mode control motor should run smoothly, and stop at Defrost. When the mode control motor stops running, disconnect battery power immediately.

**MODE CONTROL MOTOR**

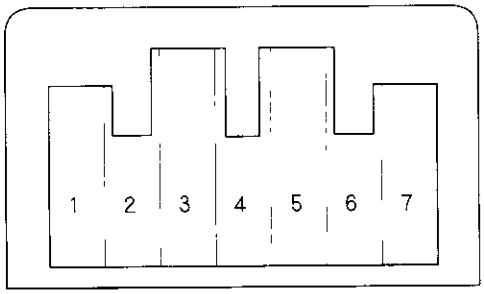


3. If the mode control motor does not run in step 2, remove it, then check the mode control linkage and doors for smooth movement.
   - If the linkage and doors move smoothly, replace the mode control motor.
   - If the linkage or doors stick or bind, repair them as needed.
   - If the mode control motor runs smoothly, go to step 4.
4. Use a digital multimeter with an output of 1 mA or less at the 20 kΩ range. With the mode control motor running as in step 2, check for continuity between the No. 7 terminal and the No. 3, 4, 5, and 6 terminals individually. There should be continuity for a moment at each terminal.
5. If there is no continuity for a moment at each terminal, replace the mode control motor.

## Mode Control Motor Replacement

1. Set the mode control dial on DEF with the ignition switch ON (II).
2. Remove the driver's heater outlet.
3. Disconnect the 7P connector (A) from the mode control motor (B). Remove the rods (C) from the mode control linkage (D). Remove the self-tapping screws and the mode control motor from the heater unit.

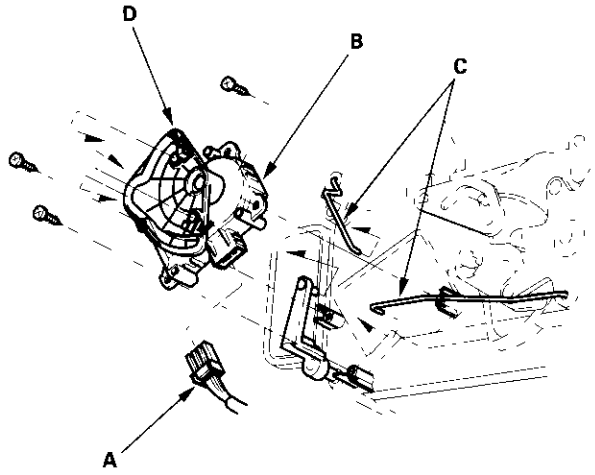


4. Install the motor in the reverse order of removal. Make sure the pin on the linkage is properly engaged with the motor. After installation, make sure the motor runs smoothly.

## Recirculation Control Motor Test

1. Disconnect the 7P connector from the recirculation control motor.

   **NOTICE**
   Incorrectly applying power and ground to the recirculation control motor will damage it. Follow the instructions carefully

2. Connect battery power to the No. 1 terminal of the recirculation control motor, and ground the No. 5 and No. 7 terminals; the recirculation control motor should run smoothly. To avoid damaging the recirculation control motor, do not reverse power and ground. Disconnect the No. 5 or No. 7 terminals from ground; the recirculation control motor should stop at Fresh or Recirculate. Don't cycle the recirculation control motor for a long time.

**RECIRCULATION CONTROL MOTOR**

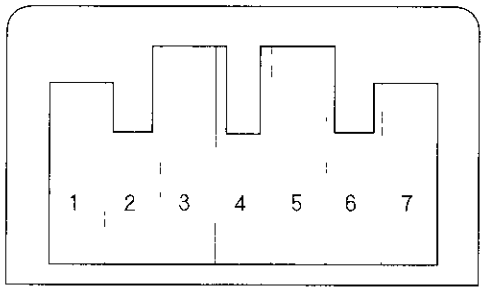


3. If the recirculation control motor does not run in step 2, remove it, then check the recirculation control linkage and doors for smooth movement.

   - If the linkage and doors move smoothly, replace the recirculation control motor.
   - If the linkage or doors stick or bind, repair them as needed.

## Recirculation Control Motor Replacement

1. Remove the passenger's dashboard lower cover (see page 20-81).
2. Remove the passenger's airbag (see page 23-67).
3. Remove the convertible top control unit (see page 22-144).
4. Disconnect the dashboard wire harness B connectors C201, C202, C203, and C451 (see page 22-18).
5. Disconnect the 7P connector (A) from the recirculation control motor (B). Remove the self-tapping screws and the recirculation control motor from the blower unit.

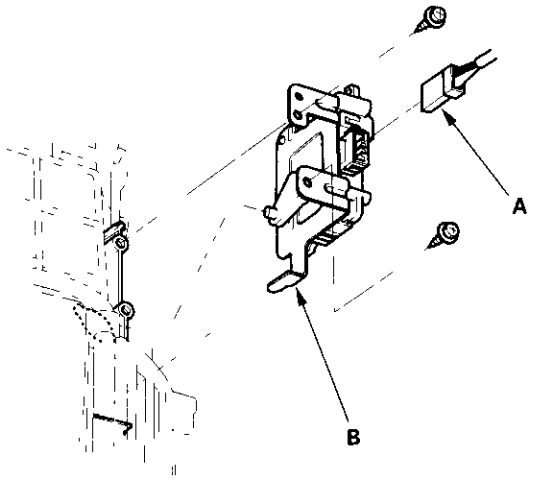


6. Install the motor in the reverse order of removal. Make sure the pin on the motor is properly engaged with the linkage. After installation, make sure the motor runs smoothly.

## Evaporator Temperature Sensor Test

1. Dip the sensor in ice water, and measure the resistance between its terminals.

**EVAPORATOR TEMPERATURE SENSOR**

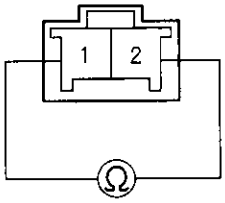


Terminal side of male terminals

2. Then pour hot water on the sensor, and check for a change in resistance.
3. Compare the resistance readings with the specifications shown in the graph; the resistance should be within the specifications.

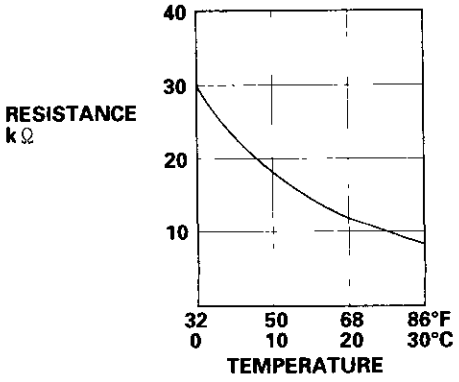


## Power Transistor Test

1. Disconnect the 5P connector from the power transistor.
2. Measure the resistance between the No. 1 and No. 4 terminals of the power transistor. It should be about 1.4 – 1.5 kΩ.
   - If the resistance is within the specifications, go to step 3.
   - If the resistance is not within the specifications, replace the power transistor.

**POWER TRANSISTOR**

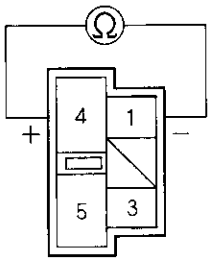


3. Carefully release the lock tab on the No. 3 terminal (BLU/YEL) (A) in the 5P connector, then remove the terminal and insulate it from body ground.

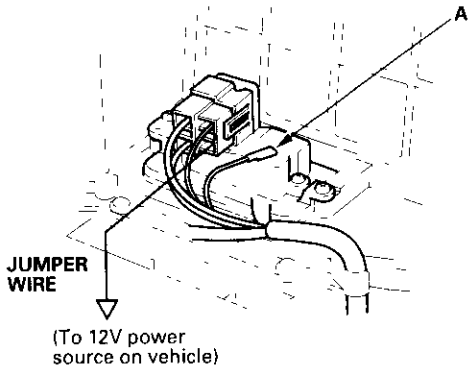


4. Reconnect the 5P connector to the power transistor.
5. Supply 12 volts to the No. 3 cavity with a jumper wire.
6. Turn the ignition switch ON (II), and check that the blower motor runs.
   - If the blower motor does not run, replace the power transistor.
   - If the blower motor runs, the power transistor is OK.

## Heater Control Panel Removal and Installation

1. Remove the instrument panel together with the heater control panel (see page 20-80).

2. Remove the self-tapping screws and the heater control panel (A) from the instrument panel (B).

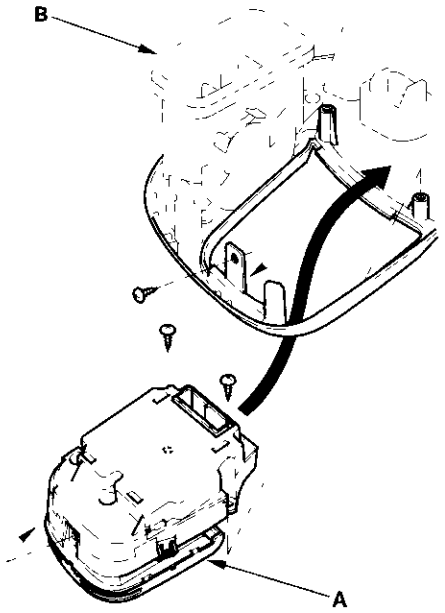


3. Install the control panel in the reverse order of removal. After installation, operate the control panel controls to see whether it works properly.

4. Run the self-diagnosis function to confirm that there are no problems in the system (see page 21-8).

## Blower/Evaporator Unit Removal and Installation

1. Recover the refrigerant with a recovery/recycling/charging station (see page 21-51).
2. Make sure you have the anti-theft code for the radio, then write down the frequencies for the radio's preset buttons.
3. Remove the battery.
4. Pull out the grommets, then carefully separate the upper grommet (A) from the lower grommet (B) by releasing the locktabs (C).

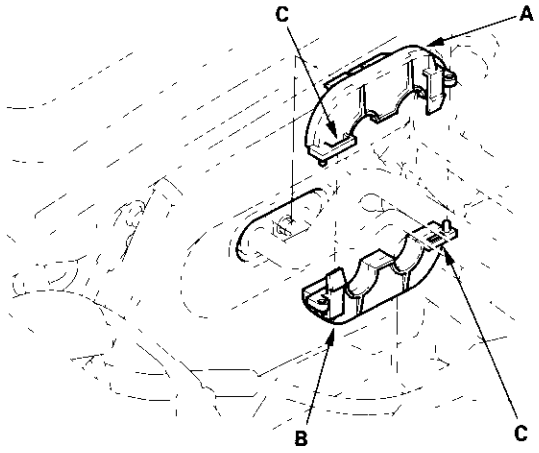


5. Remove the bolt, then disconnect the suction line (A) and the receiver line (B) from the blower/evaporator unit. Plug or cap the lines immediately after disconnecting them to avoid moisture and dust contamination.

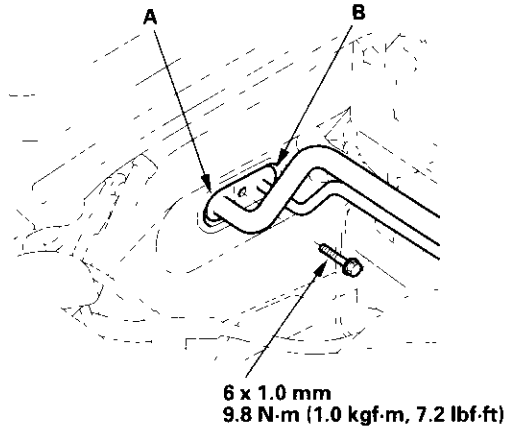


6. Remove the passenger's dashboard lower cover and the right kick panel (see page 20-81).
7. Disconnect the dashboard wire harness connector from the passenger's door wire harness connector, then remove it. Remove the wire harness connectors and the soft top control unit from the steering hanger beam.
8. Disconnect the connectors (A) from the blower motor, the power transistor, the evaporator sensor, and the recirculation control motor, then remove the wire harness clips (B). Remove the drain hose (C), the self-tapping screw, the mounting bolts, the mounting nuts, and the blower/evaporator unit (D).

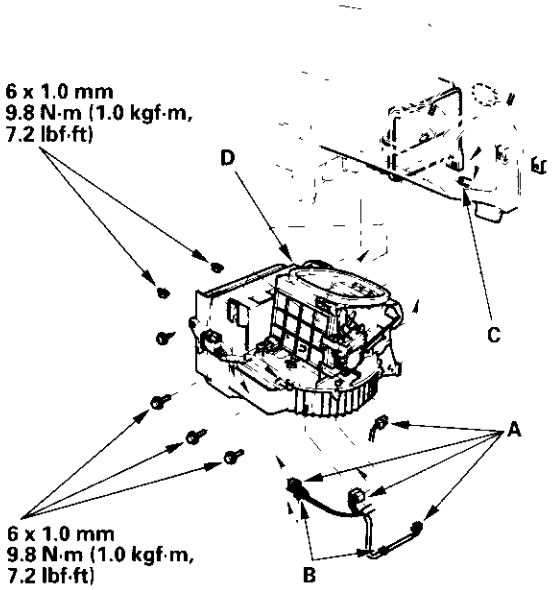


9. Install the unit in the reverse order of removal, and note these items:
   - If you're installing a new blower/evaporator unit, add refrigerant oil (KEIHIN SP-10) (see page 21-6).
   - Replace the O-rings with new ones at each fitting, and apply a thin coat of refrigerant oil before installing them. Be sure to use the correct O-rings for HFC-134a (R-134a) to avoid leakage.
   - Immediately after using the oil, reinstall the cap on the container, and seal it to avoid moisture absorption.
   - Do not spill the refrigerant oil on the vehicle; it may damage the paint. If the refrigerant oil contacts the paint, wash it off immediately.
   - Make sure that there is no air leakage.
   - Charge the system (see page 21-53).
   - Do the ECM idle learn procedure (see page 11-100).
   - Enter the anti-theft code for the radio, then enter the customer's radio station presets.
   - For '01-03 models, reset the clock.

## Blower/Evaporator Unit Components Replacement

Note these items when overhauling the blower/evaporator unit:

- The recirculation control motor (A), the power transistor (B), and the blower motor (C) can be replaced without removing the blower/evaporator unit.
- If you're installing a new evaporator core (D), add refrigerant oil (KEIHIN SP-10) (see page 21-6).
- If necessary, remove the expansion valve (E).
- Replace the O-rings with new ones at each fitting and apply a thin coat of refrigerant oil before installing them. Be sure to use the correct O-rings for HFC-134a (R-134a) to avoid leakage.
- Immediately after using the oil, reinstall the cap on the container, and seal it to avoid moisture absorption.
- Reinstall the evaporator temperature sensor (F) in its original location.
- Before reassembly, make sure that the recirculation control linkage and doors move smoothly.
- After reassembly, make sure the recirculation control motor runs smoothly (see page 21-35).
- Make sure no air is leaking from the upper housing (G) and the lower housing (H) fitting.

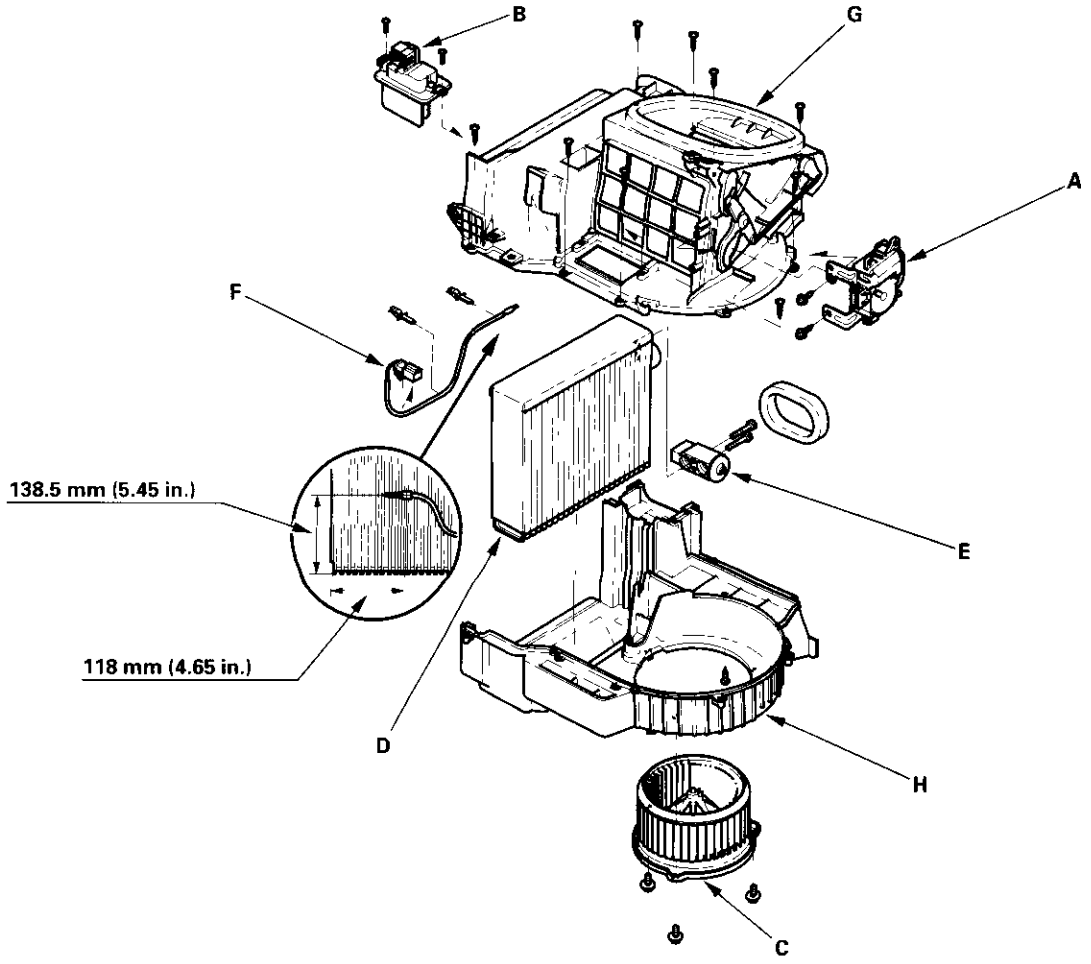

## Heater Unit/Core Replacement

SRS components are located in this area. Review the SRS component locations, precautions, and procedures in the SRS section before performing repairs or service (see page 23-10).

1. Make sure you have the anti-theft code for the radio, then write down the frequencies for the radio's preset buttons.
2. Disconnect the negative cable from the battery.
3. Remove the heat shield of the exhaust manifold (see step 16 on page 6-27).
4. From under the hood, open the cable clamp (A), then disconnect the heater valve cable (B) from the heater valve arm (C). Turn the heater valve arm to the fully opened position as shown.

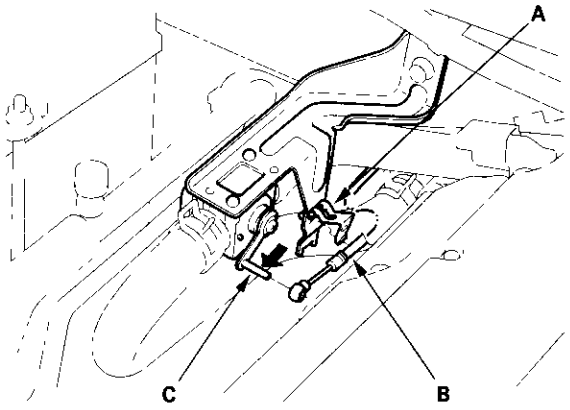


5. When the engine is cool, drain the engine coolant from the radiator (see page 10-8).
6. Remove the mounting bolt from the heater valve. Slide the hose clamps (A) back, then disconnect the inlet heater hose (B) and the outlet heater hose (C) from the heater unit. Engine coolant will run out when the hoses are disconnected; drain it into a clean drip pan. Be sure not to let coolant spill on the electrical parts or the painted surfaces. If any coolant spills, rinse it off immediately.

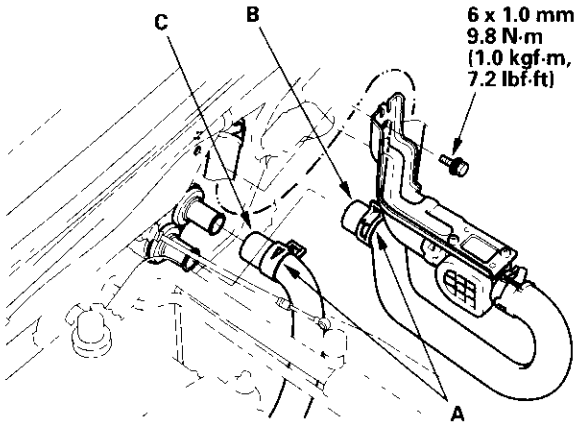


7. Remove the mounting nut from the heater unit. Take care not to damage or bend the fuel lines, the brake lines, etc.

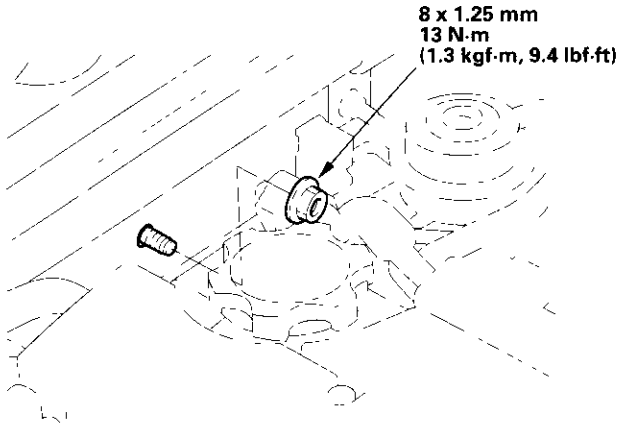

8. Remove the dashboard (see page 20-82).

9. Remove the blower/evaporator unit (see page 21-38).

10. Remove the mounting bolts, the center brackets (A), and the audio brackets (B).

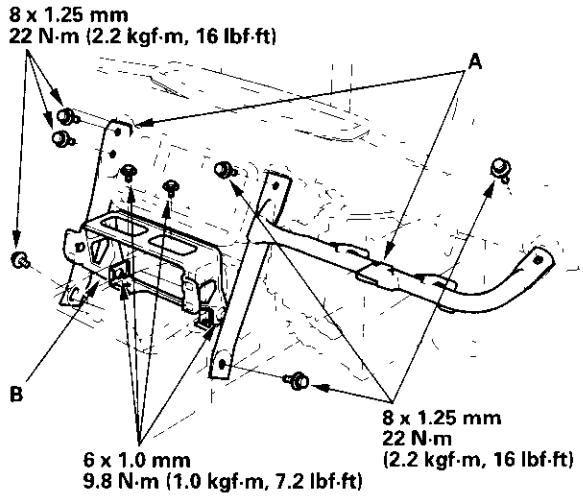


11. Remove the SRS unit (see page 23-75).

12. Remove the self-tapping screws and the defroster outlet (A), then remove the wire harness clips (B).

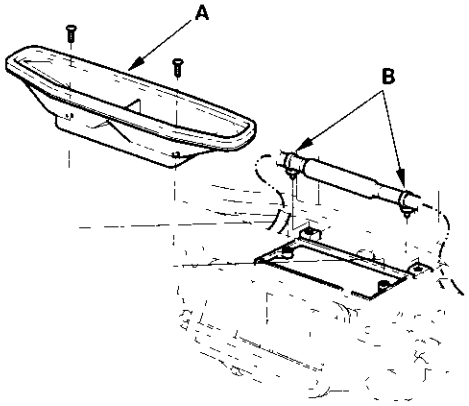


13. Disconnect the connectors (A) from the mode control motor and the air mix control motor, then remove the wire harness clip (B). Remove the mounting nuts, the mounting bolt, and the heater unit (C).

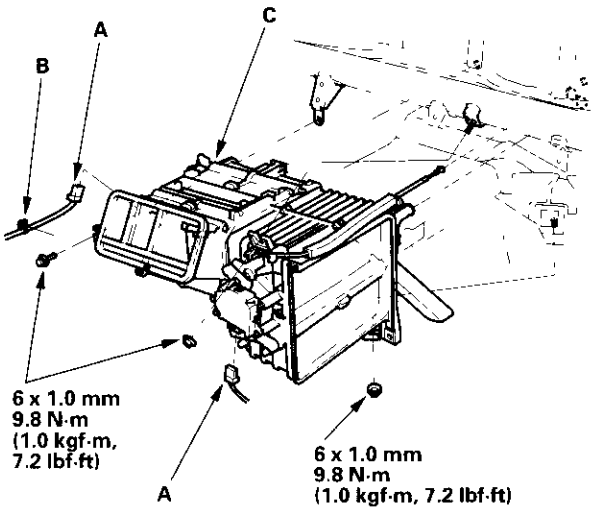


14. Remove the self-tapping screw and the passenger's heater outlet (A), then remove the self-tapping screw and the clamp (B). Be careful not to bend the inlet and outlet pipes during the heater core (C) removal, and pull out the heater core.

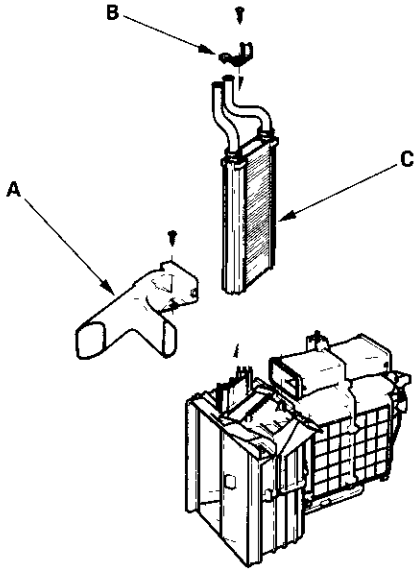


(cont'd)

## Heater Unit/Core Replacement (cont'd)

15. Install the heater core in the reverse order of removal.

16. Install the heater unit in the reverse order of removal, and note these items:

    - Do not interchange the inlet and outlet heater hoses, and install the hose clamps securely.
    - Refill the cooling system with engine coolant (see page 10-8).
    - Adjust the heater valve cable (see page 21-43).
    - Make sure that there is no coolant leakage.
    - Make sure that there is no air leakage.
    - For evaporator and A/C-related information, refer to blower /evaporator unit removal and installation (see page 21-38).
    - Do the ECM idle learn procedure (see page 11-100).
    - Enter the anti-theft code for the radio, then enter the customer's radio station presets.
    - For '01-03 models, reset the clock.

## Dust and Pollen Filter Replacement

The dust and pollen filter should be replaced every 30,000 miles under normal conditions, or every 15,000 miles under extremely dusty or sooty conditions. Replace the filter more often if the air flow is less than usual.

1. Open the hood.

2. Remove the clips (A) and the hood seal (B). Lift the right side of the cowl cover (C) up, and remove the dust and pollen filter (D) as shown. Be careful not to damage the hood seal when removing the clips.

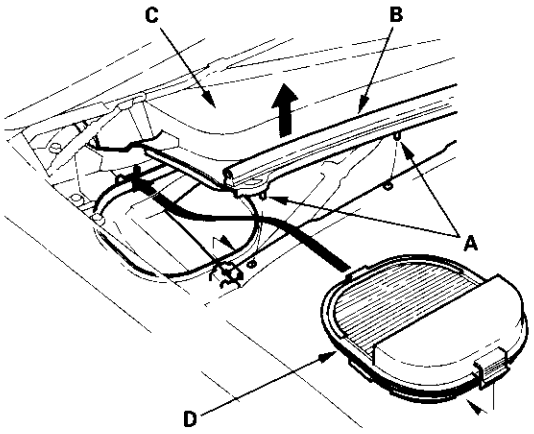


3. Remove the filter (A) from the housing (B). Replace the filter.

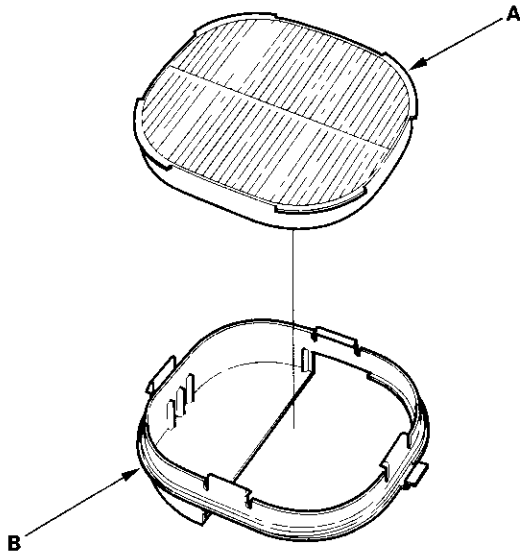


4. Install the filter in the reverse order of removal.

## Heater Valve Cable Adjustment

1. From under the hood, open the cable clamp (A), then disconnect the heater valve cable (B) from the heater valve arm (C).

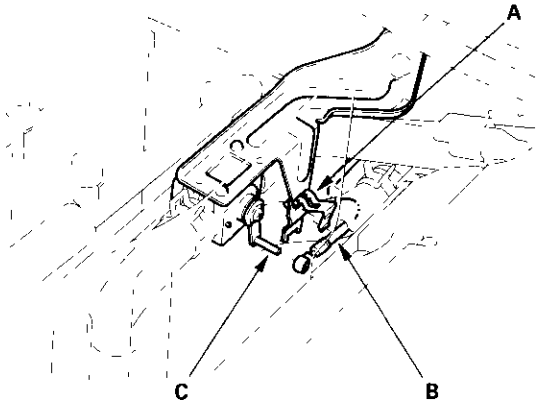


2. From under the dash, disconnect the heater valve cable housing from the cable clamp (A), and disconnect the heater valve cable (B) from the air mix control linkage (C).

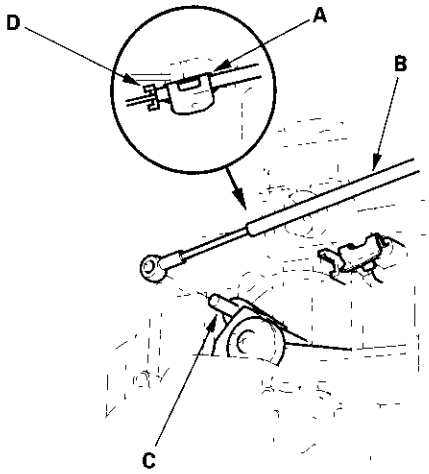


3. Set the temperature control dial on Max Cool with the ignition switch ON (II).

4. Attach the heater valve cable (B) to the air mix control linkage (C) as shown above. Hold the end of the heater valve cable housing against the stop (D), then snap the heater valve cable housing into the cable clamp (A).

5. From under the hood, turn the heater valve arm (C) to the fully closed position as shown, and hold it. Attach the heater valve cable (B) to the heater valve arm, and gently pull on the heater valve cable housing to take up any slack, then install the heater valve cable housing into the cable clamp (A).

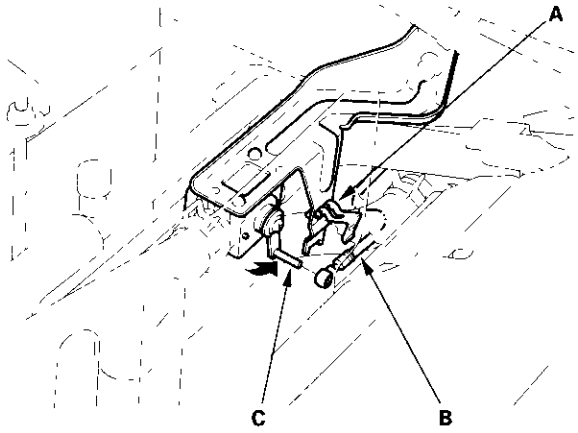

## Compressor Replacement

1. If the compressor is marginally operable, run the engine at idle speed, and let the air conditioning work for a few minutes, then shut the engine off.
2. Make sure you have the anti-theft code for the radio, then write down the frequencies for the radio's preset buttons.
3. Disconnect the negative cable from the battery.
4. Recover the refrigerant with a recovery/recycling/charging station (see page 21-51).
5. Remove the air cleaner housing (see step 5 on page 6-25).
6. Remove the alternator (see page 4-26).
7. Remove the nuts, then disconnect the suction line (A) and the discharge line (B) from the compressor. Plug or cap the lines immediately after disconnecting them to avoid moisture and dust contamination.

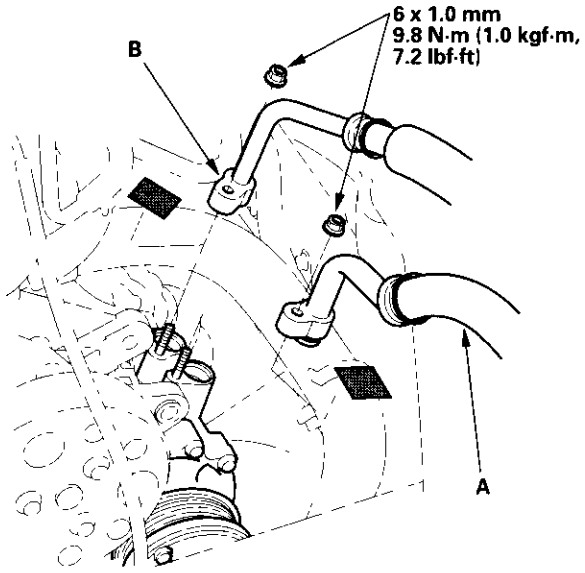


8. Disconnect the compressor clutch connector, then remove the mounting bolts and the compressor.

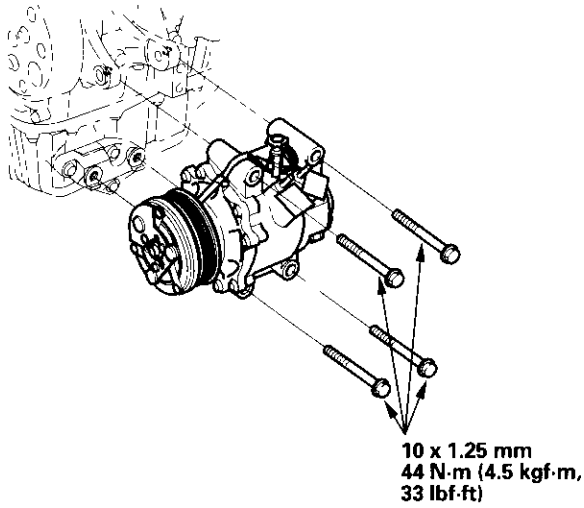


9. If necessary, remove the mounting bolts and the compressor bracket.

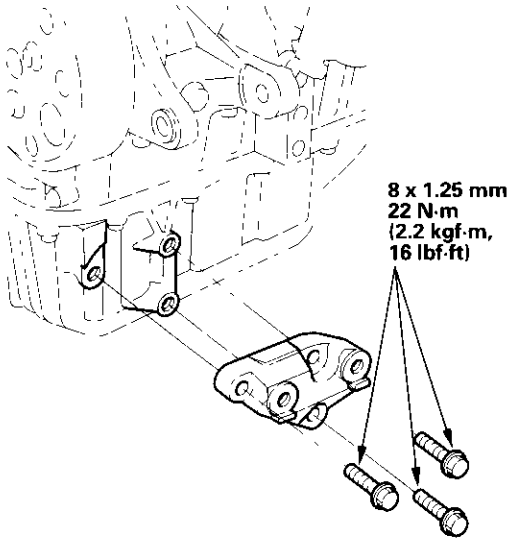

10. Install the compressor in the reverse order of removal, and note these items:

    - If you're installing a new compressor, you must calculate the amount of refrigerant oil to be removed from it (see page 21-6).
    - Replace the O-rings with new ones at each fitting, and apply a thin coat of refrigerant oil before installing them. Be sure to use the correct O-rings for HFC-134a (R-134a) to avoid leakage.
    - Use refrigerant oil (KEIHIN SP-10) for HFC-134a KEIHIN spiral type compressor only.
    - To avoid contamination, do not return the oil to the container once dispensed, and never mix it with other refrigerant oils.
    - Immediately after using the oil, reinstall the cap on the container, and seal it to avoid moisture absorption.
    - Do not spill the refrigerant oil on the vehicle; it may damage the paint. If the refrigerant oil contacts the paint, wash it off immediately.
    - Charge the system (see page 21-53).
    - Do the ECM idle learn procedure (see page 11-100).
    - Enter the anti-theft code for the radio, then enter the customer's radio station presets.
    - For '01-03 models, reset the clock.

## Compressor Clutch Check

1. Check the armature plate for discoloration, peeling, or other damage. If there is damage, replace the clutch set (see page 21-47).

2. Check the rotor pulley bearing play and drag by rotating the rotor pulley by hand. Replace the clutch set with a new one if it is noisy or has excessive play/drag (see page 21-47).

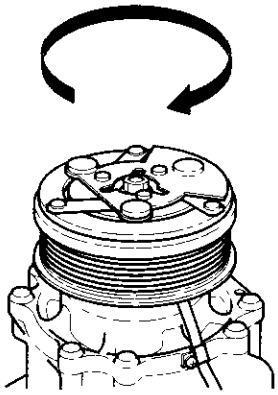

3. Measure the clearance between the rotor pulley (A) and the armature plate (B) all the way around. If the clearance is not within specified limits, remove the armature plate (see page 21-47) and add or remove shims as needed to increase or decrease clearance.

   **Clearance: 0.5 ± 0.15 mm (0.020 ± 0.006 in.)**

   NOTE: The shims are available in four thicknesses: 0.1 mm, 0.2 mm, 0.4 mm, and 0.5 mm.

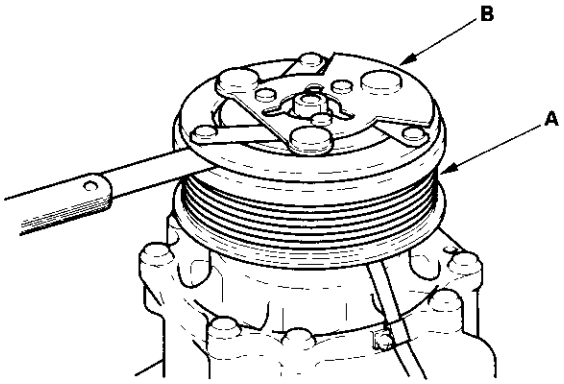


4. Release the field coil connector from the holder, then disconnect it. Check the thermal protector for continuity. If there is no continuity, replace the thermal protector (see page 21-49).

   NOTE: The thermal protector will have no continuity above 252 to 262°F (122 to 128°C). When the temperature drops below 241 to 219°F (116 to 104°C), the thermal protector will have continuity.

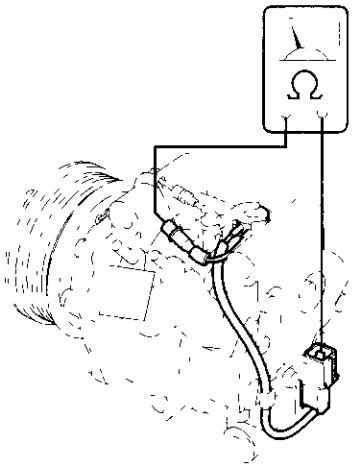


5. Check resistance of the field coil. If resistance is not within specifications, replace the coil (see page 21-47).

   **Field Coil Resistance: 3.05 – 3.35 ohms at 68°F (20°C)**

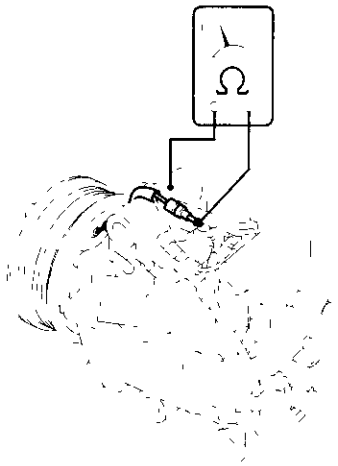

## Compressor Clutch Overhaul

**Special Tool Required**
A/C clutch holder, Robinair 10204, Kent-Moore J37872, or Honda Tool and Equipment KMT-J33939, commercially available

1. Remove the center nut (A) while holding the armature plate with a commercially available A/C clutch holder (B).

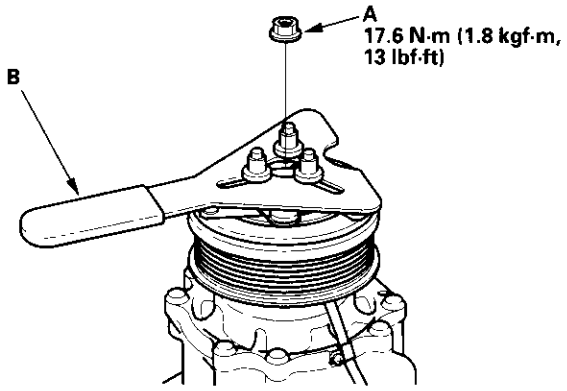


2. Remove the armature plate (A) and shim(s) (B), taking care not to lose the shim(s). If the clutch needs adjustment, increase or decrease the number and thickness of shims as nesessary, then reinstall the armature plate, and recheck its clearance (see page 21-46).

   NOTE: The shims are available in four thickness: 0.1 mm, 0.2 mm, 0.4 mm, and 0.5 mm.

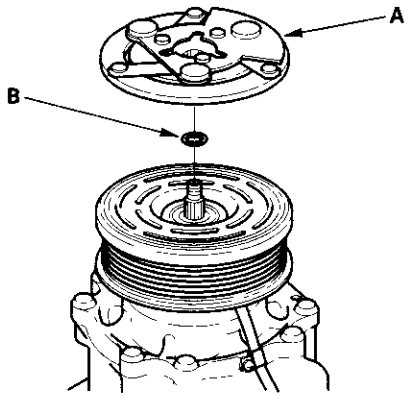


3. If you are replacing the field coil, remove the snap ring (A) with snap ring pliers, then remove the rotor pulley (B). Be careful not to damage the pulley and compressor.

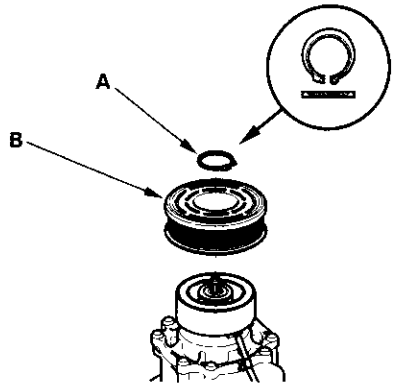


4. Remove the bolt and holder (A), then disconnect the field coil connector (B). Loosen the clamp screw (C) to free the field coil wire. Remove the snap ring (D) with snap ring pliers, then remove the field coil (E). Be careful not to damage the field coil and compressor.

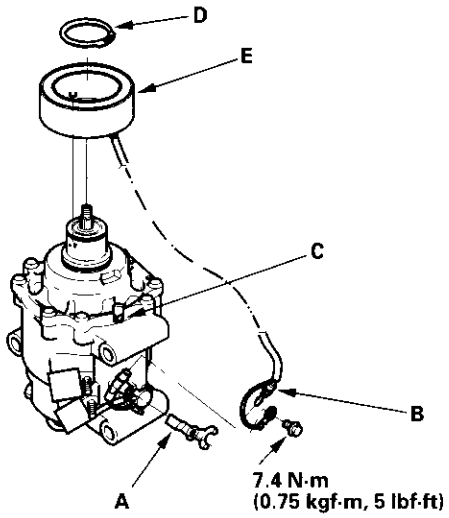


(cont'd)

## Compressor Clutch Overhaul (cont'd)

5. Reassemble the clutch in the reverse order of disassembly, and note these items:

   - Install the field coil with the wire side facing down, and align the boss on the field coil with the hole in the compressor.
   - Clean the rotor pulley and compressor sliding surfaces with contact cleaner or other non-petroleum solvent.
   - Install new snap rings, note the installation direction, and make sure they are fully seated in the groove.
   - Make sure that the rotor pulley turns smoothly after it's reassembled.
   - Route and clamp the wires properly or they can be damaged by the rotor pulley.

## Compressor Thermal Protector Replacement

1. Remove the bolt, the ground terminal (A), and the holder (B). Disconnect the field coil connector (C), then remove the thermal protector (D).

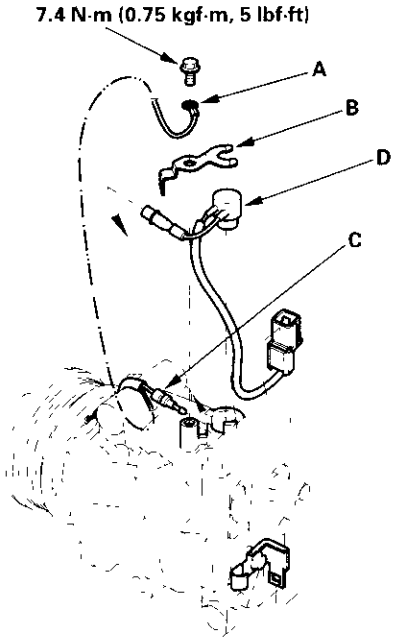


2. Replace the thermal protector (A) with a new one, and apply silicone sealant (B) to the bottom of the thermal protector.

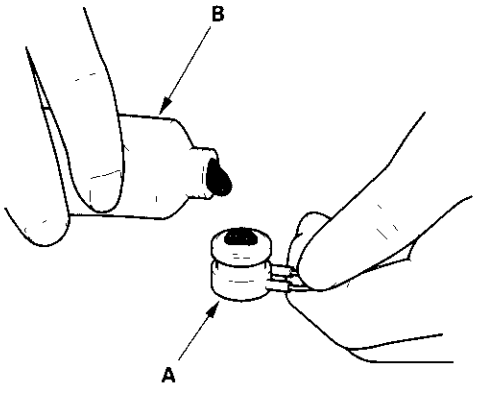


3. Install the thermal protector in the reverse order of removal.

## Compressor Relief Valve Replacement

1. Recover the refrigerant with a recovery/recycling/charging station (see page 21-51).

2. Remove the relief valve (A), and the O-ring (B). Plug the opening to keep foreign matter from entering the system and the compressor oil from running out.

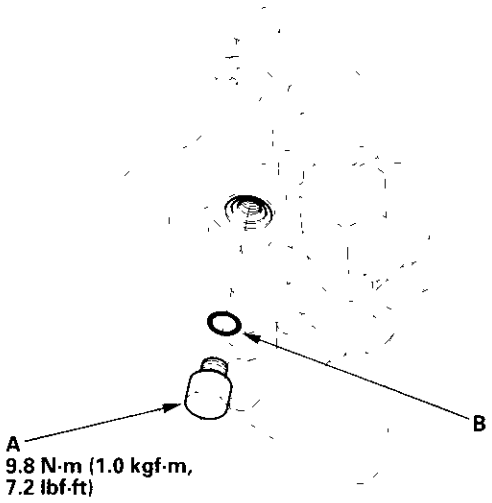


3. Clean the mating surfaces.

4. Replace the O-ring with a new one at the relief valve, and apply a thin coat of refrigerant oil before installing it.

5. Remove the plug, and install and tighten the relief valve.

6. Charge the system (see page 21-53).

## Condenser Replacement

1. Recover the refrigerant with a recovery/recycling/charging station (see page 21-51).

2. Remove the air cleaner housing (see step 5 on page 6-25).

3. Remove the bolts, then remove the upper mount brackets from the radiator.

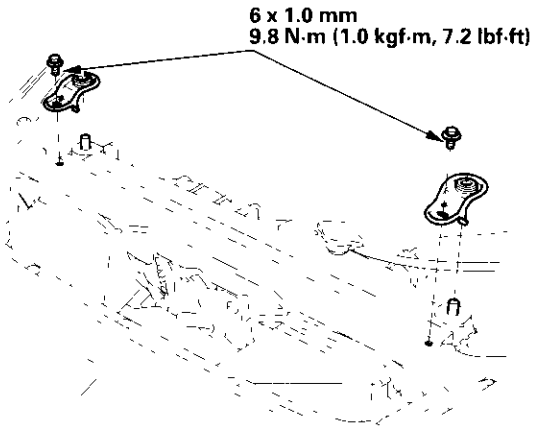


4. Remove the bolts, then disconnect the discharge line (A) and the condenser line (B) from the condenser. Plug or cap the lines immediately after disconnecting them to avoid moisture and dust contamination.

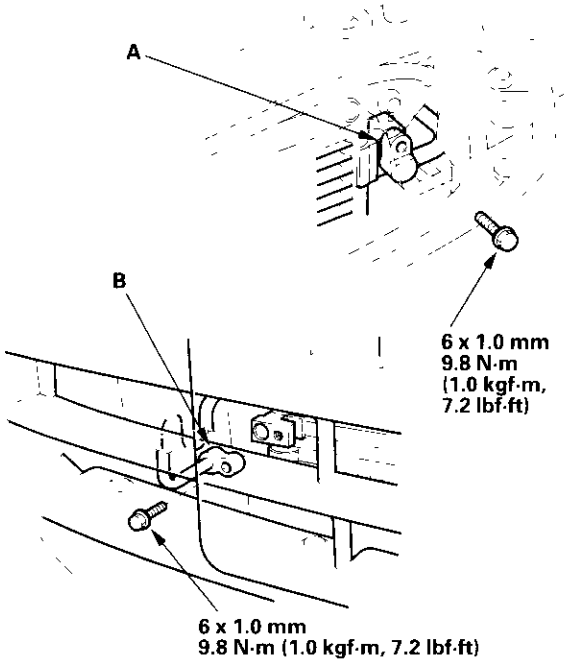


5. Remove the bolts and the upper mount brackets (A), then remove the condenser (B) by lifting it up. Be careful not to damage the radiator or the condenser fins when removing the condenser.

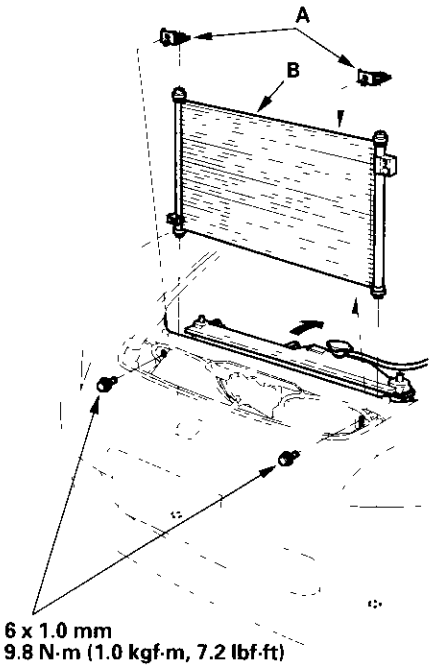


6. Install the condensor in the reverse order of removal, and note these items:

- If you're installing a new condenser, add refrigerant oil (KEIHIN SP-10) (see page 21-6).
- Replace the O-rings with new ones at each fitting, and apply a thin coat of refrigerant oil before installing them. Be sure to use the correct O-rings for HFC-134a (R-134a) to avoid leakage.
- Immediately after using the oil, reinstall the cap on the container, and seal it to avoid moisture absorption.
- Do not spill the refrigerant oil on the vehicle; it may damage the paint. If the refrigerant oil contacts the paint, wash it off immediately.
- Be careful not to damage the radiator or the condenser fins when installing the condenser.
- Charge the system (see page 21-53).

## Refrigerant Recovery

**⚠CAUTION**

- Air conditioning refrigerant or lubricant vapor can irritate your eyes, nose, or throat.
- Be careful when connecting service equipment.
- Do not breathe refrigerant or vapor.

Use only service equipment that is U.L.-listed and is certified to meet the requirements of SAE J2210 to remove HFC-134a (R-134a) from the air conditioning system.

If accidental system discharge occurs, ventilate the work area before resuming service.

Additional health and safety information may be obtained from the refrigerant and lubricant manufacturers.

1. Connect a R-134a refrigerant recovery/recycling/charging station (A) to the high-pressure service port (B) and the low-pressure service port (C) (see page 21-3), as shown, following the equipment manufacturer's instructions.

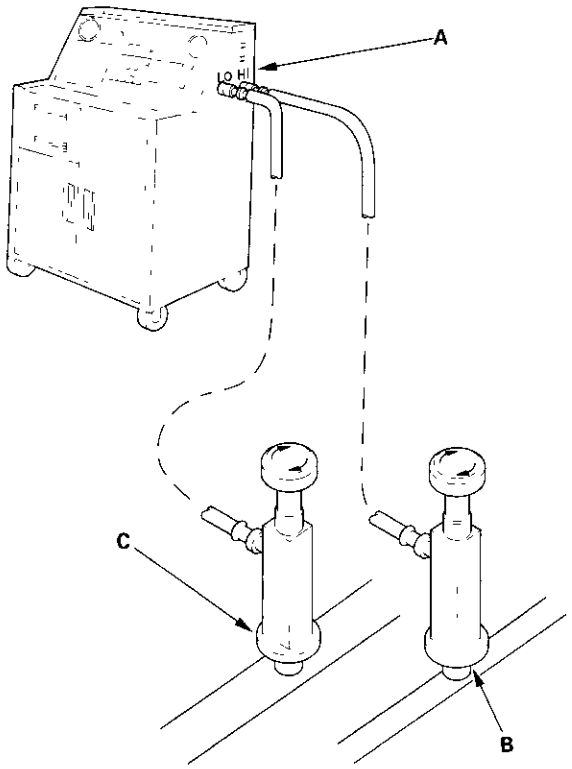


2. Measure the amount of refrigerant oil removed from the A/C system after the recovery process is completed. Be sure to put the same amount of new refrigerant oil back into the A/C system before charging.

## System Evacuation

**⚠CAUTION**

- Air conditioning refrigerant or lubricant vapor can irritate your eyes, nose, or throat.
- Be careful when connecting service equipment.
- Do not breathe refrigerant or vapor.

Use only service equipment that is U.L.-listed and is certified to meet the requirements of SAE J2210 to remove HFC-134a (R-134a) from the air conditioning system.

If accidental system discharge occurs, ventilate the work area before resuming service.

Additional health and safety information may be obtained from the refrigerant and lubricant manufacturers.

1. When an A/C system has been opened to the atmosphere, such as during installation or repair, it must be evacuated using a R-134a refrigerant recovery/recycling/charging station (If the system has been open for several days, the receiver/dryer should be replaced, and the system should be evacuated for several hours.)
2. Connect a R-134a refrigerant recovery/recycling/charging station (A) to the high-pressure service port (B) and the low-pressure service port (C) (see page 21-3), as shown, following the equipment manufacturer's instructions. Evacuate the system.

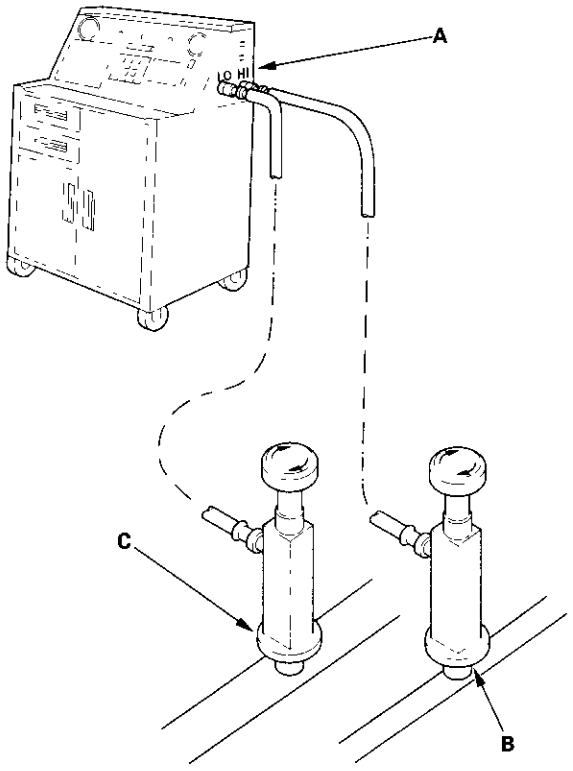


3. If the low-pressure does not reach more than 93.3 kPa (700 mm Hg, 27.6 in.Hg) in 15 minutes, there is probably a leak in the system. Partially charge the system, and check for leaks (see step 3 on page 21-54).

## System Charging

**⚠CAUTION**

- Air conditioning refrigerant or lubricant vapor can irritate your eyes, nose, or throat.
- Be careful when connecting service equipment.
- Do not breathe refrigerant or vapor.

Use only service equipment that is U.L.-listed and is certified to meet the requirements of SAE J2210 to remove HFC-134a (R-134a) from the air conditioning system.

If accidental system discharge occurs, ventilate the work area before resuming service.

Additional health and safety information may be obtained from the refrigerant and lubricant manufacturers.

1. Connect a R-134a refrigerant recovery/recycling/charging station (A) to the high-pressure service port (B) and the low-pressure service port (C) (see page 21-3), as shown, following the equipment manufacturer's instructions.

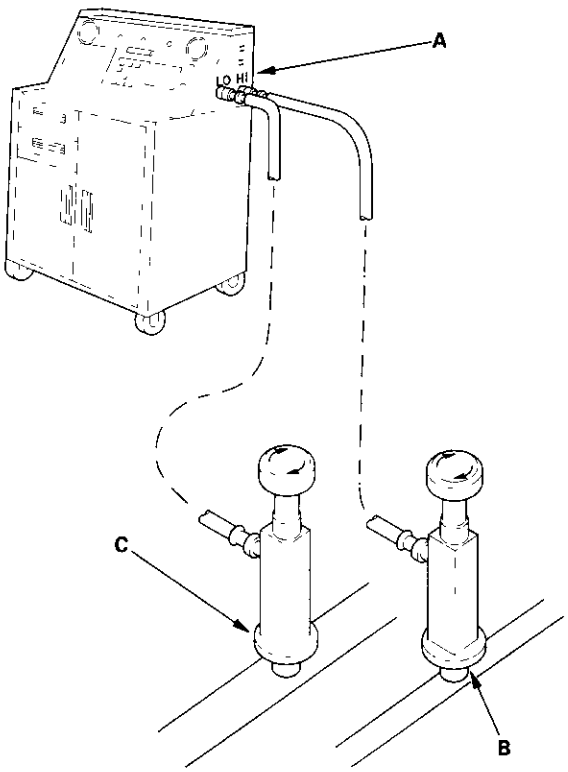


2. Evacuate the system (see page 21-52).
3. Add the same amount of new refrigerant oil to the system that was removed during recovery. Use only KEIHIN SP-10 refrigerant oil.
4. Charge the system with the specified amount of R-134a refrigerant. Do not overcharge the system; the compressor will be damaged.

   Select the appropriate units of measure for your refrigerant charging station.

   **Refrigerant capacity:**
   **550 to 600 g**
   **0.55 to 0.60 kg**
   **1.2 to 1.3 lbs**
   **19.4 to 21.2 oz**

5. Check for refrigerant leaks (see page 21-54).
6. Check for system performance (see page 21-56).

## Refrigerant Leak Test

**Special Tool Required**
Leak detector, Honda Tool and Equipment YGK-H-10PM commercially available

**⚠WARNING**

- Compressed air mixed with R-134a forms a combustible vapor.
- The vapor can burn or explode causing serious injury.
- Never use compressed air to pressure test R-134a service equipment or vehicle air conditioning system.

**⚠CAUTION**

- Air conditioning refrigerant or lubricant vapor can irritate your eyes, nose, or throat.
- Be careful when connecting service equipment.
- Do not breathe refrigerant or vapor.

Use only service equipment that is U.L.-listed and is certiified to meet the requirements of SAE J2210 to remove HFC-134a (R-134a) from the air conditioning system.

If accidental system discharge occurs, ventilate the work area before resuming service.

R-134a service equipment or vehicle air conditioning systems should not be pressure tested or leak tested with compressed air.

Additional health and safety information may be obtained from the refrigerant and lubricant manufacturers.

1. Connect a R-134a refrigerant recovery/recycling/ charging station (A) to the high-pressure service port (B) and the low-pressure service port (C) (see page 21-3), as shown, following the equipment manufacturer's instructions.

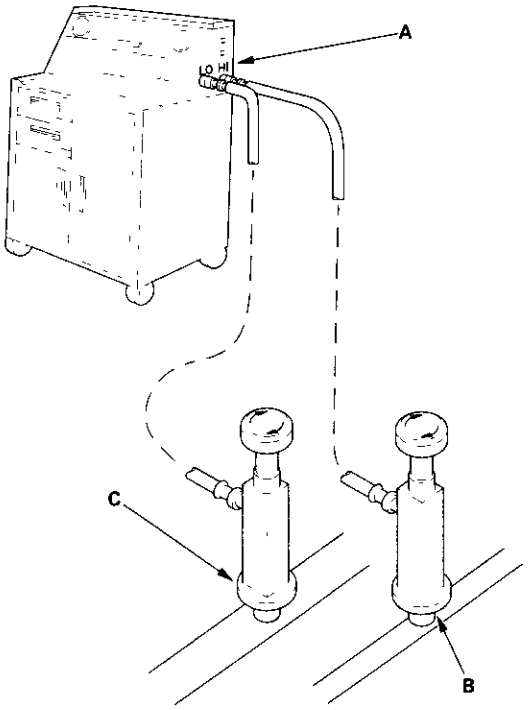


2. Open the high pressure valve to charge the system to the specified capacity, then close the supply valve, and remove the charging system couplers.

   Select the appropriate units of measure for your refrigerant charging station.

   **Refrigerant capacity:**
   **550 to 600 g**
   **0.55 to 0.60 kg**
   **1.2 to 1.3 lbs**
   **19.4 to 21.2 oz**

3. Check the system for leaks using a R-134a refrigerant leak detector with an accuracy of 14 g (0.5 oz) per year or better.

4. If you find leaks that require the system to be opened (to repair or replace hoses, fittings, etc.), recover the system.

5. After checking and repairing leaks, evacuate the system.

# A/C System Tests

## Pressure Test

| Test results | Related symptoms | Probable cause | Remedy |
|---|---|---|---|
| Discharge (high) pressure abnormally high | After stopping compressor, pressure drops to about 196 kPa (2.0 kgf/cm², 28 psi) quickly, and then falls gradually. | Air in system | Recover, evacuate (see page 21-51), and recharge with specified amount (see page 21-53). |
| | Reduced or no air flow through condenser | • Clogged condenser or radiator fins<br>• Condenser or radiator fan not working properly | • Clean<br>• Check voltage and fan rpm.<br>• Check fan direction. |
| | Line to condenser is excessively hot. | Restricted flow of refrigerant in system | Restricted lines |
| Discharge pressure abnormally low | High and low pressures are balanced soon after stopping compressor. Low side is higher than normal. | • Faulty compressor discharge valve<br>• Faulty compressor seal | Replace the compressor. |
| | Outlet of expansion valve is not frosted, low-pressure gauge indicates vacuum. | • Faulty expansion valve<br>• Moisture in system | • Replace<br>• Recover, evacuate, and recharge with specified amount. |
| Suction (low) pressure abnormally low | Expansion valve is not frosted, and low-pressure line is not cold. Low-pressure gauge indicates vacuum. | • Frozen expansion valve (Moisture in system)<br>• Faulty expansion valve | • Recover, evacuate, and recharge with specified amount.<br>• Replace |
| | Discharge temperature is low, and the air flow from vents is restricted. | Frozen evaporator | Run the fan with compressor off, then check evaporator temperature sensor. |
| | Expansion valve is frosted. | Clogged expansion valve | Clean or replace. |
| | Receiver/dryer outlet is cool, and inlet is warm (should be warm during operation). | Clogged receiver/dryer | Replace |
| Suction pressure abnormally high | Low-pressure hose and check joint are cooler than the temperature around evaporator. | Expansion valve open too long | Repair or replace. |
| | Suction pressure is lowered when condenser is cooled by water. | Excessive refrigerant in system | Recover, evacuate, and recharge with specified amount. |
| | High and low-pressure are equalized as soon as the compressor is stopped, and both gauges fluctuate while running. | • Faulty gasket<br>• Faulty high-pressure valve<br>• Foreign particle stuck in high-pressure valve | Replace the compressor. |
| Suction and discharge pressures abnormally high | Reduced air flow through condenser. | • Clogged condenser or radiator fins<br>• Condenser or radiator fan not working properly | • Clean<br>• Check voltage and fan rpm.<br>• Check fan direction. |
| Suction and discharge pressure abnormally low | Low-pressure hose and metal end areas are cooler than evaporator. | Clogged or kinked low-pressure hose parts | Repair or replace. |
| | Temperature around expansion valve is too low compared with that around receiver/dryer. | Clogged high-pressure line | Repair or replace. |
| Refrigerant leaks | Compressor clutch is dirty. | Compressor shaft seal leaking | Replace the compressor. |
| | Compressor bolt(s) are dirty. | Leaking around bolt(s) | Tighten bolt(s) or replace compressor. |
| | Compressor gasket is wet with oil. | Gasket leaking | Replace the compressor. |

(cont'd)

## A/C System Tests (cont'd)

### Performance Test

**⚠WARNING**

- Compressed air mixed with R-134a forms a combustible vapor.
- The vapor can burn or explode causing serious injury.
- Never use compressed air to pressure test R-134a service equipment or vehicle air conditioning systems.

**⚠CAUTION**

- Air conditioning refrigerant or lubricant vapor can irritate your eyes, nose, or throat.
- Be careful when connecting service equipment.
- Do not breathe refrigerant or vapor.

The performance test will help determine if the air conditioner system is operating within specifications.

Use only service equipment that is U.L.-listed and is certified to meet the requirements of SAE J2210 to remove HFC-134a (R-134a) from the air conditioning system.

If accidental system discharge occurs, ventilate the work area before resuming service.

R-134a service equipment or vehicle air conditioning systems should not be pressure tested or leak tested with compressed air.

Additional health and safety information may be obtained from the refrigerant and lubricant manufacturers.

1. Connect a R-134a refrigerant recovery/recycling/charging station to the high-pressure service port and the low-pressure service port, following the equipment manufacturer's instructions.
2. Determine the relative humidity and air temperature.
3. Remove the passenger's dashboard lower cover (see page 20-81).
4. Insert a thermometer (A) in the center vent, and place another thermometer (B) near the blower unit.

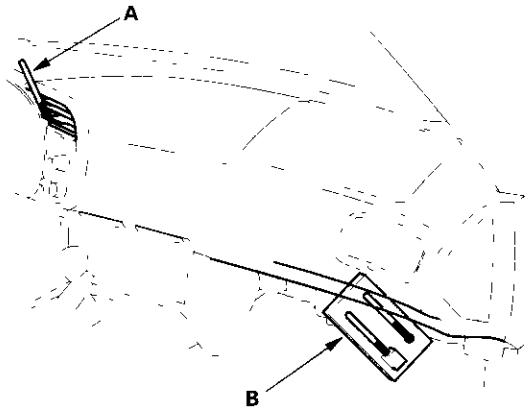


5. Test conditions:
   - Avoid direct sunlight, put the top up.
   - Open the hood.
   - Open the front doors.
   - Set the temperature control dial on Max Cool, the mode control dial on Vent, and the recirculation control switch on Recirculate.
   - Turn the A/C switch on and the fan switch on Max.
   - Run the engine at 1,500 rpm.
   - No driver or passengers in vehicle.
6. After running the air conditioning for 10 minutes under the above test conditions, read the delivery temperature from the thermometer in the center vent, the intake temperature near the blower unit, and the high and low system pressure from the A/C gauges.

7. To complete the charts:

- Mark the delivery temperature along the vertical line.
- Mark the intake temperature (ambient air temperature) along the bottom line.
- Draw a line straight up from the air temperature to the humidity.
- Mark a point 10 % above and 10 % below the humidity level.
- From each point, draw a horizontal line across the delivery temperature.
- The delivery temperature should fall between the two lines.
- Complete the low-side pressure test and high-side pressure test in the same way.
- Any measurements outside the line may indicate the need for further inspection.

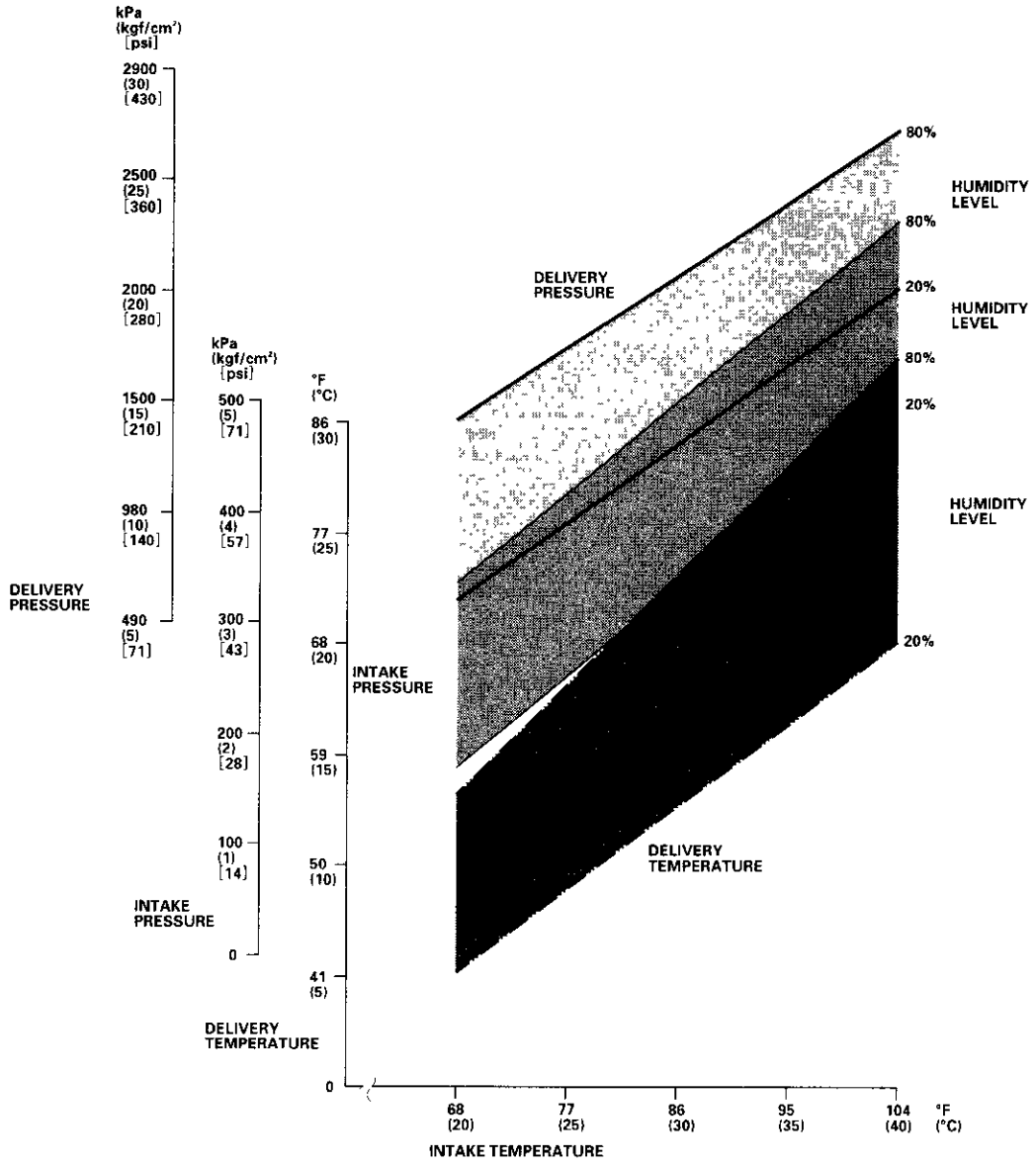

# Body Electrical


**Body Electrical**
General Troubleshooting Information ..... 22-2
**Relay and Control Unit Locations ..... 22-5**
**Connectors and Harnesses ..... 22-9**
**Fuse/Relay Boxes ..... 22-32**
**Power Distribution ..... 22-35**
**Ground Distribution .. 22-38**
**Battery ..... 22-39**
**Relays ..... 22-40**
***Ignition Switch**
Test ..... 22-43
***Gauges**
Component Location Index ..... 22-44
Gauge Bulb Replacement .... 22-46
Circuit Diagram ..... 22-47
Gauge Assembly Replacement ..... 22-52
VSS Replacement ..... 22-52
VSS Circuit Troubleshooting ..... 22-53
Maintenance Required Indicator Reset Procedure ..22-54
Tachometer Circuit Troubleshooting ..... 22-55
Coolant Temperature Gauge Circuit Troubleshooting .... 22-55
**Lights-on, Key-in, Seat Belt Reminder System**
Circuit Diagram ..... 22-56
System Input Test ..... 22-57
**Exterior Lights**
Component Location Index ..... 22-59
Circuit Diagram ..... 22-61
Brake Lights Circuit Diagram ..... 22-64
Back-up Lights Circuit Diagram ..... 22-64
Combination Light Switch Test/Replacement ..... 22-65
DRL Control Unit Input Test ..... 22-66
HID Lamp System Troubleshooting ..... 22-68
HID Bulb Removal ..... 22-69
Headlight Replacement ..... 22-71
Headlight Adjustment ..... 22-72
Side Turn Signal Light Replacement ..... 22-74
Taillight Replacement ..... 22-74
High Mount Brake Light Replacement ..... 22-75
License Plate Light Replacement ..... 22-75
**Turn Signal/Hazard Flasher System**
Component Location Index ..... 22-76
Circuit Diagram ..... 22-77
Turn Signal/Hazard Relay Input Test ..... 22-78
Hazard Warning Switch Test ..... 22-79
**Interior Lights**
Component Location Index ..... 22-80
Circuit Diagram ..... 22-81
Ceiling/Spotlights Test ..... 22-82
Trunk Light Test ..... 22-83
Trunk Lid Latch Switch Test . 22-83
**Dash Lights Brightness Controller**
Circuit Diagram ..... 22-84
Controller Input Test ..... 22-85
***Audio System**
Component Location Index ..... 22-87
Circuit Diagram ..... 22-88
Audio Unit Removal ..... 22-89
Audio Unit Connector Replacement ..... 22-89
Radio Remote Switch Test ... 22-90
Speaker Replacement ..... 22-91
Mast Antenna Replacement ..... 22-92
**Accessory Power Socket**
Component Location Index ..... 22-93
Circuit Diagram ..... 22-94
Accessory Power Socket Test/Replacement ..... 22-95
**Horn**
Component Location Index ..... 22-96
Circuit Diagram ..... 22-97
Horn Test ..... 22-97
Switch Test ..... 22-98
**Trunk Opener**
Component Location Index ..... 22-99
Circuit Diagram ..... 22-100
Trunk Opener Switch Test ... 22-101
Trunk Opener Solenoid Test ..... 22-101
**Power Mirrors**
Component Location Index ..... 22-102
Circuit Diagram ..... 22-103
Function Test ..... 22-104
Power Mirror Switch Test .... 22-105
Power Mirror Actuator Test ..... 22-105
Power Mirror Actuator Replacement ..... 22-106
**Wiper/Washer**
Component Location Index ..... 22-107
Circuit Diagram ..... 22-108
Intermittent Wiper Control Circuit Input Test ..... 22-110
Wiper/Washer Switch Test/Replacement ..... 22-111
Wiper Motor Test ..... 22-112
Washer Motor Test ..... 22-112
Washer Reservoir Replacement ..... 22-113
Windshield Wiper Motor Replacement ..... 22-114
Washer Tube Replacement ..... 22-115
**Immobilizer System**
Component Location Index ..... 22-116
System Description ..... 22-117
Circuit Diagram ..... 22-119
Troubleshooting ..... 22-120
Immobilizer Receiver Unit Replacement ..... 22-121
**Power Windows**
Component Location Index ..... 22-122
Circuit Diagram ..... 22-123
Master Switch Test ..... 22-124
Master Switch Input Test ..... 22-125
Passenger's Window Switch Test/Replacement ..... 22-128
Driver's Window Motor Test ..... 22-129
Passenger's Window Motor Test ..... 22-129
**Keyless/Power Door Locks**
Component Location Index ..... 22-130
Circuit Diagram ..... 22-131
Keyless Door Lock Control Unit Input Test ..... 22-132
Ignition Key Switch Test ..... 22-135
Driver's Door Lock Knob Switch Test ..... 22-136
Driver's Door Lock Actuator Test ..... 22-136
Passenger's Door Lock Actuator Test ..... 22-137
Driver's Door Key Cylinder Switch Test ..... 22-137
Transmitter Test ..... 22-138
Transmitter Programming ... 22-138
**Convertible Top**
Component Location Index ..... 22-139
Circuit Diagram ..... 22-140
System Desciption ..... 22-142
Convertible Top Switch Test ..... 22-143
Convertible Top Control Unit Input Test ..... 22-144
Convertible Top Motor Test ..... 22-147
**Removable Hardtop**
Component Location Index ..... 22-149
Convertible Top Disable Switch Test ..... 22-150
**Rear Window Defogger**
Component Location Index ..... 22-151
Circuit Diagram ..... 22-153
Switch Test ..... 22-155
Function Test ..... 22-156
Defogger Wire Repair ..... 22-157

## General Troubleshooting Information

### Tips and Precautions

**Before Troubleshooting**

1. Check applicable fuses in the appropriate fuse/relay box.
2. Check the battery for damage, state of charge, and clean and tight connections.

   **NOTICE**

   - Do not quick-charge a battery unless the battery ground cable has been disconnected, otherwise you will damage the alternator diodes.
   - Do not attempt to crank the engine with the battery ground cable loosely connected or you will severely damage the wiring.

3. Check the alternator-compressor belt tension.

**Handling Connectors**

- Make sure the connectors are clean and have no loose wire terminals.
- Make sure multiple cavity connectors are packed with dielectric grease (except watertight connectors).
- All connectors have push-down release type locks (A).

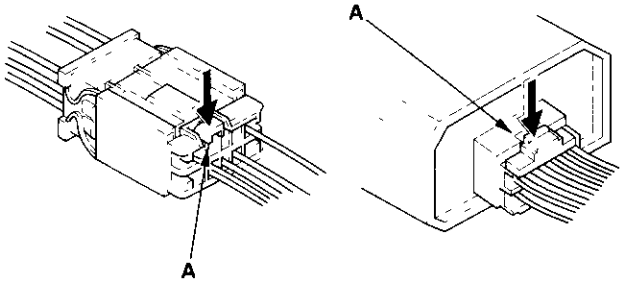


- Some connectors have a clip on their side used to attach them to a mount bracket on the body or on another component. This clip has a pull type lock.
- Some mounted connectors cannot be disconnected unless you first release the lock and remove the connector from its mount bracket (A).

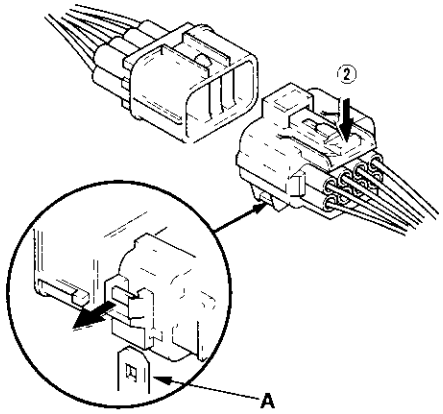


- Never try to disconnect connectors by pulling on their wires; pull on the connector halves instead.
- Always reinstall plastic covers.

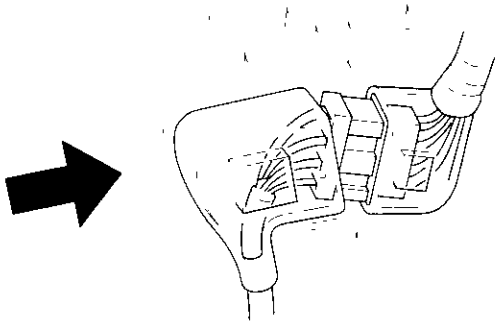

- Before connecting connectors, make sure the terminals (A) are in place and not bent.

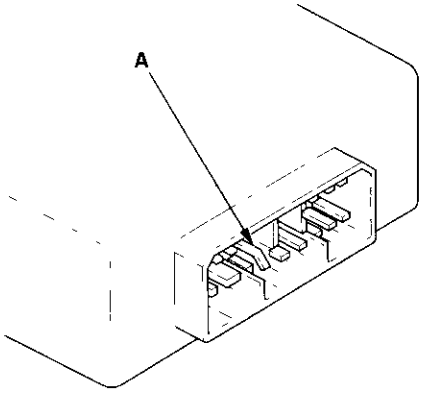

- Check for loose retainer (A) and rubber seals (B).

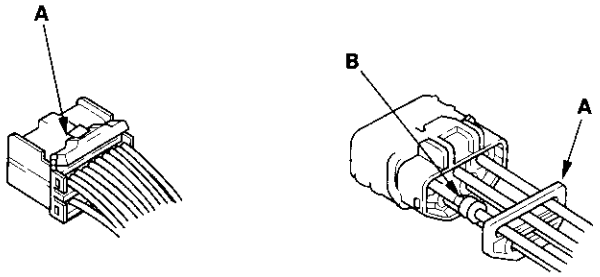


- The backs of some connectors are packed with dielectric grease. Add grease if necessary. If the grease is contaminated, replace it.

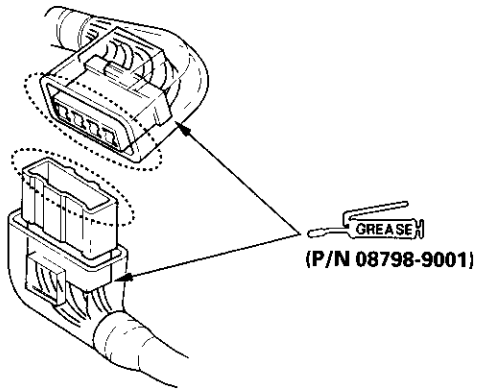


- Insert the connector all the way and make sure it is securely locked.
- Position wires so that the open end of the cover faces down.

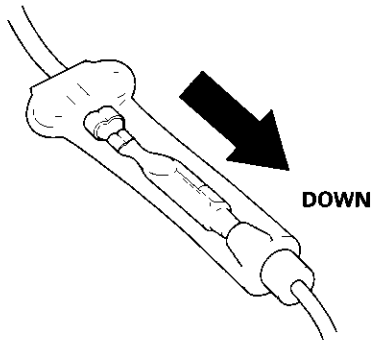


**Handling Wires and Harnesses**

- Secure wires and wire harnesses to the frame with their respective wire ties at the designated locations.
- Remove clips carefully; don't damage their locks (A).

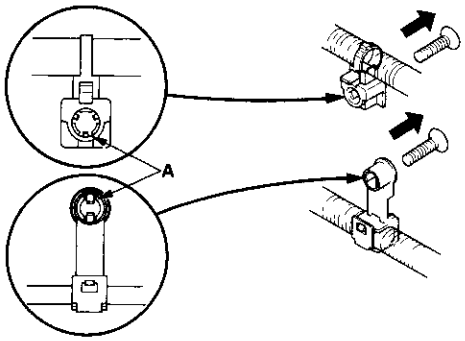


- Slip pliers (A) under the clip base and through the hole at an angle, then squeeze the expansion tabs to release the clip.

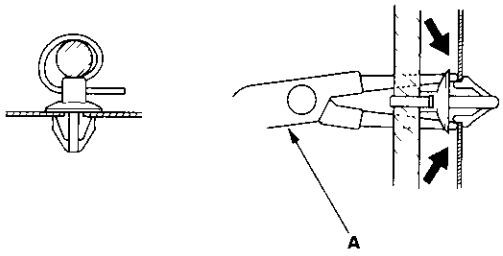


- After installing harness clips, make sure the harness doesn't interfere with any moving parts.
- Keep wire harnesses away from exhaust pipes and other hot parts, from sharp edges of brackets and holes, and from exposed screws and bolts.
- Seat grommets in their grooves properly (A). Do not leave grommets distorted (B).

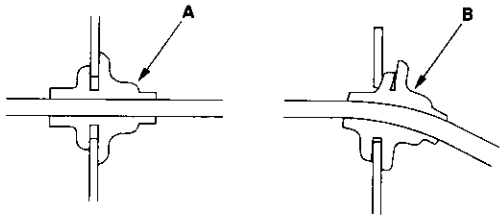


(cont'd)

## General Troubleshooting Information (cont'd)

**Testing and Repairs**

- Do not use wires or harnesses with broken insulation. Replace them or repair them by wrapping the break with electrical tape.
- After installing parts, make sure that no wires are pinched under them.
- When using electrical test equipment, follow the manufacturer's instructions and those described in this manual.
- If possible, insert the probe of the tester from the wire side (except waterproof connector).

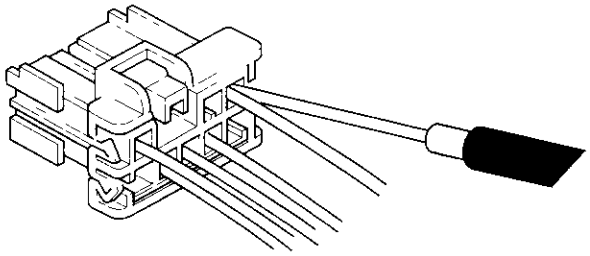

- Use back probe adaptor 07TAZ-001020A.

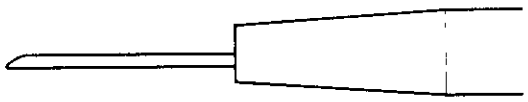

- Refer to the instructions in the Honda Terminal Kit for identification and replacement of connector terminals.

## Five-step Troubleshooting

1. Verify The Complaint
   Turn on all the components in the problem circuit to verify the customer complaint. Note the symptoms. Do not begin disassembly or testing until you have narrowed down the problem area.

2. Analyze The Schematic
   Look up the schematic for the problem circuit. Determine how the circuit is supposed to work by tracing the current paths from the power feed through the circuit components to ground. If several circuits fail at the same time, the fuse or ground is a likely cause.

   Based on the symptoms and your understanding of the circuit operation, identify one or more possible causes of the problem.

3. Isolate The Problem By Testing The Circuit
   Make circuit tests to check the diagnosis you made in step 2. Keep in mind that a logical, simple procedure is the key to efficient troubleshooting. Test for the most likely cause of failure first. Try to make tests at points that are easily accessible.

4. Fix The Problem
   Once the specific problem is identified, make the repair. Be sure to use proper tools and safe procedures.

5. Make Sure The Circuit Works
   Turn on all components in the repaired circuit in all modes to make sure you've fixed the entire problem. If the problem was a blown fuse, be sure to test all of the circuits on the fuse. Make sure no new problems turn up and the original problem does not recur.

## Wire Color Codes

The following abbreviations are used to identify wire colors in the circuit schematics:

| | |
|---|---|
| WHT | White |
| YEL | Yellow |
| BLK | Black |
| BLU | Blue |
| GRN | Green |
| RED | Red |
| ORN | Orange |
| PNK | Pink |
| BRN | Brown |
| GRY | Gray |
| PUR | Purple |
| LT BLU | Light Blue |
| LT GRN | Light Green |

The wire insulation has one color or one color with another color stripe. The second color is the stripe.

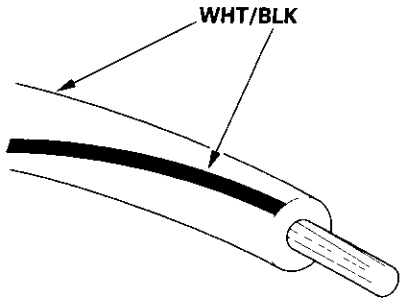

# Relay and Control Unit Locations

## Engine Compartment

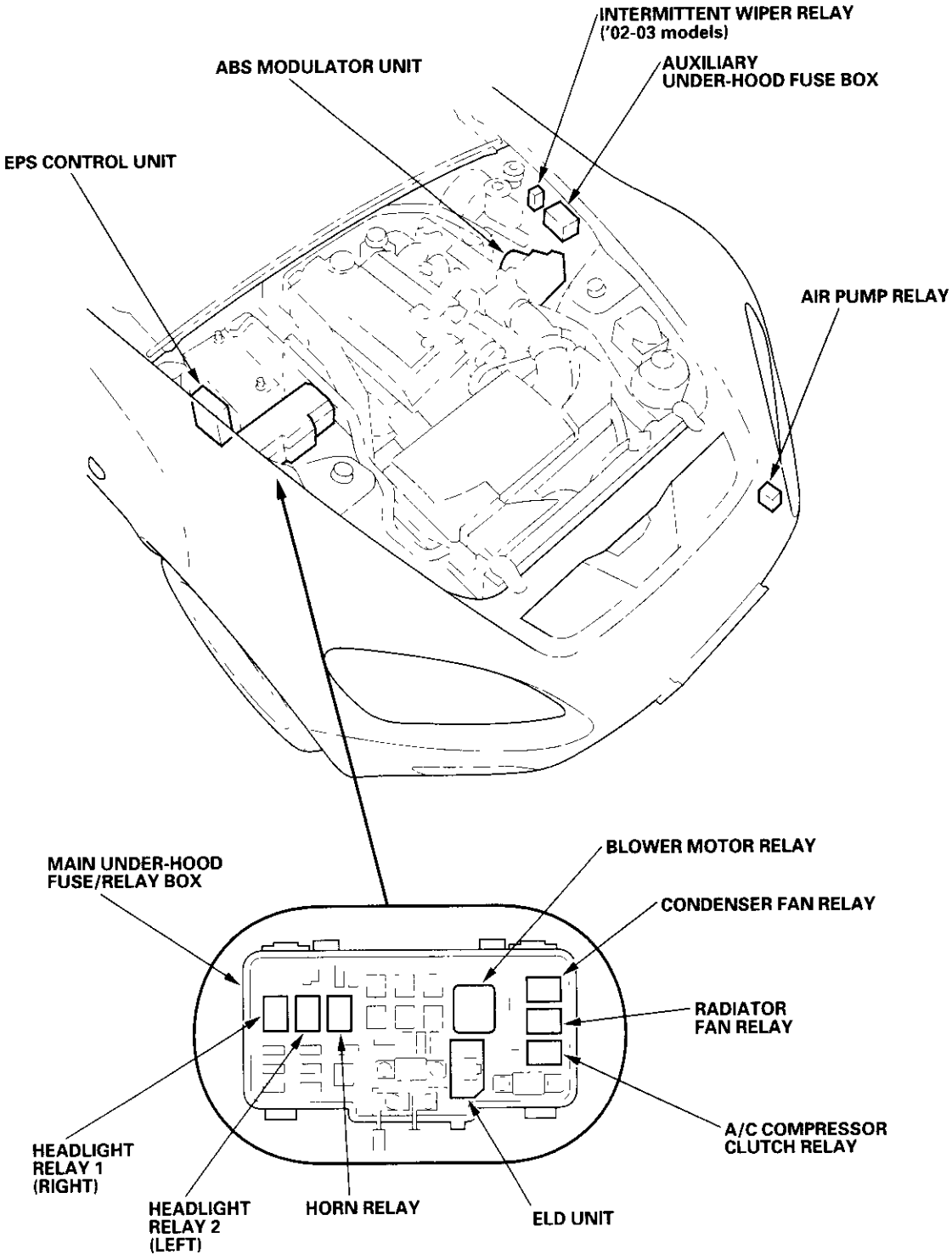

# Dashboard

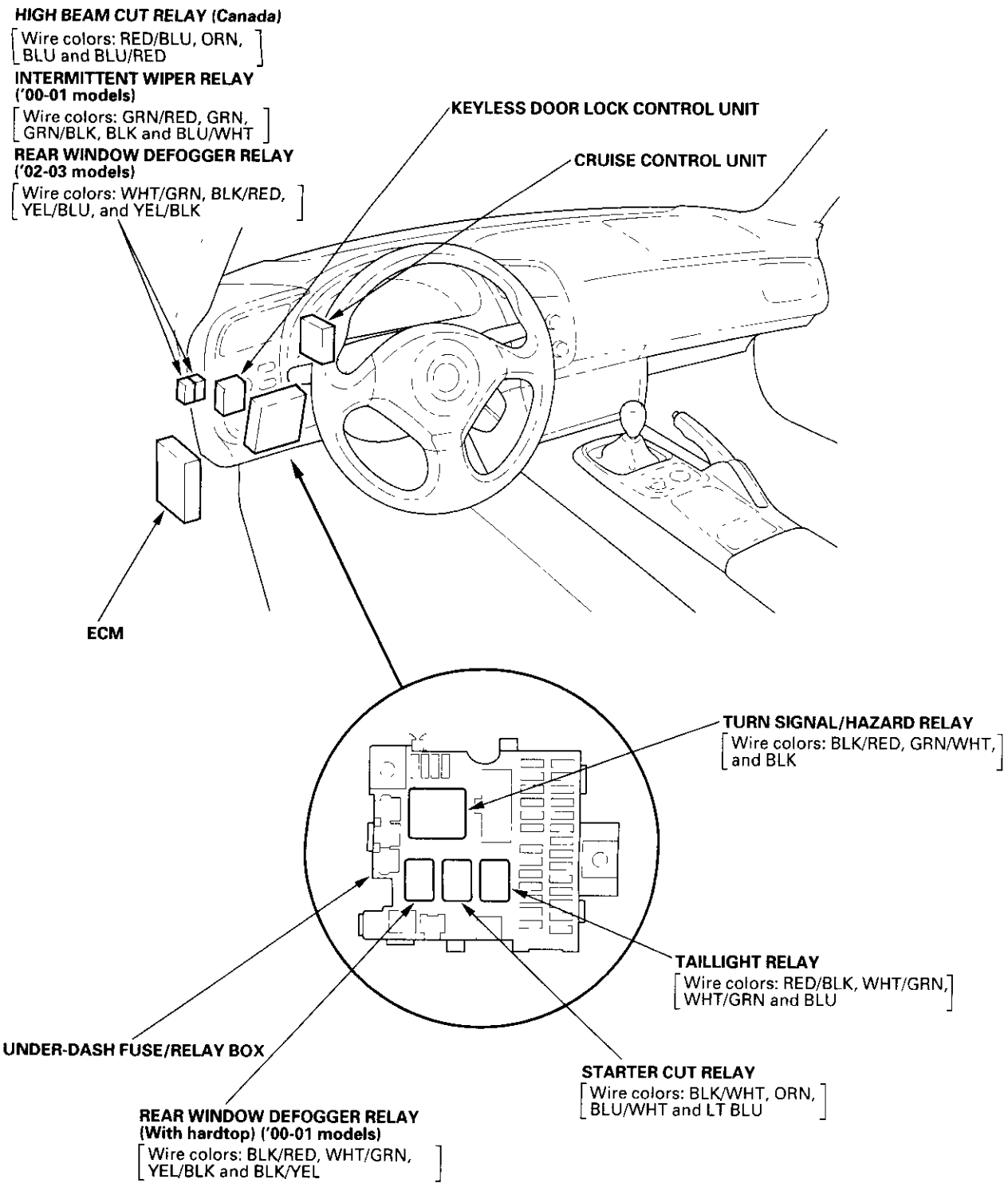
HIGH BEAM CUT RELAY (Canada)
[Wire colors: RED/BLU, ORN, BLU and BLU/RED]
INTERMITTENT WIPER RELAY ('00-01 models)
[Wire colors: GRN/RED, GRN, GRN/BLK, BLK and BLU/WHT]
REAR WINDOW DEFOGGER RELAY ('02-03 models)
[Wire colors: WHT/GRN, BLK/RED, YEL/BLU, and YEL/BLK]
KEYLESS DOOR LOCK CONTROL UNIT
CRUISE CONTROL UNIT
ECM
TURN SIGNAL/HAZARD RELAY
[Wire colors: BLK/RED, GRN/WHT, and BLK]
TAILLIGHT RELAY
[Wire colors: RED/BLK, WHT/GRN, WHT/GRN and BLU]
UNDER-DASH FUSE/RELAY BOX
STARTER CUT RELAY
[Wire colors: BLK/WHT, ORN, BLU/WHT and LT BLU]
REAR WINDOW DEFOGGER RELAY (With hardtop) ('00-01 models)
[Wire colors: BLK/RED, WHT/GRN, YEL/BLK and BLK/YEL]

# Relay and Control Unit Locations

## Dashboard and Door

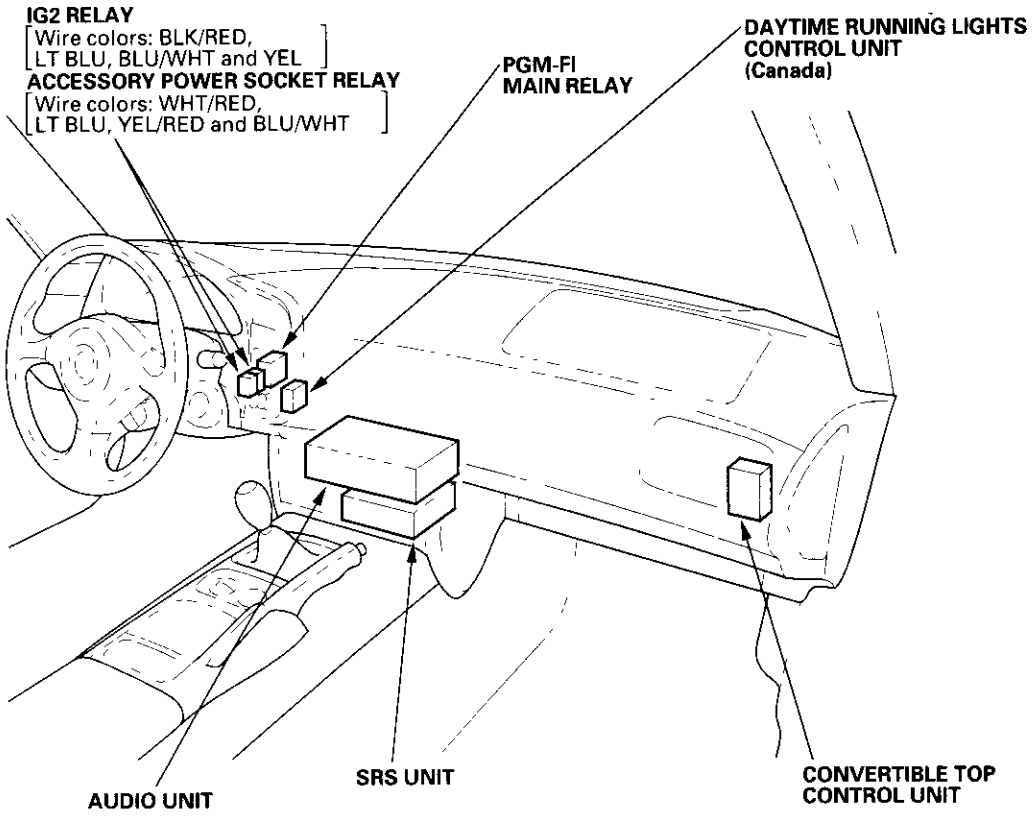


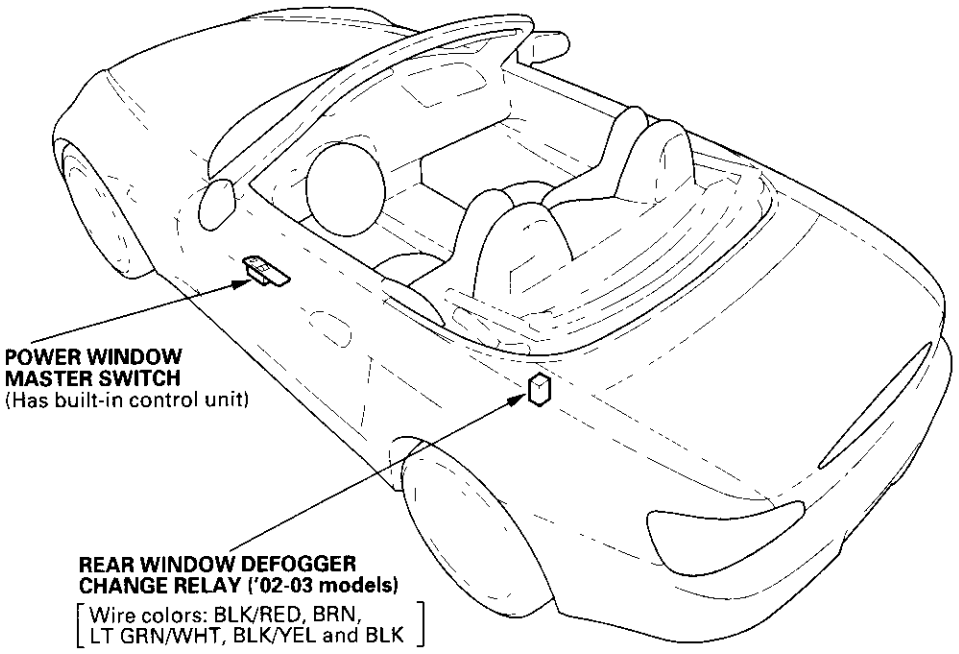

## Connector Index

| Harness | Location | | | |
|---|---|---|---|---|
| | Engine Compartment | Dashboard | Others (Floor, Door, Trunk and Roof) | Notes |
| Starter cables | T2, T3 and T7<br>G3 | | | (see page 22-10) |
| Battery ground cable | G1 and (−) | | | (see page 22-10) |
| Engine ground cable | T5<br>G2 | | | (see page 22-10) |
| EPS subharness | C351<br>T1, T6 and (+)<br>G351 | | | (see page 22-10) |
| EPS gearbox ground cable | T4,<br>G4 | | | (see page 22-10) |
| Engine wire harness | T101 through T103<br>G101 | C101 through C104 | | (see page 22-12) |
| Right engine compartment wire harness | G201 | C201 through C204 | | (see page 22-14) |
| Left engine compartment wire harness | C351<br>G301 through G303 | C301 through C303<br>C351 | | (see page 22-16) |
| Dashboard wire harness B (left branch) | | C301, C302, C401 through C404<br>G401 | | (see page 22-18) |
| Dashboard wire harness B (right branch) | | C201 through C203<br>C451 and C452<br>G402 | | (see page 22-18) |
| Dashboard wire harness A | | C101 through C104<br>C204, C303 and C402 through C404, C451<br>C501 through C504<br>G501 and G502 | | (see page 22-22) |
| Rear wire harness (left branch) | | | C401, C501, C601, C602<br>G601 | (see page 22-24) |
| Rear wire harness (right branch) | | | G602 | (see page 22-24) |
| Roof wire harness | | | C452 | (see page 22-26) |
| Driver's door wire harness | | C502 | | (see page 22-28) |
| Passenger's door wire harness | | C504 | | (see page 22-29) |
| Ignition switch harness | | | | (see page 22-27) |
| SRS main harness | | C503 | G801 | (see page 22-27) |
| Hardtop subharness*1 | | | C601 and C901 | (see page 22-30) |
| Hardtop wire harness*1 | | | C901<br>G901 | (see page 22-30) |
| Rear window defogger ground wire*1 | | | G902 | (see page 22-30) |
| Rear window defogger subharness*2 | | | C602 | (see page 22-31) |

* 1: With hardtop
* 2: '02-03 models

## Connector to Harness Index

### EPS Subharness

| Connector or Terminal | Ref | Cavities | Location | Connects to | Notes |
|---|---|---|---|---|---|
| EPS control unit connector C<br>C351 | 2<br>8 | 2<br>2 | Right side of engine compartment<br>Left side of engine compartment | Left engine compartment wire harness (see page 22-16) | |
| T1<br>T6 | 1<br>7 | | Right side of engine compartment<br>Left side of engine compartment | Main under-hood fuse/relay box<br>Auxiliary under-hood fuse box | |
| G351 | 3 | | Right side of engine compartment | Body ground via EPS subharness | |
| (+) | | | Battery | Battery positive terminal | |

### Battery Ground Cable

| Connector or Terminal | Ref | Cavities | Location | Connects to | Notes |
|---|---|---|---|---|---|
| G1 | 4 | | Right side of engine compartment | Body ground via battery ground cable | |
| (−) | | | Battery | Battery negative terminal | |

### Starter Cable

| Connector or Terminal | Ref | Cavities | Location | Connects to | Notes |
|---|---|---|---|---|---|
| T2<br>T3<br>T7 | 9<br>11<br>6 | | Left side of engine compartment<br>Left side of engine compartment<br>Left side of engine compartment | Starter motor<br>Engine block<br>Auxiliary under-hood fuse box | |
| G3 | 5 | | Left side of engine compartment | Body ground via starter cable | |

### Engine Ground Cable

| Connector or Terminal | Ref | Cavities | Location | Connects to | Notes |
|---|---|---|---|---|---|
| T5 | 10 | | Left side of engine compartment | Engine block | |
| G2 | 12 | | Rear beam | Rear beam ground via engine ground cable | |

### EPS Gearbox Ground Cable

| Connector or Terminal | Ref | Cavities | Location | Connects to | Notes |
|---|---|---|---|---|---|
| T4 | 13 | | Left side of engine compartment | EPS gearbox | |
| G4 | 14 | | Front beam | Front beam via EPS gearbox ground cable | |

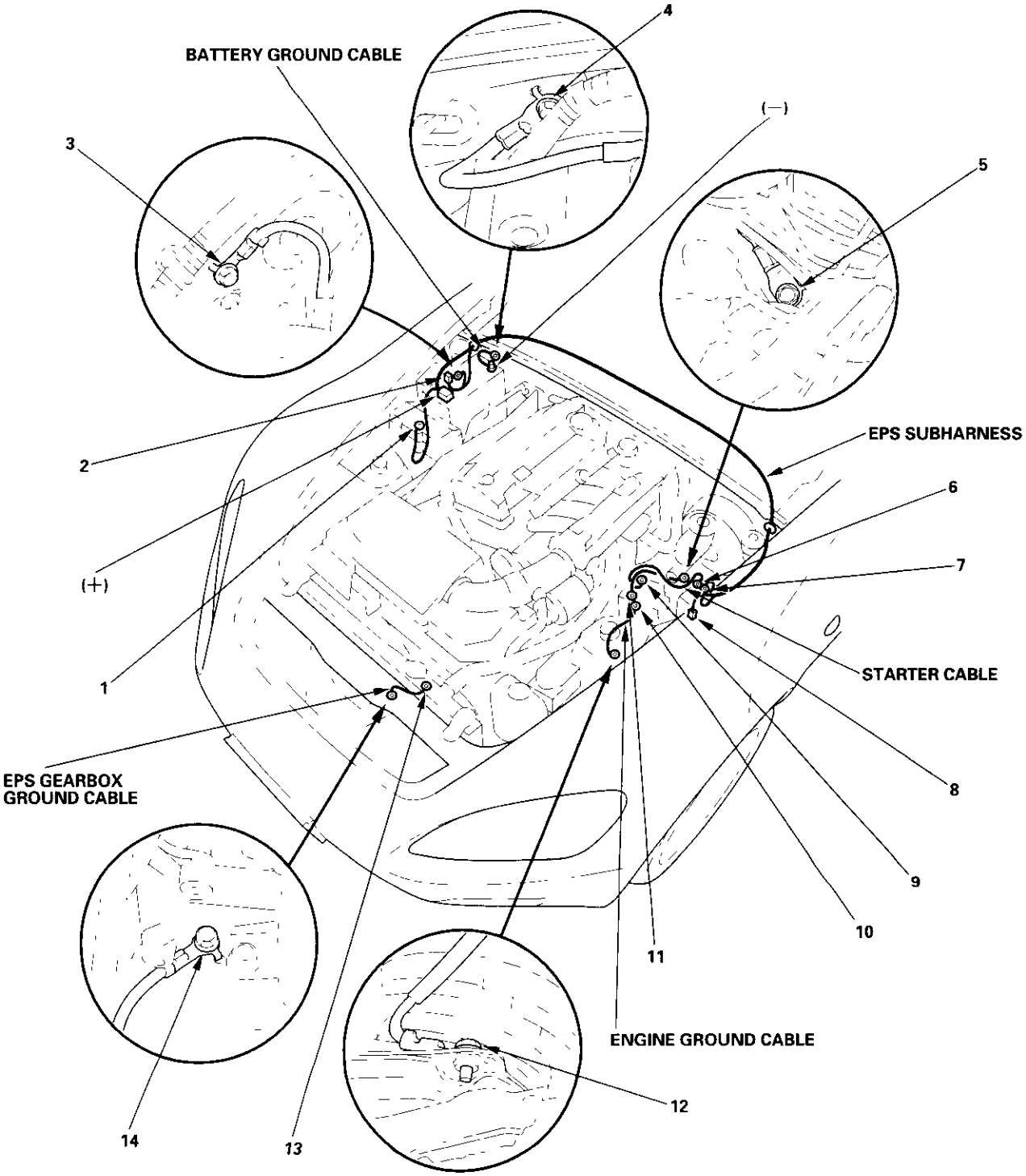
BATTERY GROUND CABLE
4
3
(−)
5
2
EPS SUBHARNESS
6
(+)
7
1
STARTER CABLE
EPS GEARBOX
GROUND CABLE
8
9
10
11
ENGINE GROUND CABLE
12
14
13

## Connector to Harness Index (cont'd)

### Engine Wire Harness

| Connector or Terminal | Ref | Cavities | Location | Connects to | Notes |
|---|---|---|---|---|---|
| A/C compressor clutch | 25 | 1 | Left side of engine compartment | | |
| Alternator | 26 | 4 | Left side of engine compartment | | |
| Back-up light switch | 11 | 2 | Middle of transmission | | |
| CKP sensor | 31 | 3 | Middle of engine | | |
| CMP (TDC) sensor A | 13 | 2 | Middle of engine | | |
| CMP (TDC) sensor B | 6 | 2 | Right side of engine compartment | | |
| ECM connector B | 15 | 25 | Behind left kick panel | | |
| ECM connector C | 16 | 31 | Behind left kick panel | | |
| Engine coolant temperature (ECT) sensor | 34 | 2 | Middle of engine | | |
| Idle air control (IAC) valve | 20 | 3 | Left side of engine compartment | | |
| Intake air temperature (IAT) sensor | 21 | 2 | Left side of engine compartment | | |
| Knock sensor | 28 | 1 | Middle of engine | | |
| Map sensor | 24 | 3 | Left side of engine compartment | | |
| No. 1 ignition coil | 3 | 3 | Middle of engine | | |
| No. 2 ignition coil | 4 | 3 | Middle of engine | | |
| No. 3 ignition coil | 5 | 3 | Middle of engine | | |
| No. 4 ignition coil | 7 | 3 | Middle of engine | | |
| No. 1 injector | 32 | 2 | Middle of engine | | |
| No. 2 injector | 30 | 2 | Middle of engine | | |
| No. 3 injector | 33 | 2 | Middle of engine | | |
| No. 4 injector | 22 | 2 | Middle of engine | | |
| Primary heated oxygen sensor (PHO2S) | 9 | 4 | Middle of transmission | | |
| Secondary heated oxygen sensor (SHO2S) | 10 | 4 | Middle of transmission | | |
| Starter solenoid | 23 | 1 | Left side of engine compartment | | |
| Throttle position (TP) sensor | 29 | 3 | Left side of engine compartment | | |
| Vehicle speed sensor (VSS) | 12 | 3 | Middle of transmission | | |
| VTEC oil pressure switch | 2 | 2 | Right side of engine compartment | | |
| VTEC solenoid valve | 36 | 1 | Right side of engine compartment | | |
| C101 | 14 | 16 | Behind left kick panel | Dashboard wire harness A (see page 22-22) | |
| C102 (Junction connector) | 18 | 20 | Behind left kick panel | | |
| C103 (Connect to C104) | 19 | 2 | Behind left kick panel | | |
| C104 (Connect to C103) | 17 | 2 | Behind left kick panel | | |
| T101 | 1 | | Main under-hood fuse/relay box | | |
| T102 | 27 | | Alternator | | |
| T103 | 35 | | Engine oil pressure switch | | |
| G101 | 8 | | Middle of engine | Engine ground via engine wire harness | |

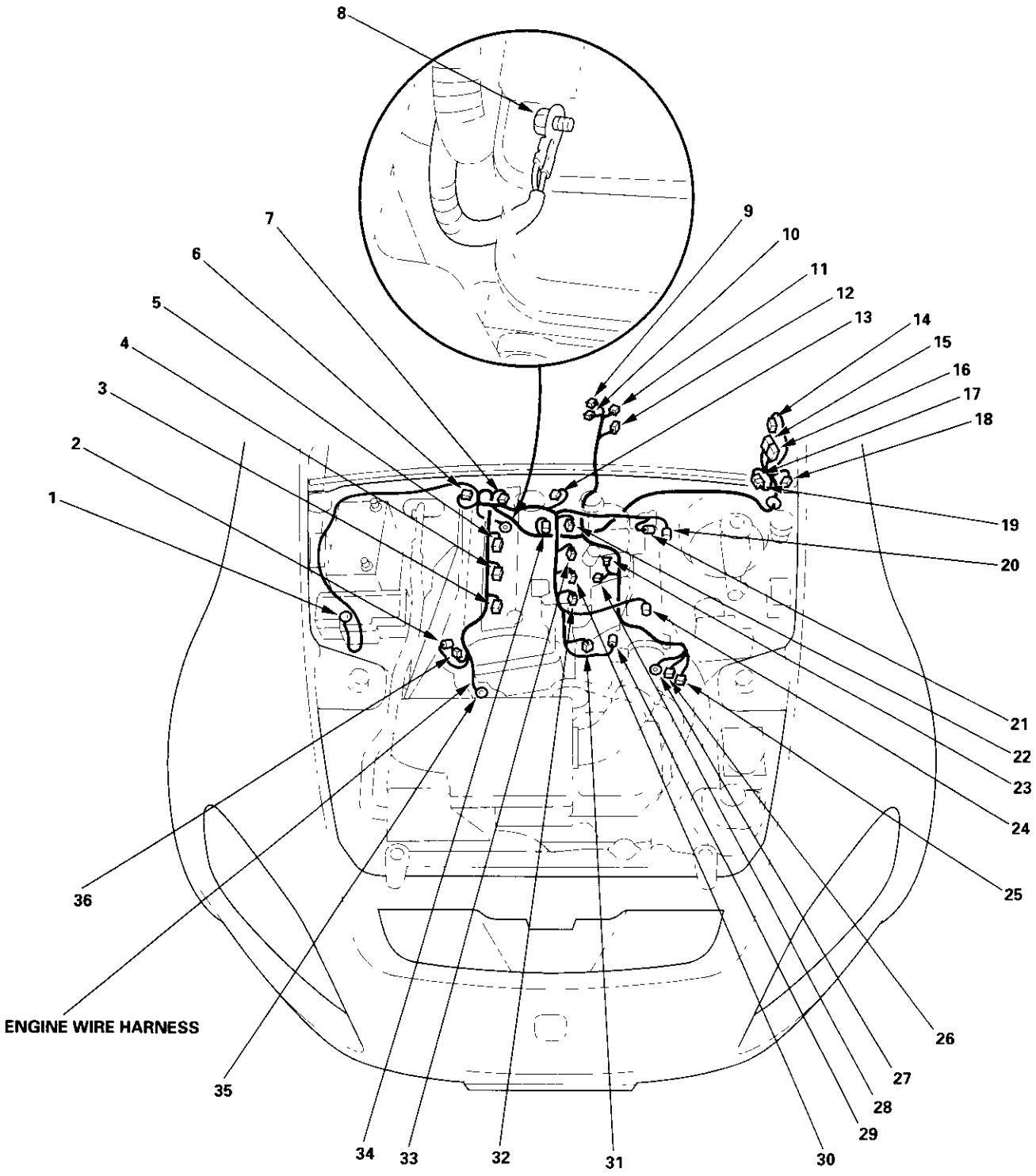
8
7
6
5
4
3
2
1
9
10
11
12
13
14
15
16
17
18
19
20
21
22
23
24
25
26
27
28
29
30
31
32
33
34
35
36
ENGINE WIRE HARNESS

## Connector to Harness Index (cont'd)

### Right Engine Compartment Wire Harness

| Connector or Terminal | Ref | Cavities | Location | Connects to | Notes |
|---|---|---|---|---|---|
| ABS right front wheel sensor | 10 | 2 | Right side of engine compartment | | |
| A/C pressure switch | 4 | 2 | Middle of engine compartment | | |
| Condenser fan motor | 1 | 2 | Left side of engine compartment | | |
| ELD unit (see page 22-32) | 13 | 3 | Under-hood fuse/relay box | | |
| EPS control unit connector A | 14 | 2 | Right side of engine compartment | | |
| EPS control unit connector B | 16 | 14 | Right side of engine compartment | | |
| EPS torque sensor | 2 | 3 | Left side of engine compartment | | |
| EPS motor | 3 | 2 | Left side of engine compartment | | |
| Horn (low) | 5 | 1 | Middle of engine compartment | | |
| Horn (high) | 26 | 1 | Right side of engine compartment | | '02-03 models |
| Main under-hood fuse/relay box connector A (see page 22-32) | 25 | 18 | Right side of engine compartment | | |
| Main under-hood fuse/relay box connector B (see page 22-32) | 24 | 7 | Right side of engine compartment | | |
| Main under-hood fuse/relay box connector C (see page 22-32) | 23 | 3 | Right side of engine compartment | | |
| Main under-hood fuse/relay box connector D (see page 22-32) | 22 | 16 | Right side of engine compartment | | |
| Radiator fan motor | 6 | 2 | Right side of engine compartment | | |
| Right front parking light | 11 | 2 | Behind right headlight | | |
| Right front turn signal light | 12 | 2 | Behind right headlight | | |
| Right headlight (high beam) | 8 | 3 | Behind right headlight | | |
| Right headlight (low beam) | 9 | 2 | Behind right headlight | | |
| Right side turn signal light | 17 | 2 | Right side of engine compartment | | |
| Windshield washer motor | 15 | 2 | Right side of engine compartment | | |
| C201 | 20 | 16 | Behind right side of dash | Dashboard wire harness B (see page 22-18) | |
| C202 | 21 | 6 | Behind right side of dash | Dashboard wire harness B (see page 22-18) | |
| C203 | 19 | 7 | Behind right side of dash | Dashboard wire harness B (see page 22-18) | |
| C204 | 18 | 18 | Behind right side of dash | Dashboard wire harness A (see page 22-22) | |
| G201 | 7 | | Right side of engine compartment | Body ground via right engine compartment wire harness | |

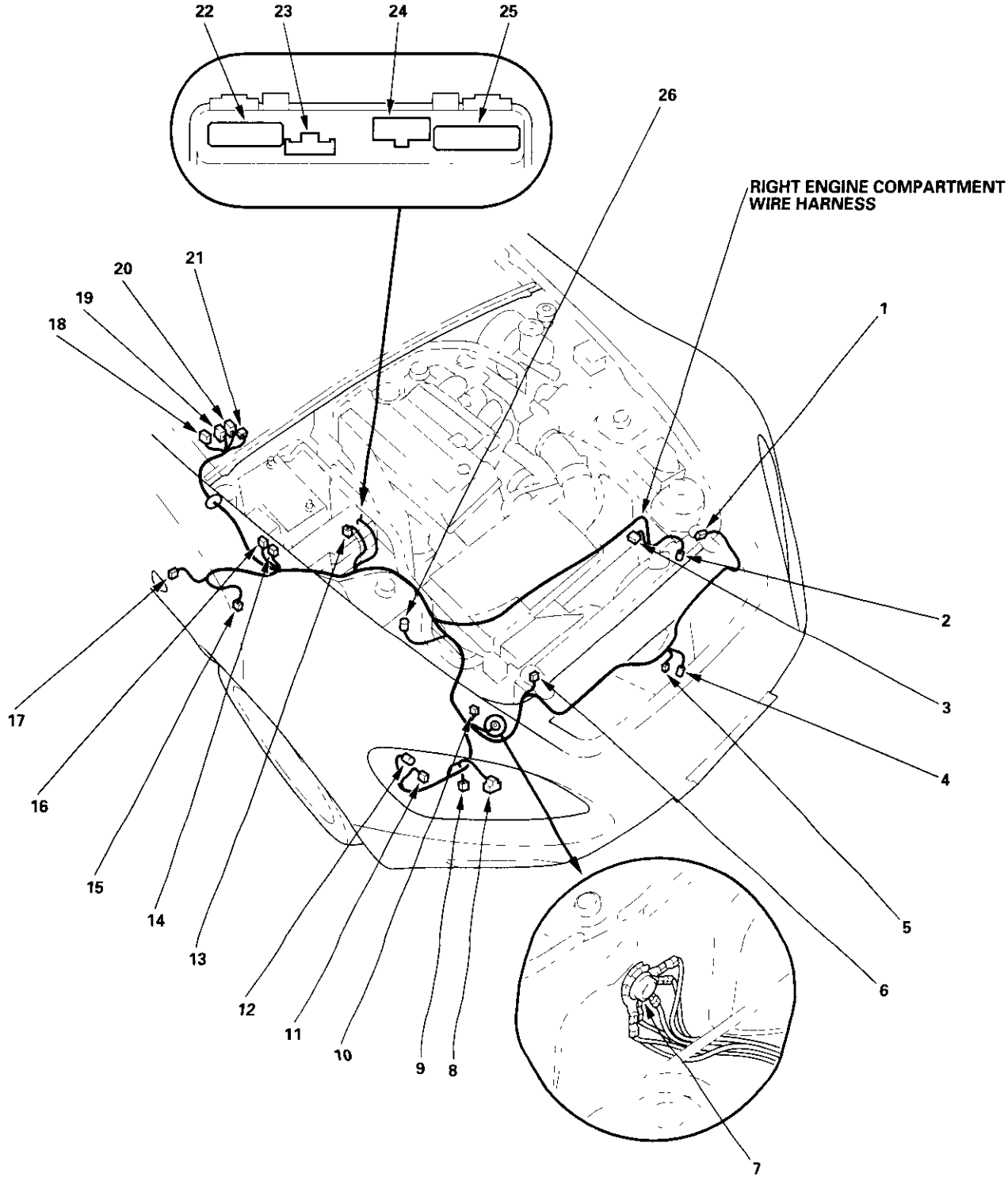
RIGHT ENGINE COMPARTMENT
WIRE HARNESS
1
2
3
4
5
6
7
8
9
10
11
12
13
14
15
16
17
18
19
20
21
22
23
24
25
26

## Connector to Harness Index (cont'd)

### Left Engine Compartment Wire Harness

| Connector or Terminal | Ref | Cavities | Location | Connects to | Notes |
|---|---|---|---|---|---|
| ABS left front wheel sensor | 10 | 2 | Left side of engine compartment | | |
| ABS modulator unit | 26 | 25 | Left side of engine compartment | | |
| Air pump electric current sensor connector A | 14 | 2 | Left side of engine compartment | | |
| Air pump electric current sensor connector B | 15 | 3 | Left side of engine compartment | | |
| Air pump | 5 | 2 | Left side of engine compartment | | |
| Air pump relay connector A | 7 | 2 | Left side of engine compartment | | |
| Air pump relay connector B | 4 | 2 | Left side of engine compartment | | |
| Auxiliary under-hood fuse box connector A (see page 22-34) | 24 | 2 | Auxiliary under-hood fuse box | | |
| Auxiliary under-hood fuse box connector B (see page 22-34) | 12 | 3 | Auxiliary under-hood fuse box | | |
| Brake fluid level switch | 19 | 2 | Left side of engine compartment | | |
| Cruise control actuator | 28 | 4 | Left side of engine compartment | | |
| EVAP canister purge valve | 27 | 2 | Left side of engine compartment | | |
| Intermittent wiper relay | 17 | 6 | Left side of engine compartment | | '02-03 models |
| Left front parking light | 9 | 2 | Behind left headlight | | |
| Left front turn signal light | 11 | 2 | Behind left headlight | | |
| Left headlight (high beam) | 6 | 3 | Behind left headlight | | |
| Left headlight (low beam) | 8 | 2 | Behind left headlight | | |
| Left side turn signal light | 16 | 2 | Left side of engine compartment | | |
| Radiator fan switch | 1 | 2 | Left side of engine compartment | | |
| Secondary air control valve vacuum control solenoid valve | 29 | 2 | Left side of engine compartment | | |
| Test tachometer connector | 18 | 2 | Left side of engine compartment | | |
| Windshield wiper motor | 23 | 5 | Left side of engine compartment | | |
| C301 | 20 | 14 | Under left side of dash | Dashboard wire harness B (see page 22-18) | |
| C302 | 22 | 16 | Under left side of dash | Dashboard wire harness B (see page 22-18) | |
| C303 | 21 | 14 | Under left side of dash | Dashboard wire harness A (see page 22-22) | |
| C351 | 25 | 2 | Left side of engine compartment | EPS subharness (see page 22-10) | |
| G301 | 2 | | Left side of engine compartment | Body ground via left engine compartment wire harness | |
| G302 | 3 | | Left side of engine compartment | Body ground via left engine compartment wire harness | |
| G303 | 13 | | Left side of engine compartment | Body ground via left engine compartment wire harness | |

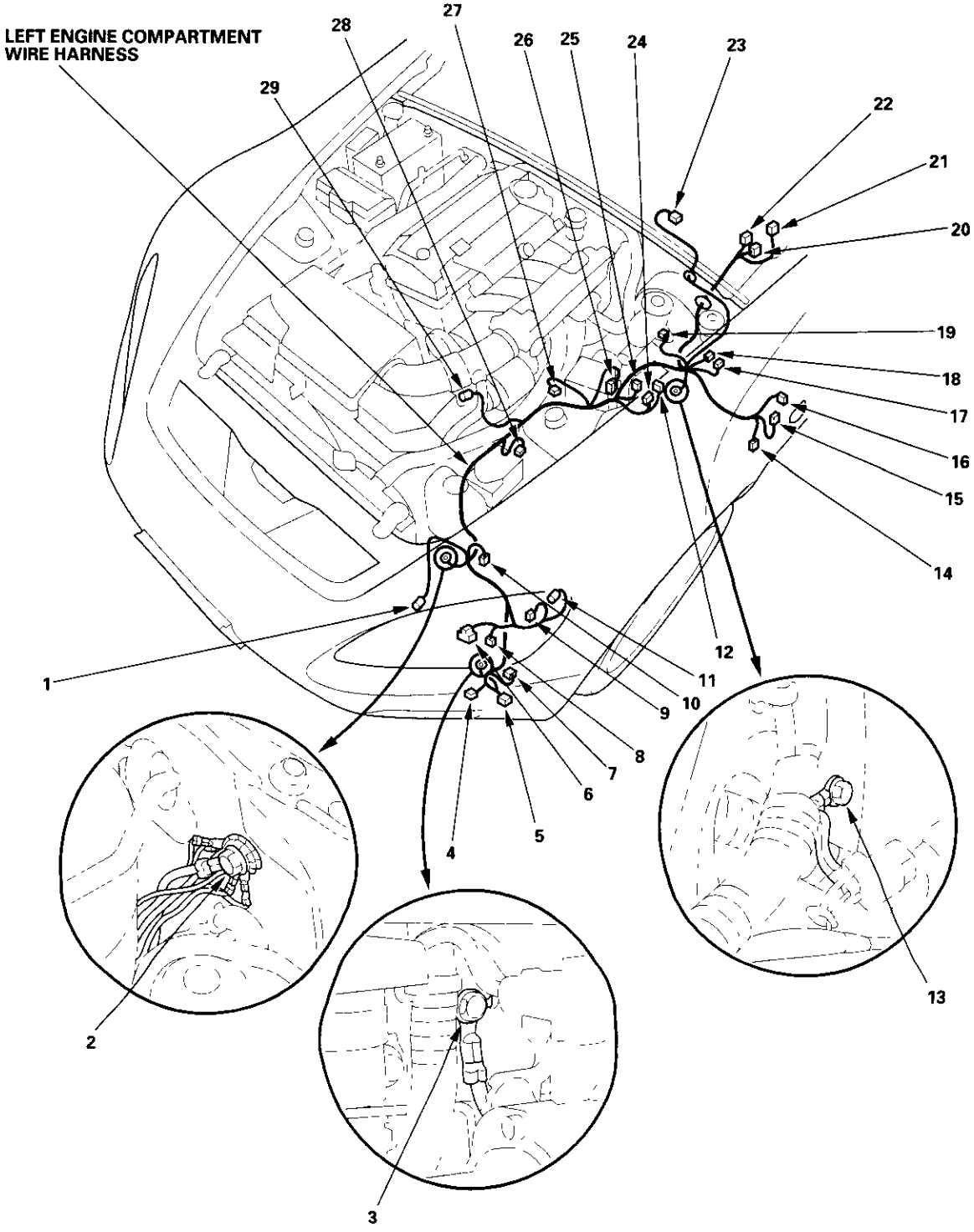
LEFT ENGINE COMPARTMENT
WIRE HARNESS
1
2
3
4
5
6
7
8
9
10
11
12
13
14
15
16
17
18
19
20
21
22
23
24
25
26
27
28
29

## Connector to Harness Index (cont'd)

**Dashboard Wire Harness B (Left branch)**

| Connector or Terminal | Ref | Cavities | Location | Connects to | Notes |
|---|---|---|---|---|---|
| Brake pedal position switch | 13 | 4 | Under left side of dash | | |
| Cable reel | 18 | 4 | Under left side of dash | | |
| Clutch pedal position switch | 8 | 2 | Under left side of dash | | |
| Clutch interlock switch | 10 | 2 | Under left side of dash | | |
| Combination light switch | 17 | 16 | Under left side of dash | | |
| Cruise control unit | 9 | 14 | Under left side of dash | | |
| High beam cut relay | 6 | 4 | Under left side of dash | | Canada |
| Ignition key switch | 3 | 7 | Under left side of dash | | |
| Intermittent wiper relay | 7 | 4 | Under left side of dash | | '00-01 models |
| Immobilizer receiver unit | 2 | 5 | Under left side of dash | | |
| Rear window defogger relay | 7 | 5 | Under left side of dash | | '02-03 models |
| Windshield wiper/washer switch | 1 | 14 | Under left side of dash | | |
| C301 | 11 | 14 | Under left side of dash | Left engine compartment wire harness (see page 22-16) | |
| C302 | 12 | 16 | Under left side of dash | Left engine compartment wire harness (see page 22-16) | |
| C401 | 4 | 22 | Behind left kick panel | Rear wire harness (see page 22-24) | |
| C402 | 16 | 4 | Under left side of dash | Dashboard wire harness A (see page 22-22) | '00-01 models |
| C402 | 16 | 6 | Under left side of dash | Dashboard wire harness A (see page 22-22) | '02-03 models |
| C403 | 15 | 16 | Under left side of dash | Dashboard wire harness A (see page 22-22) | |
| C404 | 14 | 24 | Under left side of dash | Dashboard wire harness A (see page 22-22) | |
| G401 | 5 | | Under left side of dash | Body ground via dashboard wire harness B | |

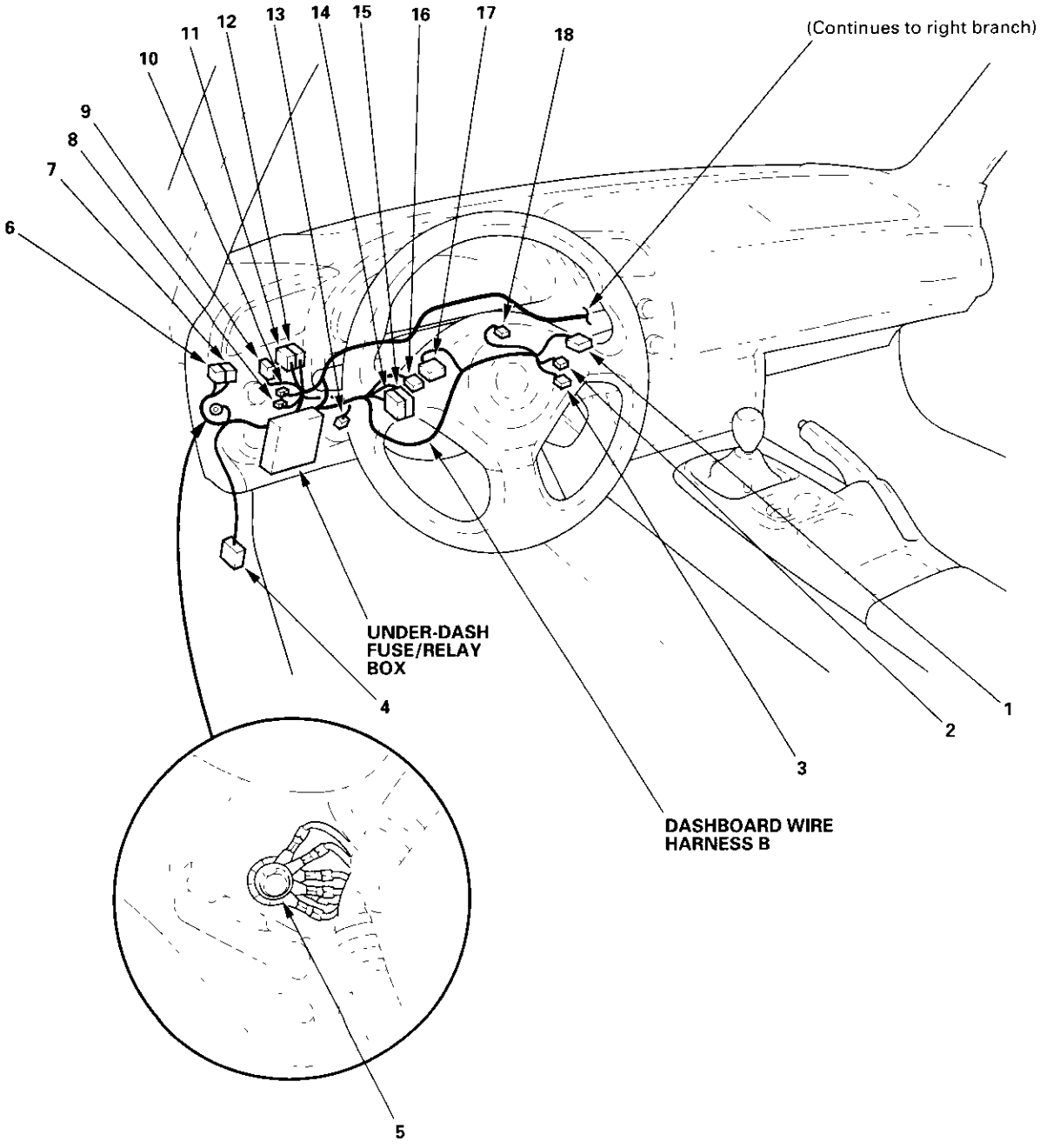
(Continues to right branch)
UNDER-DASH FUSE/RELAY BOX
DASHBOARD WIRE HARNESS B
1
2
3
4
5
6
7
8
9
10
11
12
13
14
15
16
17
18

(cont'd)

## Connector to Harness Index (cont'd)

**Dashboard Wire Harness B (Right branch)**

| Connector or Terminal | Ref | Cavities | Location | Connects to | Notes |
|---|---|---|---|---|---|
| Accessory power socket relay | 2 | 5 | Under middle of dash | | |
| Air mix control motor | 8 | 7 | Under middle of dash | | |
| Blower motor | 12 | 2 | Under right side of dash | | |
| Convertible top motor emergency connector A | 19 | 2 | Under right side of dash | | |
| Convertible top motor emergency connector B | 20 | 2 | Under right side of dash | | |
| Convertible top control unit connector A | 11 | 14 | Under right side of dash | | |
| Convertible top switch | 25 | 6 | Middle of floor between seats | | |
| Daytime running lights control unit | 5 | 14 | Under middle of dash | | Canada |
| Data link connector (DLC) | 7 | 16 | Under middle of dash | | '00-01 models |
| Data link connector (DLC) | 26 | 16 | Under middle of dash | | '02-03 models |
| Diode (DRL) | 4 | 2 | Under middle of dash | | Canada |
| Evaporator temperature sensor | 9 | 2 | Under right side of dash | | |
| Hazard warning switch | 23 | 10 | Middle of floor between seats | | |
| IG 2 relay | 1 | 5 | Under middle of dash | | |
| Mode control motor | 6 | 7 | Under middle of dash | | |
| Parking brake switch | 22 | 1 | Middle of floor between seats | | |
| PGM-FI main relay | 3 | 7 | Under middle of dash | | |
| Power transistor | 10 | 5 | Under right side of dash | | |
| Rear window defogger switch connector | 24 | 5 | Middle of floor between seats | | Hardtop * |
| Recirculation control motor | 13 | 7 | Under right side of dash | | |
| C201 | 15 | 16 | Under right side of dash | Right engine compartment wire harness (see page 22-14) | |
| C202 | 21 | 6 | Under right side of dash | Right engine compartment wire harness (see page 22-14) | |
| C203 | 14 | 7 | Under right side of dash | Right engine compartment wire harness (see page 22-14) | |
| C451 | 16 | 16 | Under right side of dash | Dashboard wire harness A (see page 22-22) | |
| C452 | 18 | 2 | Under right side of dash | Roof wire harness (see page 22-26) | |
| G402 | 17 | | | Body ground via dashboard wire harness B | |

* : '00-01 models

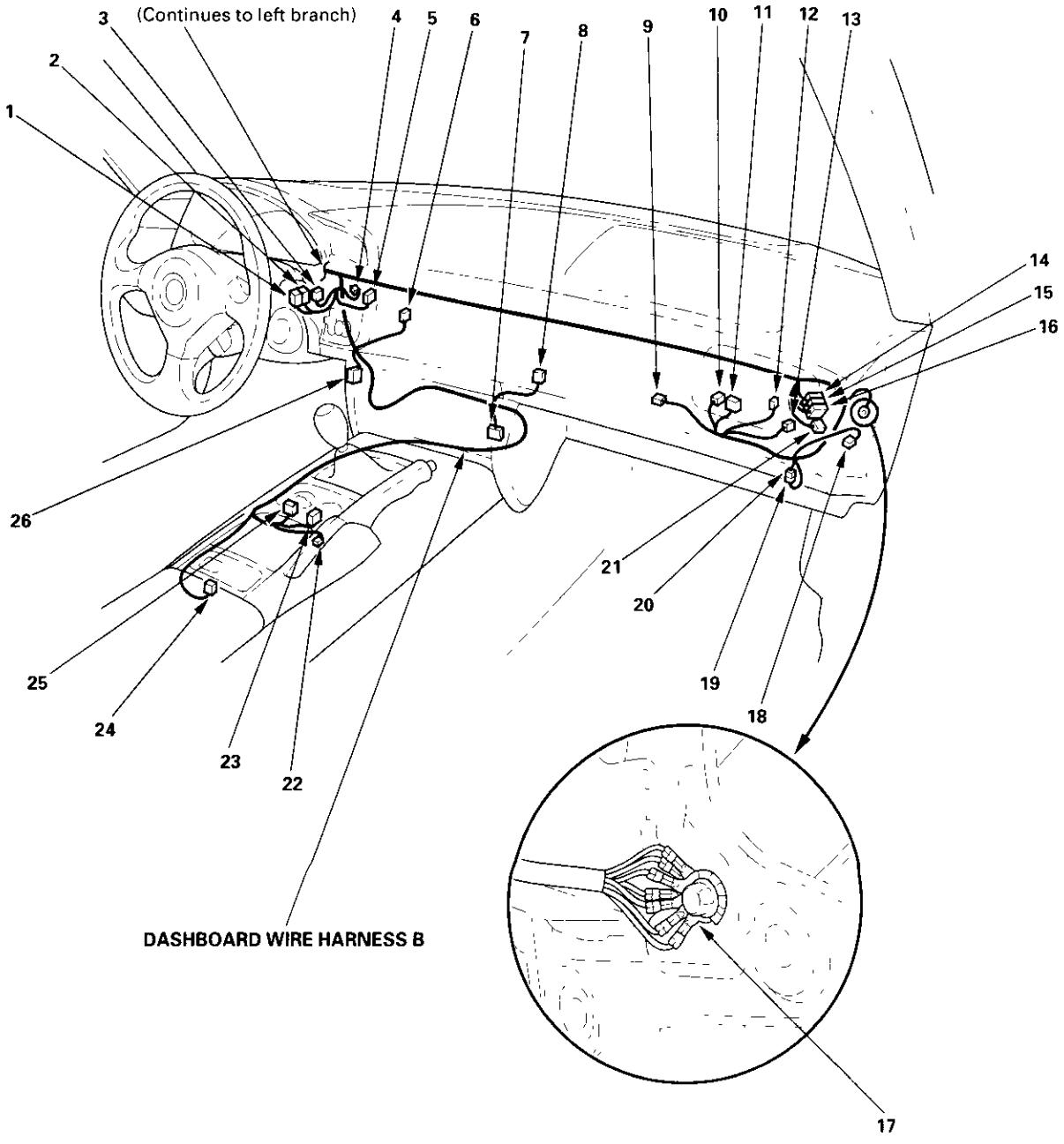
(Continues to left branch)
1
2
3
4
5
6
7
8
9
10
11
12
13
14
15
16
17
18
19
20
21
22
23
24
25
26
DASHBOARD WIRE HARNESS B

## Connector to Harness Index (cont'd)

### Dashboard Wire Harness A

| Connector or Terminal | Ref | Cavities | Location | Connects to | Notes |
|---|---|---|---|---|---|
| Antenna amplifier | 17 | 2 | Behind audio unit | | |
| Audio unit | 16 | 20 | Behind audio unit | | |
| Convertible top control unit connector B | 18 | 10 | Under right side of dash | | |
| Cruise control main switch | 8 | 6 | Under left side of dash | | |
| ECM connector A | 7 | 32 | Behind left kick panel | | |
| Engine start switch | 4 | 5 | Under left side of dash | | |
| Gauge assembly connector A | 14 | 14 | Behind gauge assembly | | |
| Gauge assembly connector B | 13 | 12 | Behind gauge assembly | | |
| Gauge assembly connector C | 12 | 20 | Behind gauge assembly | | |
| Gauge assembly connector D | 11 | 16 | Behind gauge assembly | | |
| Heater control panel | 15 | 30 | Under middle of dash | | |
| Keyless door lock control unit | 5 | 18 | Under left side of dash | | |
| Radio remote switch | 6 | 6 | Under left side of dash | | |
| Rear window defogger switch | 22 | 6 | Under middle of dash | | '02-03 models |
| C101 | 3 | 16 | Behind left kick panel | Engine wire harness (see page 22-12) | |
| C204 | 20 | 18 | Under left side of dash | Right engine compartment wire harness (see page 22-14) | |
| C303 | 23 | 14 | Under left side of dash | Left engine compartment wire harness (see page 22-16) | |
| C402 | 24 | 4 | Under left side of dash | Dashboard wire harness B (see page 22-18) | '00-01 models |
| C402 | 24 | 6 | Under left side of dash | Dashboard wire harness B (see page 22-18) | '02-03 models |
| C403 | 9 | 16 | Under left side of dash | Dashboard wire harness B (see page 22-18) | |
| C404 | 10 | 24 | Under left side of dash | Dashboard wire harness B (see page 22-18) | |
| C451 | 19 | 16 | Under right side of dash | Dashboard wire harness B (see page 22-18) | |
| C501 | 1 | 12 | Behind left kick panel | Rear wire harness (see page 22-24) | '00-01 models |
| C501 | 1 | 14 | Behind left kick panel | Rear wire harness (see page 22-24) | '02-03 models |
| C502 | 2 | 18 | Behind left kick panel | Driver's door wire harness (see page 22-28) | |
| C503 | 25 | 3 | Under left side of dash | SRS main harness (see page 22-27) | |
| C504 | 21 | 14 | Behind right kick panel | Passenger's door wire harness (see page 22-29) | |
| G501 | 26 | | | Body ground via dashboard wire harness A | |
| G502 | 22 | | | Body ground via dashboard wire harness A | |

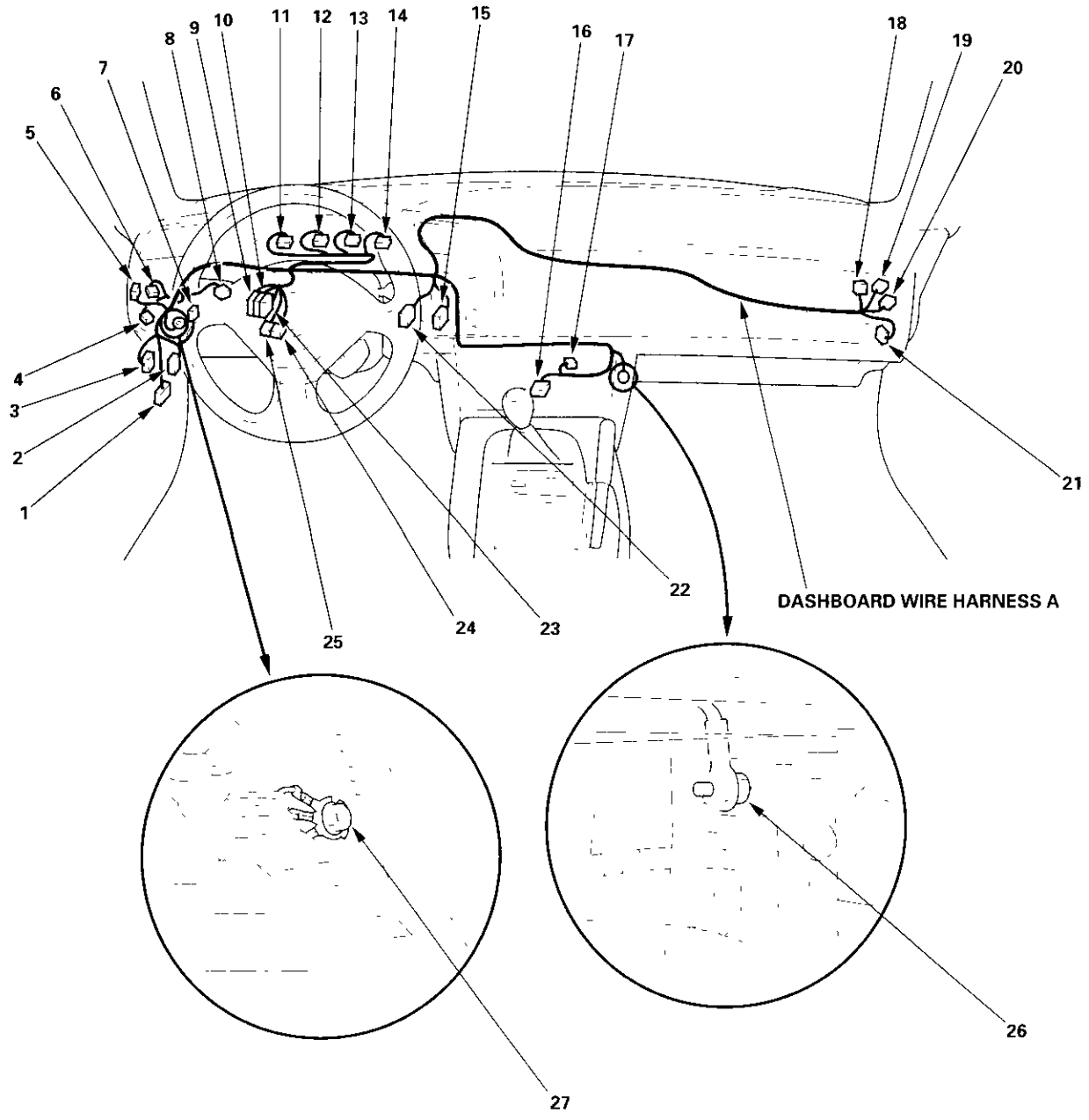
1
2
3
4
5
6
7
8
9
10
11
12
13
14
15
16
17
18
19
20
21
22
23
24
25
26
27
DASHBOARD WIRE HARNESS A

## Connector to Harness Index (cont'd)

**Rear Wire Harness (Left branch)**

| Connector or Terminal | Ref | Cavities | Location | Connects to | Notes |
|---|---|---|---|---|---|
| ABS left rear wheel sensor | 7 | 2 | Left side of trunk | | |
| Condenser | 11 | 2 | Left side of trunk | | '02-03 models |
| Diode | 12 | 2 | Left side of trunk | | '02-03 models |
| Driver's door switch | 4 | 1 | Behind left corner gusset | | |
| Driver's seat belt switch | 3 | 2 | Under driver's seat | | |
| EVAP bypass solenoid valve | 9 | 2 | Left side of under floor | | |
| EVAP control canister vent shut valve | 10 | 2 | Left side of under floor | | |
| Fuel pump/fuel gauge sending unit | 23 | 5 | Middle of fuel tank | | |
| Fuel tank pressure sensor | 8 | 3 | Left side of under floor | | |
| High mount brake light | 20 | 2 | Middle of trunk lid | | |
| Left convertible top motor | 5 | 2 | Behind left corner gusset | | |
| Left back-up light | 17 | 2 | Behind left taillight assembly | | |
| Left brake/taillight | 16 | 3 | Behind left taillight assembly | | |
| Left rear side marker light | 15 | 2 | Behind left taillight assembly | | |
| Left rear turn signal light | 18 | 2 | Behind left taillight assembly | | |
| Rear window defogger change relay | 13 | 5 | Left side of trunk | | '02-03 models |
| Trunk light | 21 | 2 | Middle of trunk | | |
| Trunk opener switch | 24 | 2 | Behind rear console between seat-back | | |
| Trunk opener solenoid/latch switch | 19 | 3 | Middle of trunk lid | | |
| C401 | 1 | 22 | Behind left kick panel | Dashboard wire harness B (see page 22-18) | |
| C501 | 2 | 12 | Behind left kick panel | Dashboard wire harness A (see page 22-22) | '00-01 models |
| C501 | 2 | 14 | Behind left kick panel | Dashboard wire harness A | '02-03 models |
| C601 | 6 | 4 | Left side of trunk | Hardtop subharness (see page 22-30) | Hardtop |
| C602 | 14 | 2 | Left side of trunk | Rear window defogger subharness (see page 22-31) | '02-03 models |
| G601 | 22 | | | Body ground via rear wire harness | |

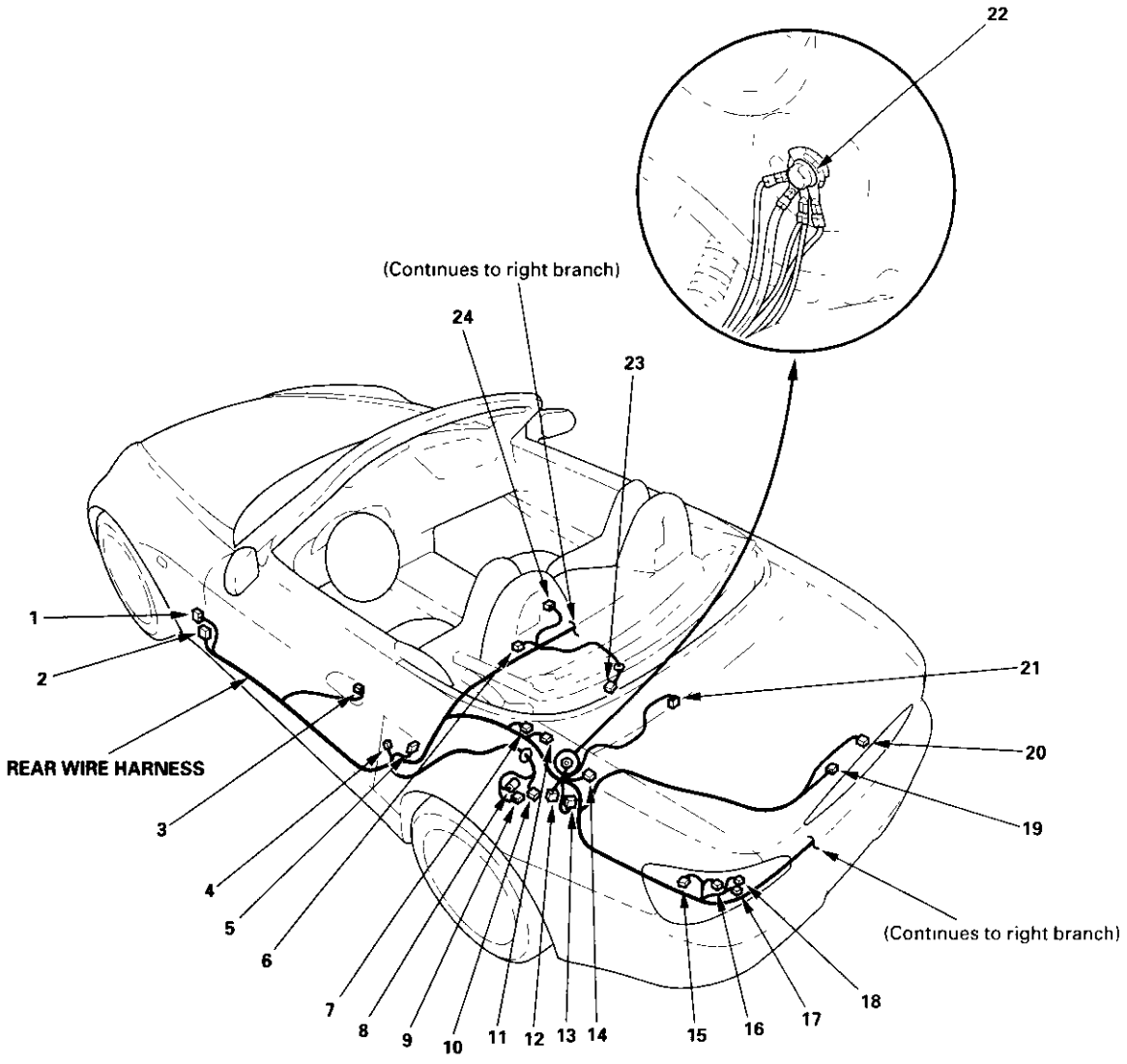
22
(Continues to right branch)
24
23
1
2
REAR WIRE HARNESS
9
3
4
5
6
7
8
9
10
11
12
13
14
15
16
17
18
21
20
19
(Continues to right branch)

(cont'd)

## Connector to Harness Index (cont'd)

### Rear Wire Harness (Right branch)

| Connector or Terminal | Ref | Cavities | Location | Connects to | Notes |
|---|---|---|---|---|---|
| ABS right rear wheel sensor | 4 | 2 | Right side of trunk | | |
| Accessory power socket | 3 | 2 | Behind rear console between seat-back | | |
| License plate light | 9 | 2 | Behind rear bumper | | |
| Passenger's door switch | 1 | 1 | Behind right corner gusset | | |
| Right convertible top motor | 2 | 2 | Behind right corner gusset | | |
| Right back-up light | 7 | 2 | Behind right taillight | | |
| Right brake/taillight | 6 | 3 | Behind right taillight | | |
| Right rear side marker light | 5 | 2 | Behind right taillight | | |
| Right rear turn signal light | 8 | 2 | Behind right taillight | | |
| G602 | 10 | | | Body ground via rear wire harness | |

### Roof Wire Harness

| Connector or Terminal | Ref | Cavities | Location | Connects to | Notes |
|---|---|---|---|---|---|
| Ceiling/soptlights | 1 | 4 | Roof area | | |
| C452 | 2 | 2 | Under right side of dash | Dashboard wire harness B (see page 22-18) | |

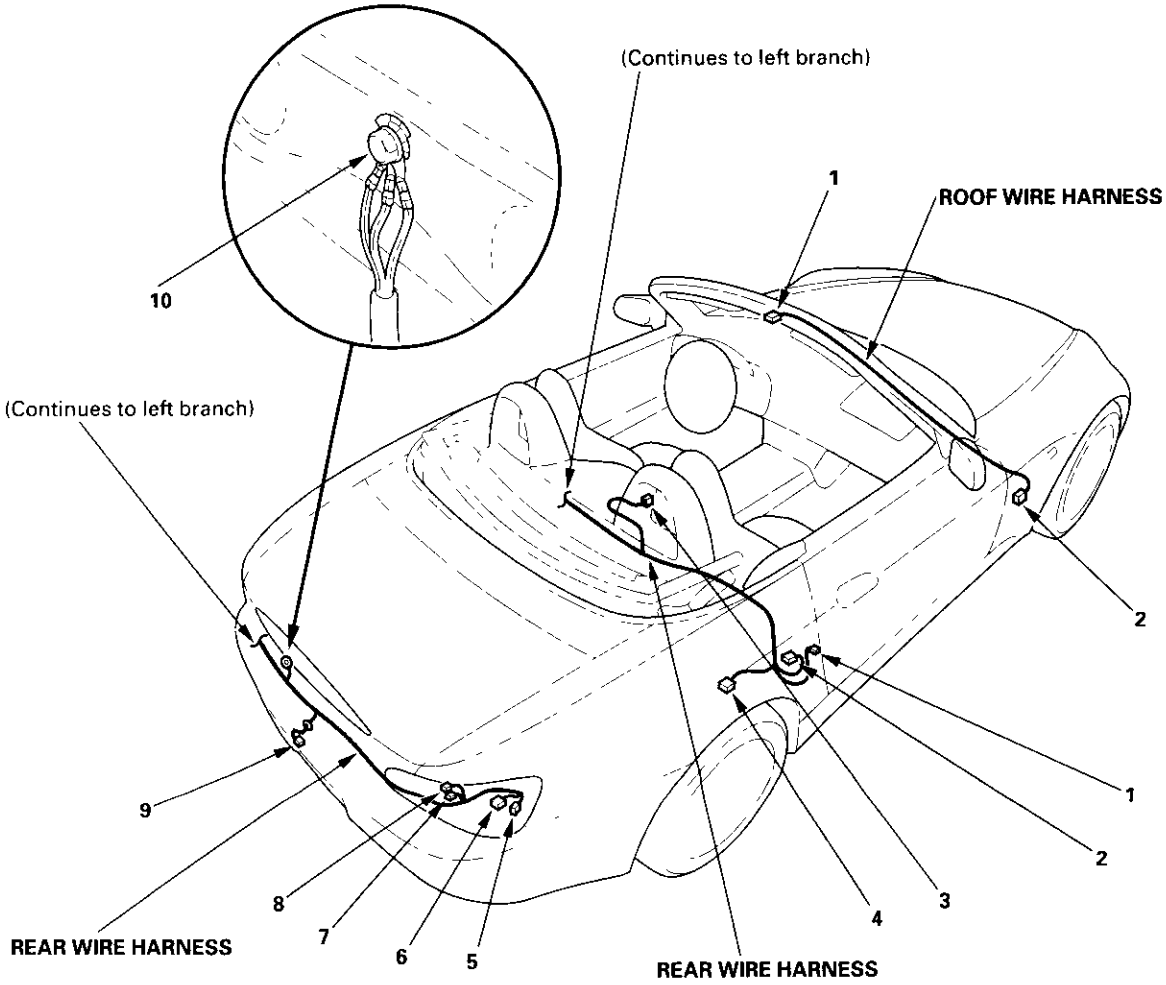

### SRS Main Harness

| Connector or Terminal | Ref | Cavities | Location | Connects to | Notes |
|---|---|---|---|---|---|
| Cable reel | 5 | 2 | Under left side of dash | | |
| Driver's seat belt tensioner | 9 | 2 | Behind driver's seat-back | | |
| Memory erase signal (MES) connector | 1 | 2 | Under-dash fuse/relay box | | |
| Passenger's airbag inflator | 7 | 2 | Under right side of dash | | |
| Passenger's seat belt tensioner | 8 | 2 | Behind passenger's seat-back | | |
| SRS unit | 6 | 18 | Middle of floor | | |
| Under-dash fuse/relay box connector A (see page 22-33) | 2 | 2 | Under-dash fuse/relay box | | |
| C503 | 4 | 3 | Under left side of dash | Dashboard wire harness A (see page 22-22) | |
| G801 | 10 | | Middle of floor | Body ground via SRS main harness | |

### Ignition Switch Lead

| Connector or Terminal | Ref | Cavities | Location | Connects to | Notes |
|---|---|---|---|---|---|
| Under-dash fuse/relay box connector B (see page 22-33) | 3 | 7 | Under left side of dash | | |

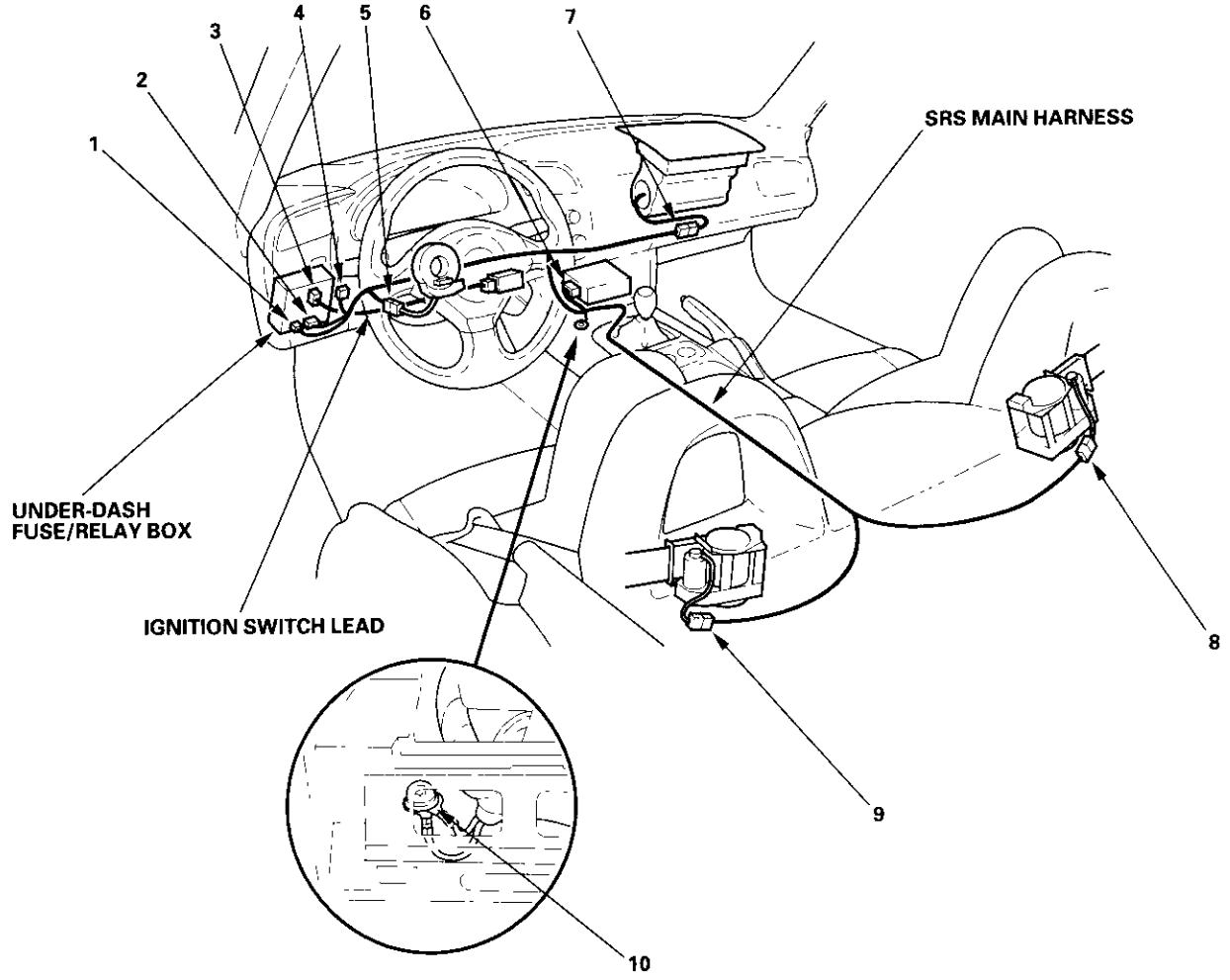

## Connector to Harness Index (cont'd)

### Driver's Door Wire Harness

| Connector or Terminal | Ref | Cavities | Location | Connects to | Notes |
|---|---|---|---|---|---|
| Driver's door key cylinder switch | 7 | 2 | Driver's door | | |
| Driver's door lock actuator | 8 | 2 | Driver's door | | |
| Driver's door lock knob switch | 9 | 3 | Driver's door | | |
| Driver's door speaker | 3 | 2 | Driver's door | | |
| Driver's window motor | 6 | 4 | Driver's door | | |
| Left power mirror actuator | 1 | 3 | Driver's door | | |
| Left tweeter | 10 | 2 | Driver's door | | '02-03 models |
| Power mirror switch | 5 | 10 | Driver's door | | |
| Power window master switch | 4 | 14 | Driver's door | | |
| C502 | 2 | 18 | Behind left kick panel | Dashboard wire harness A (see page 22-22) | |

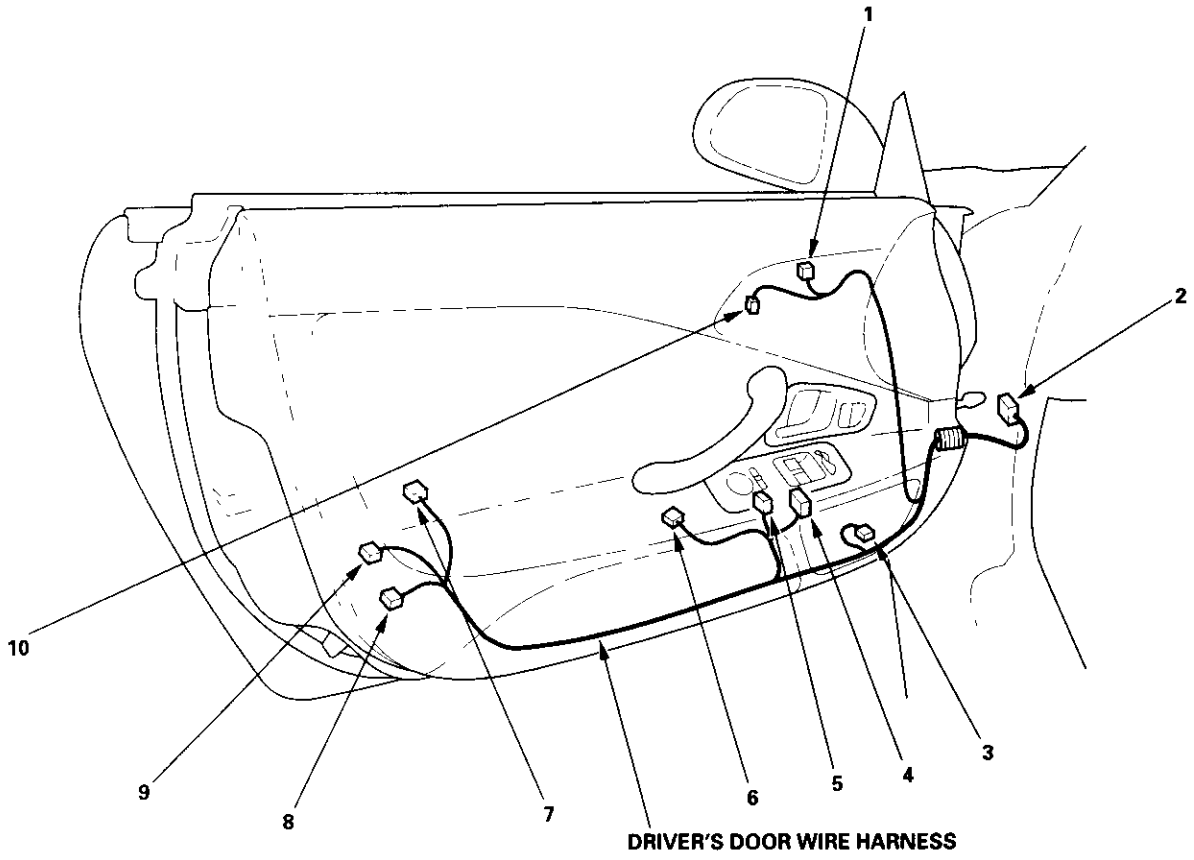


DRIVER'S DOOR WIRE HARNESS

### Passenger's Door Wire Harness

| Connector or Terminal | Ref | Cavities | Location | Connects to | Notes |
|---|---|---|---|---|---|
| Passenger's door lock actuator | 6 | 2 | Passenger's door | | |
| Passenger's door speaker | 3 | 2 | Passenger's door | | |
| Passenger's window motor | 5 | 2 | Passenger's door | | |
| Passenger's window switch | 4 | 6 | Passenger's door | | |
| Right power mirror actuator | 2 | 3 | Passenger's door | | |
| Right tweeter | 7 | 2 | Passenger's door | | '02-03 models |
| C504 | 1 | 14 | Behind right kick panel | Dashboard wire harness A (see page 22-22) | |

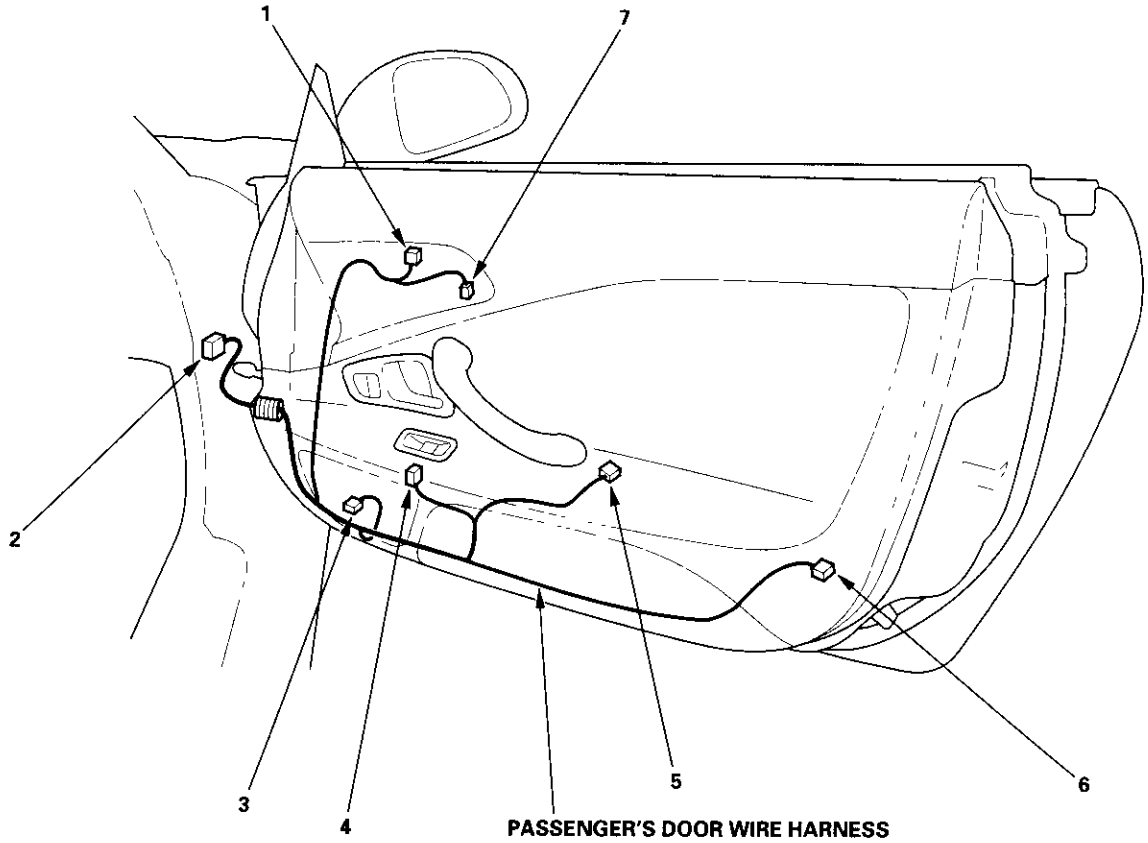


PASSENGER'S DOOR WIRE HARNESS

## Connector to Harness Index (cont'd)

**HARDTOP:**

**Hardtop Subharness**

| Connector or Terminal | Ref | Cavities | Location | Connects to | Notes |
|---|---|---|---|---|---|
| Convertible top disable switch | 5 | 2 | Behind left corner gusset | | |
| C601 | 3 | 4 | Behind left rear side trim | Rear wire harness (see page 22-24) | |
| C901 | 7 | 3 | Behind left rear side trim | Hardtop wire harness | |

**Hardtop Wire Harness**

| Connector or Terminal | Ref | Cavities | Location | Connects to | Notes |
|---|---|---|---|---|---|
| Rear window defogger connector (+) | 4 | 1 | Left side of hardtop | | |
| C901 | 8 | 3 | Left side of hardtop | Hardtop subharness | |
| G901 | 6 | | Left C-pillar | Body ground via hardtop wire harness | |

**Rear Window Defogger Ground Wire**

| Connector or Terminal | Ref | Cavities | Location | Connects to | Notes |
|---|---|---|---|---|---|
| Rear window defogger connector (-) | 2 | 1 | Right side of hardtop | | |
| G902 | 1 | | Right side of hardtop | Body ground via rear window defogger ground wire | |

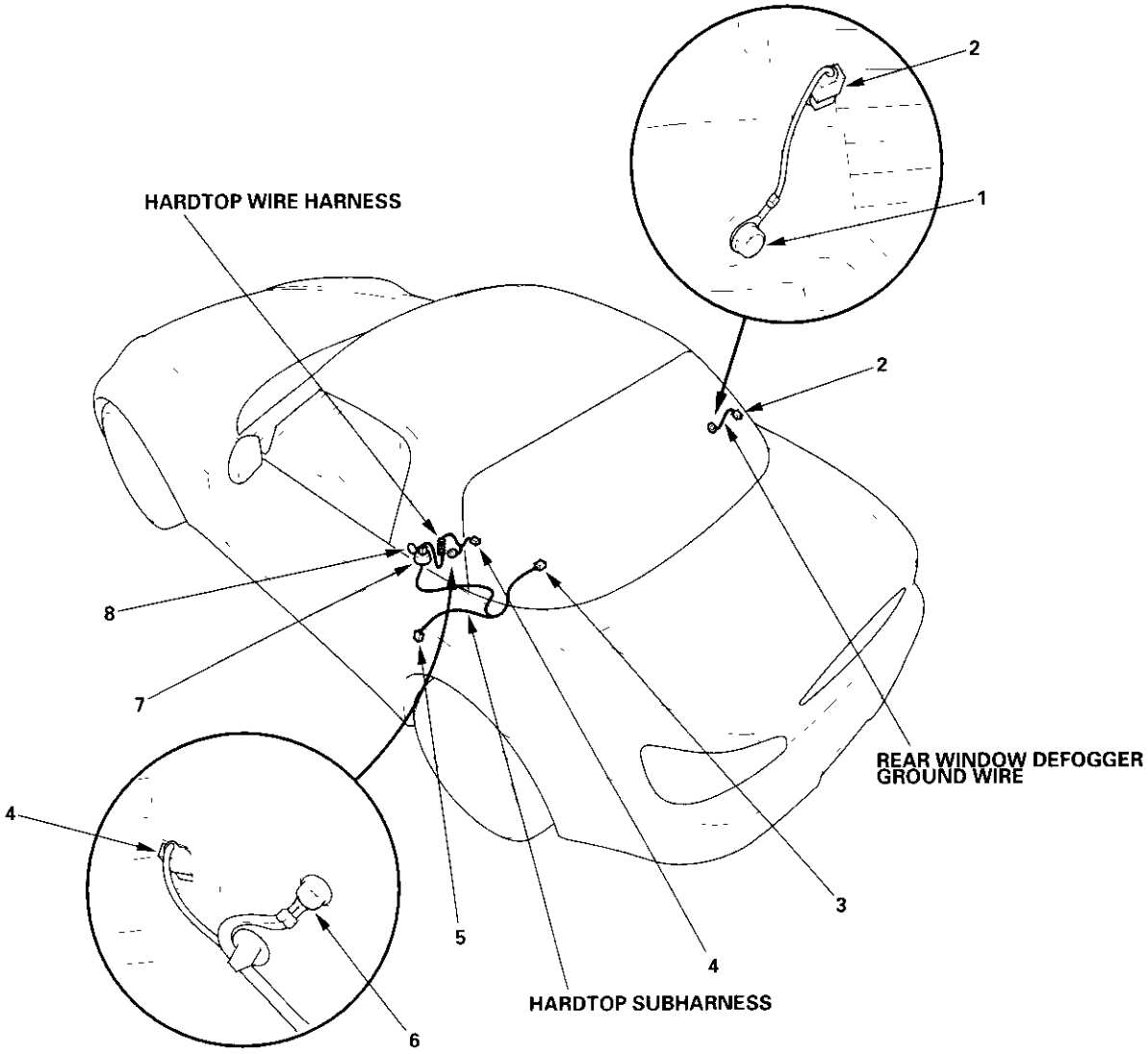

**CONVERTIBLE TOP:**

**Rear Window Defogger Subharness ('02-03 models)**

| Connector or Terminal | Ref | Cavities | Location | Connects to | Notes |
|---|---|---|---|---|---|
| Rear window defogger connector (+) | 1 | 1 | Left side of rear window | | |
| Rear window defogger connector (−) | 2 | 1 | Left side of rear window | | |
| C602 | 3 | 2 | Left side of trunk | Rear wire harness (see page 22-24) | |

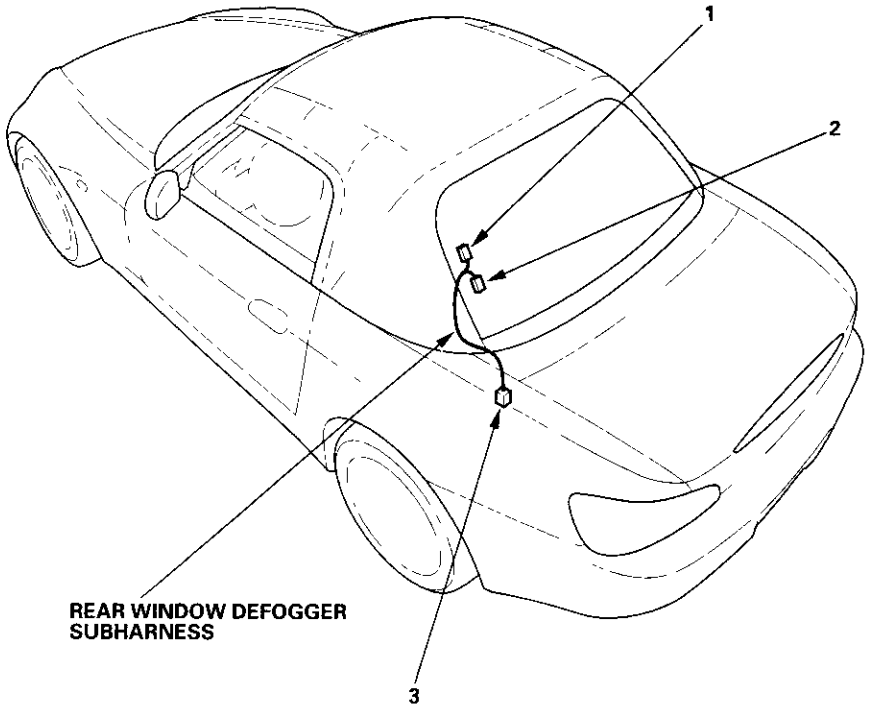

## Connector to Fuse/Relay Box Index

**Main Under-hood Fuse/Relay Box**

| Socket | Ref | Terminal | Connects to |
|---|---|---|---|
| A | 15 | 18 | Right engine compartment wire harness (see page 22-14) |
| A/C compressor clutch relay | 3 | 4 | |
| B | 14 | 7 | Right engine compartment wire harness (see page 22-14) |
| Blower motor relay | 11 | 4 | |
| C | 13 | 3 | Right engine compartment wire harness (see page 22-14) |
| Condenser fan relay | 1 | 4 | |
| D | 12 | 16 | Right engine compartment wire harness (see page 22-14) |
| Diode | 9 | 2 | |
| ELD Unit | 4 | 3 | Right engine compartment wire harness (see page 22-14) |
| Horn relay | 10 | 4 | |
| Headlight relay 1 | 7 | 4 | |
| Headlight relay 2 | 8 | 4 | |
| Radiator fan relay | 2 | 4 | |
| T1 | 6 | | Battery positive cable (see page 22-10) |
| T101 | 5 | | Engine wire harness (see page 22-12) |

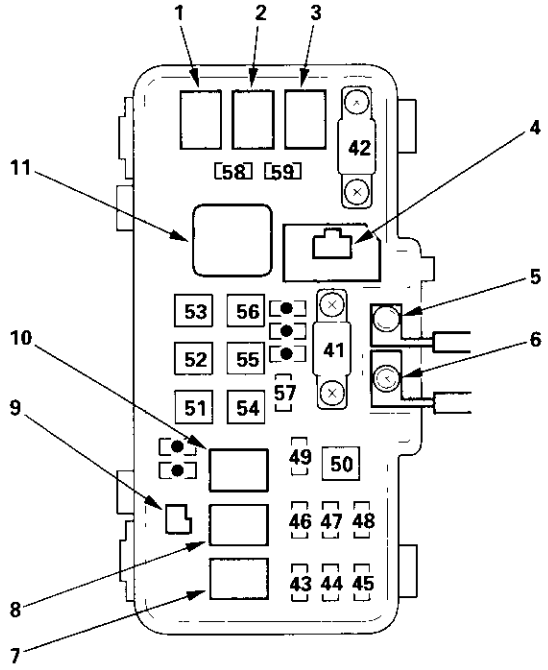


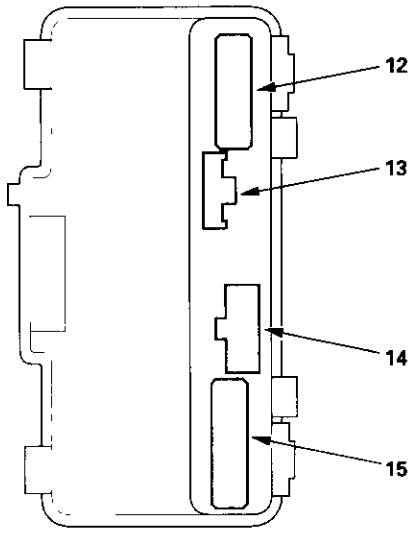

### Under-dash Fuse/Relay Box

| Socket | Ref | Terminal | Connects to |
|---|---|---|---|
| A | 3 | 2 | SRS main harness (see page 22-27) |
| B | 1 | 7 | Ignition switch harness (see page 22-27) |
| C | 7 | 1 | Optional connector |
| D | 8 | 1 | Optional connector |
| E | 9 | 1 | Optional connector |
| Memory erase signal (MES) connector | 5 | 2 | SRS main harness (see page 22-27) |
| Rear window defogger relay ('00-01 models) | 6 | 4 | |
| Starter cut relay | 4 | 4 | |
| Taillight relay | 2 | 4 | |
| Turn signal/hazard relay | 10 | 3 | |

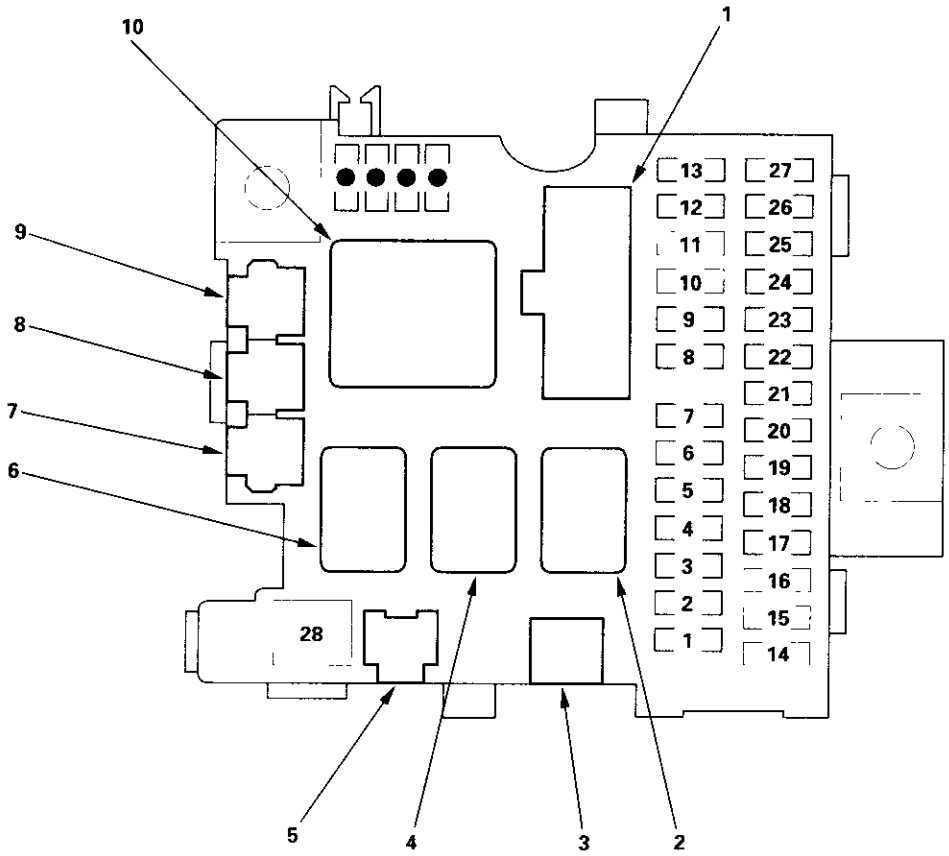

## Connector to Fuse/Relay Box Index (cont'd)

**Auxiliary Under-hood Fuse Box**

| Socket | Ref | Terminal | Connects to |
|---|---|---|---|
| A | 2 | 2 | Left engine compartment wire harness (see page 22-16) |
| B | 1 | 3 | Left engine compartment wire harness (see page 22-16) |

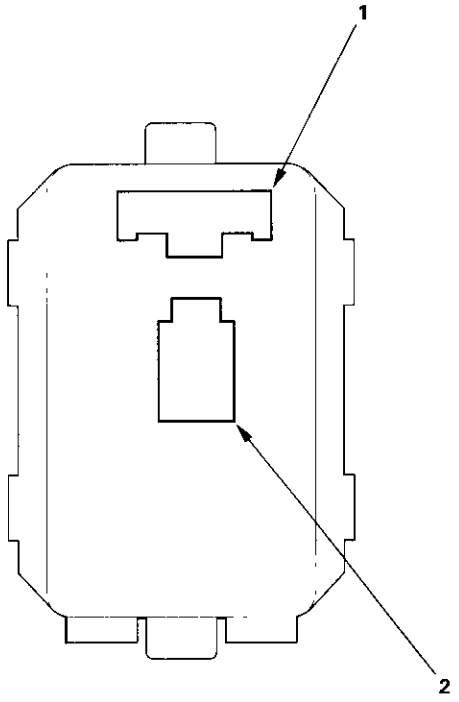

## Fuse to Components Index

**Main Under-hood Fuse/Relay Box**

| Fuse Number | Amps | Wire Color | Component(s) or Circuit(s) Protected |
|---|---|---|---|
| 41 | 100 A | ——— | Battery, Power distribution |
| 42 | 40 A | WHT | Ignition switch (BAT) |
| 43 | 20 A | RED/WHT | Daytime running lights control unit (Canada), Right headlight (high/low beam) |
| 44 | ——— | ——— | Not used |
| 45 | 20 A | RED/YEL | Daytime running lights control unit (Canada), Gauge assembly, High beam indicator light, High beam cut relay (Canada), Left headlight (high/low beam) |
| 46 | 15 A | WHT/GRN | Data link connector (DLC), PGM-FI main relay |
| 47 | 10 A * 1<br>15 A * 2 | WHT/GRN | ABS modulator unit, Brake lights, Cruise control unit, ECM, High mount brake light, Horn(s) |
| 48 | 20 A | WHT/GRN | ABS modulator unit |
| 49 | 10 A | WHT/BLK | Hazard warning lights |
| 50 | 30 A | WHT/BLU | ABS modulator unit |
| 51 | 40 A | WHT/BLK | No. 17 and 18 fuses (in the under-dash fuse/relay box) |
| 52 | 20 A | GRY/RED | Right convertible top motor |
| 53 | ——— | ——— | Not used |
| 54 | 30 A | YEL | No. 22, 23, 24, 25, 26 and 27 fuses (in the under-dash fuse/relay box) |
| 55 | 20 A | GRY | Left convertible top motor |
| 56 | 40 A | BLU/WHT | Blower motor |
| 57 | 20 A | BLU/BLK | Radiator fan motor |
| 58 | 20 A | BLU/YEL | Condenser fan motor |
| | | BLU/RED | A/C compressor clutch |
| 59 | ——— | ——— | Not used |

* 1: '00-01 models
* 2: '02-03 models

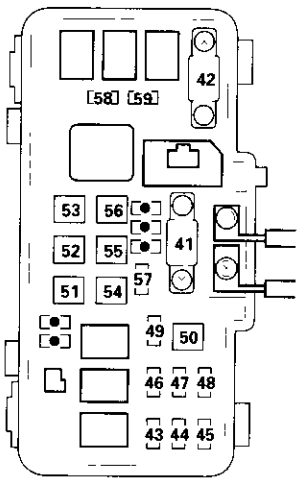


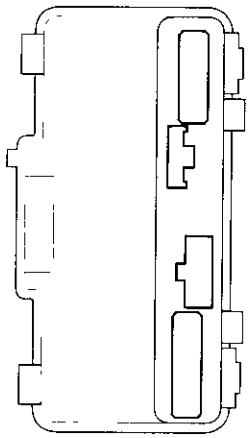

(cont'd)

## Fuse to Components Index (cont'd)

**Under-dash Fuse/Relay Box**

| Fuse Number | Amps | Wire Color | Component(s) or Circuit(s) Protected |
|---|---|---|---|
| 1 | 10 A | GRN or PNK | SRS unit (VA) |
| 2 | 15 A | GRN or BLK/YEL | SRS unit (VB) |
| | | BLK/YEL | Fuel pump, PGM-FI main relay |
| 3 | 7.5 A | BLK/WHT | Engine start switch |
| 4 | 15 A | BLK/YEL | Ignition coils |
| 5 | 7.5 A | YEL | Back-up lights, DRL indicator light (Canada), EPS control unit, Gauge assembly, Keyless door lock control unit, Convertible top control unit |
| 6 | 15 A | BLK/YEL | Air control solenoid valve, Alternator, Charging system light, Cruise control unit, Cruise control main switch, ELD unit, EVAP bypass solenoid valve, EVAP canister vent shut valve, EVAP canister purge valve, Primary and secondary heated oxygen sensors |
| 7 | 7.5 A | RED/BLU | Turn signal/hazard relay |
| 8 | 20 A | GRN/BLK | Power window master switch, Windshield wiper motor, Intermittent wiper relay |
| 9 | 10 A | YEL/RED | Accessory power socket, Audio unit, Radio remote switch |
| 10 | — | — | Not used |
| 11 | — | — | Not used |
| 12 | 15 A | BLK/WHT | Windshield washer motor, Convertible top switch |
| 13 | 7.5 A | BLU/ORN | Intermittent wiper driving circuit (in the gauge assembly) |
| 14 | — | — | Not used |
| 15 | — | — | Not used |
| 16 | — | — | Not used |
| 17 | 20 A | GRN/WHT | Driver's window motor |
| 18 | 20 A | BLU/BLK | Passenger's window motor |
| 19 | 7.5 A | YEL/BLK | ABS modulator unit, Daytime running lights control unit (Canada), Power mirror actuator, Rear window defogger relay |
| 20 | 7.5 A | BLK/YEL | A/C compressor clutch relay, Blower motor relay, Condenser fan relay, Heater control panel, Radiator fan relay, Recirculation control motor |
| 21 | 7.5 A | BLU/ORN | ECM, PGM-FI main relay |
| 22 | 15 A | WHT/BLU | Audio unit |
| 23 | 10 A | WHT/GRN | Audio unit light, Cruise control main switch light, Front parking lights, Gauge lights, Hazard warning switch light, Heater control panel lights, Keyless door lock control unit, License plate light, Option connector, Convertible top switch lights, Radio remote switch lights, Rear side marker lights, Taillights |
| 24 | 7.5 A | WHT/BLU | Ceiling/spotlights, Trunk light |
| 25 | 7.5 A | WHT/RED | ECM, Gauge assembly, Heater control panel, Immobilizer indicator light, Convertible top control unit |
| 26 | 15 A | WHT | Keyless door lock control unit, Trunk opener solenoid |
| 27 | 10 A | RED/BLU | Daytime running lights control unit (Canada) |
| 28 | — | — | Not used |

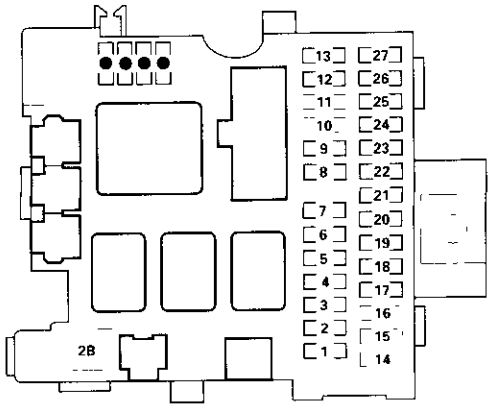

**Auxiliary Under-hood Fuse Box**

| Fuse Number | Amps | Wire Color | Component(s) or Circuit(s) Protected |
|---|---|---|---|
| 32 | 60 A | WHT | Air pump electric current sensor |
| 33 | 70 A | WHT/RED | EPS control unit |
| 34 | 20 A | WHT/GRN | Rear window defogger |
| 35 | ——— | ——— | Not used |
| 36 | ——— | ——— | Not used |

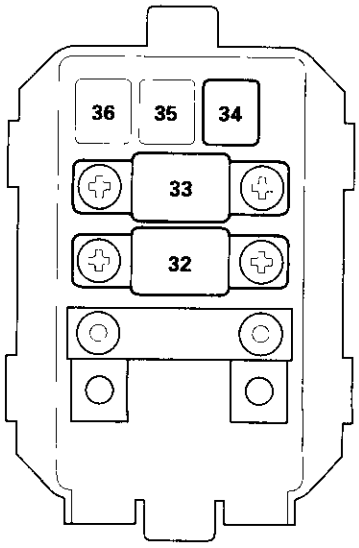

# Ground Distribution

## Ground to Components Index

| Ground | Component or circuit grounded |
|---|---|
| G1 | Battery |
| G2 | Engine block |
| G3 | Engine block |
| G4 | EPS gearbox |
| G101 | CKP sensor, Data link connector (DLC), ECM (PG1 and PG2 are BLK; LG1 and LG2 are BRN/YEL), IAC valve, Ignition coils, Immobilizer receiver unit, PGM-FI main relay, VSS, VTEC oil pressure switch |
| | Shielding between the ECM these components have BRN/YEL wires: CKP sensor, TDC sensor 1 and 2 (CMP sensor A and B), Primary HO2S, Secondary HO2S, Knock sensor |
| G201 | Blower motor relay, Condenser fan motor, ELD unit, EPS control unit, Front parking light (right), Front turn signal light (right), Radiator fan motor, Right headlight (low beam), Side turn signal light (right), Windshield washer motor |
| G301 | Air pump relay, Brake fluid level switch, Cruise control actuator, Front parking light (left), Front turn signal light (left), Radiator fan switch, Left headlight (low beam), Side turn signal light (left), Windshield wiper motor, Intermittent wiper relay ('02-03 models) |
| G302 | Air pump |
| G303 | ABS modulator unit (2 wires) |
| G351 | EPS control unit |
| G401 | Clutch pedal position switch, Clutch interlock switch, Combination light switch, Data link connector (DLC), Ignition key switch, Intermittent wiper relay ('00-01 models), Turn signal/hazard relay, Windshield wiper/washer switch, Rear window defogger switch ('00-01 models) |
| G402 | Cruise control unit, Daytime running lights control unit (Canada) (2 wires), EPS control unit, Heater control panel, Convertible top control unit (3 wires), Power transistor |
| G501 | Cruise main switch, Driver's door key cylinder switch, Driver's door lock actuator, Engine start switch, Gauge assembly (2 wires), Keyless door lock control unit, Power mirror switch, Passenger's window switch, Power window master switch, Convertible top control unit, Radio remote switch, Rear window defogger switch ('02-03 models) |
| G502 | Audio unit |
| G601 | Accessory power socket, Driver's seat belt switch, Fuel gauge sending unit (2 wires), High mount brake light, Trunk opener solenoid/latch switch, Rear window defogger subharness connector (option) ('00-01 models), Condenser and Diode (for rear window defogger change circuit) ('02-03 models), Rear window defogger (convertible top for '02-03 models), plus everything grounded through G901 |
| G602 | Back-up light (left/right), License plate light, Rear turn signal light (left/right), Rear side marker light (left/right), Taillight (left/right) |
| G801 | SRS unit (2 wires) |
| G901 | Convertible top disable switch, Rear window defogger relay ('00-01 models), plus everything grounded through G601 |
| G902 | Rear window defogger |

## Battery Test

**⚠ WARNING**

A battery can explode if you do not follow the proper procedure, causing serious injury to anyone nearby. Follow all procedures carefully and keep sparks and open flames away from the battery.

Use either a JCI or Bear ARBST tester, and follow the manufacturer's procedures. If you don't have one of these computerized testers, follow this conventional test procedure:

1. Be sure the temperature of the electrolyte is between 70°F (21°C) and 100°F (38°C).
2. Inspect the battery case for cracks or leaks.
   - If the case is damaged, replace the battery. ■
   - If the case looks OK, go to step 3.
3. Check the indicator EYE.
   - If the EYE indicates the battery is charged, go to step 4.
   - If the EYE indicates a low charge, go to step 7.
4. Apply a 300 amp load for 15 seconds to remove the surface charge.
5. Wait 15 seconds, then apply a test load of 280 amps for 15 seconds.
6. Record battery voltage.
   - If voltage is above 9.6 volts, the battery is OK. ■
   - If voltage is below 9.6 volts, go to step 7.
7. Charge the battery on High (40 amps) until the EYE shows the battery is charged, plus an additional 30 minutes. If the battery charge is very low, it may be necessary to bypass the charger's polarity protection circuitry.
   - If the EYE indicates the battery is charged within 3 hours, the battery is OK. ■
   - If the EYE indicates the battery is not charged within 3 hours, replace the battery. ■

## Power Relay Test

Use this chart to identify the type of relay, then do the test listed for it.

NOTE: For the turn signal/hazard relay input test (see page 22-78).

| Relay | Test |
|---|---|
| Accessory power socket relay | See page 22-40 Normally open type A |
| A/C compressor clutch relay | |
| Condensor fan relay | |
| Headlight relay 1 | |
| Headlight relay 2 | |
| High beam cut relay (Canada) | |
| Horn relay | |
| IG2 relay | |
| Radiator fan relay | |
| Starter cut relay | |
| Taillight relay | |
| Rear window defogger relay | |
| Blower motor relay | See page 22-41 Normally open type B |
| Intermittent wiper relay * 2 | See page 22-41 Five terminal type A |
| Intermittent wiper relay * 1 | See page 22-42 Five terminal type B |
| Rear window defogger change relay * 2 | |
| Rear window defogger relay * 2 | |

* 1: '00-01 models
* 2: '02-03 models

### Normally-open type A:

Check for continuity between the terminals.

- There should be continuity between the No. 1 and No. 2 terminals when power and ground are connected to the No. 3 and No. 4 terminals.
- There should be no continuity between the No. 1 and No. 2 terminals when power is disconnected.

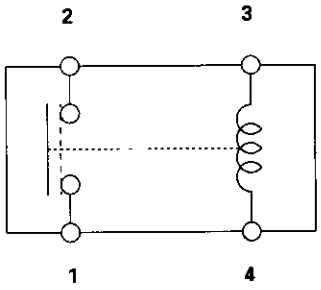


**type 1:**

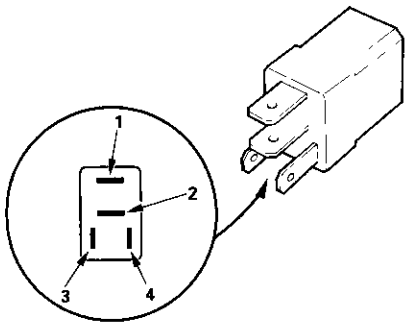


**type 2:**

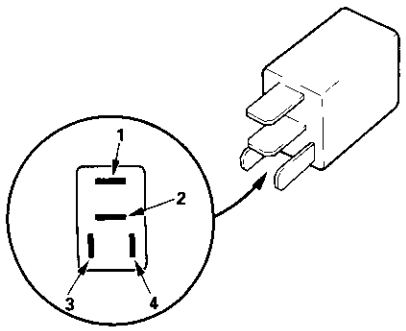

### Five-terminal type B:

Check for continuity between the terminals.

- There should be continuity between the No. 1 and No. 2 terminals when power and ground are connected to the No. 3 and No. 5 terminals.
- There should be continuity between the No. 1 and No. 4 terminals when power is disconnected.

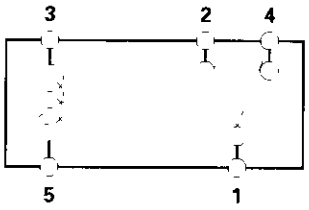


- Intermittent wiper relay ('00-01 models)
- Rear window defogger relay ('02-03 models)
- Rear window defogger change relay ('02-03 models)

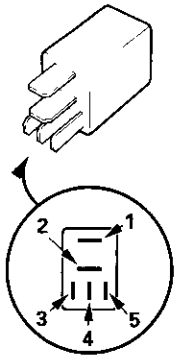


(cont'd)

## Power Relay Test (cont'd)

### Normally-open type B:

Check for continuity between the terminals.

- There should be continuity between the No. 1 and No. 3 terminals when power and ground are connected to the No. 2 and No. 4 terminals.
- There should be no continuity between the No. 1 and No. 3 terminals when power is disconnected.

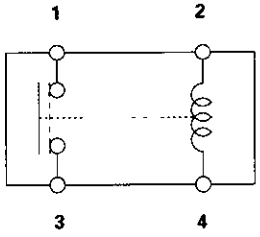


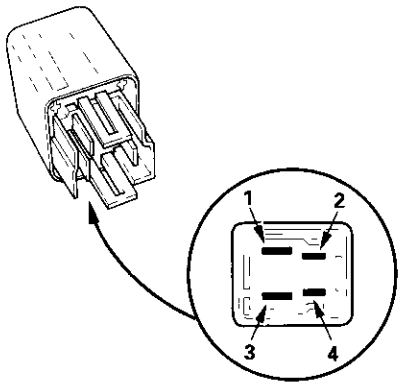


### Five-terminal type A:

Check for continuity between the terminals.

- There should be continuity between the No. 1 and No. 2 terminals when power and ground are connected to the No. 3 and No. 5 terminals.
- There should be continuity between the No. 2 and No. 4 terminals when power is disconnected.

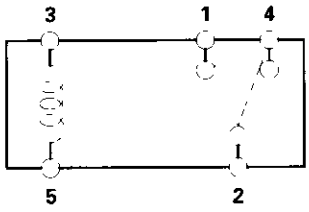


**Intermittent wiper relay ('02-03 models)**

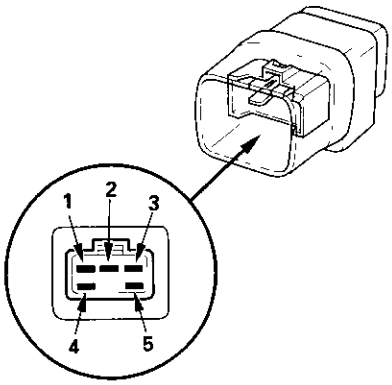

# Ignition Switch

## Test

SRS components are located in this area. Review the SRS component locations, precautions, and procedures in the SRS section before performing repairs or service (see page 23-10).

1. Make sure you have the anti-theft code for the radio, then write down the frequencies for the radio's preset buttons.
2. Disconnect the battery negative cable.
3. Disconnect the 7P connector from the under-dash fuse/relay box.

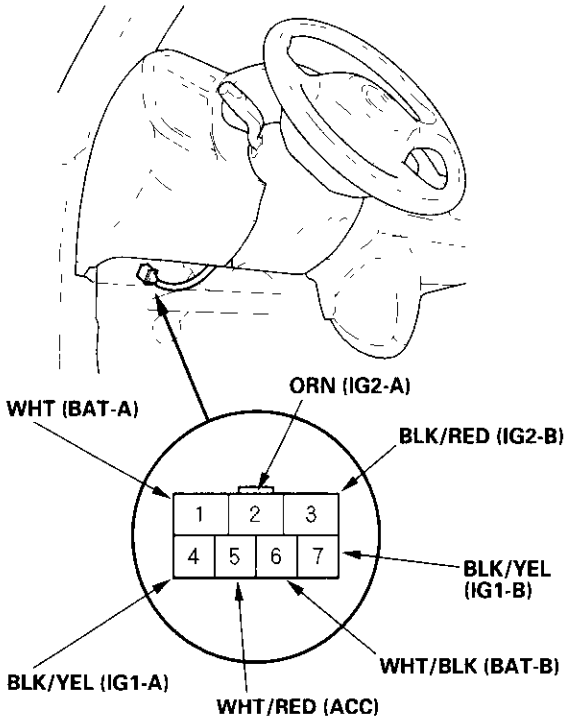


Wire side of female terminals

4. Check for continuity between the terminals in each switch position according to the table.

| Terminal / Position | WHT/ RED (ACC) | WHT/ BLK (BAT-B) | BLK/ RED (IG2-B) | WHT (BAT-A) | BLK/ YEL (IG1-A) (IG1-B) | ORN (IG2-B) |
|---|---|---|---|---|---|---|
| O (LOCK) | | | | | | |
| I (ACC) | ○ | ○ | | | | |
| II (ON) | ○ | ○ | ○ | ○ | ○ | ○ |

5. If the continuity checks do not agree with the table, replace the electrical switch.
6. After reconnecting the battery, enter the anti-theft code for the radio, then enter the customer's radio station presets.

## Component Location Index

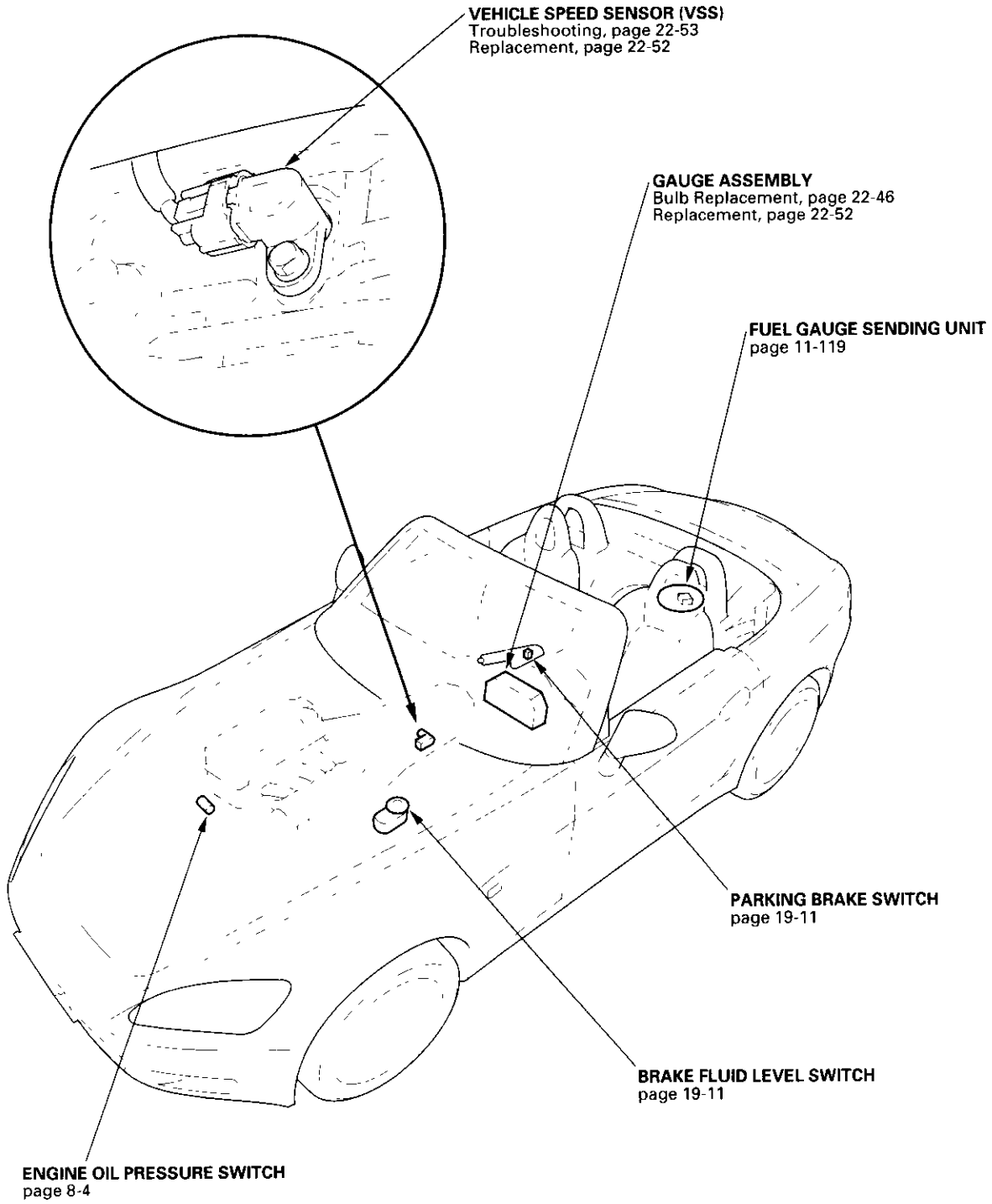

**Gauge/Terminal Location Index:**

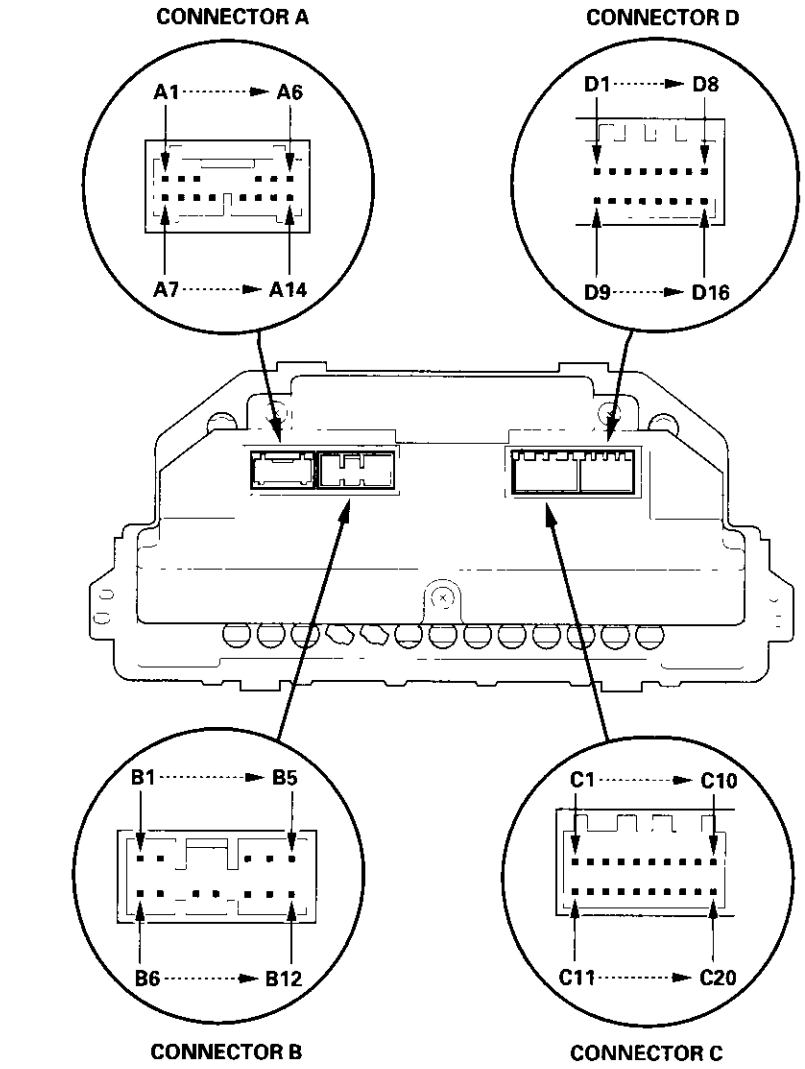


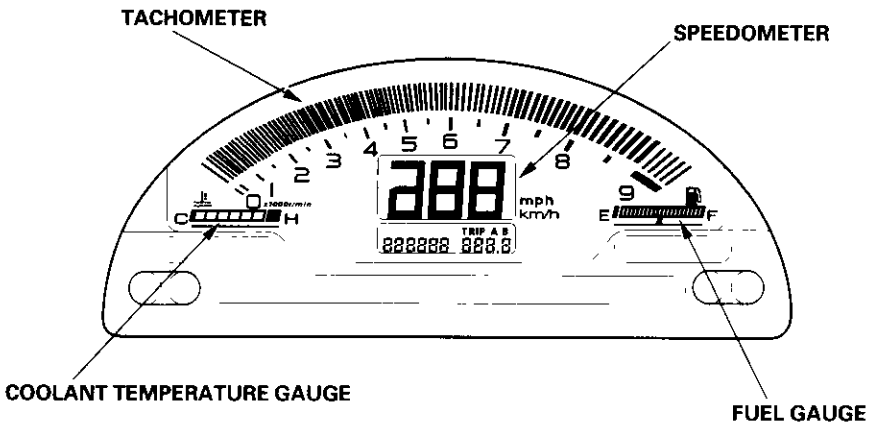

## Gauge Bulb Replacement

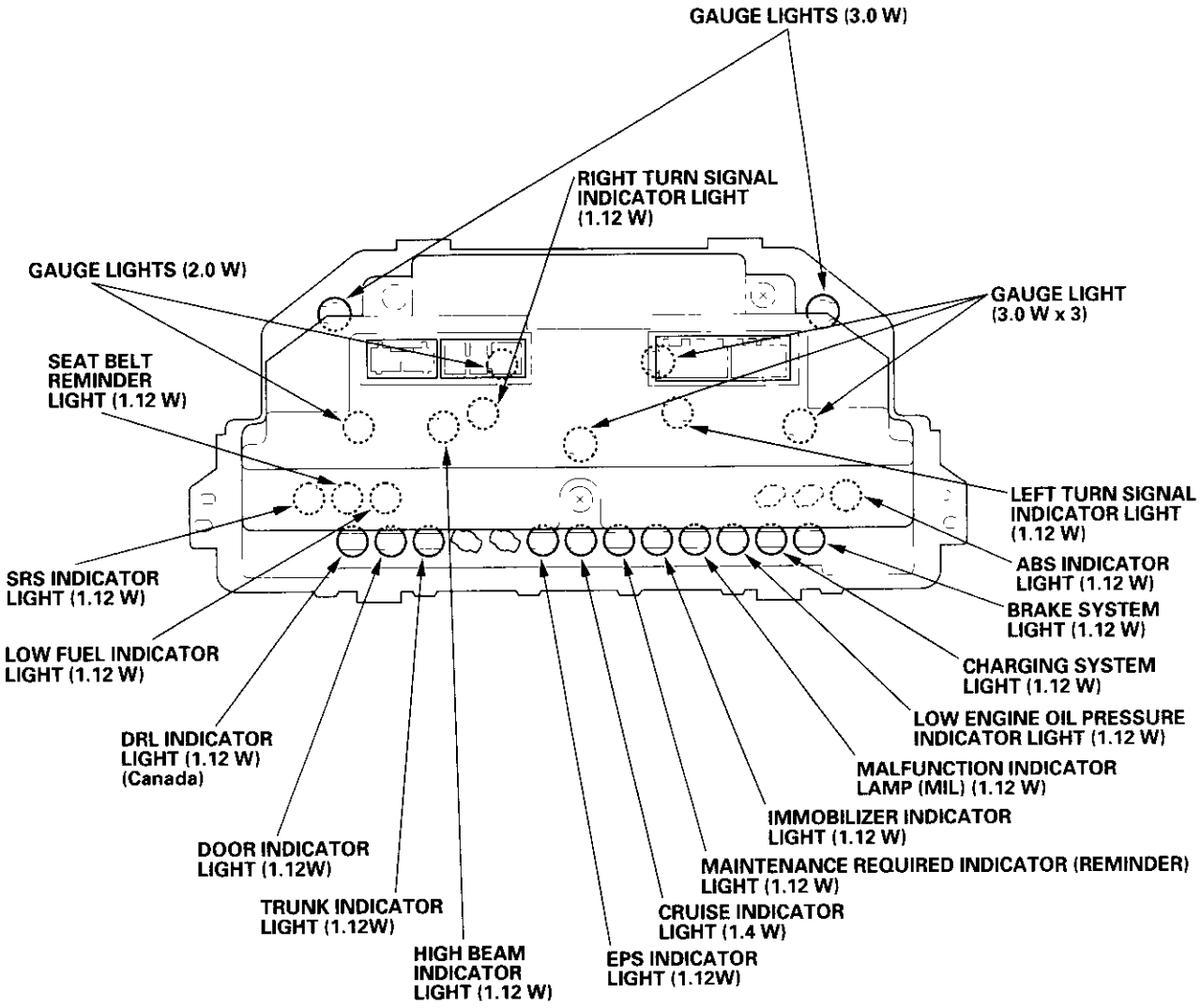

## Circuit Diagram

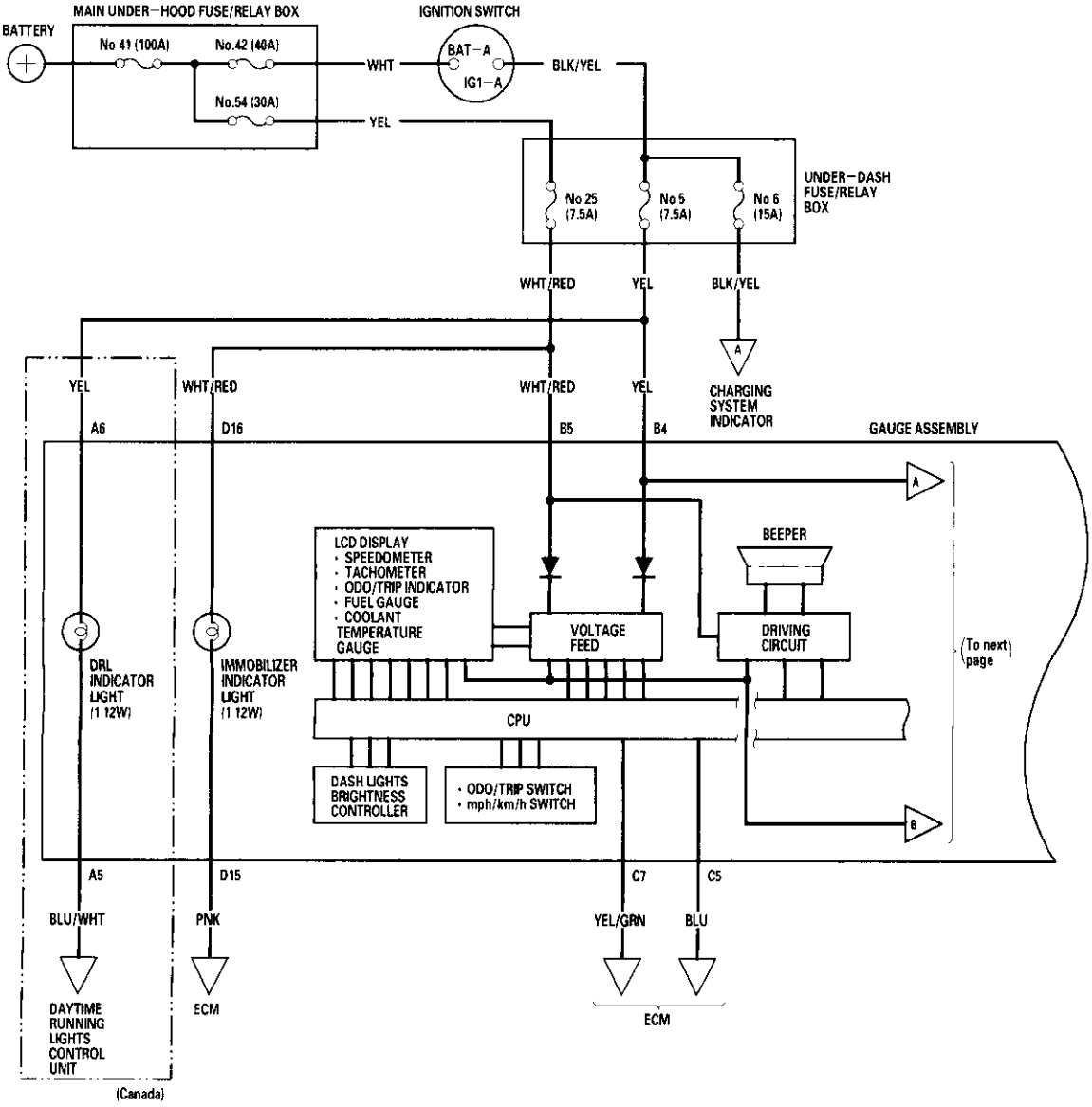


(cont'd)

## Circuit Diagram (cont'd)

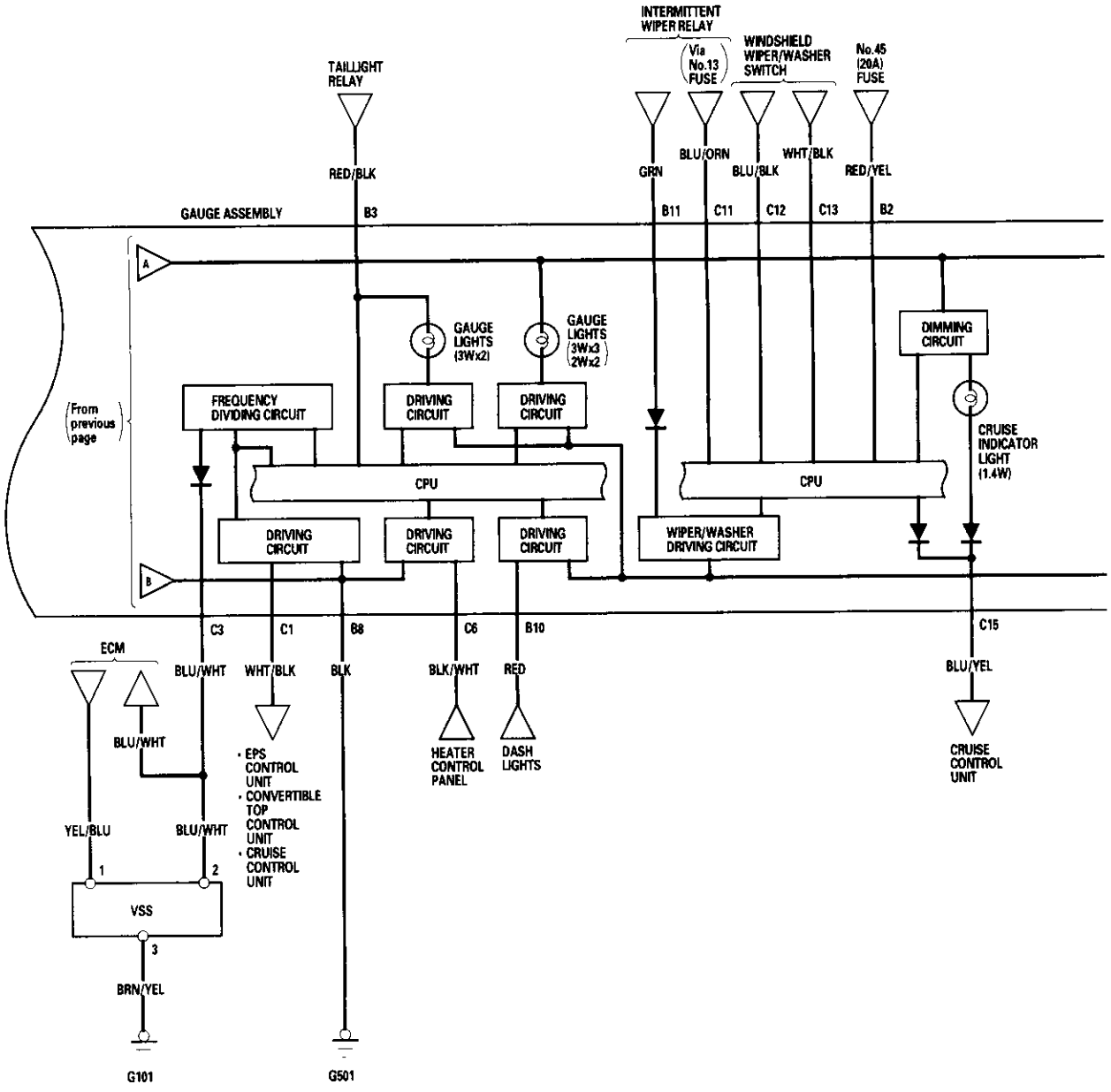

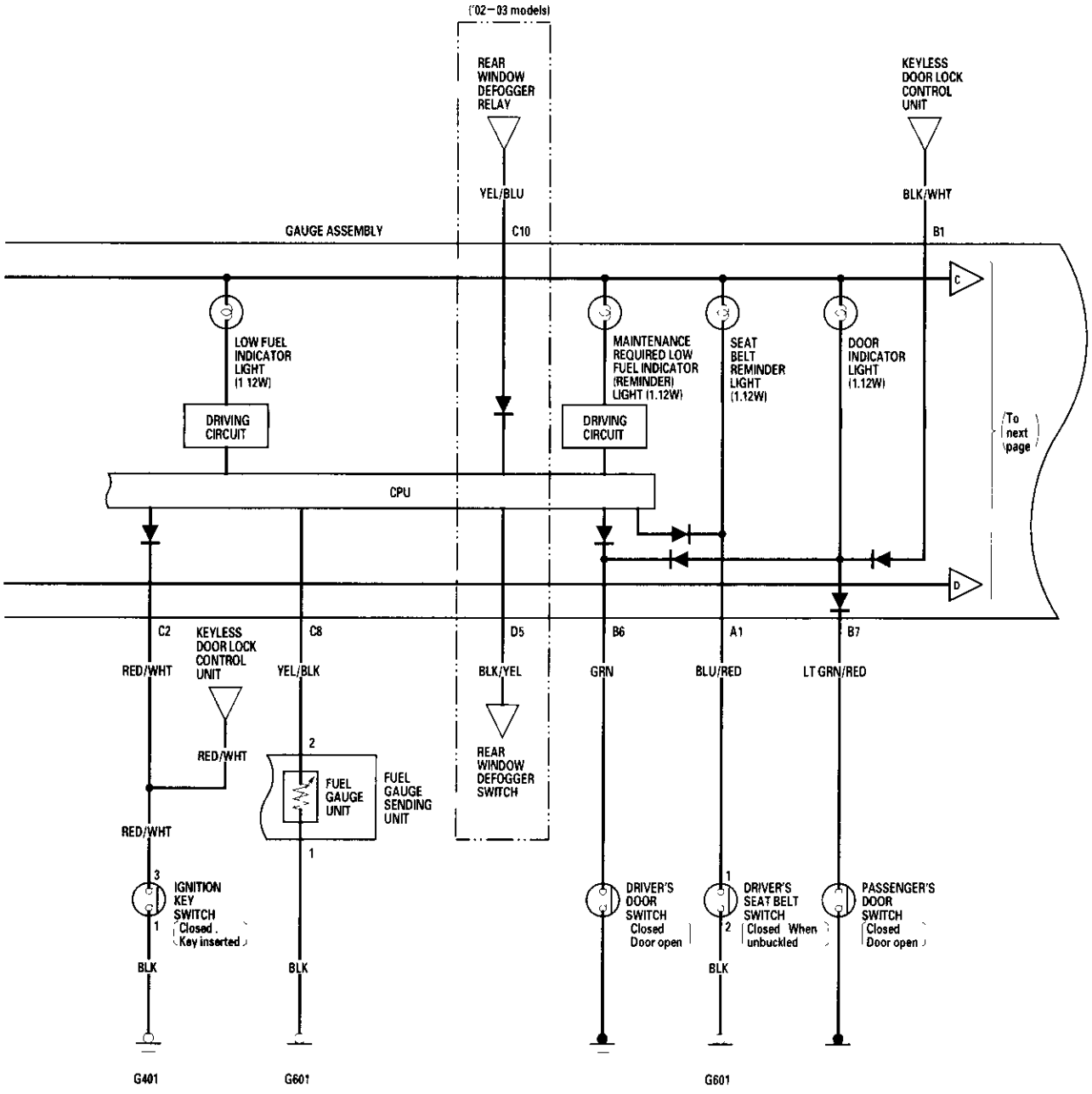
('02–'03 models)
REAR WINDOW DEFOGGER RELAY
KEYLESS DOOR LOCK CONTROL UNIT
YEL/BLU
BLK/WHT
GAUGE ASSEMBLY
C10
B1
C
LOW FUEL INDICATOR LIGHT (1.12W)
MAINTENANCE REQUIRED LOW FUEL INDICATOR (REMINDER) LIGHT (1.12W)
SEAT BELT REMINDER LIGHT (1.12W)
DOOR INDICATOR LIGHT (1.12W)
DRIVING CIRCUIT
DRIVING CIRCUIT
To next page
CPU
D
C2
KEYLESS DOOR LOCK CONTROL UNIT
C8
D5
B6
A1
B7
RED/WHT
YEL/BLK
BLK/YEL
GRN
BLU/RED
LT GRN/RED
RED/WHT
2
FUEL GAUGE UNIT
FUEL GAUGE SENDING UNIT
REAR WINDOW DEFOGGER SWITCH
RED/WHT
1
3
IGNITION KEY SWITCH
Closed . Key inserted
1
DRIVER'S DOOR SWITCH
Closed Door open
1
DRIVER'S SEAT BELT SWITCH
Closed When unbuckled
2
PASSENGER'S DOOR SWITCH
Closed Door open
BLK
BLK
BLK
G401
G601
G601

(cont'd)

## Circuit Diagram (cont'd)

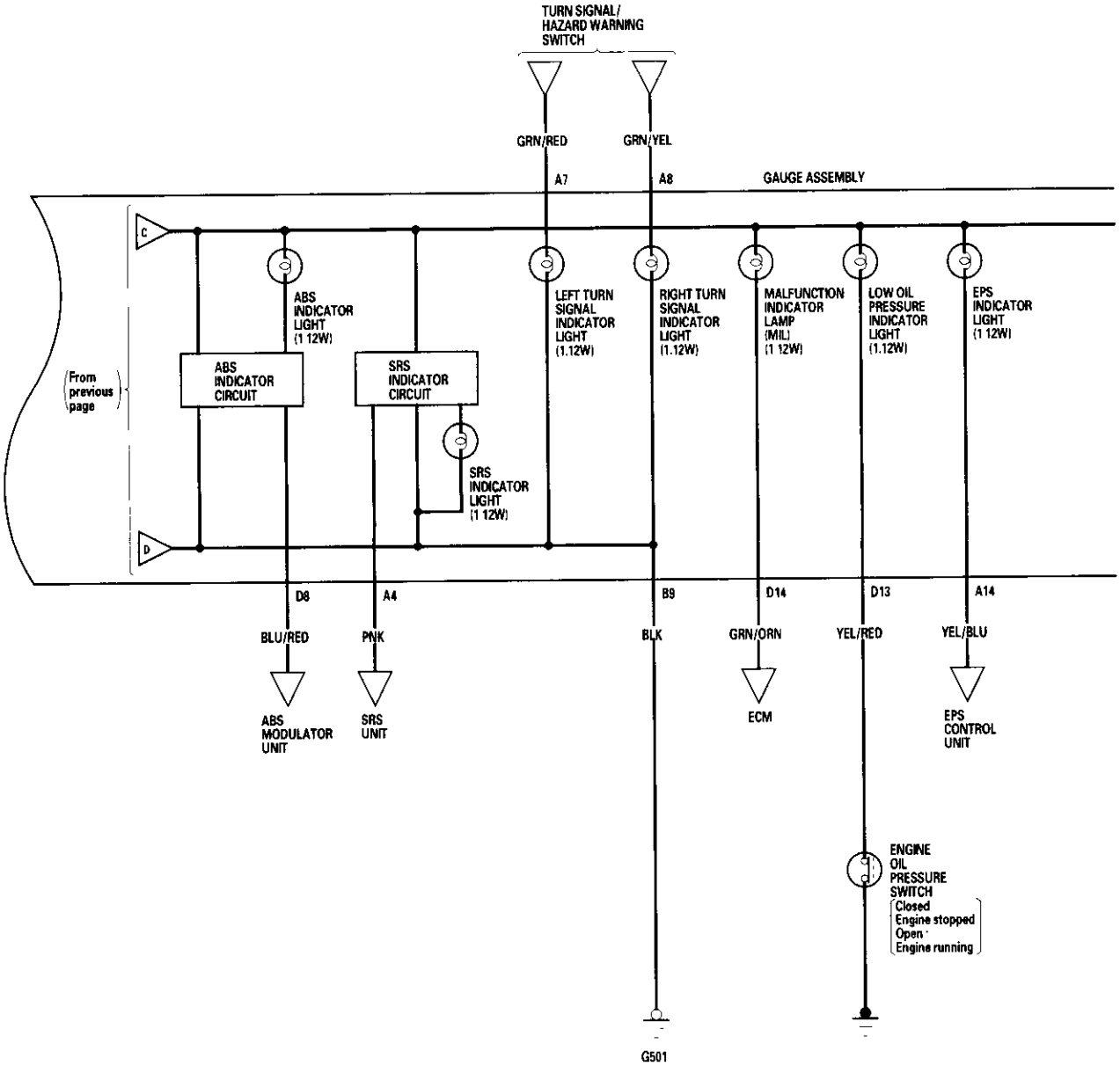

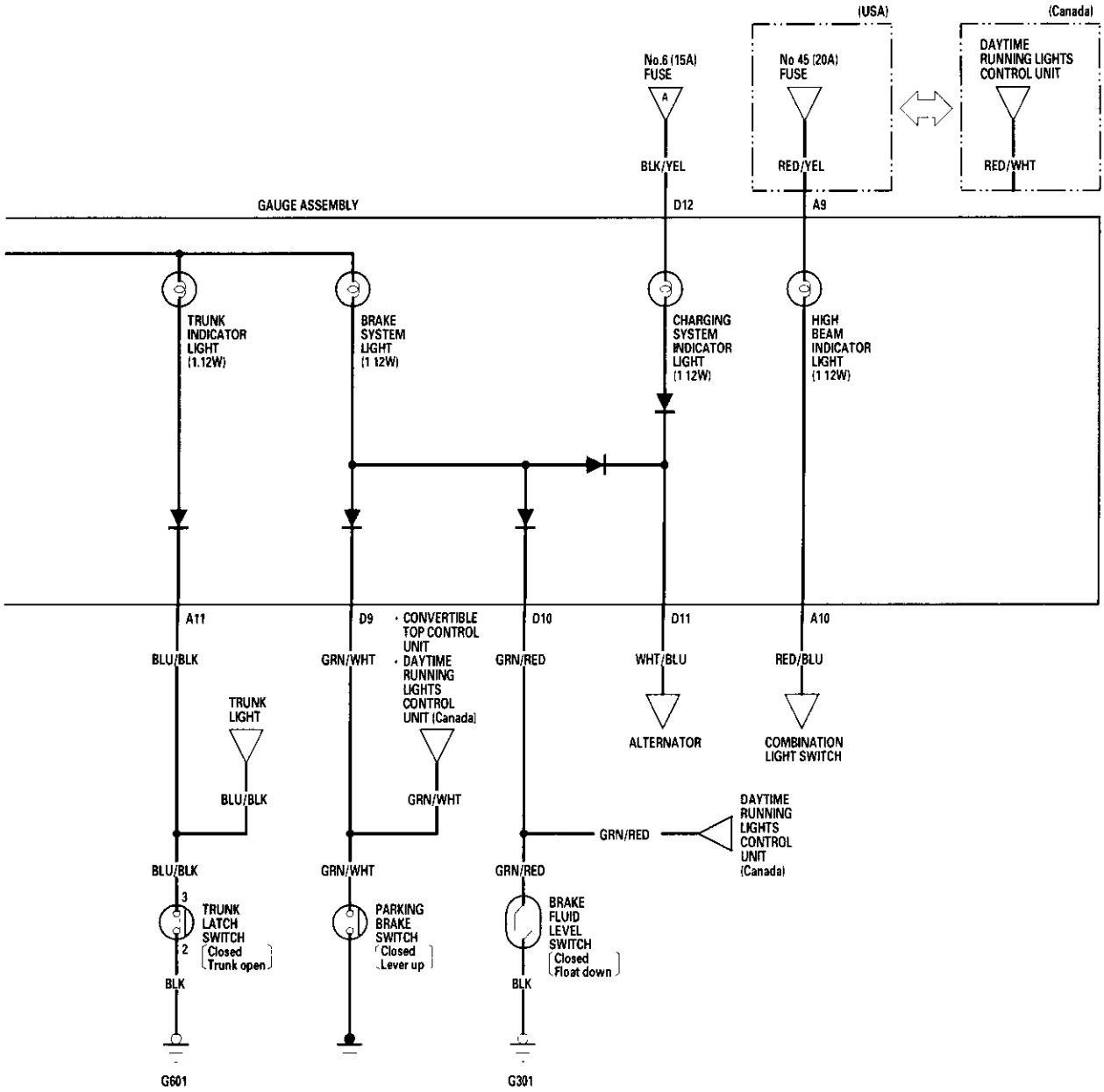
(USA)
(Canada)
No.6 (15A) FUSE
No 45 (20A) FUSE
DAYTIME RUNNING LIGHTS CONTROL UNIT
BLK/YEL
RED/YEL
RED/WHT
GAUGE ASSEMBLY
D12
A9
TRUNK INDICATOR LIGHT (1.12W)
BRAKE SYSTEM LIGHT (1 12W)
CHARGING SYSTEM INDICATOR LIGHT (1 12W)
HIGH BEAM INDICATOR LIGHT (1 12W)
A11
D9
D10
D11
A10
BLU/BLK
GRN/WHT
GRN/RED
WHT/BLU
RED/BLU
· CONVERTIBLE TOP CONTROL UNIT
· DAYTIME RUNNING LIGHTS CONTROL UNIT (Canada)
TRUNK LIGHT
ALTERNATOR
COMBINATION LIGHT SWITCH
DAYTIME RUNNING LIGHTS CONTROL UNIT (Canada)
3
2
TRUNK LATCH SWITCH
Closed
Trunk open
PARKING BRAKE SWITCH
Closed
Lever up
BRAKE FLUID LEVEL SWITCH
Closed
Float down
BLK
G601
G301

## Gauge Assembly Replacement

1. Lower the steering column, and remove the driver's airbag, steering wheel, steering column covers cable reel, and combination switch assembly (see page 17-9).
2. Remove the instrument panel (see page 20-80).
3. Remove the screws (A) from the gauge assembly (B), and spread a protective cloth (C) on the steering column.

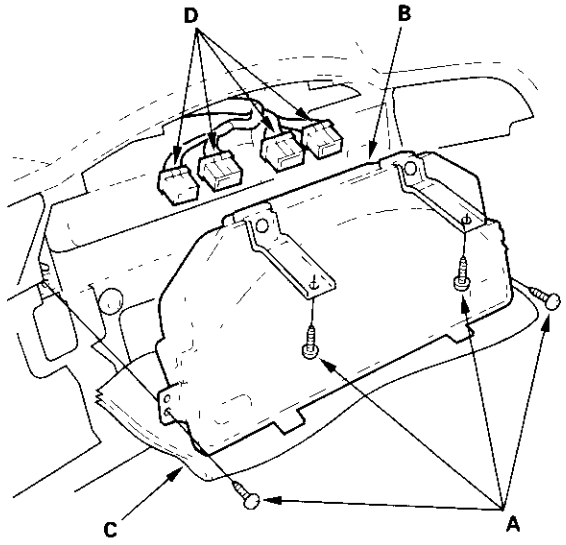


4. Disconnect the connectors (D), and remove the gauge assembly.
5. Remove the screws and the gauge assembly brackets.

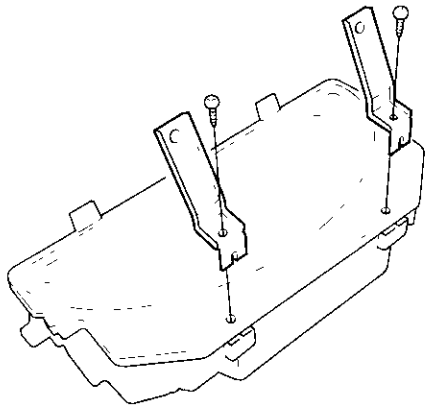

6. Install in the reverse order of removal.

## VSS Replacement

1. Raise the vehicle, and make sure it is securely supported.
2. Disconnect the 3P connector from the vehicle speed sensor (VSS).

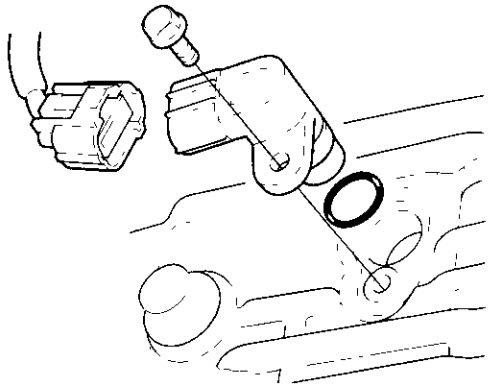

3. Remove the mounting bolt, then remove the VSS.
4. Install in the reverse order of removal.

## Vehicle Speed Signal Circuit Troubleshooting

Note: If the MIL indicator is ON, troubleshoot the PGM-FI problem first.

1. Raise the vehicle, and make sure it is securely supported.
2. Disconnect the VSS 3P connector.
3. Turn the ignition switch ON (II).

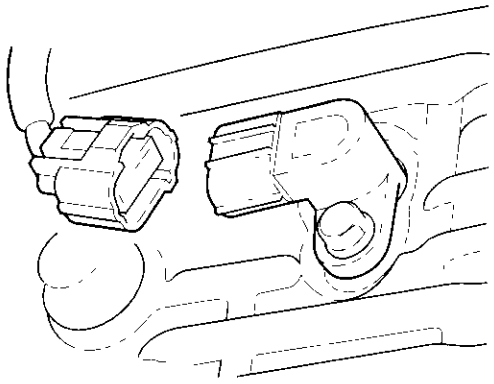

4. Check for voltage between the VSS 3P connector No. 3 terminal and body ground.

**VSS 3P CONNECTOR**

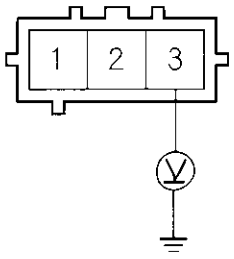


*Is there less than 1 V?*

**YES** – Go to step 5.

**NO** – Repair open or high resistance in the BRN/YEL wire between the VSS and G101.■

5. Measure voltage between the VSS 3P connector No. 1 terminal and body ground.

**VSS 3P CONNECTOR**

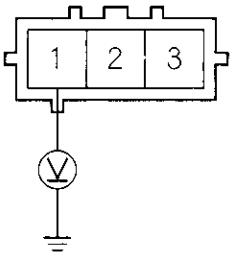


*Is there approx. 5 V?*

**YES** – Go to step 6.

**NO** – Repair short in the YEL/BLU wire between the VSS and the ECM.■

(cont'd)

## Vehicle Speed Signal Circuit Troubleshooting (cont'd)

6. Reconnect the VSS 3P connector, and put the car in neutral with the ignition switch ON (II).
7. Slowly rotate the propeller shaft.
8. Measure voltage between the gauge assembly connector C (20P) No. 3 terminal and body ground.

**GAUGE ASSEMBLY CONNECTOR C (20P)**

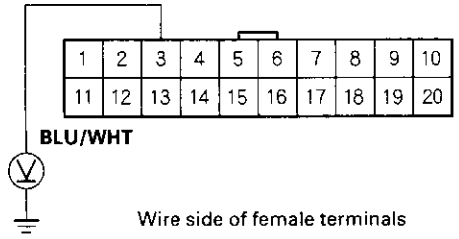


*Does voltage pulse from 0 to approx. 5 V?*

**YES** – Check connections, and if necessary, replace the printed circuit board.■

**NO** – Go to step 9.

9. Turn the ignition switch OFF.
10. Disconnect the 3P connector from the vehicle speed sensor (VSS).
11. Turn the ignition switch ON (II).
12. Measure the voltage between the VSS 3P connector No.2 terminal and body ground.

*Is there approx. 5 V?*

**YES** – Replace the VSS.■

**NO** – Replace the short to ground or open in the BLU/WHT wire.■

## Maintenance Required Indicator Reset Procedure

### How to Reset:

Push and hold the trip button, turn the ignition switch ON (II), and continue holding the trip button for more than 10 seconds.

**Blinking Pattern:**

| Miles (km) | Maintenance Reminder Light |
|---|---|
| At 5,900 (9,440) to 6,100 (9,760) | Blinks for 10 seconds when the ignition switch is turned ON (II). |
| At 7,400 (11,840) to 7,600 (12,160) | Comes on and stays on while the ignition switch is ON (II). |

## Tachometer Circuit Troubleshooting

NOTE: If the MIL indicator is on, troubleshoot the PGM-FI problem first.

1. Remove the gauge assembly (see page 22-52).
2. Disconnect the gauge assembly connector C (20P) and the ECM connector A (32P).
3. Check for continuity between the gauge assembly connector C (20P) No. 5 terminal and ECM connector A (32P) No. 19 terminal.

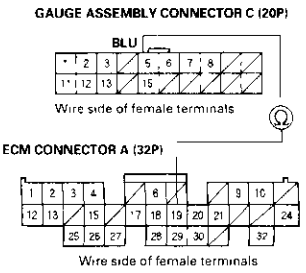


*Is there continuity?*

**YES** – Go to step 4.

**NO** – Repair open in the BLU wire between the gauge assembly and the ECM. ■

4. Check for continuity between the gauge assembly connector C (20P) No. 5 terminal and body ground.

*Is there continuity?*

**YES** · Repair short to ground in the BLU wire between the gauge assembly and the ECM. ■

**NO** – Go to step 5.

5. Reconnect the gauge assembly connector C (20P) and the ECM connector A (32P).
6. Check the EPS system for DTC 22 or 23.

*Is DTC 22 or 23 present?*

**YES** – Go to the EPS system Troubleshooting Index. If OK, substitute a known-good ECM and retest the circuit. If OK, replace the ECM. ■

**NO** – Check for continuity between the gauge assembly connector A14 terminal and the EPS control unit connnector B12 terminal, and the gauge assembly connector C5 terminal and the EPS control unit connector B5 terminal. If OK, replace the main printed circuit board in the gauge assembly. ■

## Coolant Temperature Gauge Circuit Troubleshooting

1. Check for PGM-FI DTCs.

*Is DTC P0116, P0117, or P0118 indicated?*

**YES** · Go to the ECM DTC Troubleshooting Index. ■

**NO** – Go to step 2.

2. Remove the gauge assembly (see page 22-52).
3. Disconnect the gauge assembly connecter C (20P) and the ECM connecter A (32P).
4. Check for continuity between the gauge assembly connector C (20P) No. 7 terminal and ECM connector A (32P) No. 1 terminal.

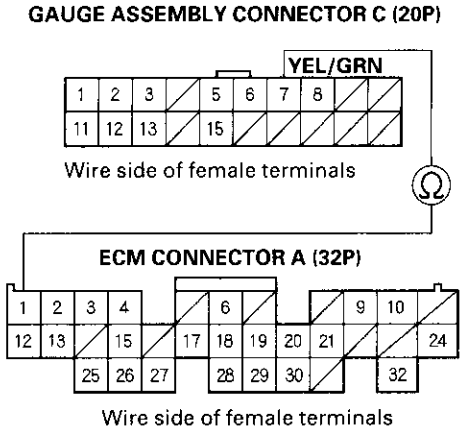


*Is there continuity?*

**YES** Go to step 5.

**NO** – Repair open in the YEL/GRN wire between the gauge assembly and the ECM. ■

5. Check for continuity between the gauge assembly connector C (20P) No. 7 terminal and body ground.

*Is there continuity?*

**YES** – Check the output from the ECM first, if OK, repair short to body ground in the YEL/GRN wire between the gauge assembly and the ECM. ■

**NO** – Check connections, If OK, replace the main printed circuit board in the gauge assembly. ■

# Lights-on, Key-in, Seat Belt Reminder System

## Circuit Diagram

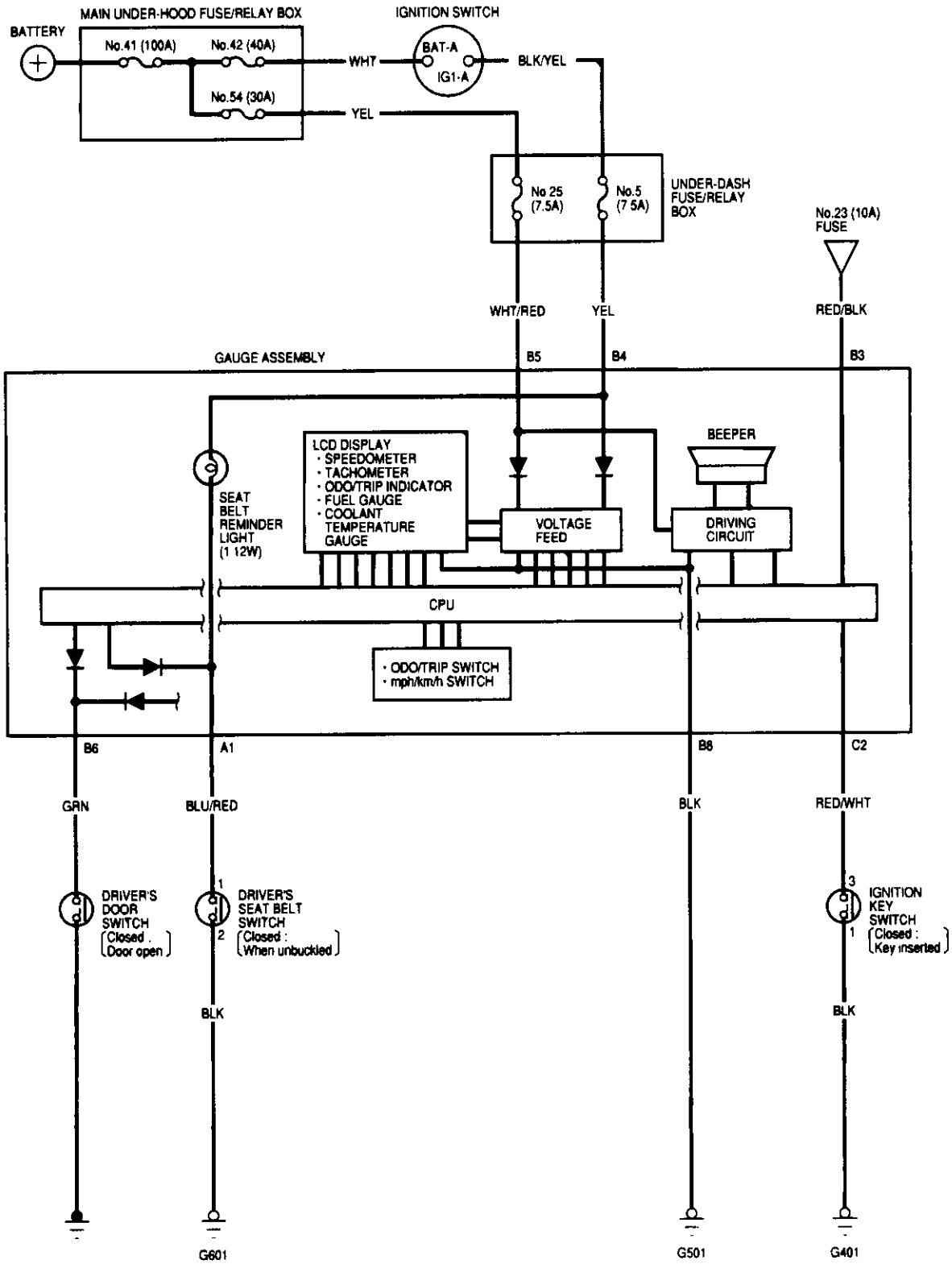

## System Input Test

1. Remove the gauge assembly (see page 22-52).

2. Inspect the all connectors and socket terminals to be sure they are all making good contact.

   - If the terminal are bent, loose, or corroded, repair them as necessary, and recheck the system.
   - If the terminals look OK, go to step 3.

**GAUGE ASSEMBLY CONNECTOR A (14P)**

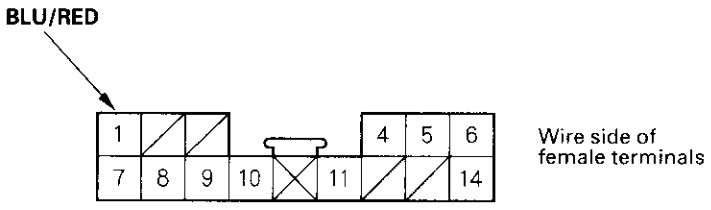


**GAUGE ASSEMBLY CONNECTOR B (12P)**

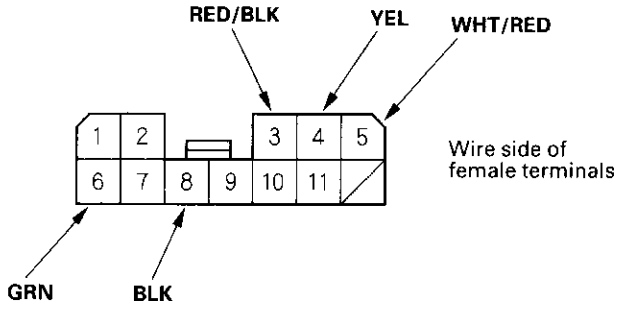


**GAUGE ASSEMBLY CONNECTOR C (20P)**

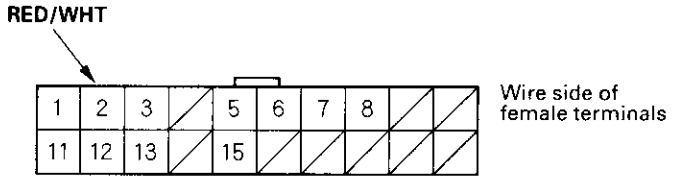


(cont'd)

## System Input Test (cont'd)

3. With the connectors connected, back probe the connectors and make these input tests.

- If any test indicates a problem, find and correct the cause, then recheck the system.
- If all the input tests prove OK, the gauge assembly must be faulty; replace it.

| Cavity | Wire | Test condition | Test: Desired result | Possible cause if result is not obtained |
|---|---|---|---|---|
| B4 | YEL | Ignition switch ON (II) | Check for voltage to ground: There should be battery voltage. | • Blown No. 5 (7.5 A) fuse in the under-dash fuse/relay box<br>• An open in the wire |
| B5 | WHT/RED | Under all conditions | Check for voltage to ground: There should be battery voltage. | • Blown No. 25 (7.5 A) fuse in the under-dash fuse/relay box<br>• An open in the wire |
| B3 | RED/BLK | Combination light switch ON | Check for voltage to ground: There should be battery voltage. | • Blown No. 23 (10 A) fuse in the under-dash fuse/relay box<br>• Faulty taillight relay<br>• Faulty combination light switch<br>• An open in the wire |
| C2 | RED/WHT | Ignition key is inserted into the ignition switch | Check for voltage to ground: There should be 1 V or less. | • Faulty ignition key switch<br>• Poor ground (G401)<br>• An open in the wire |
| | | Ignition key not in ignition | Check for voltage to ground. There should be 5 V or more. | • Faulty ignition switch.<br>• Short to ground in the wire. |
| A1 | BLU/RED | Ignition switch ON (II) and driver's seat belt unbuckled | Check for voltage to ground: There should be 1 V or less. | • Faulty driver's seat belt switch<br>• Poor ground (G601)<br>• An open in the wire |
| | | Ignition switch ON (II) and driver's seat belt buckled | Check for voltage to ground. There should be 5 V or more. | • Faulty driver's seat belt switch.<br>• Short to ground in the wire. |
| B8 | BLK | Under all conditions | Check for continuity to ground: There should be continuity. | • Poor ground (G501)<br>• An open in the wire |
| B6 | GRN | Driver's door open | Check for voltage to ground: There should be 1 V or less. | • Faulty driver's door switch<br>• An open in the wire |
| | | Driver's door closed | Check for voltage to ground. There should be 5 V or more. | • Faulty driver's door switch.<br>• Short in the wire. |
| B4 | YEL | Ignition switch ON (II) and trip reset button pressed | Check the beeper operation. The beeper should come on. | • Faulty beeper<br>• Poor ground (G501)<br>• An open in the wire<br>• Faulty gauge assembly |
| B5 | WHT/RED | | | |
| B8 | BLK | | | |

## Component Location Index

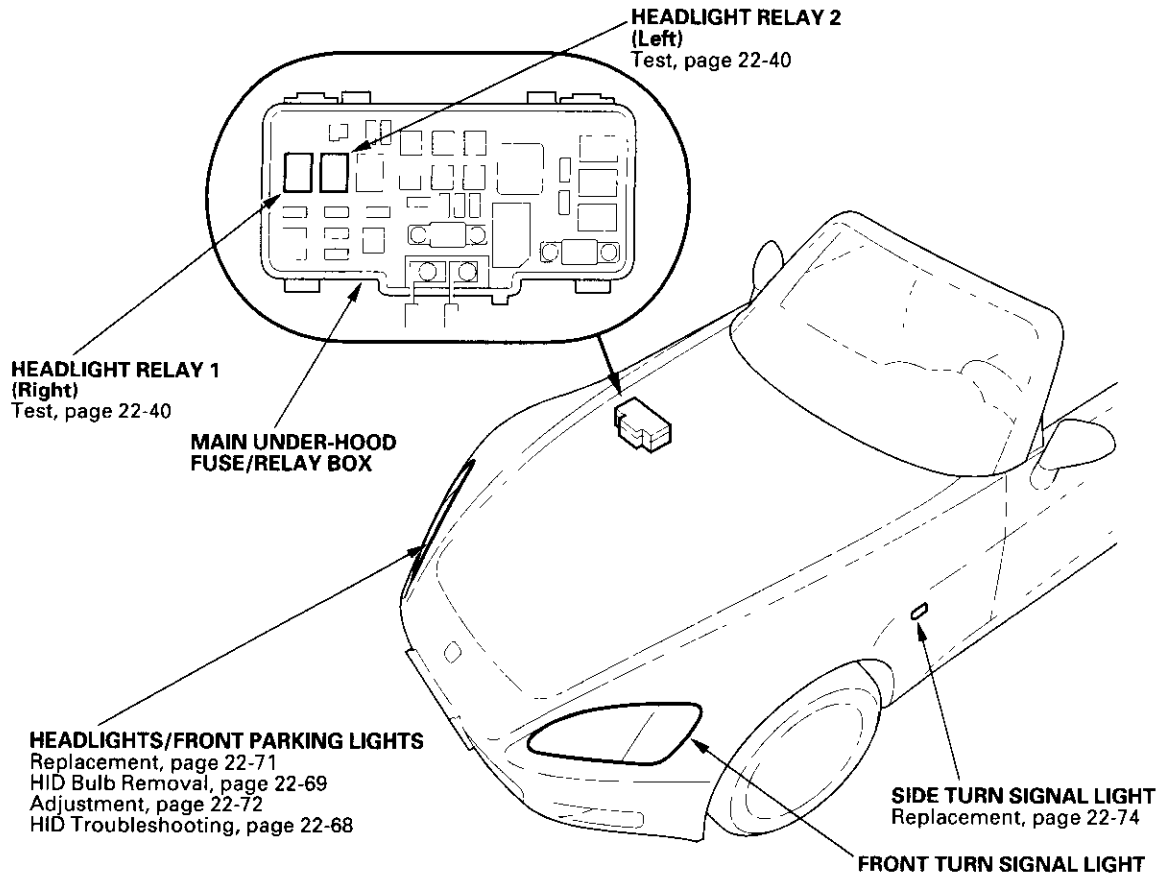


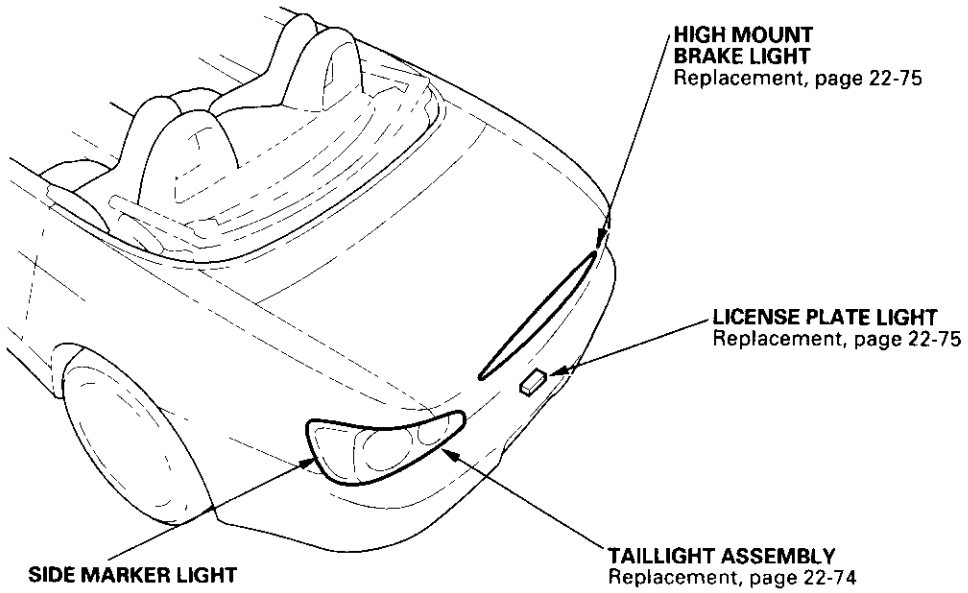


(cont'd)

## Component Location Index (cont'd)

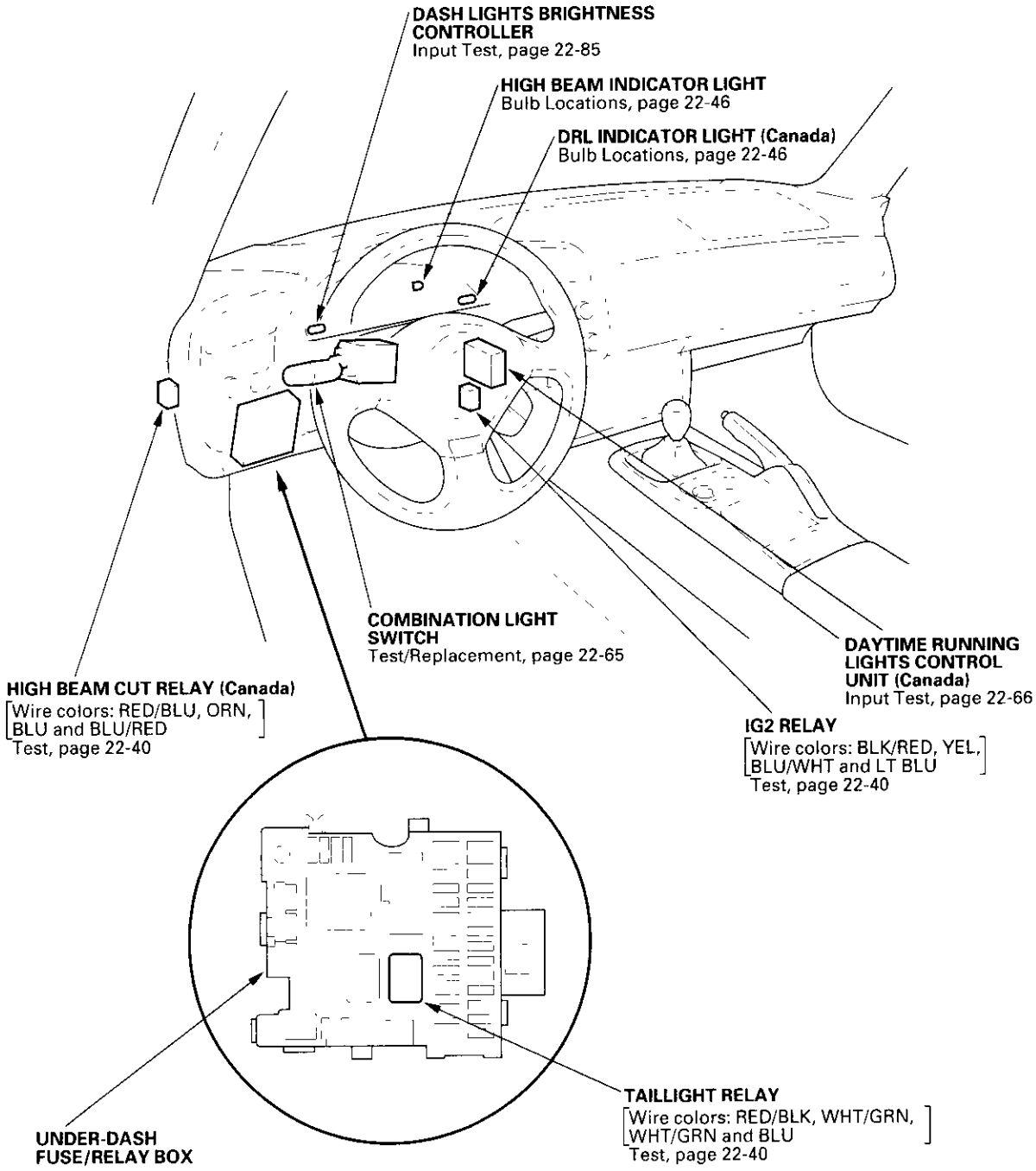

## Circuit Diagram - USA

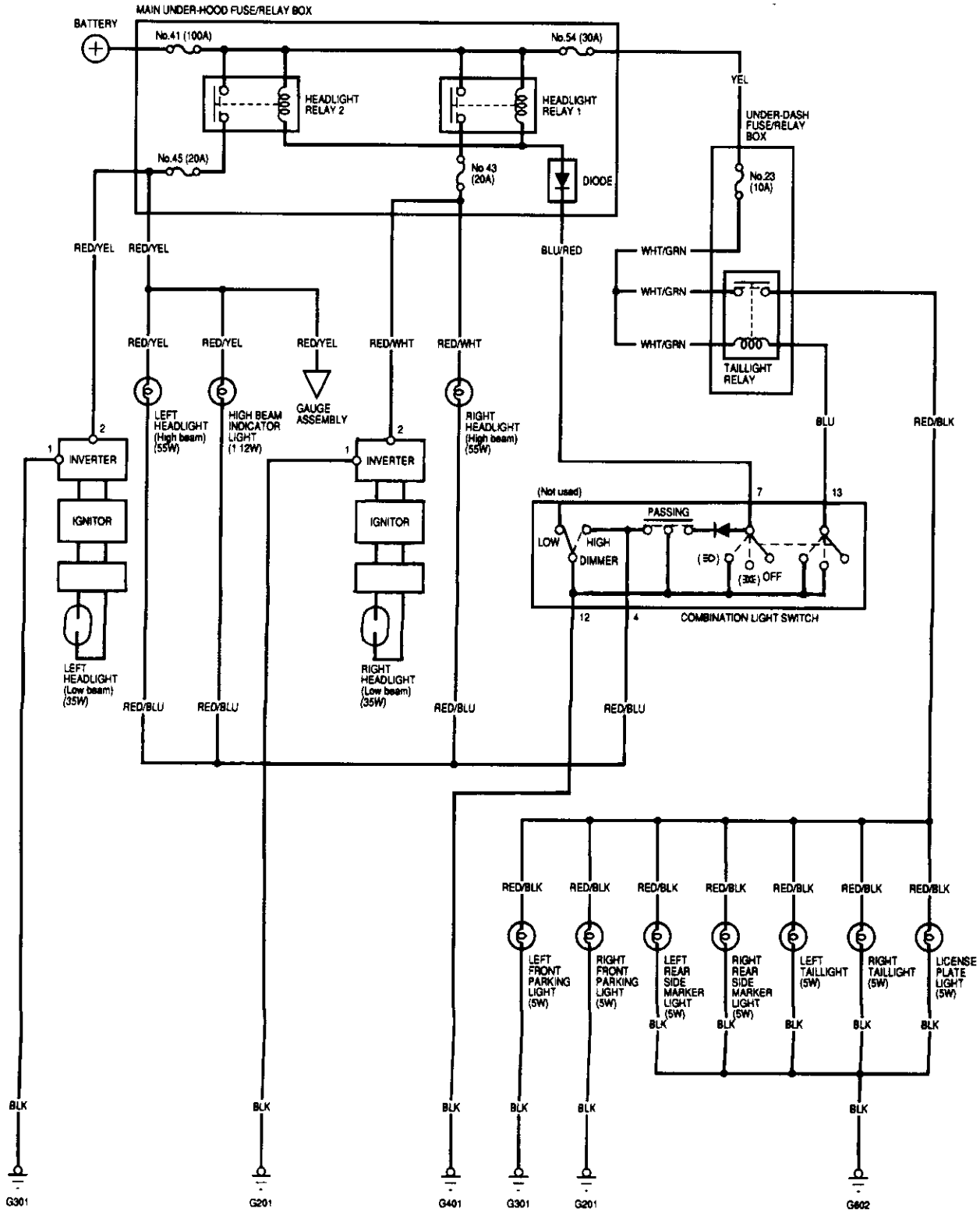

## Circuit Diagram - Canada

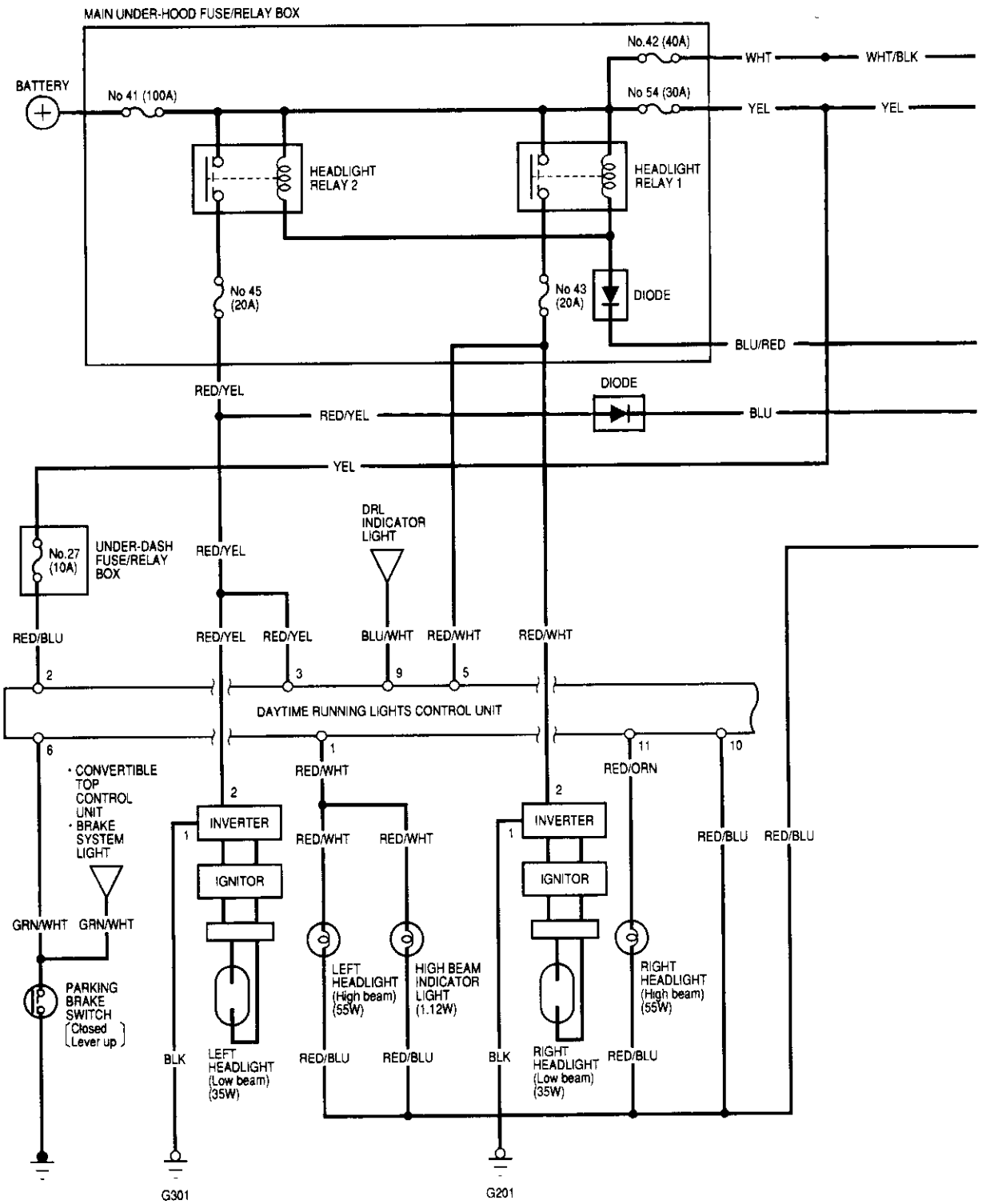

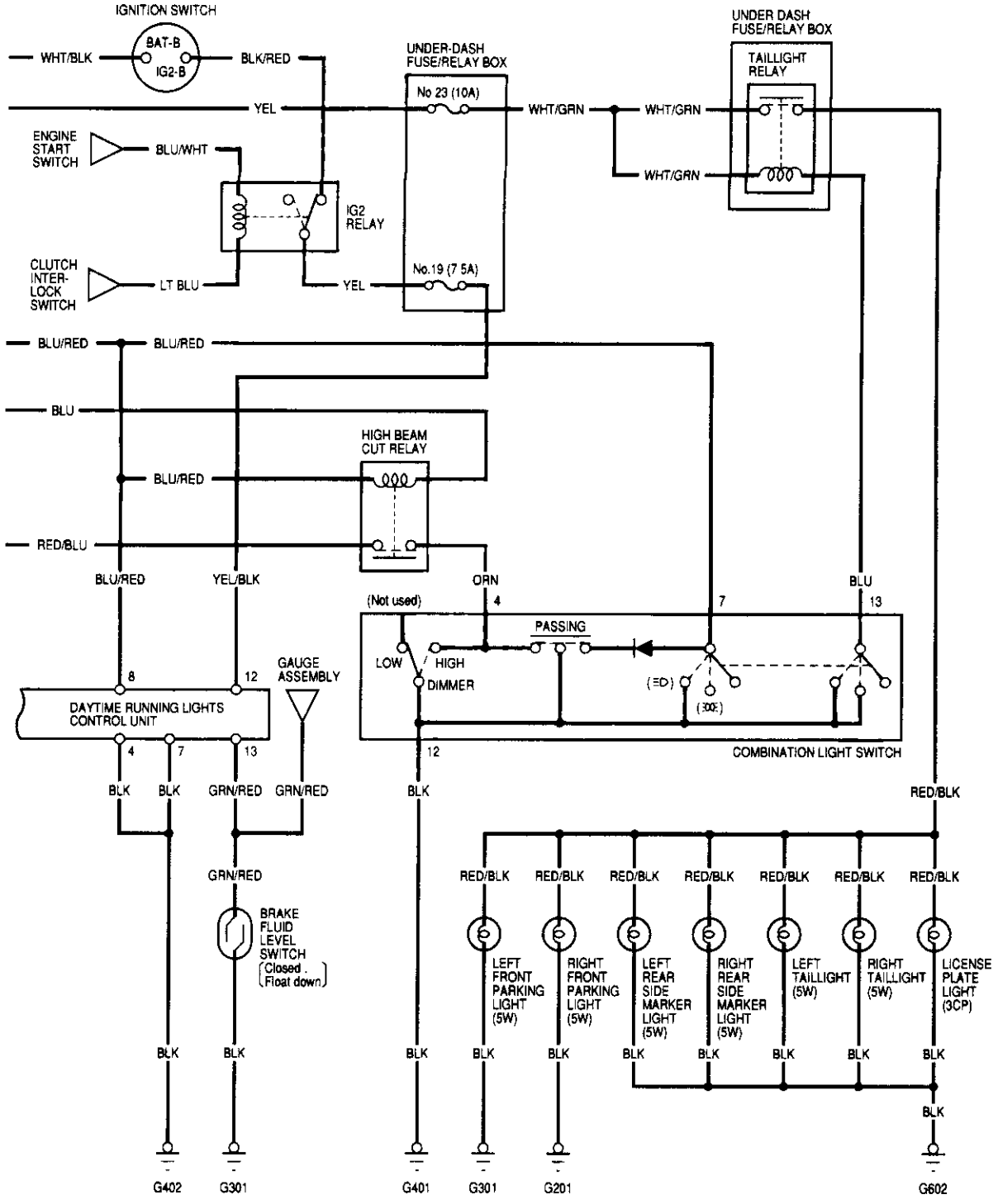
IGNITION SWITCH
BAT-B
IG2-B
WHT/BLK
BLK/RED
YEL
UNDER-DASH FUSE/RELAY BOX
No 23 (10A)
WHT/GRN
UNDER DASH FUSE/RELAY BOX
TAILLIGHT RELAY
WHT/GRN
WHT/GRN
ENGINE START SWITCH
BLU/WHT
IG2 RELAY
CLUTCH INTER-LOCK SWITCH
LT BLU
YEL
No.19 (7.5A)
BLU/RED
BLU/RED
BLU
HIGH BEAM CUT RELAY
BLU/RED
RED/BLU
BLU/RED
YEL/BLK
ORN
BLU
(Not used)
4
7
13
PASSING
LOW
HIGH
DIMMER
GAUGE ASSEMBLY
8
12
DAYTIME RUNNING LIGHTS CONTROL UNIT
4
7
13
12
COMBINATION LIGHT SWITCH
BLK
BLK
GRN/RED
GRN/RED
BLK
RED/BLK
GRN/RED
BRAKE FLUID LEVEL SWITCH
(Closed . Float down)
RED/BLK
RED/BLK
RED/BLK
RED/BLK
RED/BLK
RED/BLK
RED/BLK
LEFT FRONT PARKING LIGHT (5W)
RIGHT FRONT PARKING LIGHT (5W)
LEFT REAR SIDE MARKER LIGHT (5W)
RIGHT REAR SIDE MARKER LIGHT (5W)
LEFT TAILLIGHT (5W)
RIGHT TAILLIGHT (5W)
LICENSE PLATE LIGHT (3CP)
BLK
BLK
BLK
BLK
BLK
BLK
BLK
BLK
BLK
BLK
BLK
BLK
BLK
G402
G301
G401
G301
G201
G602

## Circuit Diagram - Brake Lights

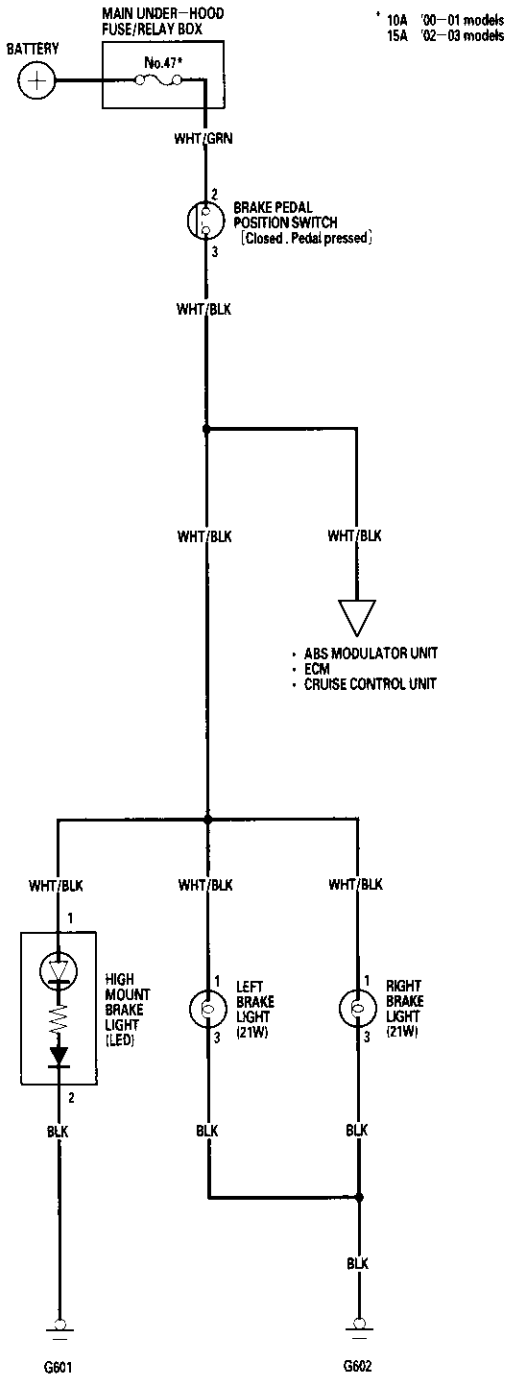


## Circuit Diagram - Back-up Lights

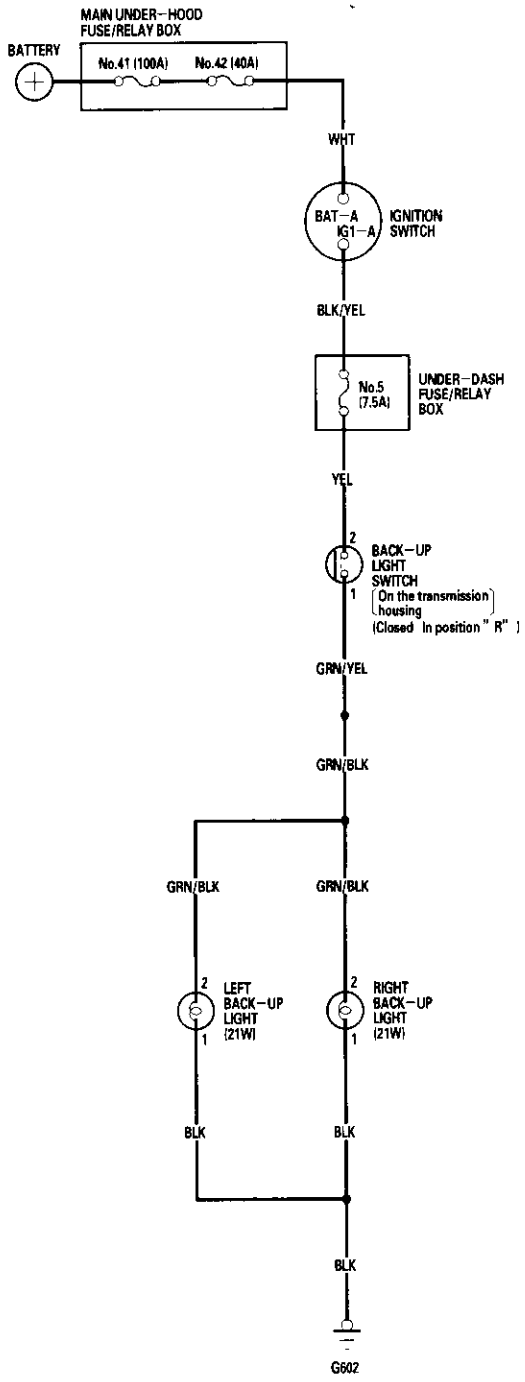

# Combination Light Switch Test/Replacement

1. Remove the steering column covers (see page 17-9).
2. Disconnect the 16P connector (A) from the combination light switch (B).

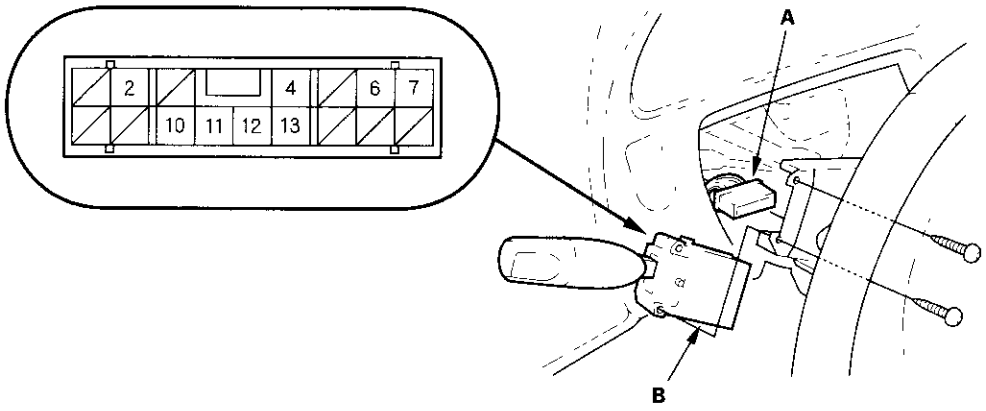


3. Remove the two screws, then pull out the combination light switch.
4. Inspect the connector terminals to be sure they are all making good contact.
   - If the terminals are bent, loose or corroded, repair them as necessary, and recheck the system.
   - If the terminals look OK, check for continuity between the terminals in each switch position according to the tables.
     - If the continuity is not as specified, replace the switch.

**Light switch:**

| Position \ Terminal | | | 7 | 6 | 4 | 12 | 13 |
|---|---|---|---|---|---|---|---|
| Headlight switch | OFF | | | | | | |
| | ≡D | | | | | ○——○ | |
| | | LOW | ○——○ | ○——○ | | ○——○ | ○——○ |
| | | HIGH | ○——○ | | ○——○ | ○——○ | ○——○ |
| Passing switch | OFF | | | | | | |
| | ON | | ○——○ | | ○——○ | ○——○ | |

**Turn signal switch:**

| Position \ Terminal | 2 | 11 | 10 |
|---|---|---|---|
| LEFT | ○——○ | | ○——○ |
| NEUTRAL | | | |
| RIGHT | | ○——○ | ○——○ |

## Daytime Running Lights Control Unit Input Test - Canada

1. Disconnect the 14P connector (A) from the daytime running lights control unit (B).

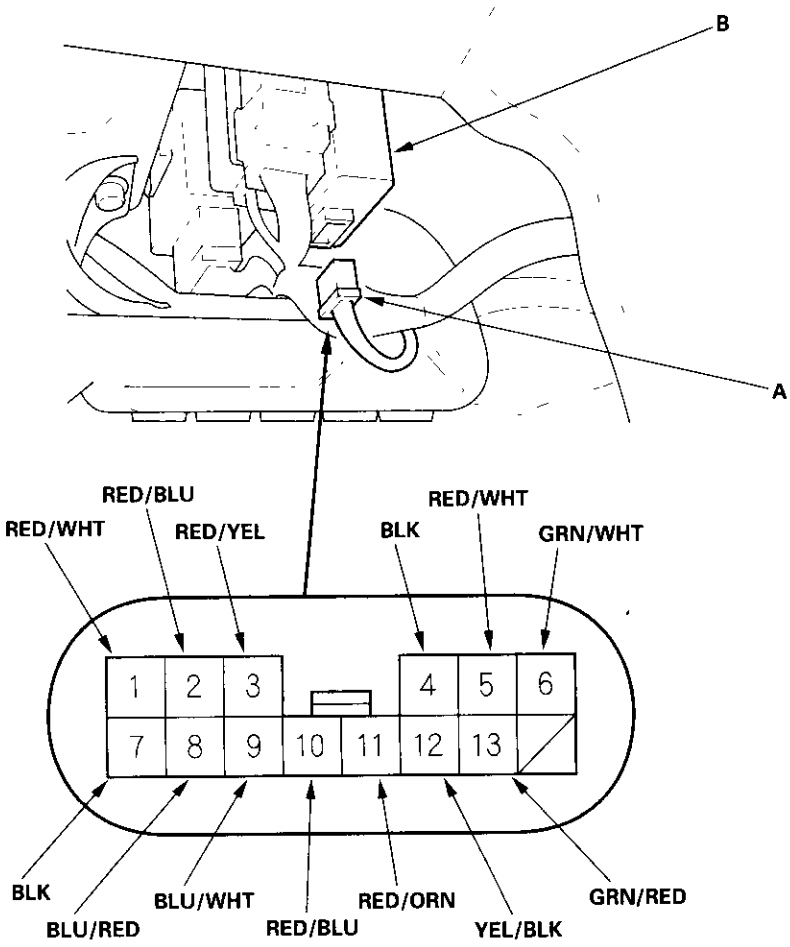


Wire side of female terminals

2. Inspect the connector and socket terminals to be sure they are all making good contact.

   - If the terminals are bent, loose or corroded, repair them as necessary, and recheck the system.
   - If the terminals look OK, go to step 3.

3. Make these input test at the connector.

- If any test indicates a problem, find and correct the cause, then recheck the system.
- If all the input tests prove OK, the control unit must be faulty; replace it.

| Cavity | Wire | Test condition | Test: Desired result | Possible cause if result is not obtained |
|---|---|---|---|---|
| 2 | RED/BLU | Under all conditions | Check for voltage to ground: There should be battery voltage. | • Blown No. 54 (30 A) fuse in the under-hood fuse/relay box<br>• Blown No. 27 (10 A) fuse in the under-dash fuse/relay box<br>• An open in the wire |
| 12 | YEL/BLK | Ignition switch ON (II) | Check for voltage to ground: There should be battery voltage. | • Blown No. 19 (7.5 A) fuse in the under-dash fuse/relay box<br>• Faulty IG2 relay<br>• An open in the wire |
| 4 | BLK | Under all conditions | Check for continuity to ground: There should be continuity. | • Poor ground (G402)<br>• An open in the wire |
| 7 | BLK | Under all conditions | Check for continuity to ground: There should be continuity. | • Poor ground (G402)<br>• An open in the wire |
| 3 | RED/YEL | Combination light switch ON (≡D) | Check for voltage to ground: There should be battery voltage. | • Blown No. 45 (20 A) fuse in the under-hood fuse/relay box<br>• Faulty headlight relay 2<br>• Faulty combination light switch<br>• An open in the wire |
| 5 | RED/WHT | Combination light switch ON (≡D) | Check for voltage to ground: There should be battery voltage. | • Blown No. 43 (20 A) fuse in the under-hood fuse/relay box<br>• Faulty headlight relay 1<br>• Faulty combination light switch<br>• An open in the wire |
| 1 | RED/WHT | Combination light switch ON (≡D), and dimmer switch in HIGH | Connect a jumper wire between No. 3 and No. 1 terminals. Left headlight (HIGH) and high beam indicator light should come on. | • Blown bulb<br>• Faulty high beam cut relay<br>• Faulty combination light switch<br>• Poor ground (G401)<br>• An open in the wire |
| 11 | RED/ORN | Combination light switch ON (≡D), and dimmer switch in HIGH | Connect a jumper wire between No. 5 and No. 11 terminals. Right headlight (HIGH) should come on. | • Blown bulb<br>• Faulty high beam cut relay<br>• Faulty combination light switch<br>• Poor ground (G401)<br>• An open in the wire |
| 10 | RED/BLU | Combination light switch ON (≡D), and dimmer switch in HIGH | Check for continuity to ground: There should be continuity. | • Faulty high beam cut relay<br>• Faulty combination light switch<br>• Poor ground (G401)<br>• An open in the wire |
| 6 | GRN/WHT | Parking brake lever up | Check for continuity to ground: There should be continuity. | • Faulty parking brake switch<br>• An open in the wire |
| 8 | BLU/RED | Under all conditions | Check for voltage to ground: There should be battery voltage. | • Faulty headlight relays<br>• An open in the wire |
| 9 | BLU/WHT | Ignition switch ON (II) | Attach to ground: The DRL indicator light should come on. | • Blown bulb<br>• An open in the wire |
| 13 | GRN/RED | Ignition switch ON (II) | Attach to ground: The brake system light should come on. | • Blown bulb<br>• An open in the wire |

## HID Lamp System Troubleshooting

**⚠CAUTION**

Never turn on the combination light switch before fitting the HID bulbs to their bulb sockets and completing the reassembly of the headlight assembly.

1. Check the No. 43 (20 A) and No. 45 (20 A) fuse in the main under-hood fuse/relay box.

   *Are the fuses OK?*

   **YES** – Go to step 2.

   **NO** – Replace the fuse (s), and recheck.■

2. Substitute a known-good HID bulb and recheck.

   *Does the headlight low beam come on?*

   **YES** – Replace the HID bulb.■

   **NO** – Go to step 3.

3. Turn the combination light switch ON.

4. Measure the voltage between the No. 2 terminal of the inverter unit 2P connector and body ground.

**INVERTER UNIT 2P CONNECTOR**

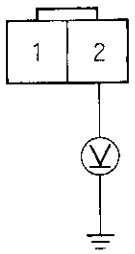


Wire side of female terminals

*Is there battery voltage?*

**YES** – Go to step 5.

**NO** – Repair open in the wire between the under-hood fuse/relay box and the inverter unit.■

5. Check for voltage between the No. 1 terminal of the inverter unit 2P connector and body ground.

**INVERTER UNIT 2P CONNECTOR**

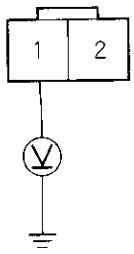


Wire side of female terminals

*Is there less than 1 V?*

**YES** – Substitute a known-good inverter, and recheck. If the symptom/indication goes away, replace the original inverter unit.■

**NO** – Repair open in the wire between the inverter unit and body ground. If the wire is OK, check for poor ground at G201 or G301.■

## HID Bulb Removal

**⚠WARNING**

A transient high tension (25,000 V) occurs at the bulb sockets of the high intensity discharge (HID) lamps when the combination light switch is turned ON. It may cause serious electrical shock or electrocution if you do not observe the cautions below.

**⚠CAUTION**

- Never turn on the combination light switch before fitting the HID bulbs to their bulb sockets and completing the reassembly of the headlight assembly.
- Do not service the headlights assembly in wet conditions, such as rain or snow, near a sprinkler system, or when your hands are wet to prevent electrocution.
- Do not touch the surface of the HID bulbs with your bare hands and do not stain it with any oils and fats.
- Do not disassemble the inverter unit and the igniter unit.
- Do not turn on the HID bulb by using a power source other than the battery mounted in your vehicle.

1. Make sure you have the anti-theft code for the radio, then write down the frequencies for the radio's preset buttons.
2. Turn the combination light switch OFF.
3. Disconnect the battery negative cable, then disconnect the positive cable.
4. Remove the front part of the inner fender as necessary (see page 20-105).
5. Disconnect 2P connector (A) from the inverter unit.

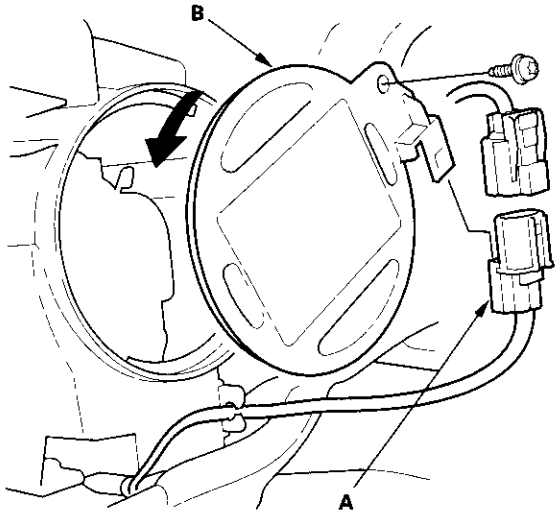


6. Remove the Torx bolt using a tamper-proof Torx T25 bit.
7. Turn the cover (B) 45° counterclockwise to remove it from the headlight assembly.

(cont'd)

## HID Bulb Removal (cont'd)

8. Pull the retaining spring (A) away from the bulb (B), then remove the socket and the bulb (C).

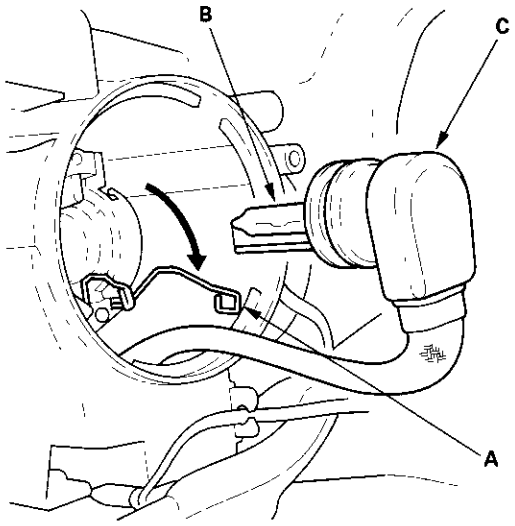


9. Turn the bulb 45° counterclockwise to remove it from the socket.

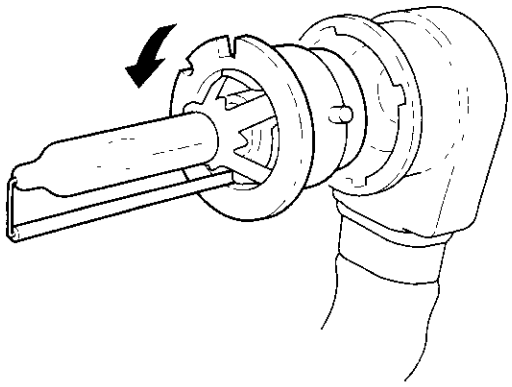

10. Install the new bulb in the reverse order of removal.

11. After reconnecting the battery, enter the anti-theft code for the radio, then enter the customer's radio station presets.

## Headlight Replacement

**⚠CAUTION**

Headlights become very hot during use; do not touch them or any attaching hardware immediately after they have been turned off.

1. Remove the front bumper (see page 20-92).
2. Remove the front part of the inner fender as necessary (see page 20-105).
3. Disconnect the connectors (A) from the headlights.

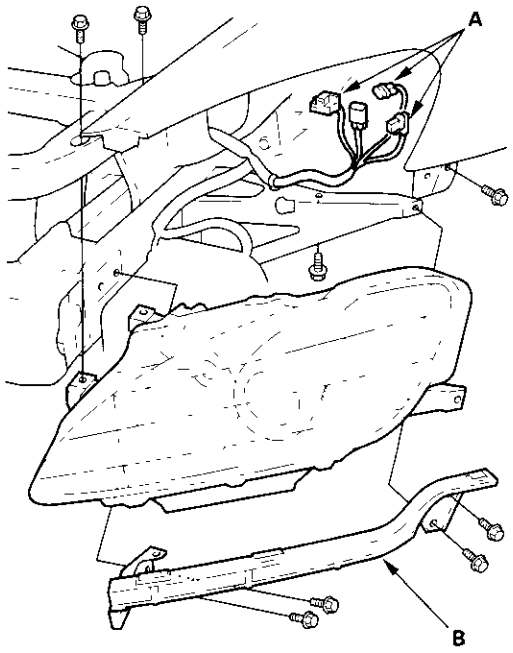


4. Remove the four bolts, then remove the corner upper beam (B).

| | |
|---|---|
| **Headlight (High):** | **55 W** |
| **Headlight (Low):** | **35 W** |
| **Front Turn Signal Light:** | **21 W** |
| **Front Parking Light:** | **5 W** |

5. Remove the four bolts, then remove the headlight assembly.
6. Install the headlight in the reverse order of removal.
7. After replacement, adjust the headlights to local requirements (see page 22-72).

## Headlight Adjustment

**⚠CAUTION**

Headlights become very hot during use; do not touch them or any attaching hardware immediately after they have been turned off.

**Before adjusting the headlights:**
- Park the vehicle on a level surface.
- Make sure the tire pressures are correct.
- The driver or someone who weights the same should sit in the driver's seat.

1. Clean the outer lens so that you can see the center of the headlights (A).

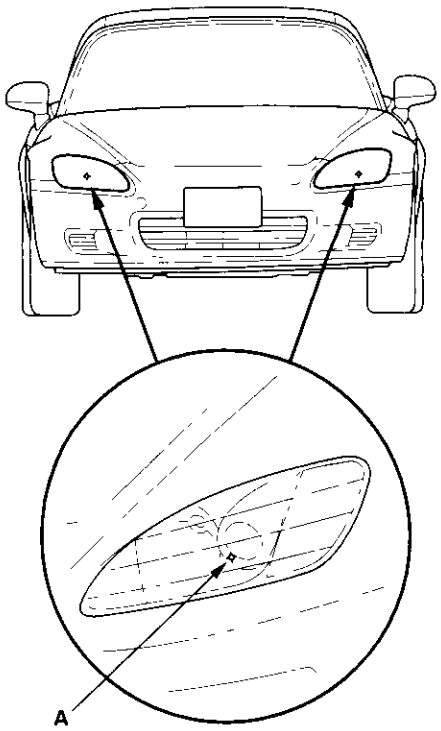


2. Park the vehicle 7.5 m (25 ft) away from a wall or a screen (A).

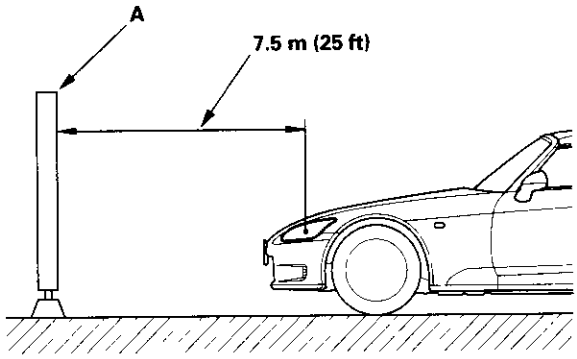


3. Open the hood.

4. Turn the low beams on.

5. Determine if the headlights are aimed properly.

   **Vertical adjustment:**
   Measure the height of the headlights (A). The lights should reflect 52 mm (2.1 in.) below headlight height (B).

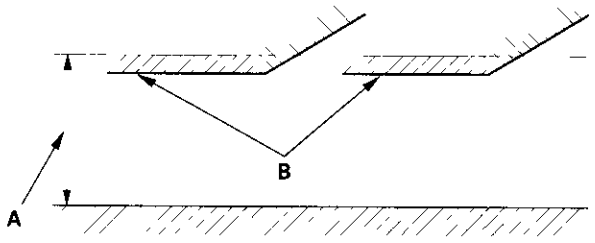


6. If necessary, adjust the headlights to local requirements by turning the vertical adjuster (A).

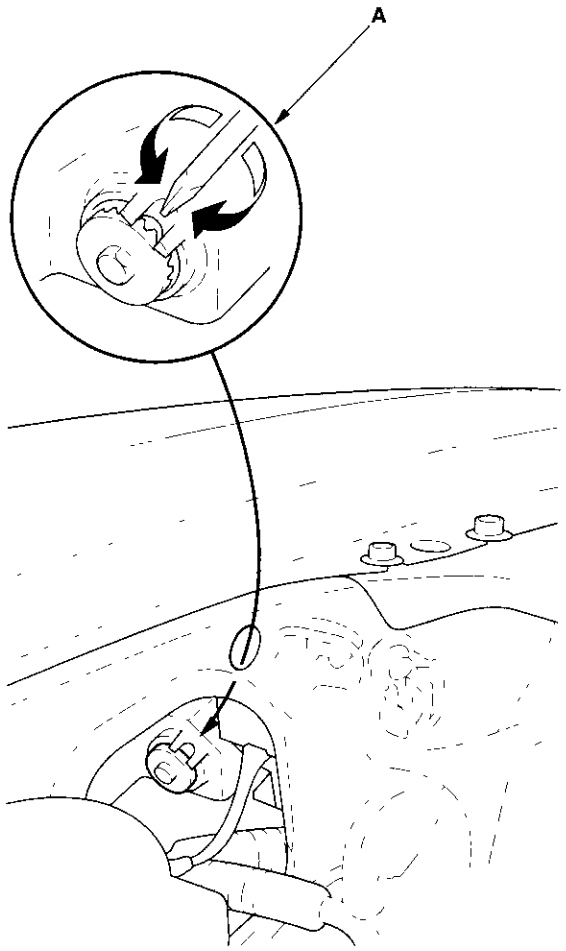

## Side Turn Signal Light Replacement

1. Push the side turn signal light (A) forward, then remove it from the fender.

   **Side Turn Signal Light Bulb: 5 W**

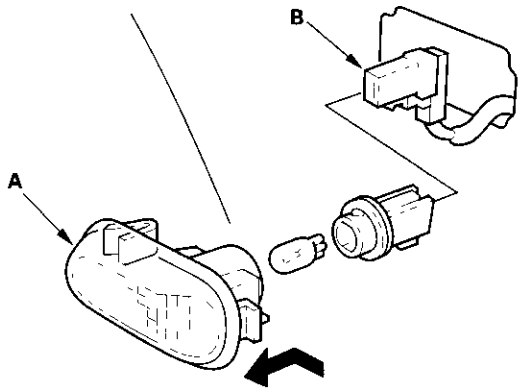


2. Disconnect the 2P connector (B) from the light.

## Taillight Replacement

NOTE: For bulb replacement, see the owner's manual.

1. Open the trunk lid and pull back the trunk trim panel (see page 20-73).

2. Disconnect the connectors (A) from the taillight.

   **Brake/Taillight: 21/5 W**
   **Back-up Light: 21 W**
   **Turn Signal Light: 21 W**
   **Side Marker Light: 5 W**

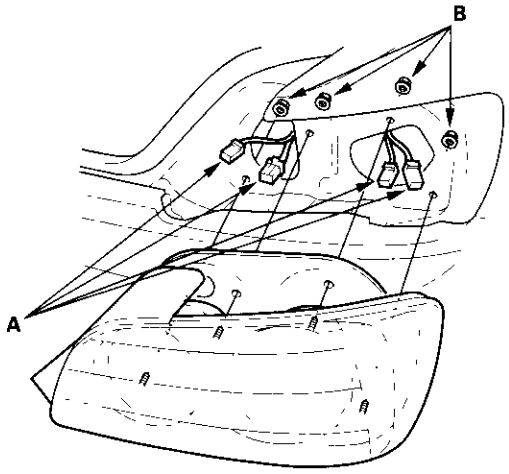


3. Remove the four mounting nuts (B), then pull out the taillight.

4. Before installing the taillight, check the gasket. If it is distorted or stays compressed, replace it.

5. Install the taillight in the reverse order of removal.

6. After installing the taillight, run water over it to make sure it does not leak.

## High Mount Brake Light Replacement

1. Open the trunk lid.
2. Disconnect the 2P connector (A) from the high mount brake light (B).

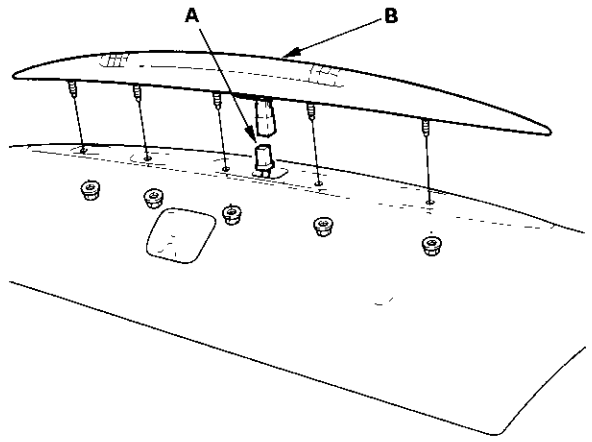


3. Remove the five mounting nuts, then pull out the high mount brake light.
4. Install the high mount brake light in the reverse order of removal.
5. After installing the high mount brake light, run water over it to make sure it does not leak.

## License Plate Light Replacement

1. Remove the license plate light assembly, and disconnect the 2P connector from it.

**License Plate Light Bulb: 5 W**

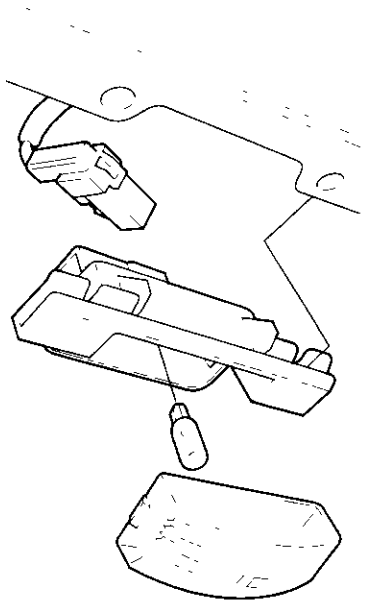

2. Take the lens off, then replace the bulb.

# Turn Signal/Hazard Flasher

## Component Location Index

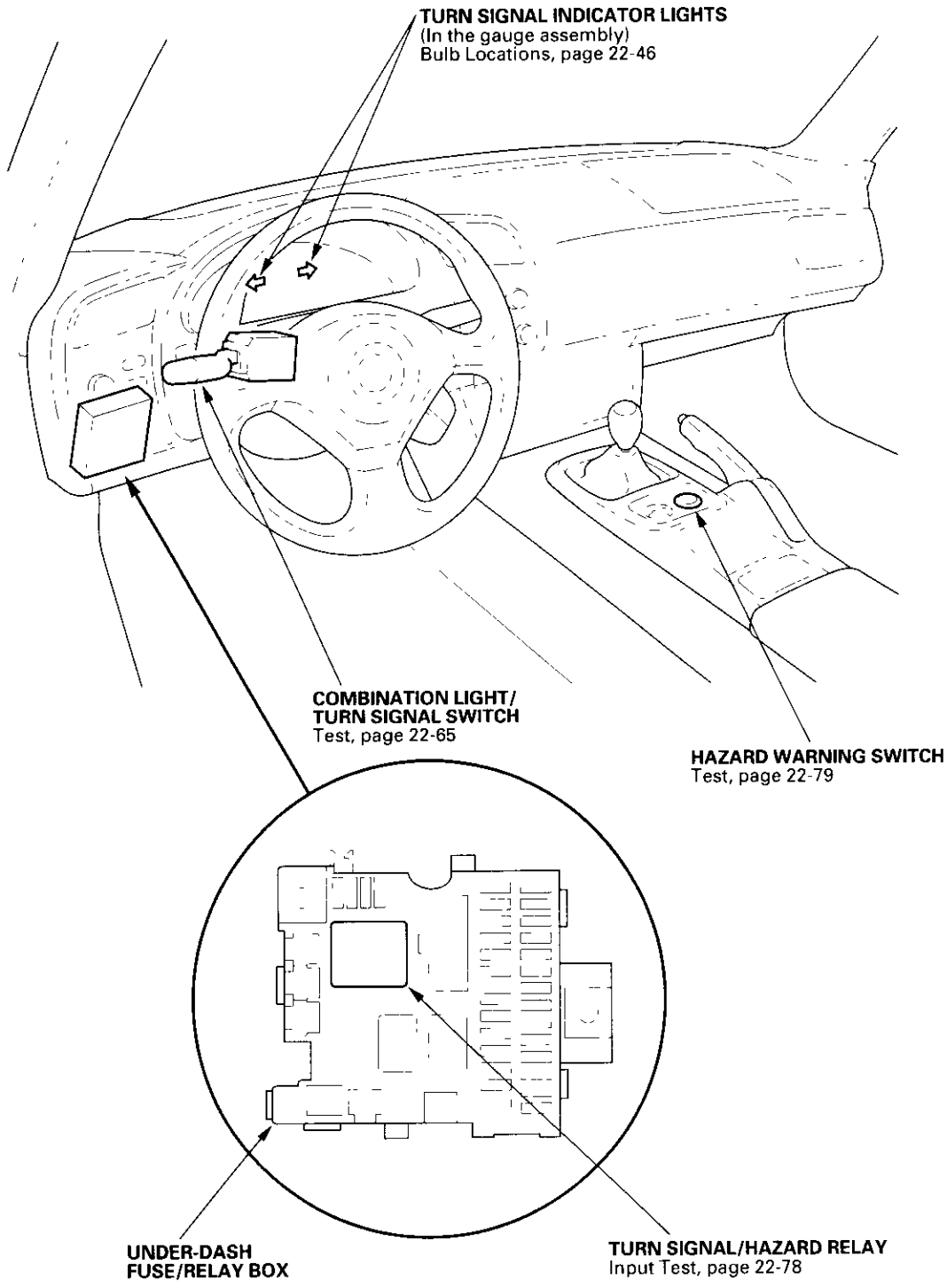

## Circuit Diagram

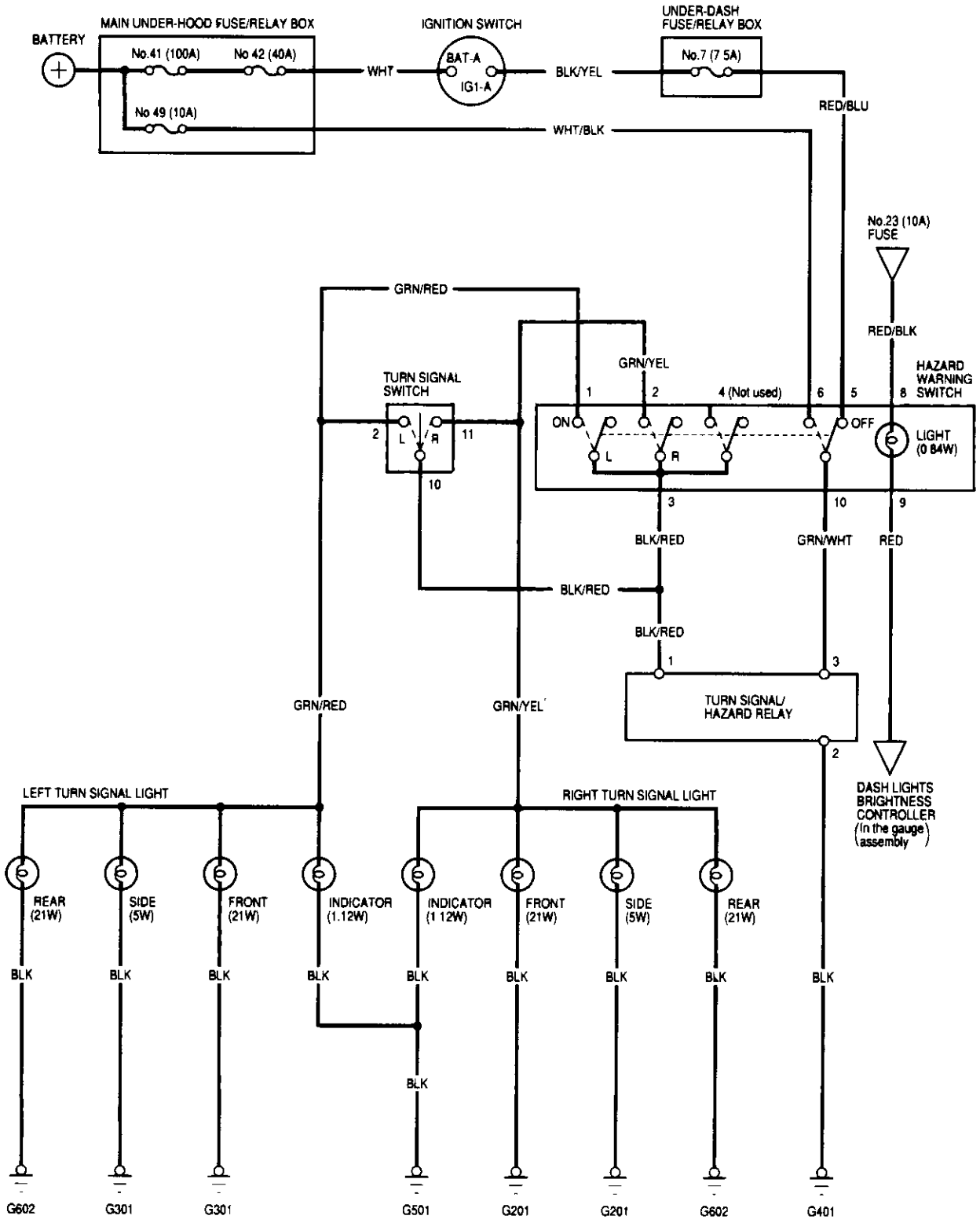

# Turn Signal/Hazard Flasher

## Turn Signal/Hazard Relay Input Test

1. Remove the turn signal/hazard relay (A) from the under-dash fuse/relay box (B).

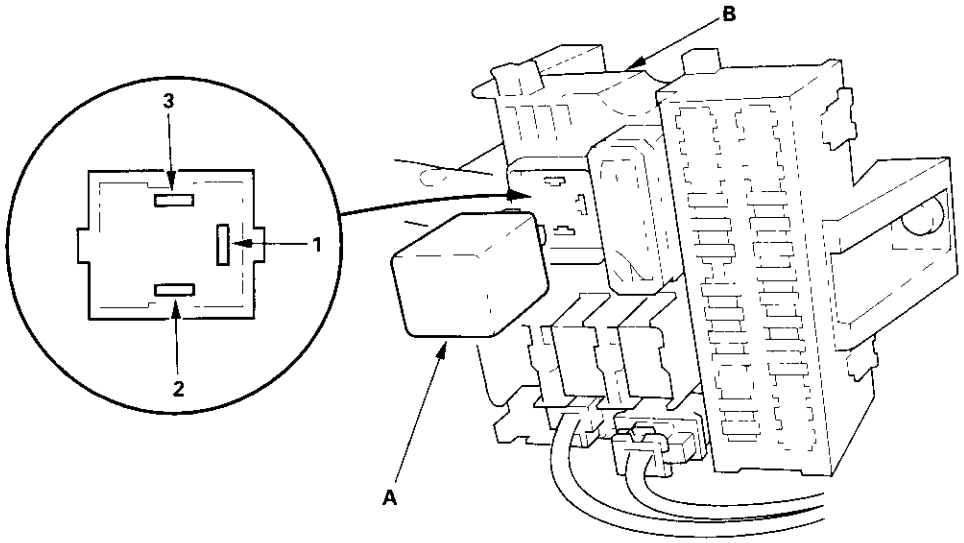


2. Inspect the connector and socket terminals to be sure they are all making good contact.

   - If the terminals are bent, loose, or corroded, repair them as necessary, and recheck the system.
   - If the terminals look OK, go to step 3.

3. Make these input tests at the fuse/relay box.

   - If any test indicates a problem, find and correct the cause, then recheck the system.
   - If all the input tests prove OK, the turn signal/hazard relay must be faulty; replace it.

| Cavity | Test condition | Test: Desired result | Possible cause if result is not obtained |
|---|---|---|---|
| 2 | Under all conditions | Check for continuity to ground: There should be continuity. | • Poor ground (G401)<br>• An open in the wire |
| 3 | Ignition switch ON (II) | Check for voltage to ground: There should be battery voltage. | • Blown No. 7 (7.5 A) fuse in the under-dash fuse/relay box<br>• Faulty hazard warning switch<br>• An open in the wire |
| | Hazard warning switch ON, ignition switch OFF | Check for voltage to ground: There should be battery voltage. | • Blown No. 49 (10 A) fuse in the under-hood fuse/relay box<br>• Faulty hazard warning switch<br>• An open in the wire |
| 1 | Hazard warning switch ON and connect No. 1 and No. 2 terminals | Hazard lights should come on. | • Poor ground (G201, G301, G501, G602)<br>• Faulty hazard warning switch<br>• Faulty turn signal switch<br>• An open in the wire |
| | Ignition switch ON (II) and connect No. 1 and No. 2 terminals; turn signal switch in right or left position. | Right or left turn signal lights should come on. | |

## Hazard Warning Switch Test

1. Remove the center console (see page 20-76).
2. Disconnect the 10P connector (A) from the hazard warning switch (B).

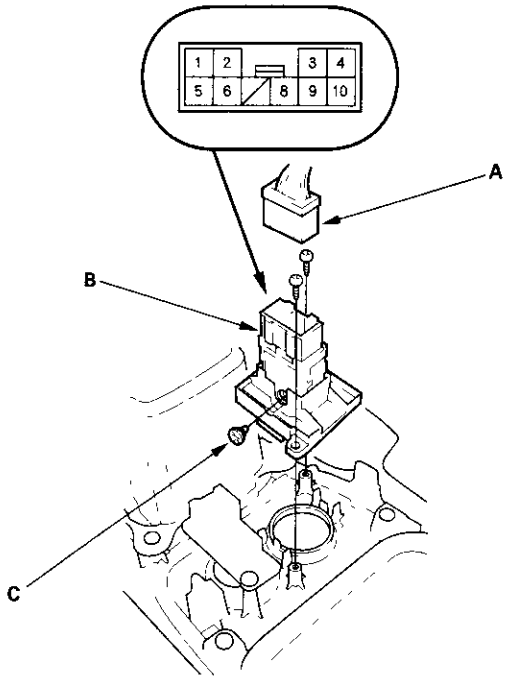


3. Remove the two screws and the hazard warning switch.
4. Check for continuity between the terminals in each switch position according to the table.

| Terminal / Position | 1 | 2 | 3 | 4 | 5 | 6 | 8 | | 9 | 10 |
|---|---|---|---|---|---|---|---|---|---|---|
| OFF | | | | | ○ | | ○ | ⊕ | ○ | ○ |
| ON | ○ | ○ | ○ | ○ | | ○ | ○ | ⊕ | ○ | ○ |

5. If the continuity is not as specified, replace the illumination bulb (C) or the switch.

## Component Location Index

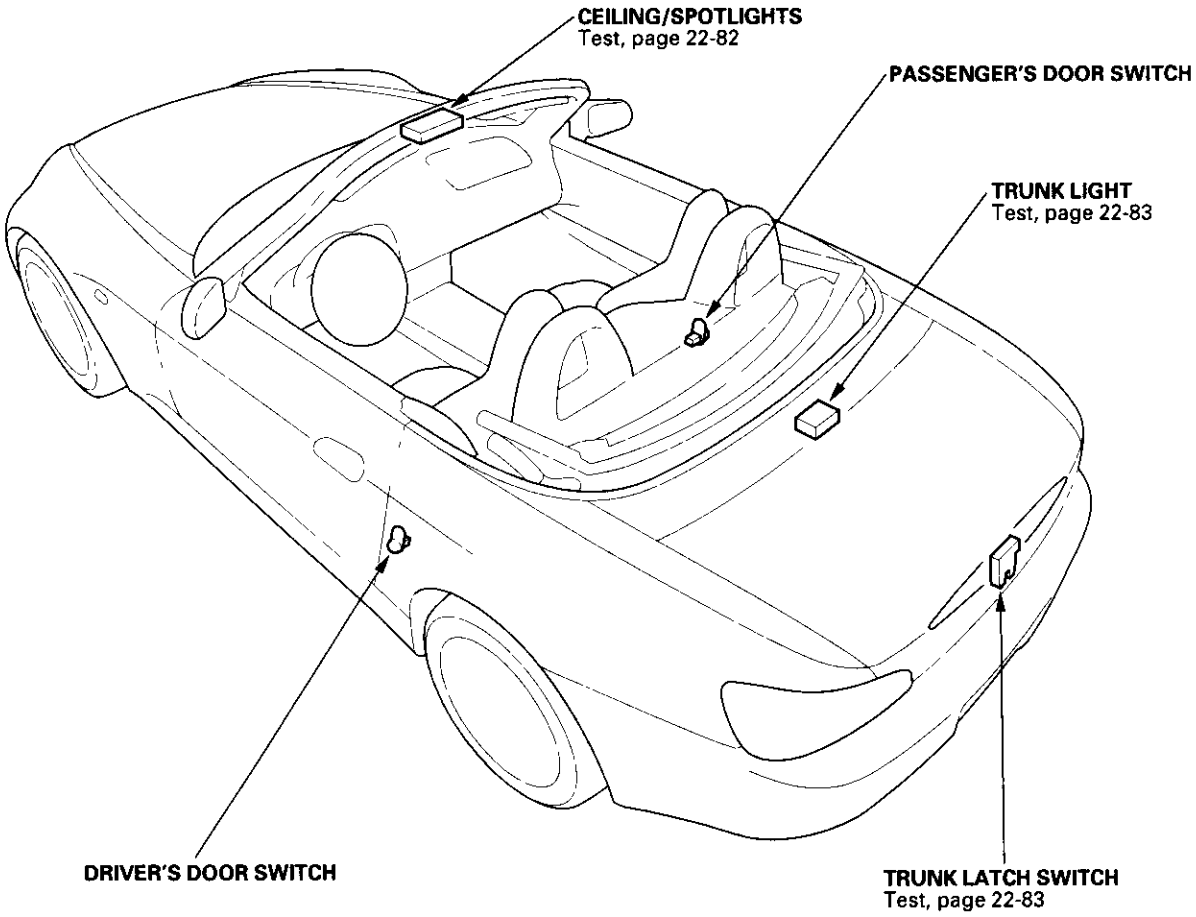

## Circuit Diagram

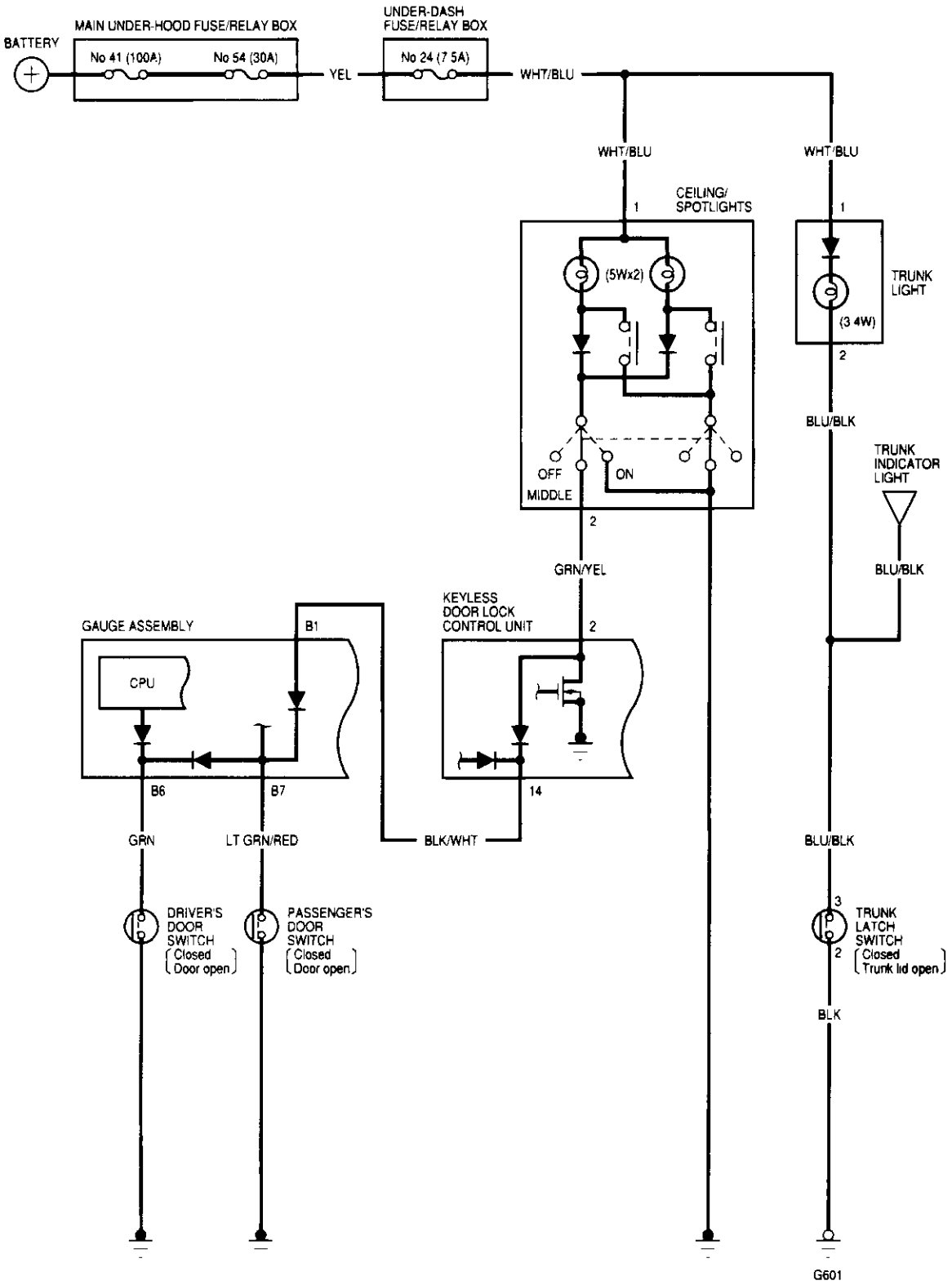

## Ceiling/Spotlight Test

1. Turn the ceiling/spotlights switch OFF.
2. Pry off the lens (A).

**Ceiling/Spotlight Bulb: 5W**

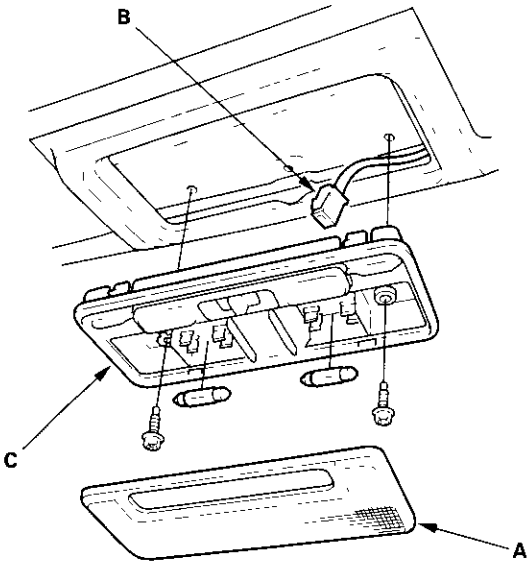


3. Remove the two screws and the ceiling/spotlight housing.
4. Disconnect the 4P connector (B) from the housing (C).
5. Check for continuity between the terminals in each switch position according to the table.

| Position | | | Terminal 1 | | 2 | BODY GROUND |
|---|---|---|---|---|---|---|
| CEILING LIGHT | OFF | | | | | |
| | MIDDLE | | ○ | ⊗ | ○ | |
| | ON | | ○ | ⊗ | | ○ |
| SPOTLIGHTS | R | ON | ○ | ⊗ | | ○ |
| | | OFF | | | | |
| | L | ON | ○ | ⊗ | | ○ |
| | | OFF | | | | |

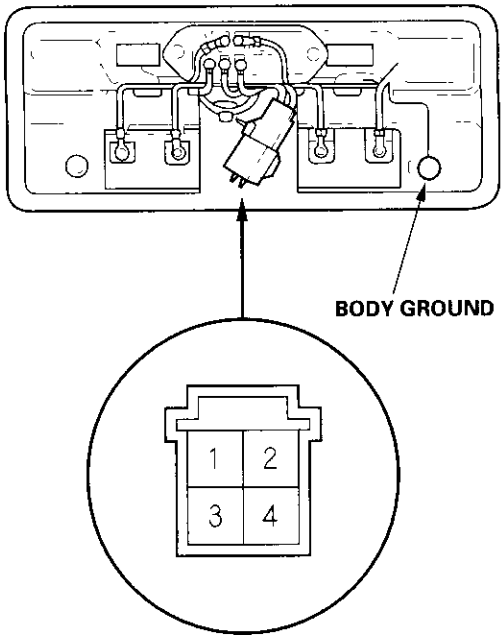


6. If the continuity is not as specified, replace the bulbs or the light.

## Trunk Light Test

1. Open the trunk lid.
2. Pry out the trunk light assembly.

   **Trunk Light Bulb: 5W**

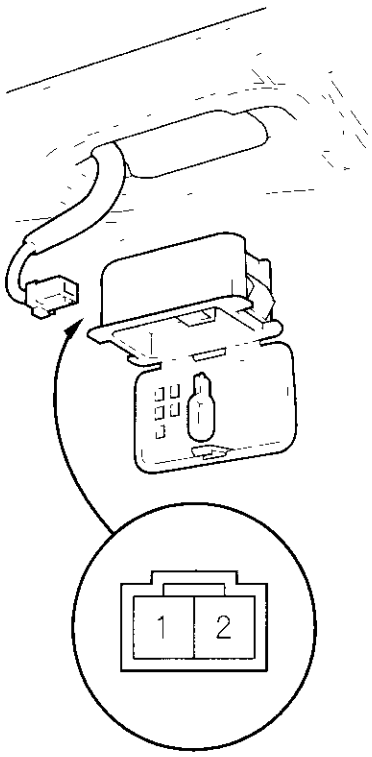


3. Disconnect the 2P connector from the housing.
4. Open the trunk light cover.
5. Check for continuity between the No. 1 and No. 2 terminals.
6. If there is no continuity, replace the bulb or the light.

## Trunk Lid Latch Switch Test

1. Open the trunk lid.
2. Disconnect the 3P connector from the trunk latch.

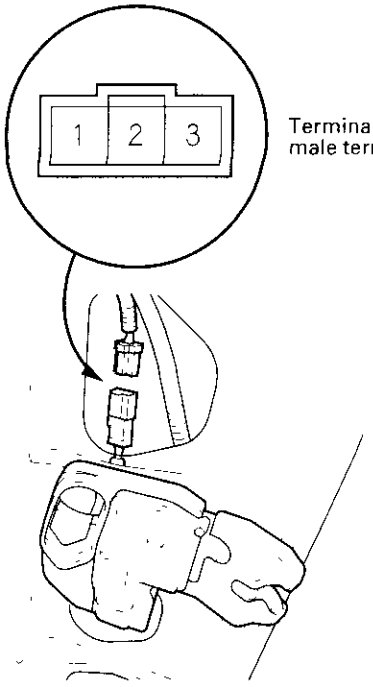


3. Check for continuity between the terminals in each trunk lid position according to the table.

| Terminal / Position | 2 | 3 |
|---|---|---|
| OPEN | ○ | ○ |
| CLOSED | | |

4. If the continuity is not as specified, replace the trunk latch.

# Dash Lights Brightness Controller

## Circuit Diagram

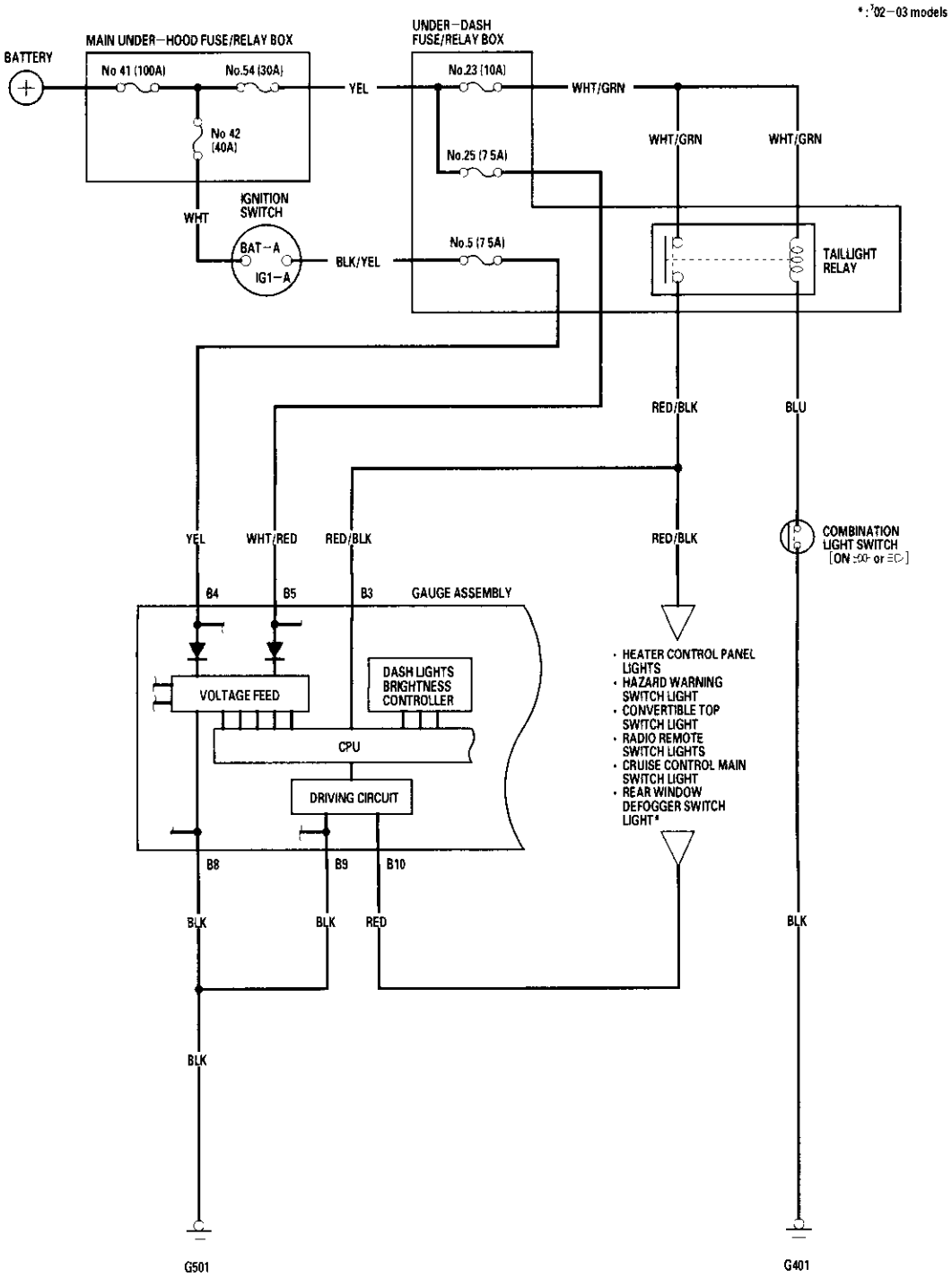

## Controller Input Test

1. Remove the gauge assembly (see page 22-52).

2. Inspect the gauge assembly connector B (12P) terminals to be sure they are all making good contact.

   - If the terminals are bent, loose, or corroded, repair them as necessary, and recheck the system.
   - If the terminals look OK, go to step 3.

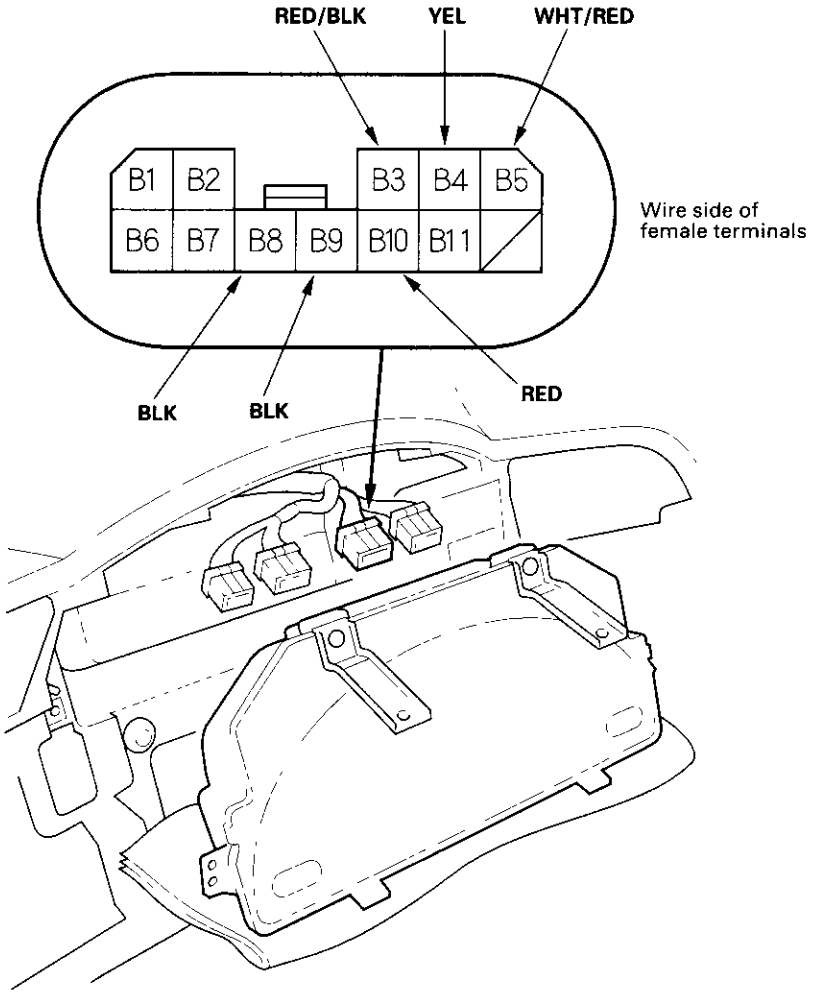


(cont'd)

## Controller Input Test (cont'd)

3. Reconnect the connectors to the gauge assembly.

4. Back probe the connector and make these input tests.

   - If any test indicates a problem, find and correct the cause, then recheck the system.
   - If all the input tests prove OK, the controller switch board or the main printed circuit board in the gauge assembly must be faulty; replace it.

| Cavity | Wire | Test condition | Test: Desired result | Possible cause if result is not obtained |
|---|---|---|---|---|
| B3 | RED/BLK | Combination light switch ON (≡DC≡) or (≡D) | Check for voltage to ground: There should be battery voltage. | • Blown No. 23 (10 A) fuse in the under-dash fuse/relay box<br>• Faulty taillight relay<br>• Faulty combination light switch<br>• Poor ground (G401)<br>• An open in the wire |
| B4 | YEL | Ignition switch ON (II) | Check for voltage to ground: There should be battery voltage. | • Blown No. 5 (7.5 A) fuse in the under-dash fuse/relay box<br>• An open in the wire |
| B5 | WHT/RED | Under all conditions | Check for voltage to ground: There should be battery voltage. | • Blown No. 25 (7.5 A) fuse in the under-dash fuse/relay box<br>• An open in the wire |
| B8 | BLK | Under all conditions | Check for voltage to ground: There should be less than 1 V. | • Poor ground (G501)<br>• An open in the wire |
| B9 | BLK | Under all conditions | Check for voltage to ground: There should be less than 1 V. | • Poor ground (G501)<br>• An open in the wire |
| B10 | RED | Combination light switch ON (≡DC≡) or (≡D) | Connect to ground: Dash lights should come on full bright. | • An open in the wire |

## Component Location Index

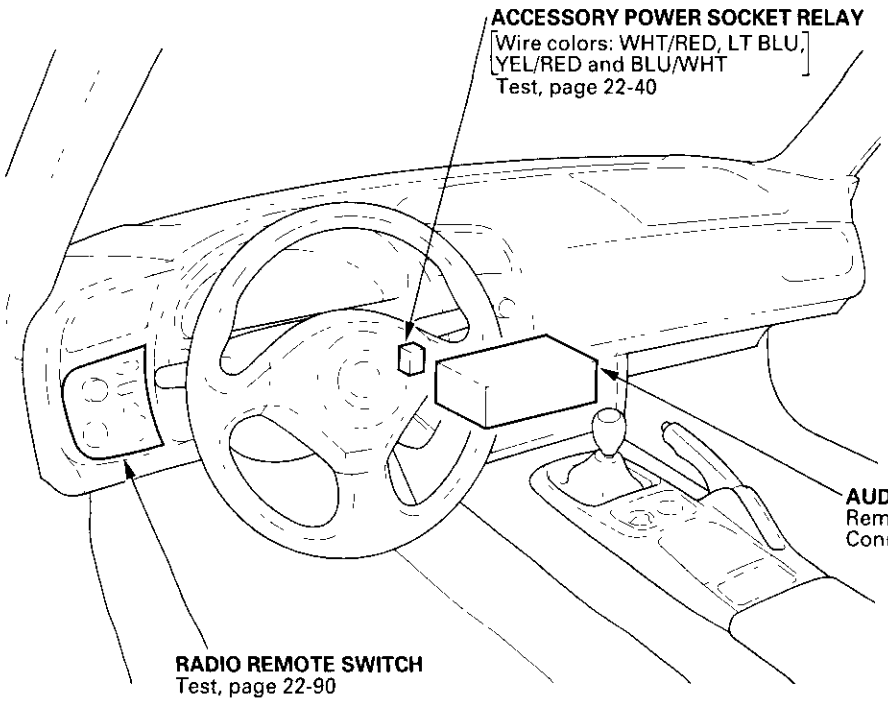


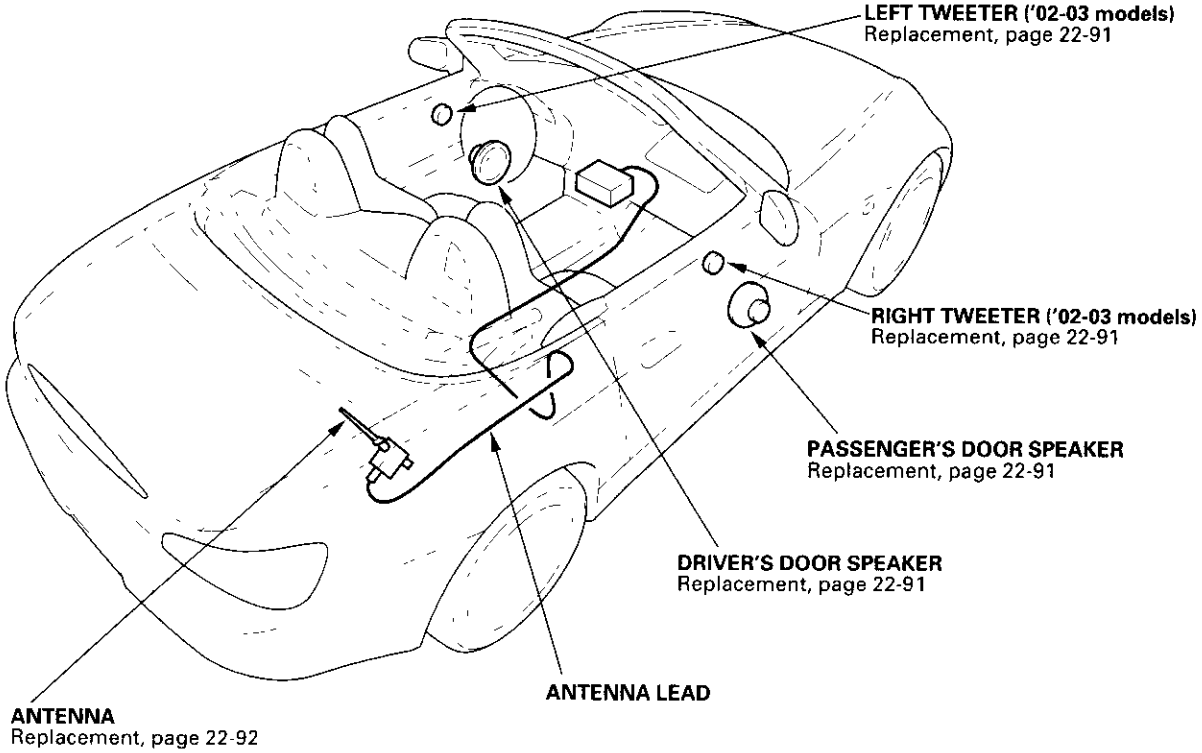

## Circuit Diagram

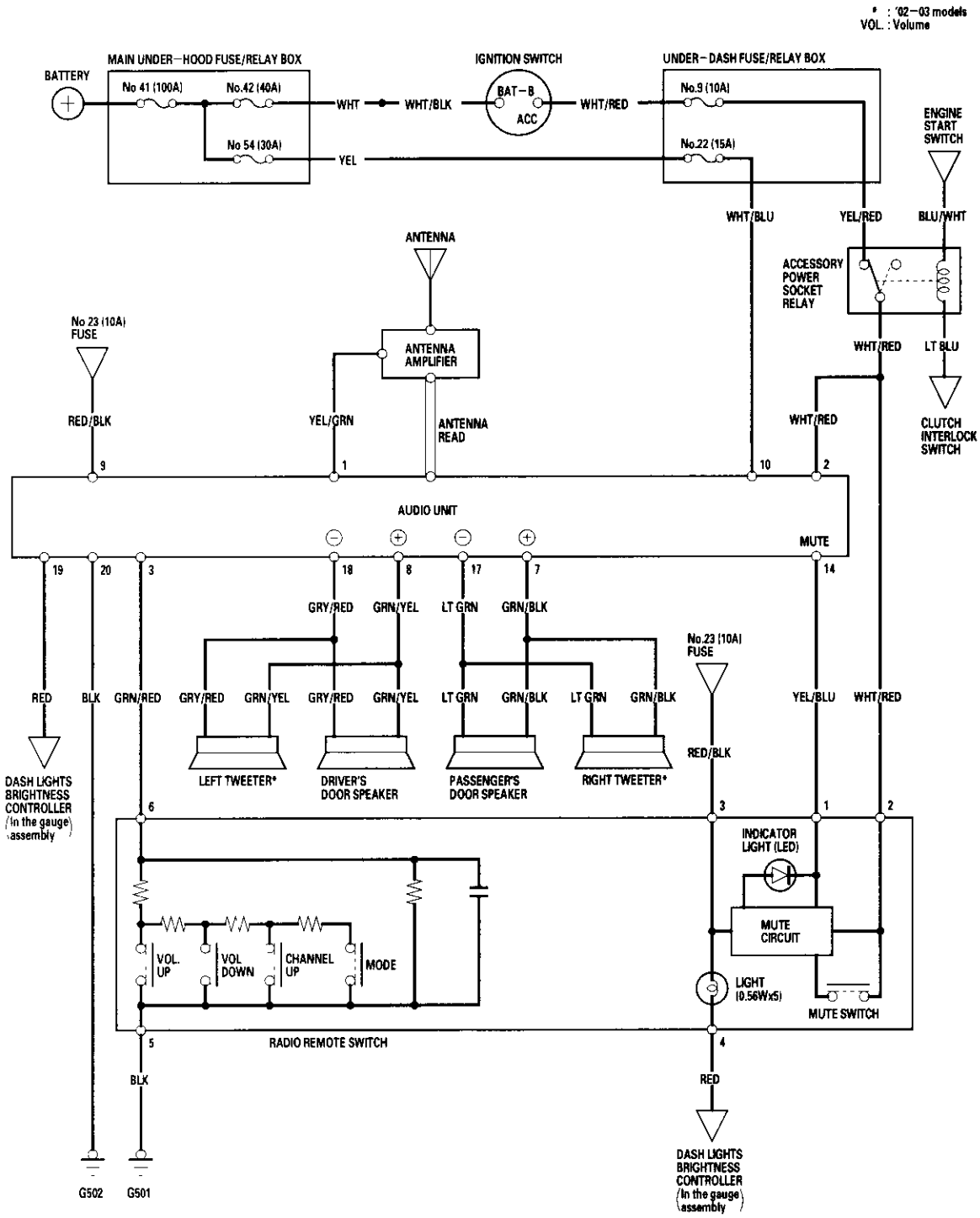

## Audio Unit Removal

1. Make sure you have the anti-theft code for the radio, then write down the frequencies for the radio's preset buttons.
2. Remove the radio panel (see page 20-80).
3. Remove the four mounting screws (A).

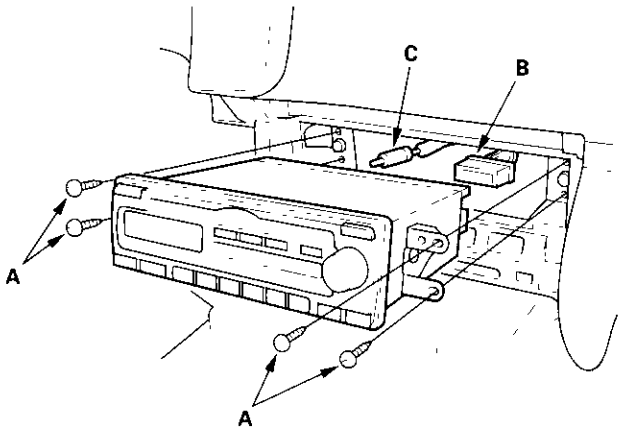


4. Disconnect the 20P connector (B) and antenna lead (C) from the audio unit.
5. Install in the reverse order of removal.
6. Enter the anti-theft code for the radio, then enter the customer's radio station presets.

## Audio Unit Connector Replacement

When replacing an audio unit connector, match the wires to the cavities listed in the following table. Cavities 4, 5, 6, 11, 12, 13, 15 and 16 are not used.

| Cavity | Wire | Connect to |
|---|---|---|
| 1 | YEL/GRN | Antenna amplifier |
| 2 | WHT/RED | ACC (Main stereo power supply) |
| 3 | GRN/RED | Radio remote switch |
| 7 | GRN/BLK | Passenger's door speaker (+), RIGHT Tweeter (+)* |
| 8 | GRN/YEL | Driver's door speaker (+), LEFT Tweeter (+)* |
| 9 | RED/BLK | Lights-on signal |
| 10 | WHT/BLU | Constant power |
| 14 | YEL/BLU | Radio remote switch (MUTE) |
| 17 | LT GRN | Passenger's door speaker (−), RIGHT Tweeter (−)* |
| 18 | GRY/RED | Driver's door speaker (−), LEFT Tweeter (−)* |
| 19* | RED | Dash lights brightness controller |
| 20 | BLK | Ground (G502) |

*: '02-03 models

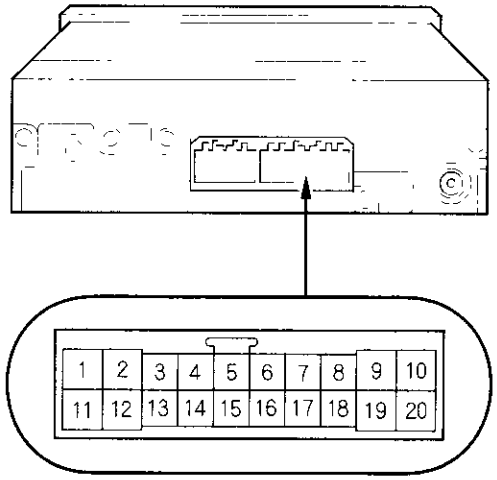

## Radio Remote Switch Test

1. Remove the instrument panel (see page 20-80).
2. Disconnect the 6P connector (A) from the switch.
3. Remove the three mounting screws (B).

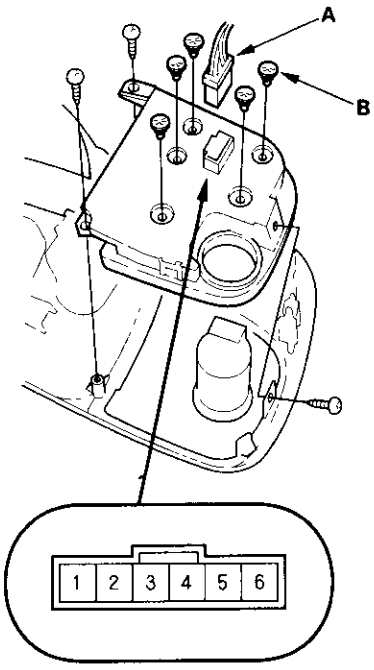


4. Measure resistance between the No. 5 and No. 6 terminals in each switch position according to the table.
   If the resistance is not as specified, replace the switch.

| Position | Resistance |
|---|---|
| OFF | Approx. 10 k Ω |
| VOL. UP (+) | Approx. 307.3 k Ω |
| VOL. DOWN (−) | Approx. 46.8 k Ω |
| CH | Approx. 906.6 k Ω |
| MODE | Approx. 2.6 k Ω |

5. Check for continuity between the terminals in each switch position according to the table.
   If the continuity is not as specified, replace the illumination bulb(s) (B) or the switch.

| Position \ Terminal | 3 | | 4 |
|---|---|---|---|
| COMBINATION LIGHT SWITCH ON | ○ | ⊗ | ○ |
| COMBINATION LIGHT SWITCH OFF | | | |

6. With the MUTE switch ON, check for continuity between the No. 2 (+) and No. 1 (−) terminals. There should be continuity. If there is no continuity, replace the switch.

## Speaker Replacement

### Speaker:

1. Remove the door panel (see page 20-4).
2. Remove the three mounting screws.

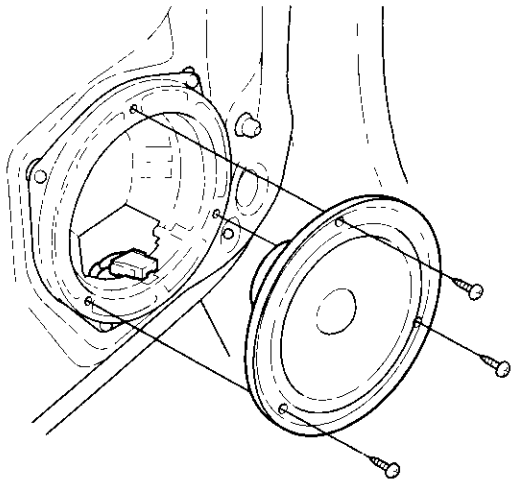

3. Disconnect the 2P connector from the speaker.

### Tweeter ('02-03 models):

1. Remove the door panel (see page 20-4).
2. Remove the two screws.

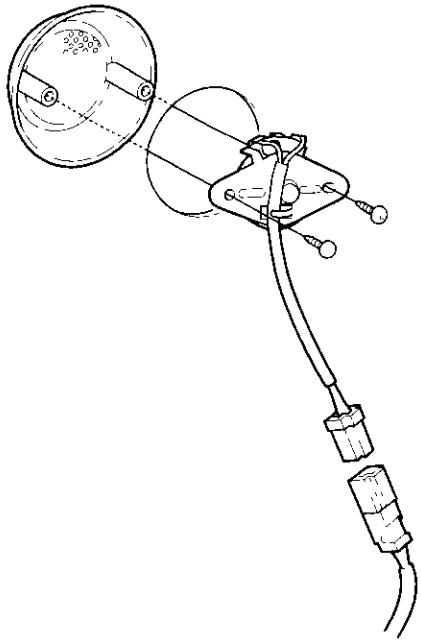

3. Disconnect the 2P connector from the tweeter.

## Mast Antenna Replacement

1. Open the trunk lid.
2. Remove the right side trunk trim panel (see page 20-73).
3. Disconnect the 2P connector from the antenna amplifier.

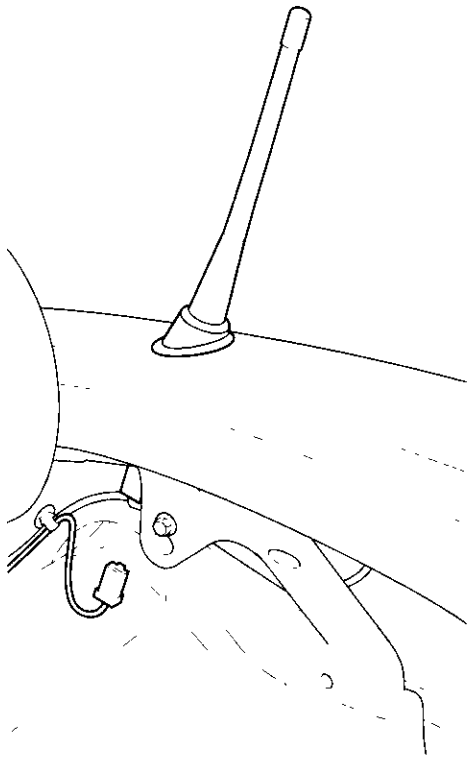

4. Remove the antenna (A).

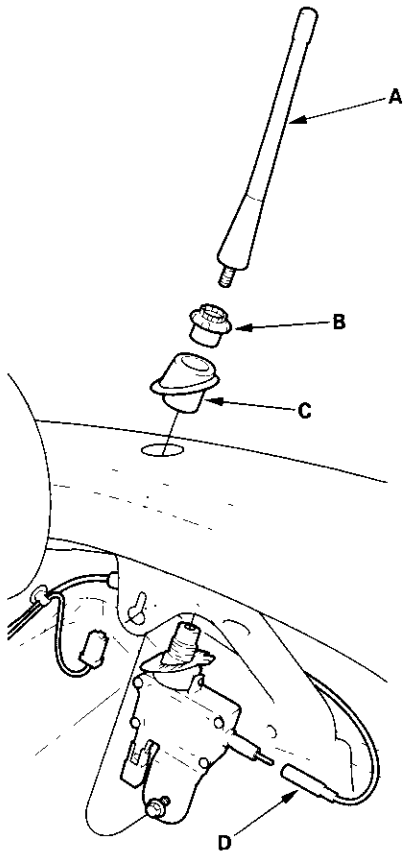


5. Remove the antenna nut (B) and spacer (C).
6. Disconnect the antenna lead (D) from the antenna amplifier.
7. Loosen the mounting bolt from the antenna amplifier.
8. Remove the antenna amplifier.

# Accessory Power Socket

## Component Location Index

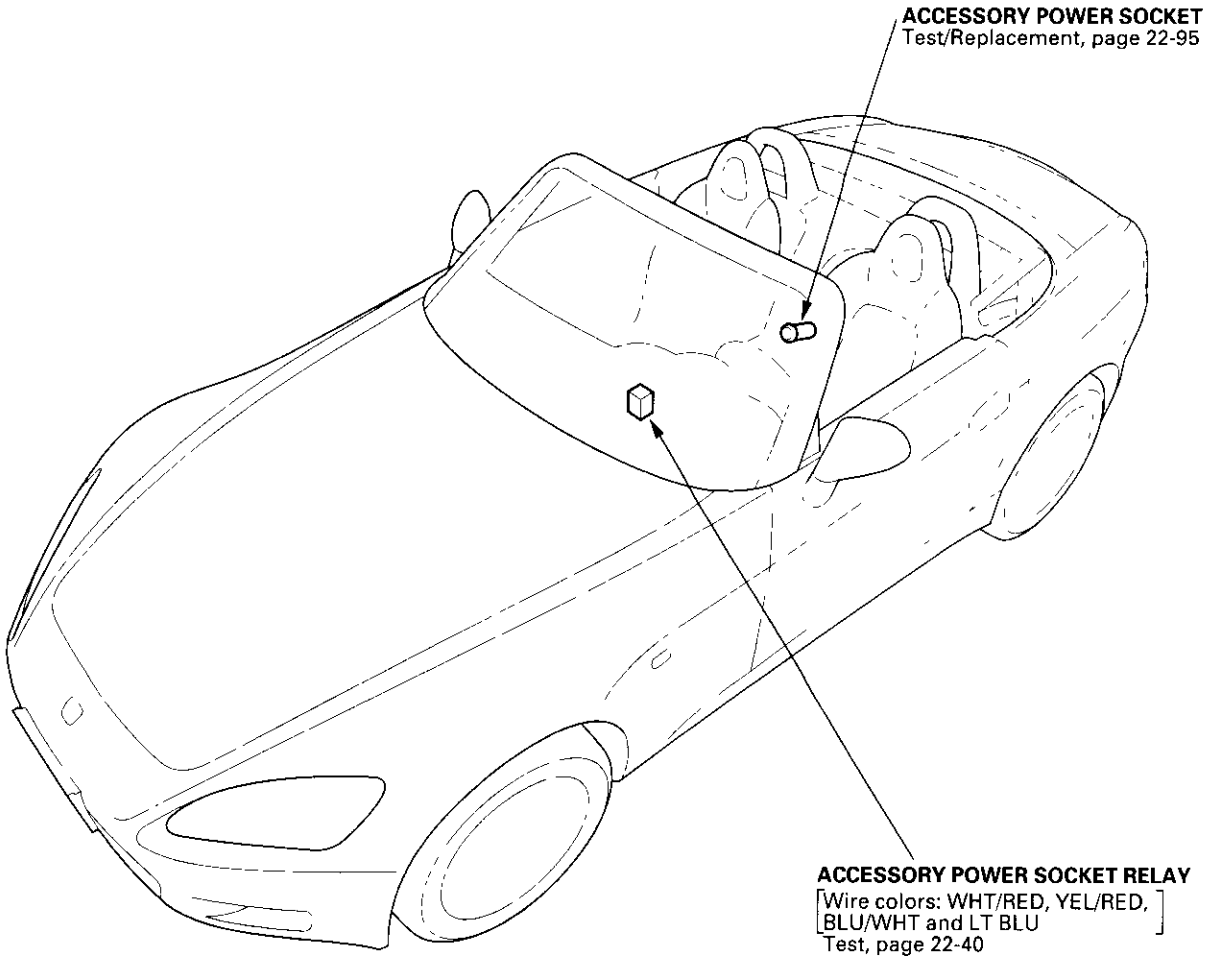

# Accessory Power Socket

## Circuit Diagram

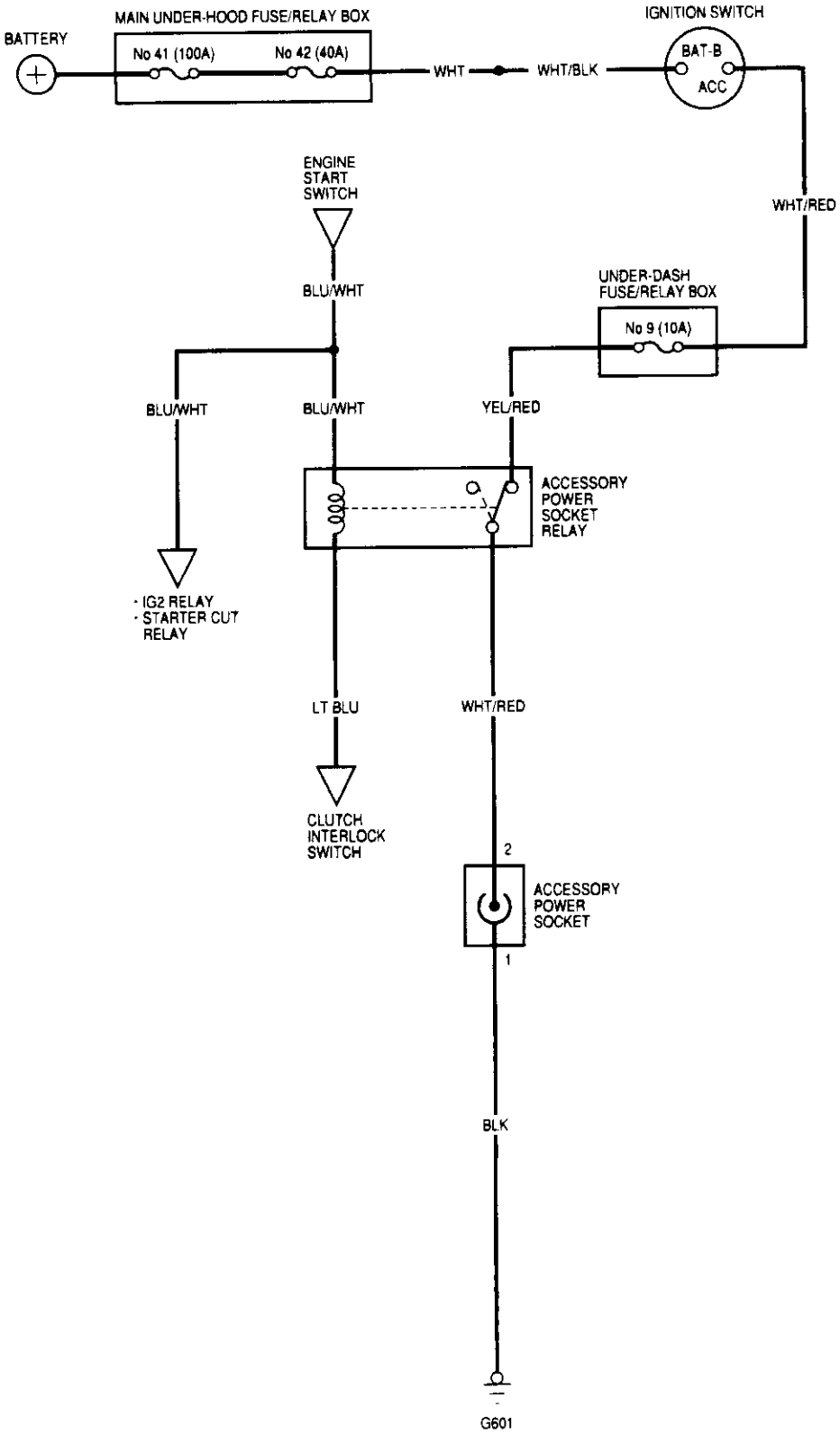

## Test/Replacement

1. Remove the rear console (see page 20-78).
2. Disconnect the 2P connector.
3. Inspect the connector terminals to be sure they are all making good contact.
   - If the terminals are bent, loose or corroded, repair them as necessary, and recheck the system.
   - If the terminals look OK, go to step 4.

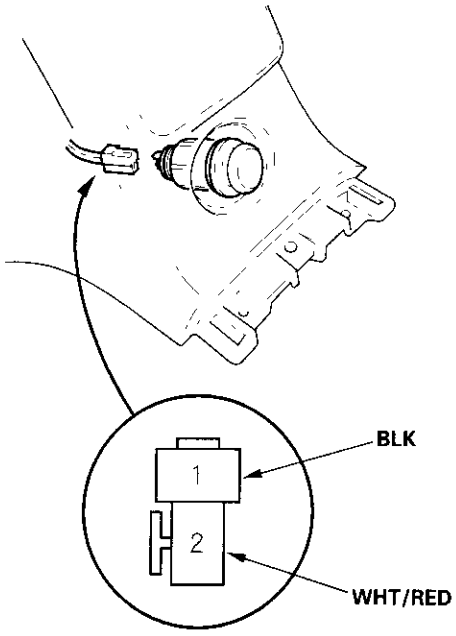


Wire side of female terminals

4. Turn the ignition switch ACC (I), and check for voltage between the No. 1 and No. 2 terminals.
   - There should be battery voltage.
   - If there is no battery voltage, check for:
     - blown No. 9 (10 A) fuse in the under-dash fuse/relay box.
     - faulty accessory power socket relay
     - poor ground (G401, G601)
     - an open in the wire.
5. Remove the housing and socket.

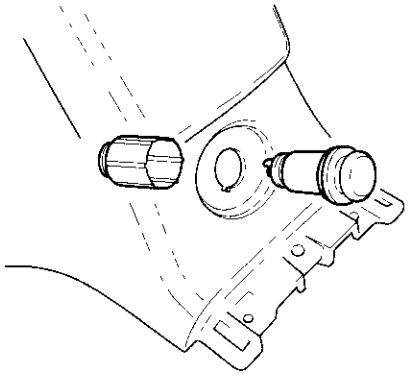

## Component Location Index

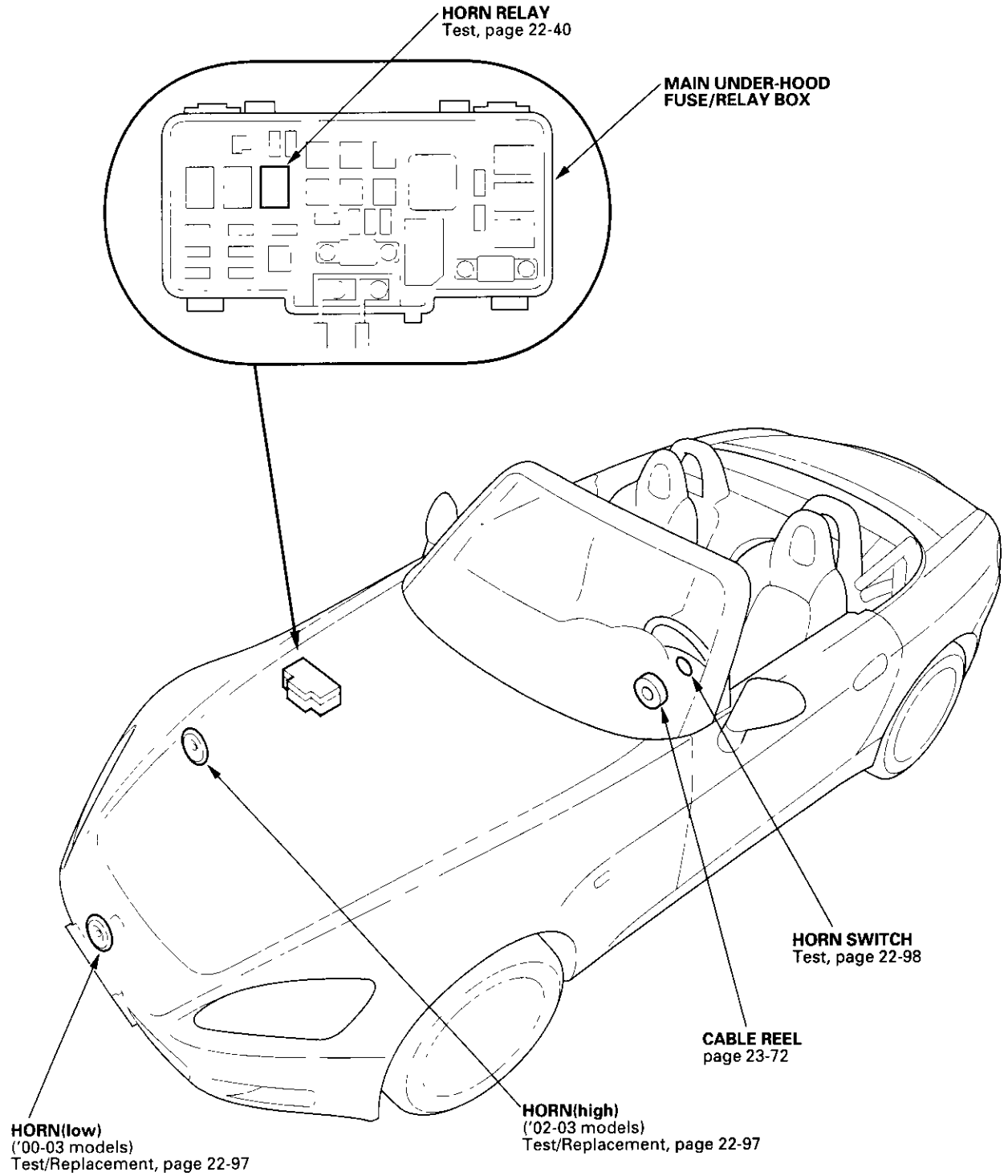

## Circuit Diagram

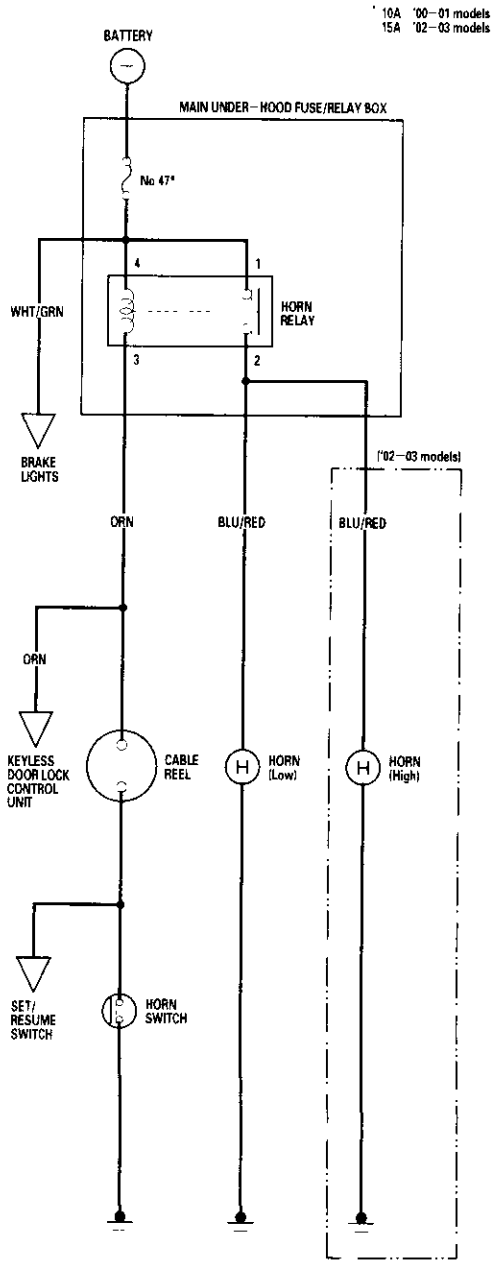


## Horn Test/Replacement

1. Remove the front bumper (see page 20-92) ('00-03 models).
2. Open the hood ('02-03 models).
3. Disconnect the 1P connector (A), and remove the horn (B).

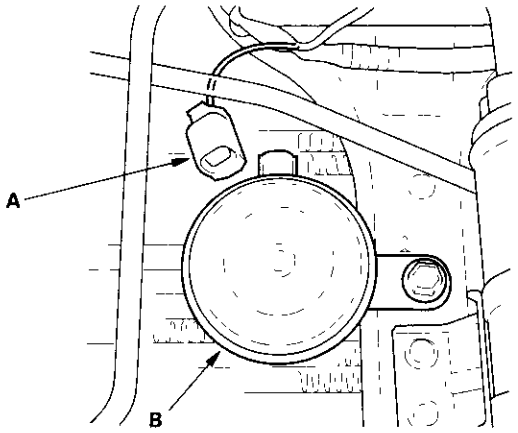


4. Test the horn by connecting battery power to the terminal (A) and grounding to the bracket (B). The horn should sound.

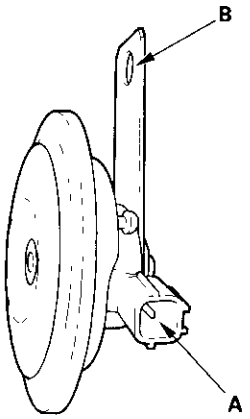


5. If it fails to sound, replace it.

## Horn Switch Test

1. Remove the steering column upper and lower cover (see page 17-9).

2. Disconnect the dashboard wire harness B 4P connector (A) from the cable reel (B).

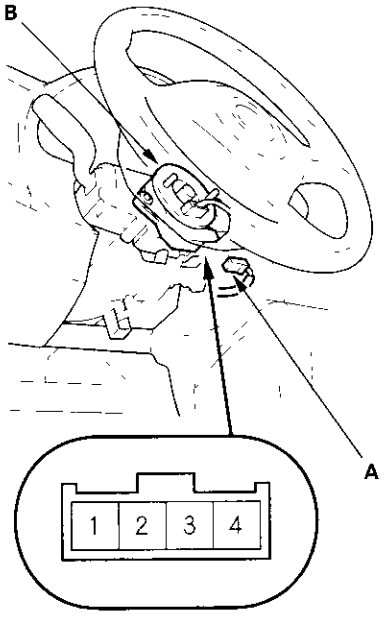


3. Check for continuity between the cable reel No. 2 terminal and body ground in each switch position according to the table.

   - If there is continuity, the horn switch is OK.
   - If there is no continuity, go to step 4.

| Terminal / Position | 2 | Body ground |
|---|---|---|
| Pushed | ○ | ○ |
| Released | | |

4. Remove the driver's airbag (see page 23-65).

5. Check for continuity between the cable reel No. 2 terminal (A) and the horn switch positive terminal (B).

   - If there is no continuity, replace the cable reel (see page 23-72) and check for proper operation.
   - If there is continuity, replace the horn switch.

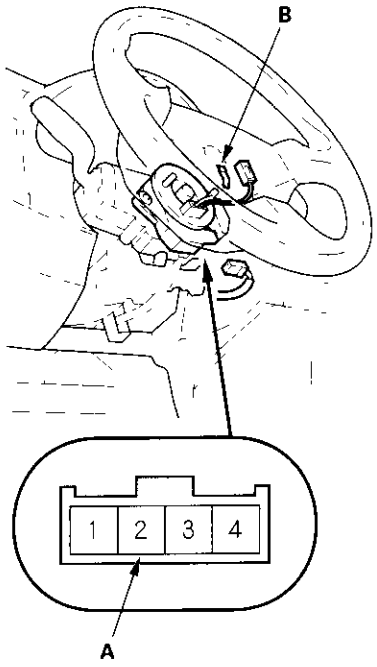

# Trunk Lid Opener

## Component Location Index

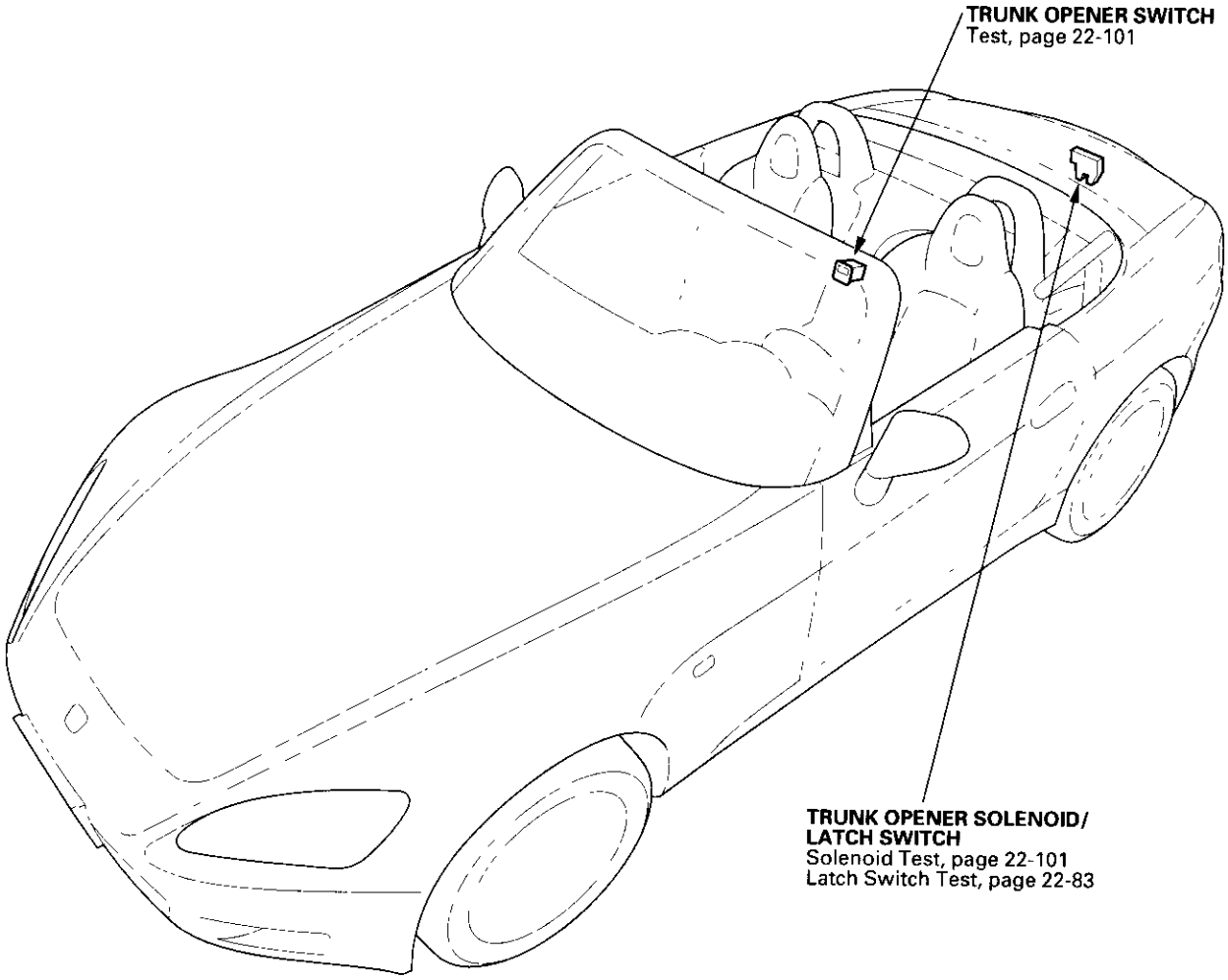

# Trunk Lid Opener

## Circuit Diagram

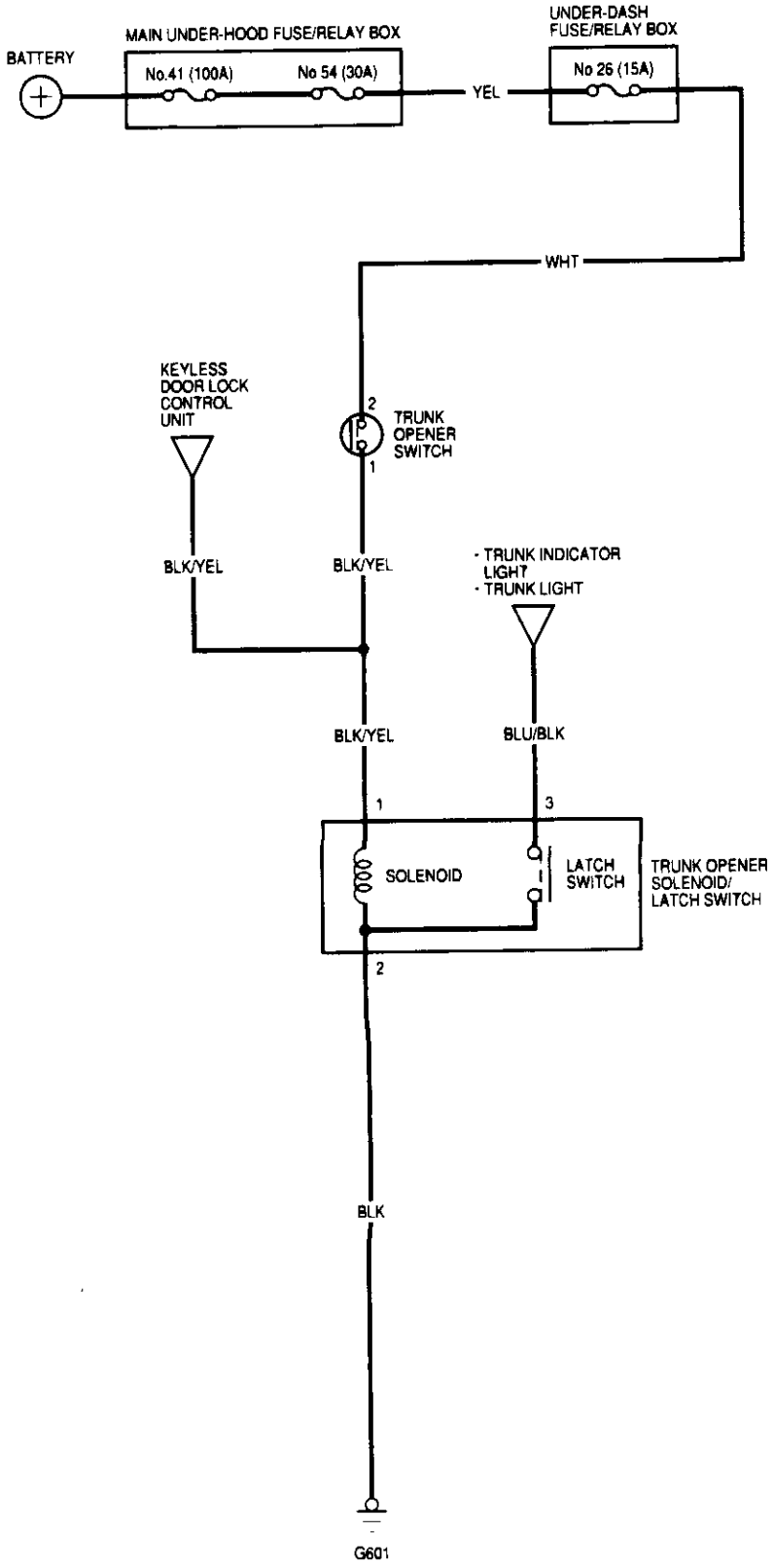

## Trunk Opener Switch Test

1. Remove the rear console (see page 20-78).
2. Disconnect the 2P connector from the switch.

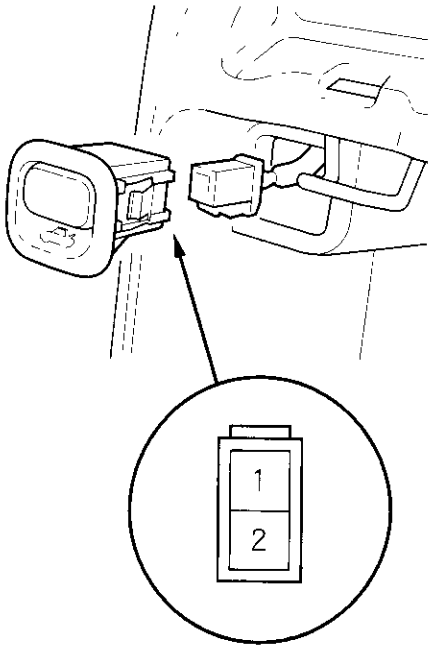


3. Check for continuity between the No. 1 and No. 2 terminals.
   - There should be continuity when the switch is pushed.
   - There should be no continuity when the switch is released.
4. If the continuity check is not as specified, replace the switch.

## Trunk Opener Solenoid Test

1. Open the trunk lid.
2. Disconnect the 3P connector from the trunk latch.

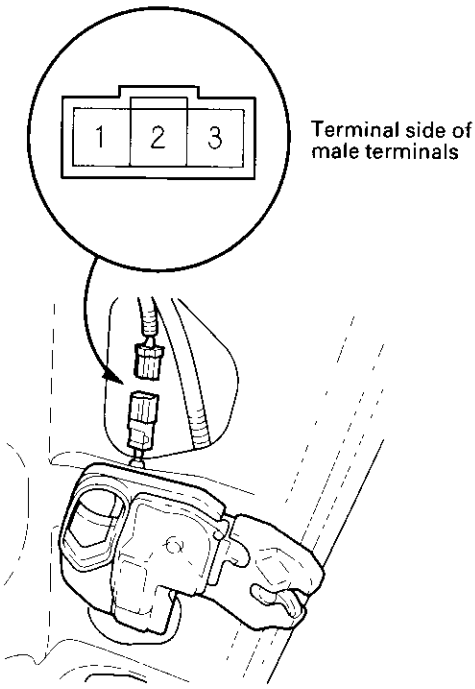


3. Check solenoid operation by connecting power and ground according to the table. To prevent damage to the solenoid, apply battery voltage only momentarily.

| Terminal / Position | 1 | 2 |
|---|---|---|
| UNLOCK | ⊕ | ⊖ |

4. If the solenoid does not operate as specified, replace it.

## Component Location Index

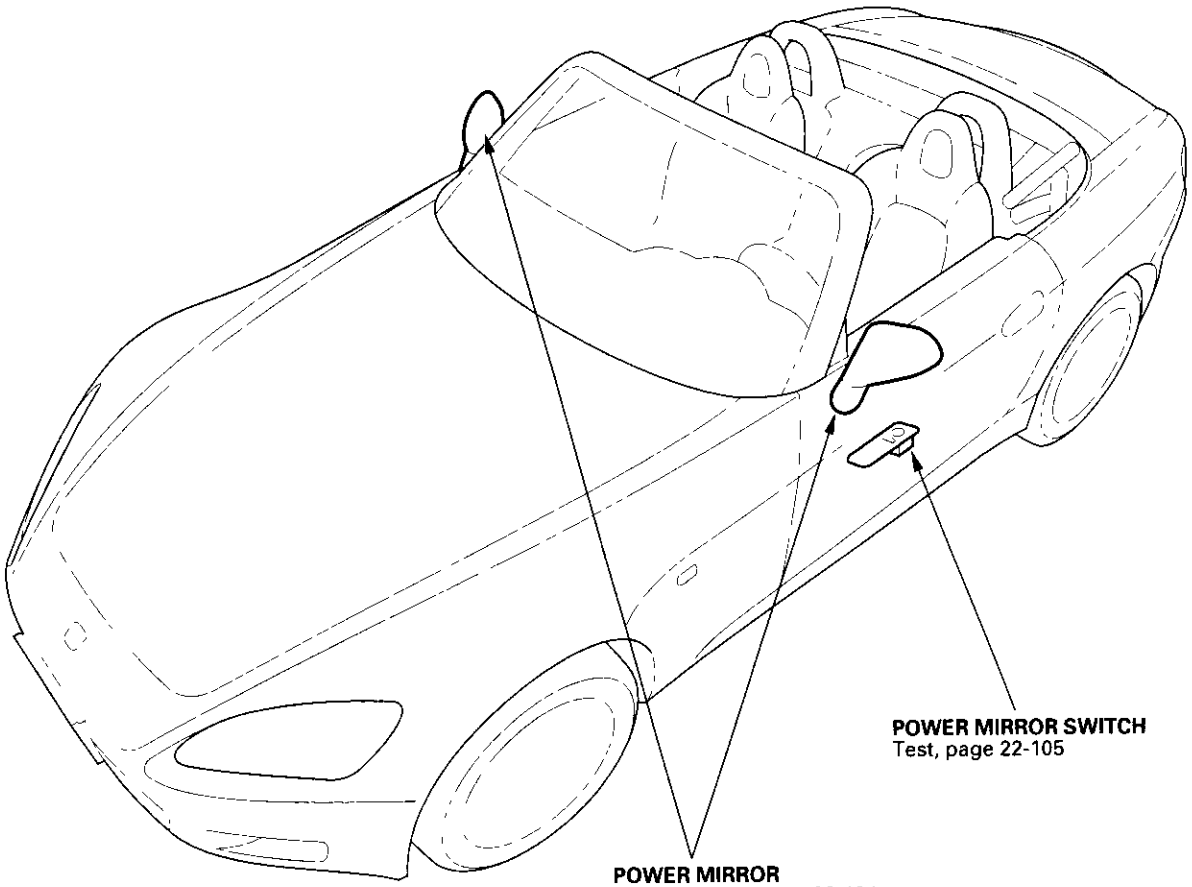

## Circuit Diagram

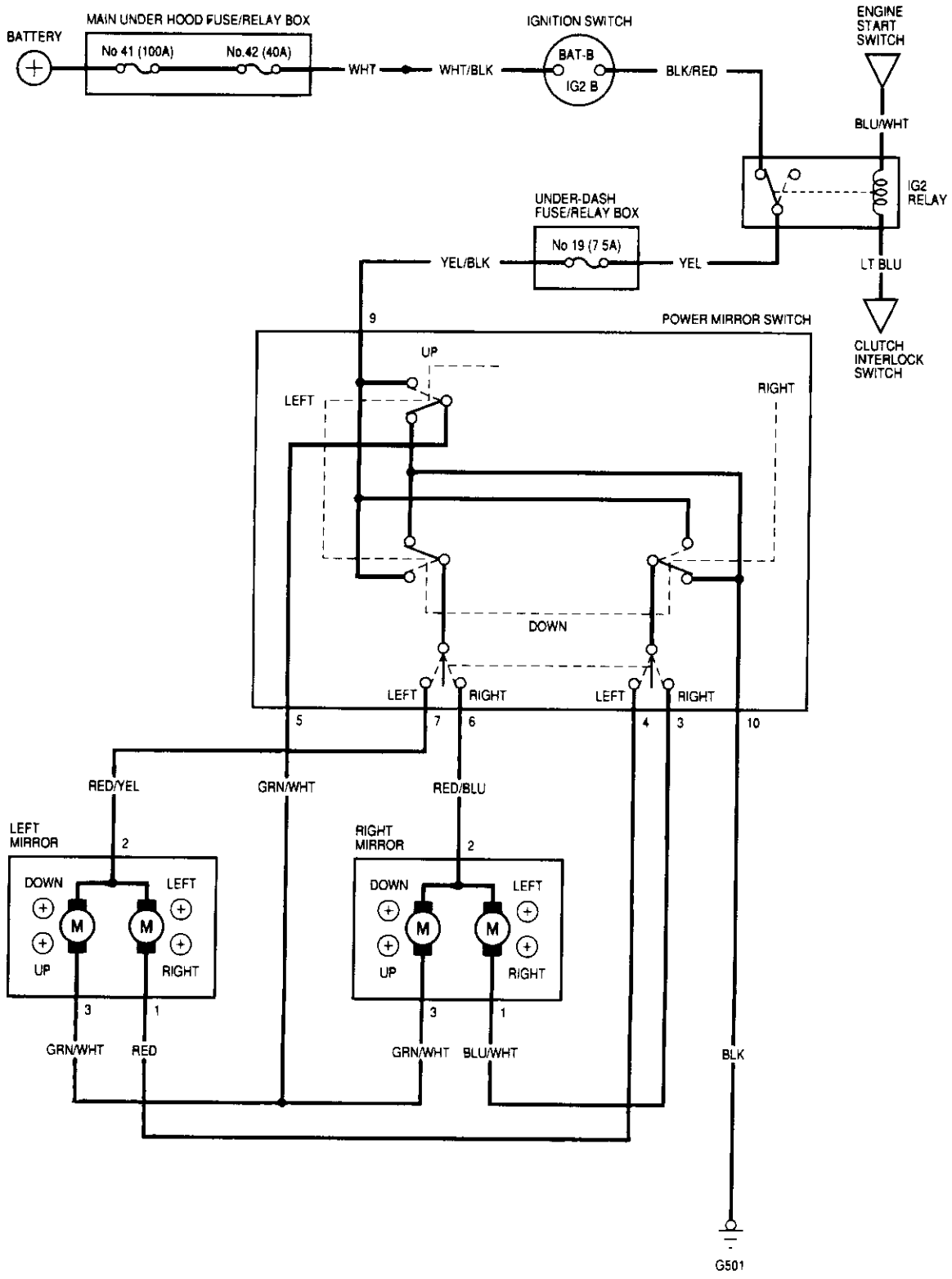

## Function Test

1. Remove the driver's door panel (see page 20-4).

2. Disconnect the 10P connector (A) from the power mirror switch (B), and inspect the terminals. If the terminals are OK, go to step 3.

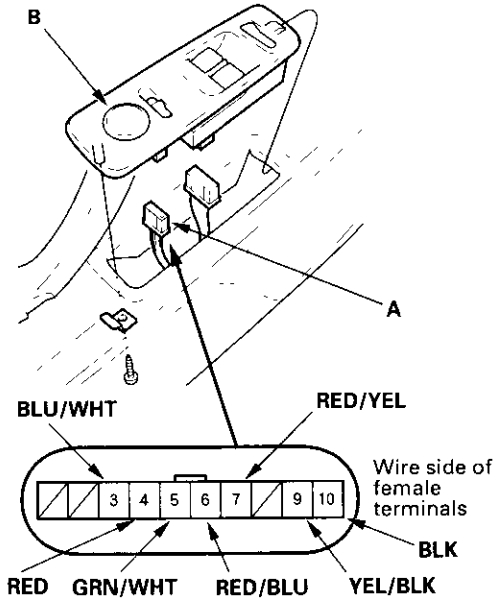


3. Choose the appropriate test based on the symptom:

   - Both mirrors don't work, go to step 4.
   - Left mirror doesn't work, go to step 6.
   - Right mirror doesn't work, go to step 7.

**Both mirrors**

4. Reconnect the 10P connector, and check for voltage between the No. 9 terminal and body ground with the ignition switch ON (II).
   There should be battery voltage.
   Move the mirror selector switch to the left or right and hold down the mirror switch in any direction.

   - If there is no battery voltage, check for:
     - blown No. 19 (7.5 A) fuse in the under-dash fuse/relay box.
     - an open in the YEL/BLK wire.
   - If there is battery voltage, go to step 5.

5. Check for continuity between the No. 10 terminal and body ground.
   Move the mirror selector switch to the left or right and hold down the mirror switch in any direction.
   There should be less than 1 V.

   - If there is no more than 1 V, check for:
     - an open in the BLK wire.
     - poor ground (G501).
   - If there is less than 1 V, check both mirrors individually as described in the next column.

**Left mirror**

6. Connect the No. 9 terminal to the No. 7 terminal, and the No. 5 (or No. 4) terminal to body ground with jumper wires. The left mirror should tilt down (or swing left) with the ignition switch ON (II).

   - If the mirror does not tilt down (or does not swing left), check for an open in the GRN/WHT (or RED) wire between the left mirror and the 10P connector. If the wire is OK, check the left mirror actuator.
   - If the mirror neither tilts down nor swings left, repair the RED/YEL wire.
   - If the mirror works properly, check the mirror switch.

**Right mirror**

7. Connect the No. 9 terminal to the No. 6 terminal, and the No. 5 (or No. 3) terminal to body ground with jumper wires. The right mirror should tilt down (or swing left) with the ignition switch ON (II).

   - If the mirror does not tilt down (or does not swing left), check for an open in the GRN/WHT (or BLU/WHT) wire between the right mirror and the 10P connector.
     If the wire is OK, check the right mirror actuator.
   - If the mirror neither tilts down nor swings left, repair the RED/BLU wire.
   - If the mirror works properly, check the mirror switch.

## Power Mirror Switch Test

1. Remove the driver's door panel (see page 20-4).
2. Disconnect the 10P connector from the power mirror switch.

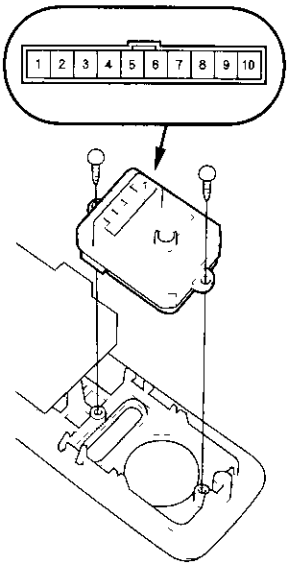


3. Check for continuity between the terminals in each switch position according to the table.

| Terminal / Position | | 3 | 4 | 5 | 6 | 7 | 9 | 10 |
|---|---|---|---|---|---|---|---|---|
| L. | UP | | ○ | | | ○ | ○ | |
| | DOWN | | ○ | | | ○ | ○ | |
| | LEFT | | | ○ | | ○ | ○ | |
| | RIGHT | | ○ | | | | ○ | |
| | OFF | | ○ | ○ | | ○ | ○ | |
| R. | UP | ○ | | | ○ | | ○ | |
| | DOWN | ○ | | | ○ | | | |
| | LEFT | ○ | | ○ | ○ | | | |
| | RIGHT | ○ | | | | | ○ | |
| | OFF | ○ | | ○ | ○ | | ○ | |

4. If the continuity is not as specified, replace the switch.

## Power Mirror Actuator Test

1. Remove the door panel (see page 20-4).
2. Disconnect the 3P connector from the power mirror.

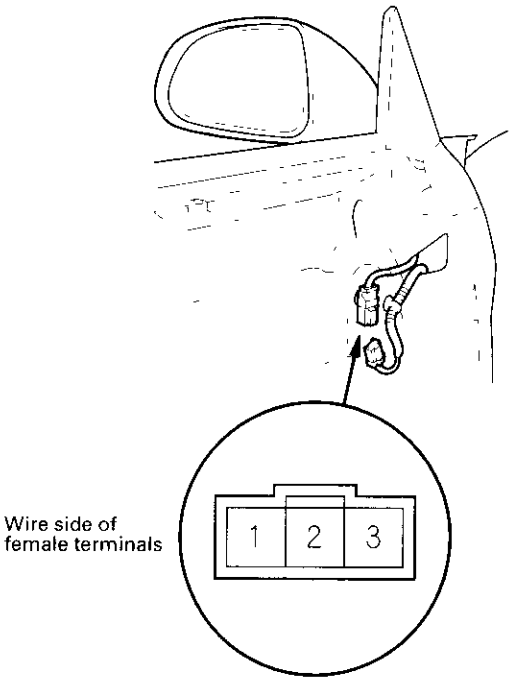


3. Check actuator operation by connecting power and ground according to the table.

| Terminal / Position | 1 | 2 | 3 |
|---|---|---|---|
| TILT UP | | ⊖ | ⊕ |
| TILT DOWN | | ⊕ | ⊖ |
| SWING LEFT | ○ | ⊕ | |
| SWING RIGHT | ⊕ | ⊖ | |

4. If the mirror fails to work properly, replace the mirror actuator.

## Power Mirror Actuator Replacement

1. Remove the power mirror from the door (see page 20-21).
2. Record the terminal locations and wire colors.
3. Cut the wire harness with a wire cutter.

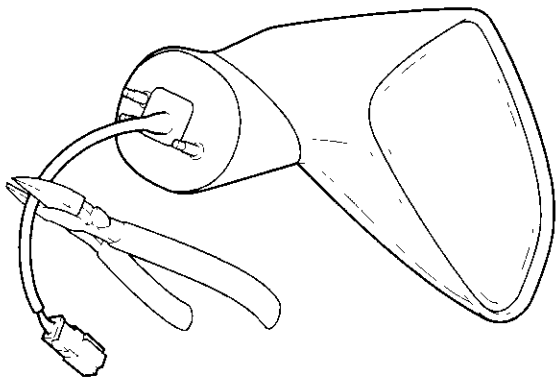

4. Carefully pull out the bottom edge of the mirror holder by hand.
5. Separate the mirror holder from the actuator by slowly pulling them apart.

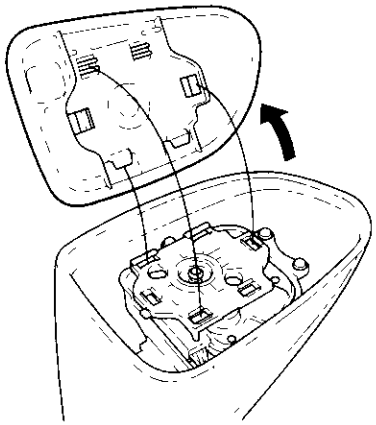

6. Remove the screws and the actuator from the housing.

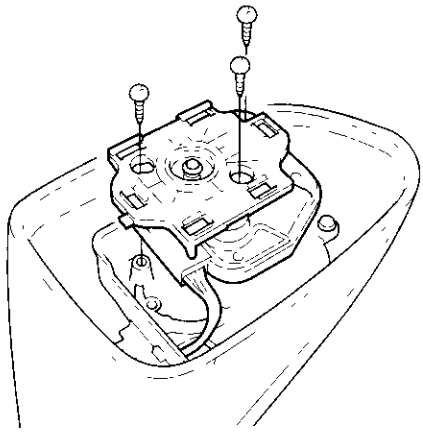

7. Rovte the wire harness of the new actuator through the hole of the mirror housing, then install the new actuator in the reverse order of removal.
8. Insert the terminals into the connector in the original arrangement as shown below.

**Left and right**

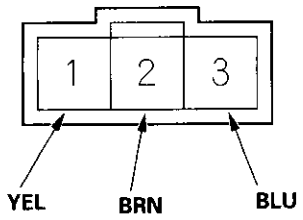


Terminal side of male terminals

9. Reassemble the mirror in the reverse order of disassembly.
   Be careful not to break the mirror holder when reinstalling it to the actuator.
10. Operate the power mirror to check that the actuator works smoothly.

## Component Location Index

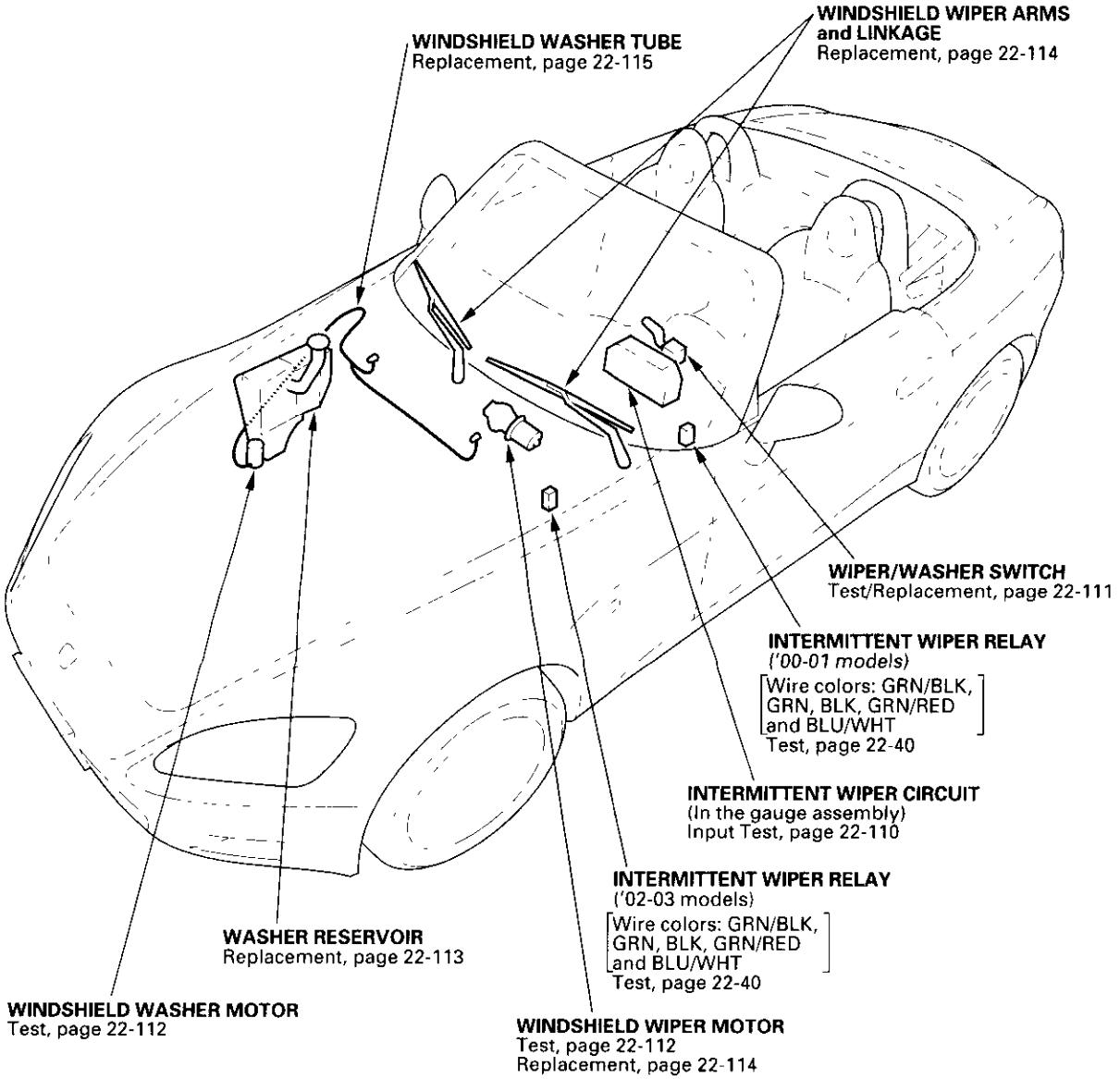

## Circuit Diagram

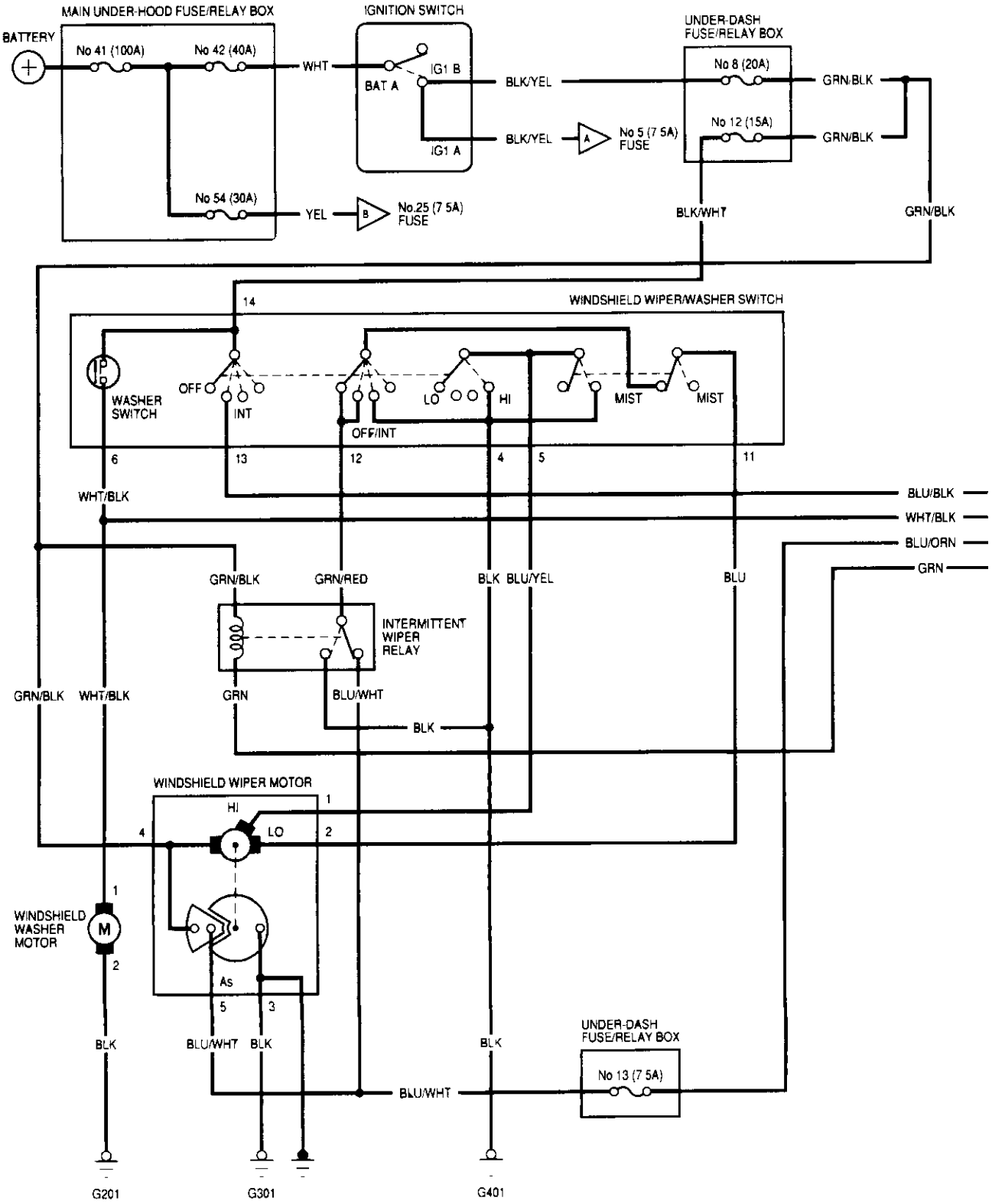

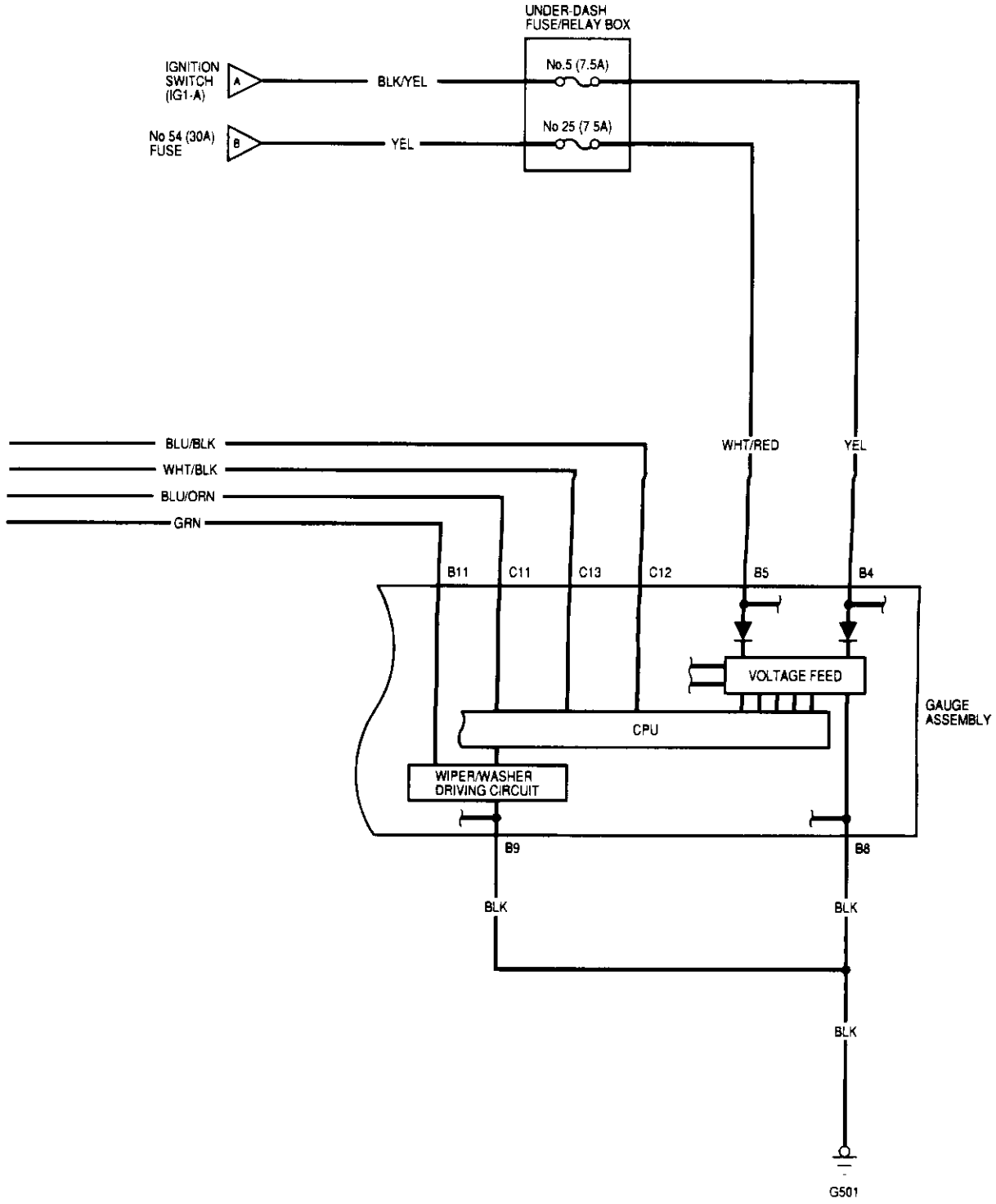
UNDER-DASH FUSE/RELAY BOX
No.5 (7.5A)
No 25 (7.5A)
IGNITION SWITCH (IG1-A)
A
BLK/YEL
No 54 (30A) FUSE
B
YEL
BLU/BLK
WHT/BLK
BLU/ORN
GRN
WHT/RED
YEL
B11
C11
C13
C12
B5
B4
VOLTAGE FEED
CPU
WIPER/WASHER DRIVING CIRCUIT
GAUGE ASSEMBLY
B9
B8
BLK
BLK
BLK
G501

## Intermittent Wiper Control Circuit Input Test

1. Remove the gauge assembly (see page 22-52).

2. Inspect the all connectors and socket terminals to be sure they are all making good contact.

   - If the terminals are bent, loose, or corroded, repair them as necessary, and recheck the system.
   - If the terminals look OK, go to step 3.

GAUGE ASSEMBLY CONNECTOR B (12P)

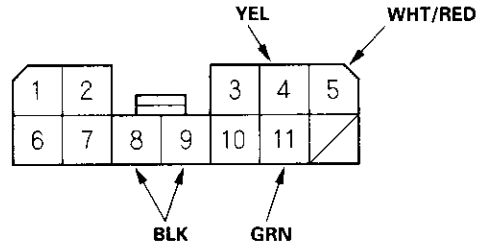


Wire side of female terminals

GAUGE ASSEMBLY CONNECTOR C (20P)

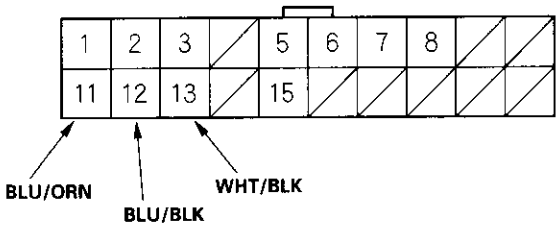


Wire side of female terminals

3. Make these input tests at the connector.

   - If any test indicates a problem, find and correct the cause, then recheck the system.
   - If all the input tests prove OK, the gauge assembly must be faulty; replace it.

| Cavity | Wire | Test condition | Test: Desired result | Possible cause if result is not obtained |
|---|---|---|---|---|
| B4 | YEL | Ignition switch ON (II) | Check for voltage to ground: There should be battery voltage. | • Blown No. 5 (7.5 A) fuse in the under-dash fuse/relay box<br>• An open in the wire |
| B5 | WHT/RED | Under all conditions | Check for voltage to ground: There should be battery voltage. | • Blown No. 54 (30 A) fuse in the main under-hood fuse/relay box<br>• Blown No. 25 (7.5 A) fuse in the under-dash fuse/relay box<br>• An open in the wire |
| B8<br>B9 | BLK | Under all conditions | Check for continuity to ground: There should be continuity. | • Poor ground (G501)<br>• An open in the wire |
| B11 | GRN | Ignition switch ON (II) | Check for voltage to ground: There should be battery voltage. | • Blown No. 8 (20 A) fuse in the under-dash fuse/relay box<br>• Faulty Intermittent wiper relay<br>• An open in the wire |
| C11 | BLU/ORN | Ignition switch ON (II) | Check for voltage to ground: There should be battery voltage. | • Blown No. 13 (7.5 A) fuse in the under-dash fuse/relay box<br>• Faulty wiper motor<br>• An open in the wire |
| C12 | BLU/BLK | Ignition switch ON (II) and wiper switch at INT | Check for voltage to ground: There should be battery voltage. | • Blown No. 12 (15 A) fuse in the under-dash fuse/relay box<br>• Faulty wiper switch<br>• An open in the wire |
| C13 | WHT/BLK | Ignition switch ON (II) and washer switch ON | Check for voltage to ground: There should be battery voltage. | • Blown No. 12 (15 A) fuse in the under-dash fuse/relay box<br>• Faulty washer switch<br>• An open in the wire |

## Wiper/Washer Switch Test/Replacement

1. Lower the steering column, and remove the steering column covers (see page 17-9).
2. Disconnect the 14P connector from the wiper/washer switch.

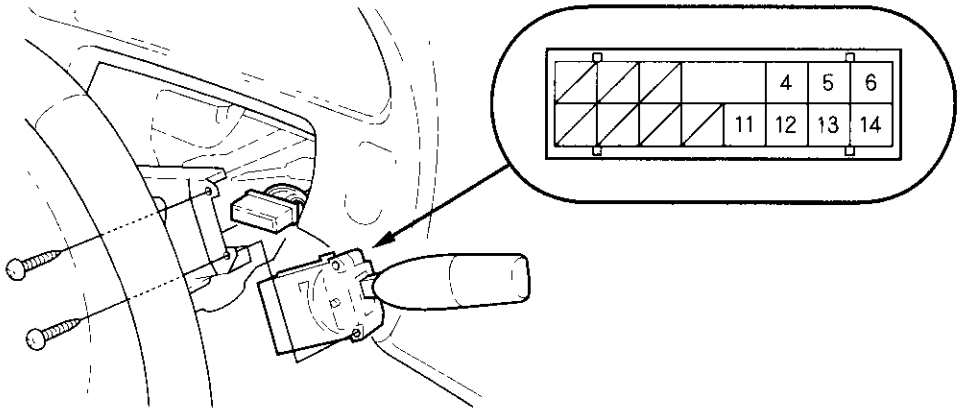


3. Remove the two screws, then pull out the wiper/washer switch.
4. Check for continuity between the terminals in each switch position according to the table. If the continuity is not as specified, replace the switch.

| Terminal / Position | 6 | 5 | 4 | 14 | 13 | 12 | 11 |
|---|---|---|---|---|---|---|---|
| OFF | | | | | | ○ | ○ |
| INT | | | | ○ | ○ | ○ | ○ |
| LO | | | ○ | — | — | — | ○ |
| HI | | ○ | ○ | | | | |
| Mist switch ON | | ○ | ○ | | | | |
| Washer switch ON | ○ | — | — | ○ | | | |

## Wiper Motor Test

1. Open the hood and remove the cap nuts and the wiper arms (see page 22-114).
2. Remove the hood seal and cowl cover (see page 22-114).
3. Disconnect the 5P connector from the wiper motor.

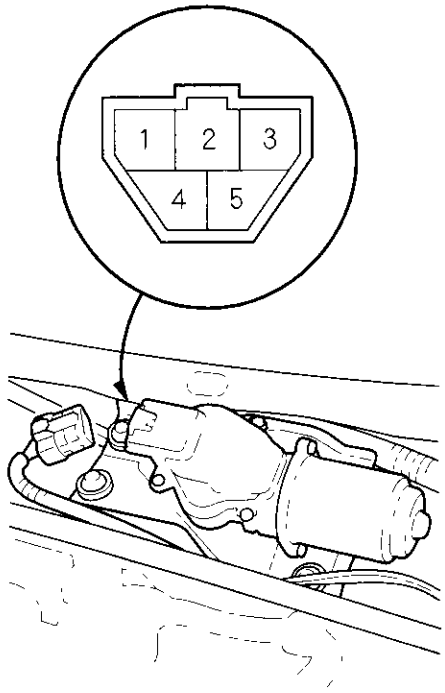


4. Test the motor by connecting battery power and ground according to the table. If the motor does not run or fails to run smoothly, replace it.

| Terminal / Position | 1 | 2 | 4 |
|---|---|---|---|
| LOW SPEED | | ⊖ | ⊕ |
| HIGH SPEED | ⊖ | | ⊕ |

5. Connect an analog voltmeter between the No. 5 (+) and No. 3 (−) terminals, and run the motor at low or high speed. The voltmeter should indicate 0 V and 5 V or more alternately. If it does not, replace the motor.

## Washer Motor Test

1. Remove the right inner fender (see page 20-105).
2. Disconnect the 2P connector (A) from the washer motor (B).

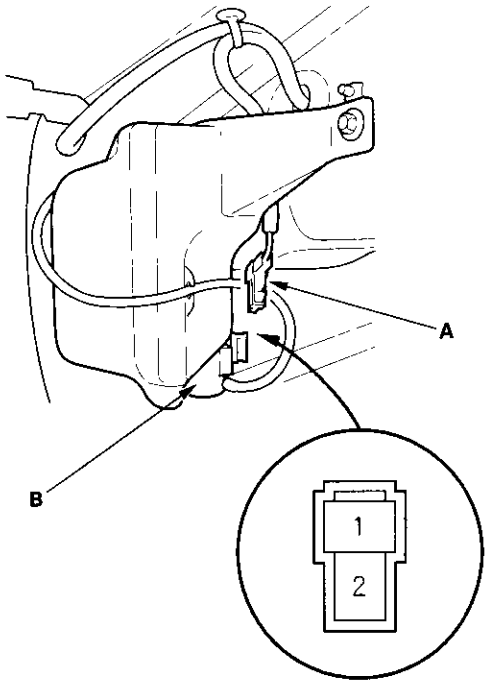


3. Test the washer motor by connecting battery power to terminal No. 1 and ground to terminal No. 2.
4. If the motor does not run or fails to run smoothly, replace the motor.

## Washer Reservoir Replacement

1. Pull away the right inner fender.
2. Disconnect the washer tube (A) and washer motor 2P connector (B).

**USA:**

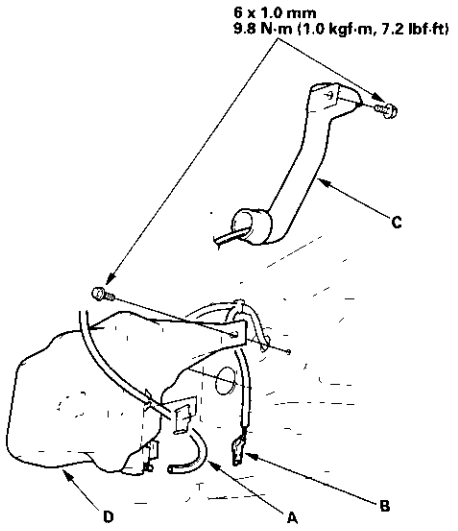


**Canada:**

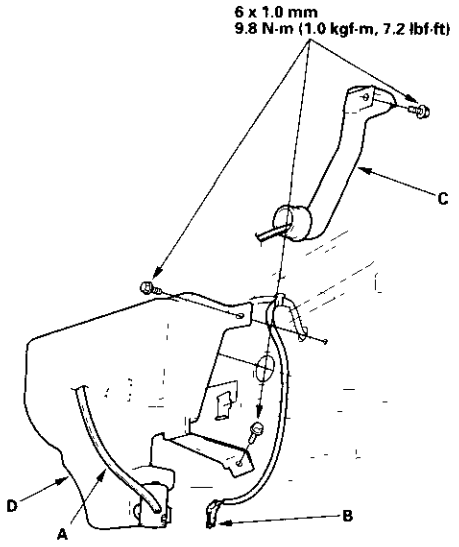


3. Remove the bolts, then separate and remove the filler neck (C) from the washer reservoir (D).
4. Remove the washer reservoir.
5. Install in the reverse order of removal. Check the washer motor operation.

## Wiper Motor Replacement

1. Open the hood, and remove the cap nuts and the wiper arms.

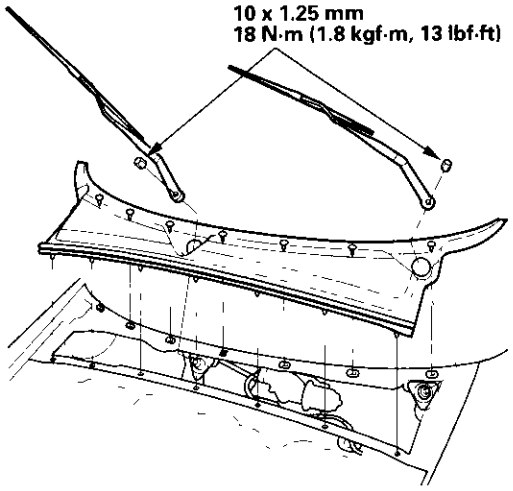


2. Remove the hood seal and cowl cover.

3. Disconnect the 5P connector (A) from the wiper motor (B).

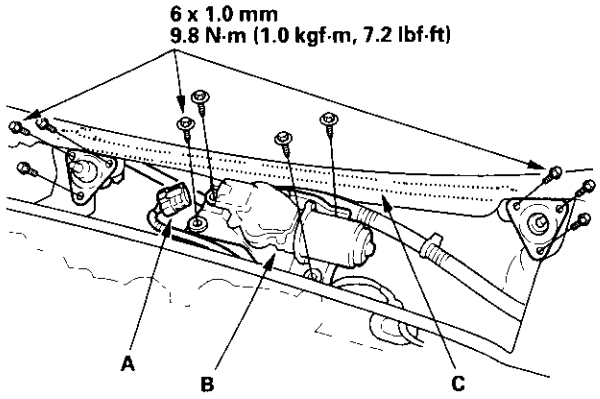


4. Remove the bolts, then remove windshield wiper linkage assembly (C).

5. Remove the three mounting bolts and nut from the wiper linkage (A) to remove the wiper motor (B).

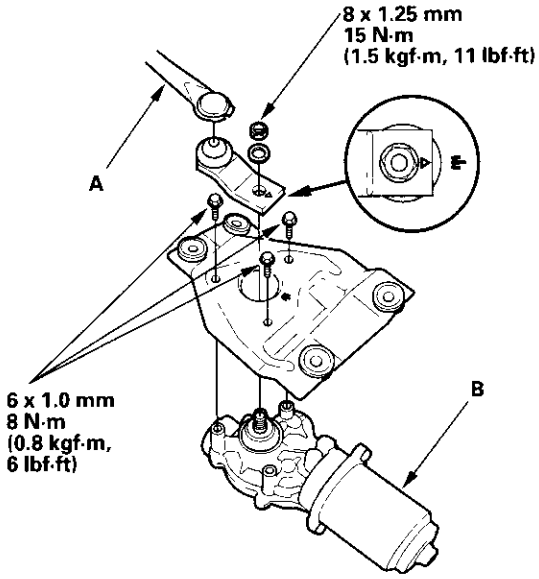


6. Install in the reverse order of removal, and note these items:

   - Grease all moving parts.
   - Before reinstalling the wiper arms, turn the wiper switch ON, then OFF to return the wiper shafts to the park position.
   - If necessary, replace any damaged clips.
   - Check the wiper motor operation.

## Washer Tube Replacement

1. Remove the front bumper and the right inner fender (see page 20-105).
2. Remove the washer nozzles and clips, then remove the tube.

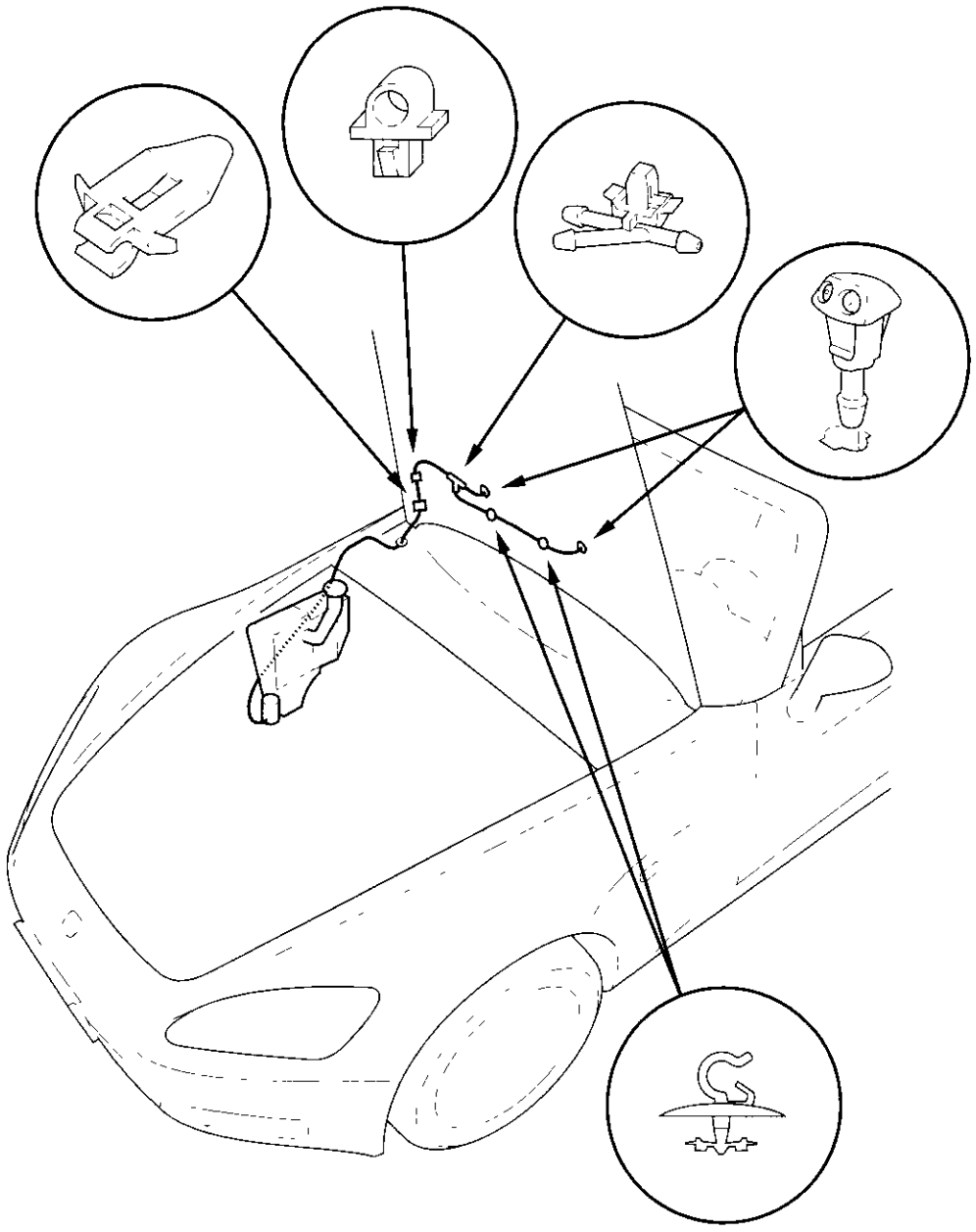

3. Install in the reverse order of removal. Take care not to pinch the washer tube. Check the windshield washer operation.

## Component Location Index

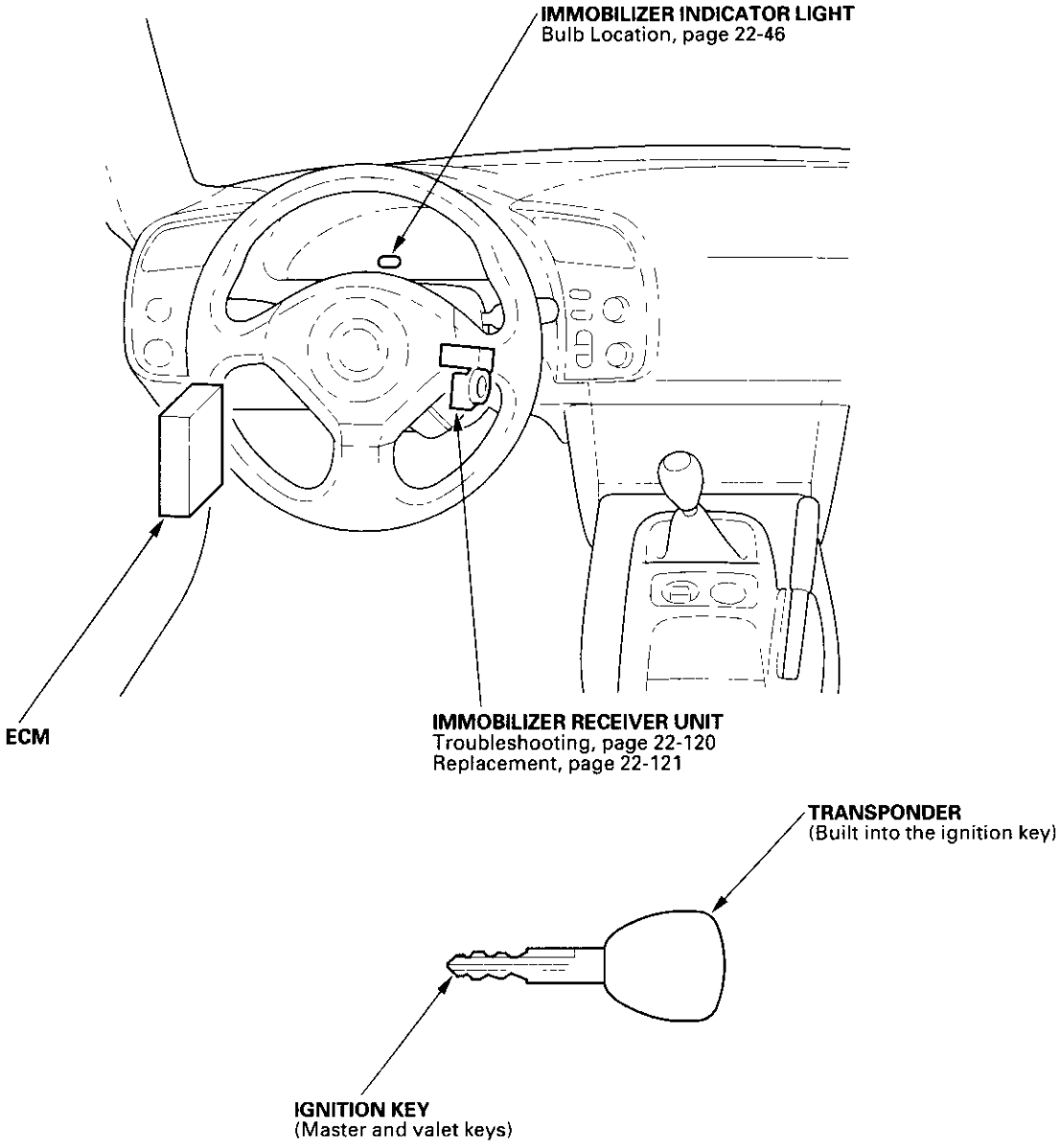

## System Description

The vehicle is equipped with an immobilizer system that will disable the vehicle unless the proper ignition key is used. This system consists of a transponder located in the ignition key, an immobilizer receiver unit, an indicator light, and the ECM.

The vehicle has two kinds of keys.

- The black master key for:
  - ignition switch.
  - door locks.
  - trunk lock.

- The gray valet key for:
  - ignition switch.
  - door locks.

When the key is inserted in the ignition switch and turned to the (II) position, the immobilizer receiver unit sends power to the transponder in the ignition key. The transponder then sends a coded signal back through the immobilizer receiver unit to the ECM.

- The immobilizer system can store up to six key codes.
- If it is necessary to rewrite the ECM, the dealer needs the customer's vehicle, all its master keys and valet keys, and the Honda PGM Tester equipped with an immobilizer program card with the latest version of PGM Tester software. Any key that is not learned during rewriting will no longer start the engine, except keys duplicated with the Ilco Code Key Duplicator.
- If the customer has lost his key, and cannot start the engine, contact Honda Customer Relations.
- It is possible to add ONE new key without reprogramming all of the keys (follow the prompts in the PGM Tester IMMOBI menu).

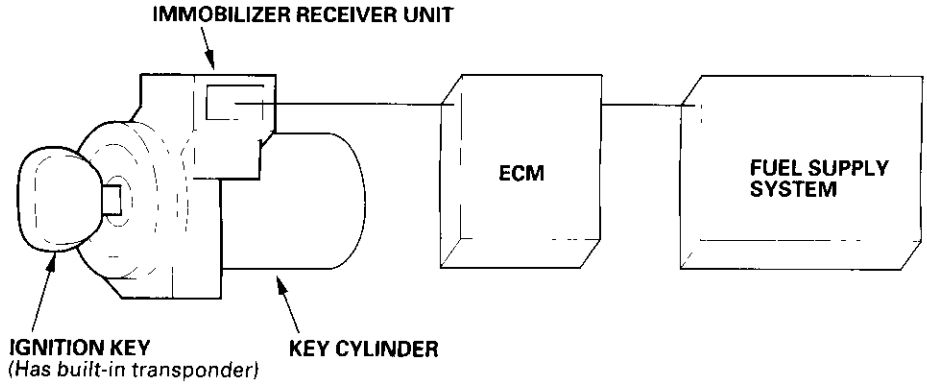


(cont'd)

## System Description (cont'd)

- If the proper key has been used, the immobilizer indicator light will come on for about 2 seconds, then go off.
- If the wrong key has been used or the code was not received or recognized by the ECM, the indicator light will come on for about 2 seconds, then it will blink until the ignition switch is turned OFF. For accurate immobilizer system diagnosis, get as much information from the customer as possible. A blinking indicator light means the key was not recognized.
- If the ignition switch is turned OFF, the indicator will blink for about 5 seconds to signal that the immobilizer system has been set correctly, then the indicator will go off.

NOTE: Large metal objects, key fobs, other immobilizer keys, and other transponders can interfere with the immobilizer signal. If an intermittent problem is suspected, remove the ignition key from the key ring.

| Problem | Part set | PGM-Tester required ? |
|---|---|---|
| ① Master or valet key has been lost or additional master or valet key is required. | Blank key | YES |
| ② All master and valet keys have been lost. | Blank key x 2, or 3 | YES |
| ③ Immobilizer receiver unit does not work. | Immobilizer receiver unit | NO |
| ④ ECM does not work. | ECM | YES |
| ⑤ Ignition switch does not work. | Ignition switch<br>Master keys, and valet key (rekey all lock cylinders to the new key). | YES |
| ⑥ Door key cylinder is broken. | Door key cylinder (rekey the cylinder) | NO |

## Circuit Diagram

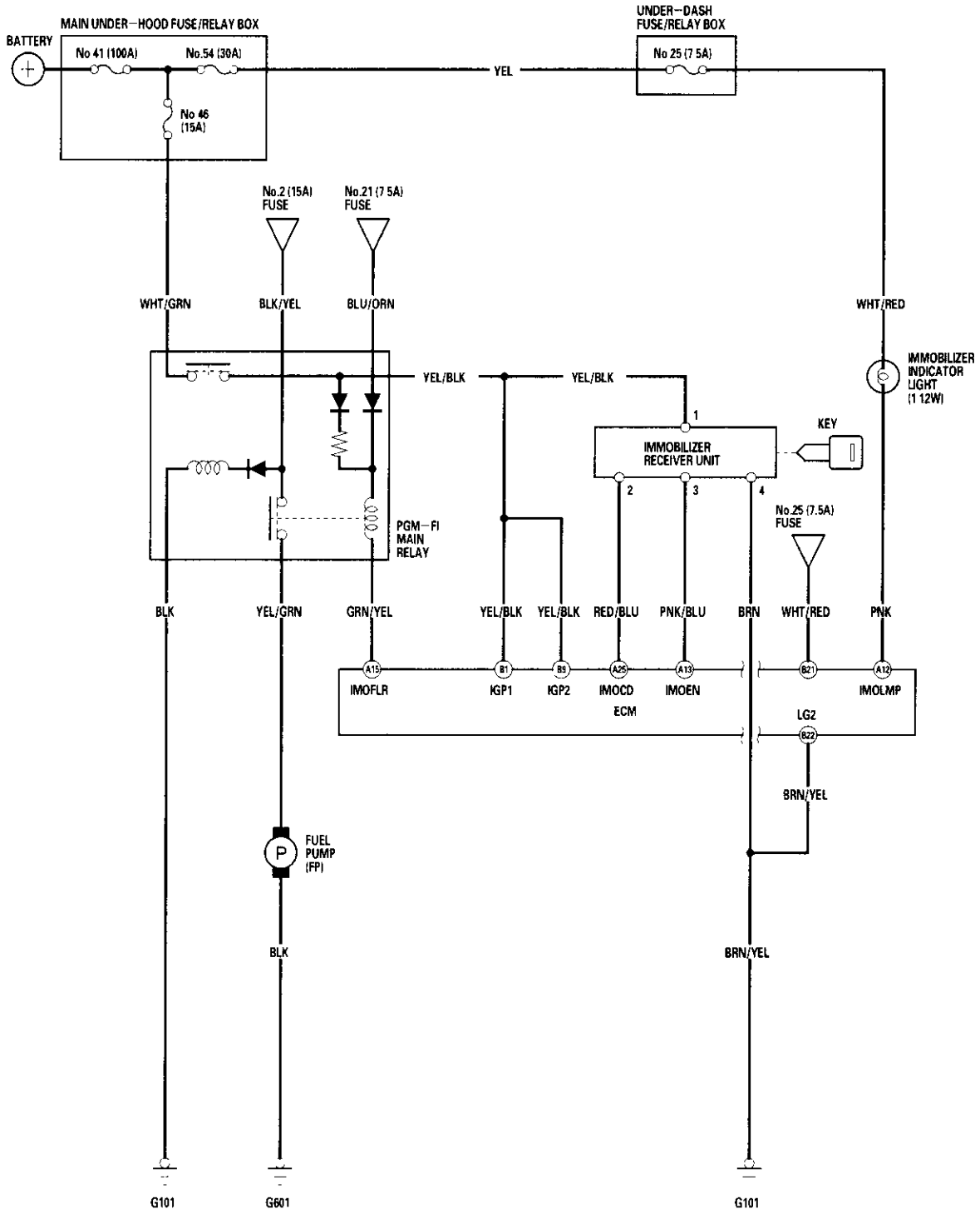

## Troubleshooting

Follow this procedure if the vehicle does not start, or after rewriting the ECM with the PGM-Tester and the vehicle does not start.

**Note these items before troubleshooting:**

- Due to the action of the immobilizer system, the engine takes slightly more time to start than a vehicle without an immobilizer system.
- When the system is normal, and the proper key is inserted, the indicator light comes on for 2 seconds, then it will go off.
- If the indicator starts to blink after 2 seconds, or if the engine does not start, repeat the starting procedure. If the engine still does not start, troubleshoot the system.

1. Using a scan tool, check for a Diagnostic Trouble Code (DTC) (see page 11-3).

   *Is DTC P1607 indicated?*

   **YES** – Replace the ECM (see page 11-4).■

   **NO** – Go to step 2.

2. Turn the ignition switch ON (II) with the proper key.

3. Check to see if the immobilizer indicator light comes on.

   *Does the indicator light blink?*

   **YES** – Go to step 4.

   **NO** – Check for these problems:

   - an open in the PNK wire between the gauge assembly and ECM.
   - a faulty immobilizer indicator light.■

4. Disconnect the 5P connector from the immobilizer receiver unit.

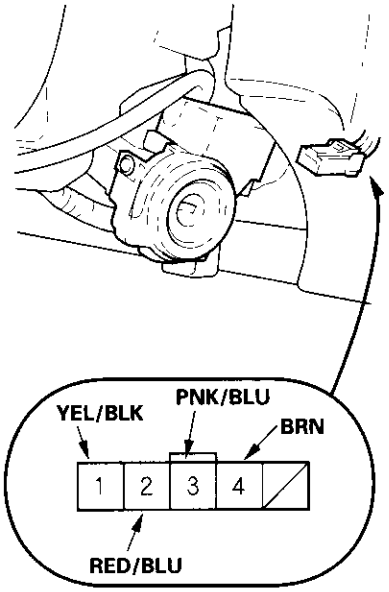


Wire side of female terminals

5. Check for voltage between the No. 1 terminal and body ground with the ignition switch turned ON (II).

   *Is there battery voltage?*

   **YES** – Go to step 6.

   **NO** – Check for these problems:

   - a blown No. 2 (15 A) fuse in the under-dash fuse/relay box.
   - a blown No. 46 (15 A) fuse in the main under-hood fuse/relay box.
   - an open in the YEL/BLK wire between the PGM-FI main relay and immobilizer receiver unit.
   - a faulty PGM-FI main relay.■

6. Check for continuity between the No. 4 terminal and body ground.

   *Is there continuity?*

   **YES** Go to step 7.

   **NO** – Repair open in the BRN wire between the immobilizer receiver unit and G101. ■

7. Check for continuity between the No. 2 terminal and the ECM.

   *Is there continuity?*

   **YES** Go to step 8.

   **NO** - Repair open in the RED/BLU wire between the immobilizer unit and ECM. ■

8. Check for continuity between the No. 3 terminal and ECM.

   *Is there continuity?*

   **YES** – Replace the immobilizer receiver unit. If the engine still won't start, substitute a known-good ECM, and recheck ■

   **NO** – Repair open in the PNK/BLU wire between the immobilizer unit and ECM. ■

## Immobilizer Receiver Unit Replacement

1. Remove the steering column covers (see page 17-9).

2. Disconnect the 5P connector (A) from the immobilizer receiver unit (B).

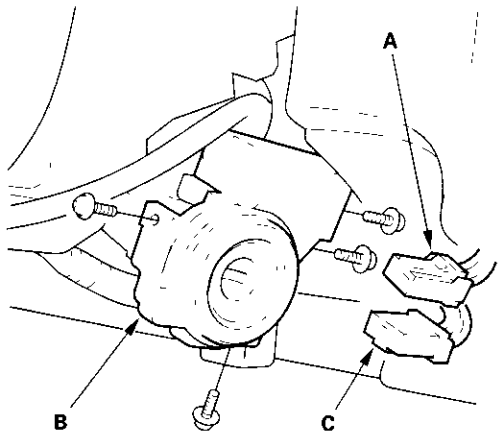


3. Disconnect the 7P connector (C) from the ignition key switch.

4. Remove the four screws, and remove the immobilizer receiver unit from the ignition key cylinder.

5. Install in the reverse order of removal.

6. After replacement, make sure the immobilizer indicator light blinks correctly.

   NOTE: The ECM does not need to be reprogrammed if only the receiver has been replaced.

## Component Location Index

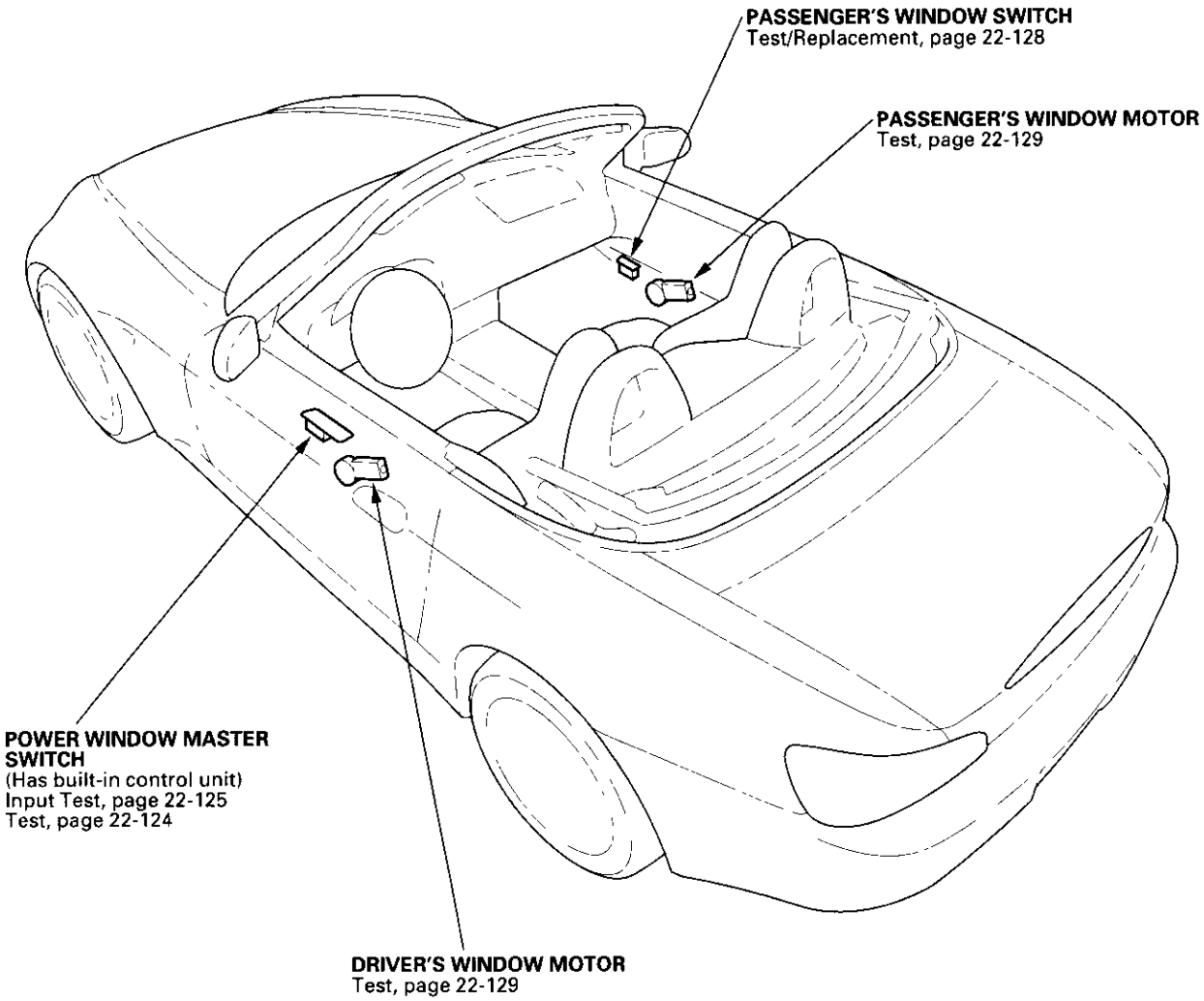

## Circuit Diagram

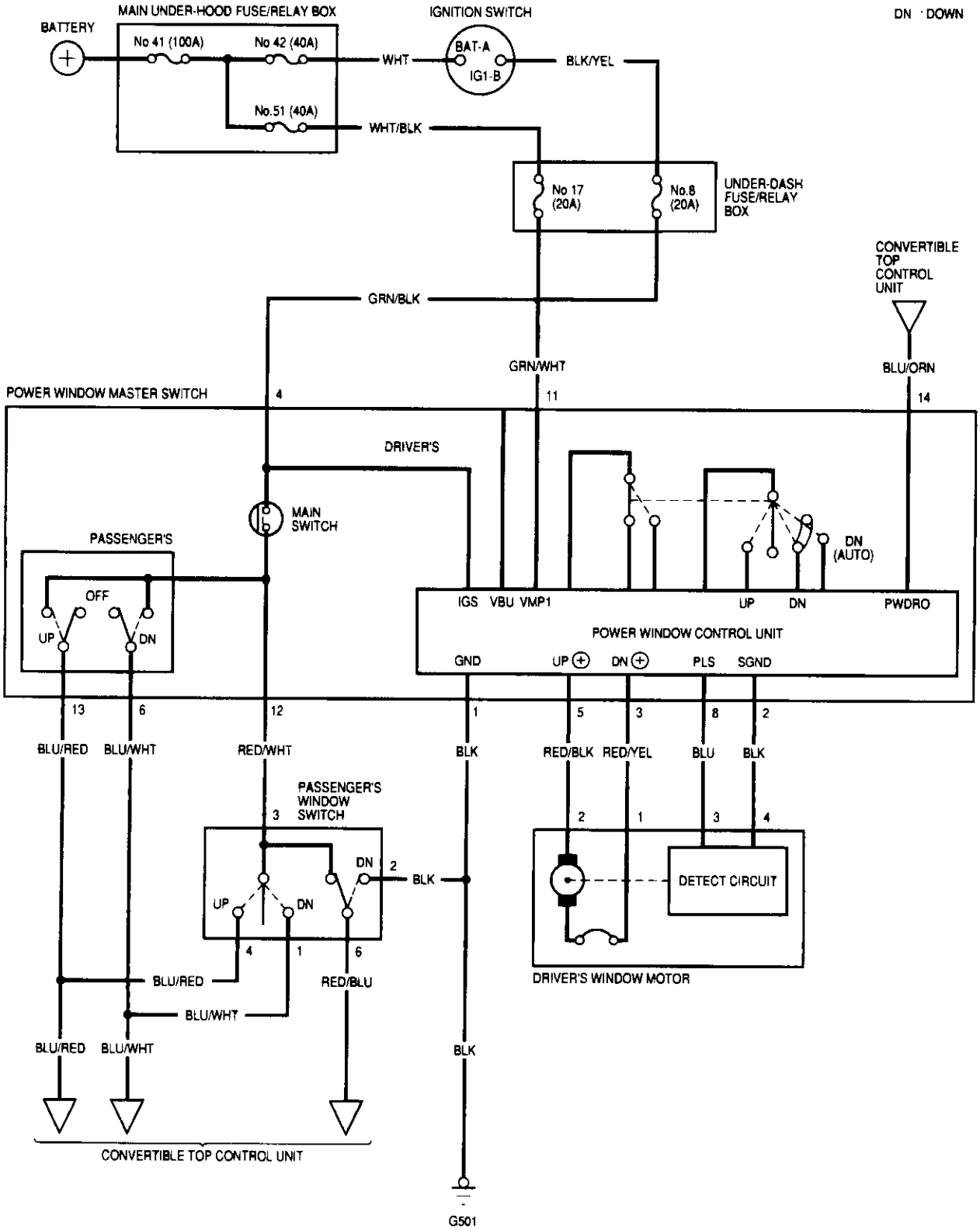

## Master Switch Test

1. Remove the driver's door panel (see page 20-4).
2. Disconnect the 14P connector from the power window master switch.

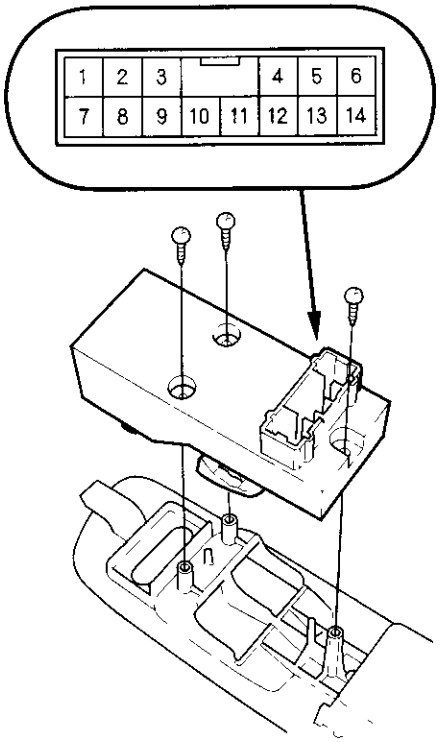


3. Check the master passenger's switch for continuity between the terminals in each switch position according to the table.

   Driver's Switch
   NOTE: The driver's switch is combined with the control unit so you cannot isolate the switch to test it. Instead, run the master switch input test procedures (see step 5 on page 22-126).

   Passenger's Switch

| Position | Terminal / Main Switch | 13 | 4 | 6 | 12 |
|---|---|---|---|---|---|
| OFF | ON | | ○ | | ○ |
| | OFF | | | | |
| PASSENGER'S SWITCH UP | ON | ○ | ○ | | ○ |
| | OFF | | | | |
| PASSENGER'S SWITCH DOWN | ON | | ○ | ○ | ○ |
| | OFF | | | | |

4. If the continuity is not as specified, replace the switch.

## Master Switch Input Test

1. Remove the door panel (see page 20-4).

2. Remove the power window master switch (A) from the door panel.

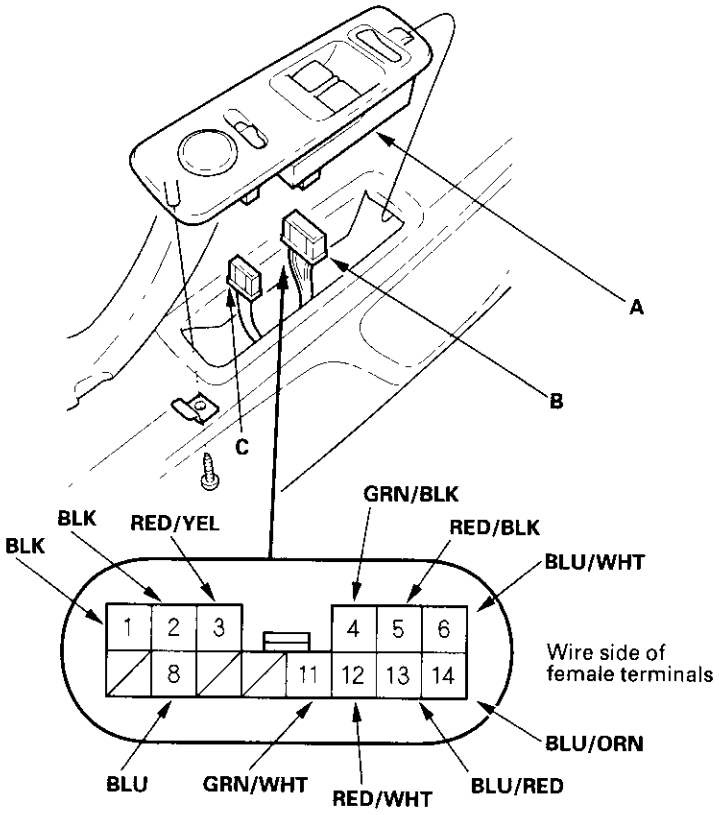


3. Disconnect the 14P connector (B) and the 10P connector (C) from the power window master switch.

4. Inspect the connectors and socket terminals to be sure they are all making good contact.

   - If the terminals are bent, loose or corroded, repair them as necessary, and recheck the system.
   - If the terminals look OK, go to step 5.

(cont'd)

## Master Switch Input Test (cont'd)

5. With the master switch still disconnected, make these input tests at the 14P connector.

   - If any test indicates a problem, find and correct the cause, then recheck the system.
   - If all the input tests prove OK, go to step 6.

| Cavity | Wire | Test condition | Test: Desired result | Possible cause if result is not obtained |
|---|---|---|---|---|
| 4 | GRN/BLK | Ignition switch ON (II) | Check for voltage to ground:<br>There should be battery voltage. | • Blown No. 8 (20 A) fuse in the under-dash fuse/relay box<br>• An open in the wire |
| 1 | BLK | Under all conditions | Check for continuity to ground:<br>There should be continuity. | • Poor ground (G501)<br>• An open in the wire |
| 13 | BLU/RED | Connect the No. 4 terminal to the No. 13 terminal and connect the No. 4 terminal to the No. 12 terminal, then turn the ignition switch ON (II). | Check for passenger's window motor:<br>It's should run (the window moves up). | • Blown No. 18 (20 A) fuse in the under-dash fuse/relay box<br>• Faulty passenger's window motor<br>• Faulty passenger's window switch<br>• Faulty convertible top control unit<br>• Poor ground (G501)<br>• An open in the wire |
| 12 | RED/WHT | | | |
| 6 | BLU/WHT | Connect the No. 4 terminal to the No. 6 terminal. | Check for passenger's window motor:<br>It's should run (the window moves down). | |
| 12 | RED/WHT | | | |
| 11 | GRN/WHT | Under all conditions | Check for voltage to ground:<br>There should be battery voltage. | • Blown No. 17 (20 A) fuse in the under-dash fuse/relay box<br>• An open in the wire |
| 5 | RED/BLK | Connect the No. 5 (2) terminal to the No. 11 terminal and connect the No. 3 terminal to the No. 1 terminal. | Check for driver's window motor:<br>It should run (the window moves up). | • Faulty driver's window motor<br>• An open in the wire |
| 3 | RED/YEL | Connect the No. 3 terminal to the No. 11 terminal and connect the No. 5 terminal to the No. 1 terminal. | Check for driver's window motor:<br>It should run (the window moves down). | |

6. Reconnect the master switch, and perform the following input tests.

   - If any test indicates a problem, find and correct the cause, then recheck the system.
   - If all the input tests prove OK, go to step 7.

| Cavity | Wire | Test condition | Test: Desired result | Possible cause if result is not obtained |
|---|---|---|---|---|
| 8 | BLU | While operating the driver's window switch | Check for voltage between the No. 8 and No. 2 terminals:<br>There should be 0 – 5 V or more repeatedly. | • Faulty driver's window motor<br>• Faulty power window master switch<br>• An open in the wire |
| 2 | BLK | Under all conditions | Check for continuity to ground:<br>There should be continuity. | • Faulty power window master switch<br>• An open in the wire |
| 14 | BLU/ORN | Ignition switch ON (II), and convertible top switch ON.<br>Parking brake lever UP. | Check for voltage between the No. 14 and No. 1 terminals:<br>There should be 0 – 8 V or more repeatedly. | • Faulty convertible top control unit<br>• Faulty power window master switch<br>• An open in the wire |

7. If all the input tests prove OK, the power window master switch must be faulty; replace it.

## Passenger's Window Switch Test/Replacement

1. Remove the switch and switch panel from the door panel.

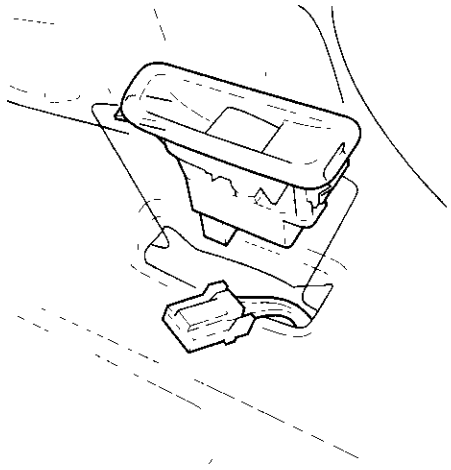

2. Disconnect the 6P connector from the switch.
3. Remove the two mounting screws from the switch panel.

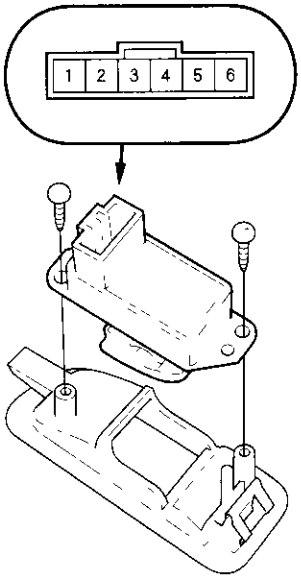


4. Check for continuity between the terminals in each switch position according to the table.

| Terminal / Position | 1 | 2 | 3 | 4 | 6 |
|---|---|---|---|---|---|
| UP | | | ○ | ○ | ○ |
| OFF | | | ○ | | ○ |
| DOWN | ○ | ○ | ○ | | ○ |

5. If the continuity is not as specified, replace the switch.

## Driver's Window Motor Test

**Motor Test:**

1. Remove the driver's door panel (see page 20-4).
2. Disconnect the 4P connector from the window motor.

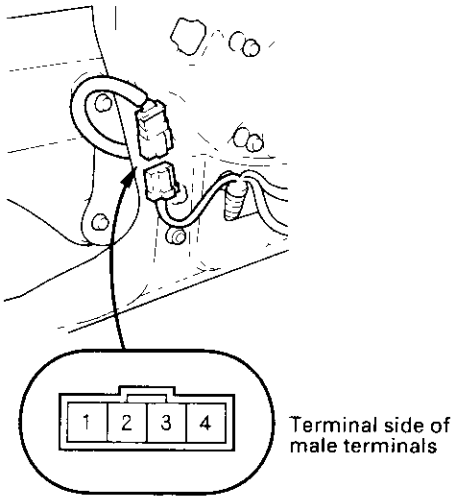


3. Test the motor in each direction by connecting battery power and ground according to the table. When the motor stops running, disconnect one lead immediately.

| Terminal / Direction | 1 | 2 |
|---|---|---|
| UP | ⊖ | ⊕ |
| DOWN | ⊕ | ⊖ |

4. If the motor does not run or fails to run smoothly, replace it.

**Detect Circuit Test:**

5. Connect the test leads of an analog ohmmeter to the No. 3 and No. 4 terminals.
6. Run the motor by connecting power and ground to the No. 1 and No. 2 terminals. The ohmmeter needle should move back and forth alternately. If it does not, replace the motor.

## Passenger's Window Motor Test

1. Remove the passenger's door panel (see page 20-4).
2. Disconnect the 2P connector from the window motor.

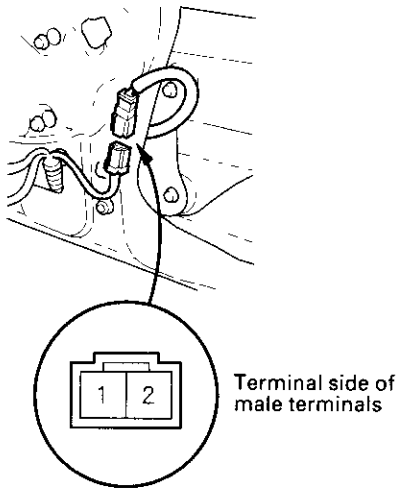


3. Check window motor operation by connecting power and ground according to the table. When the motor stops running, disconnect one lead immediately.

| Terminal / Direction | 1 | 2 |
|---|---|---|
| UP | ⊕ | ⊖ |
| DOWN | ⊖ | ⊕ |

4. If the motor does not run or fails to run smoothly, replace it.

## Component Location Index

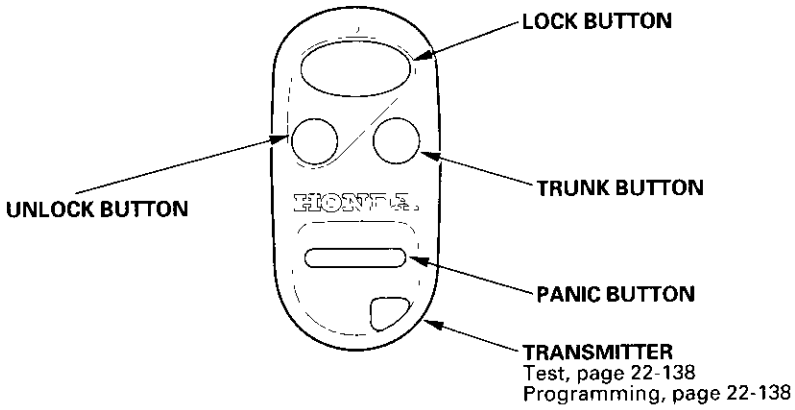


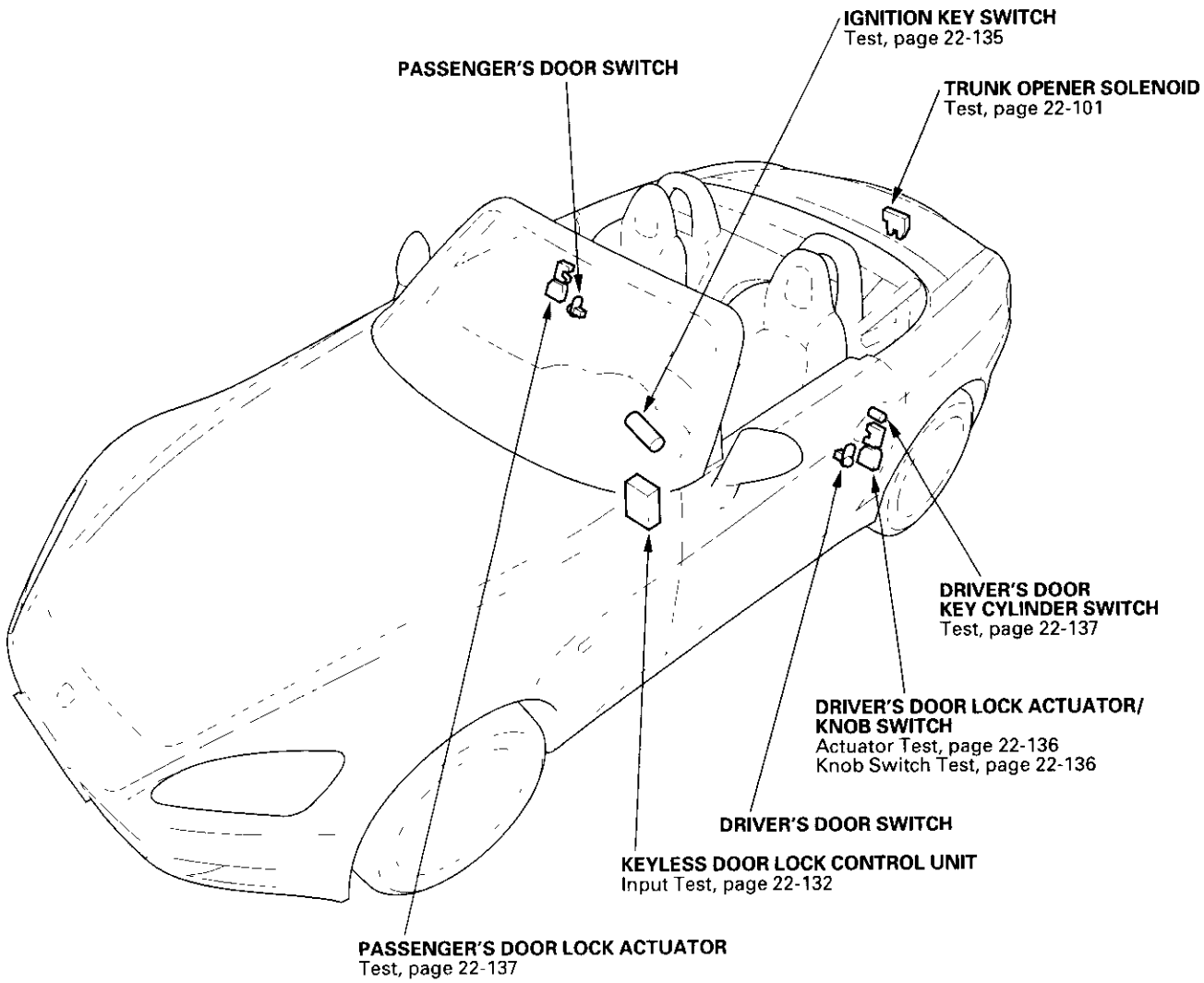

## Circuit Diagram

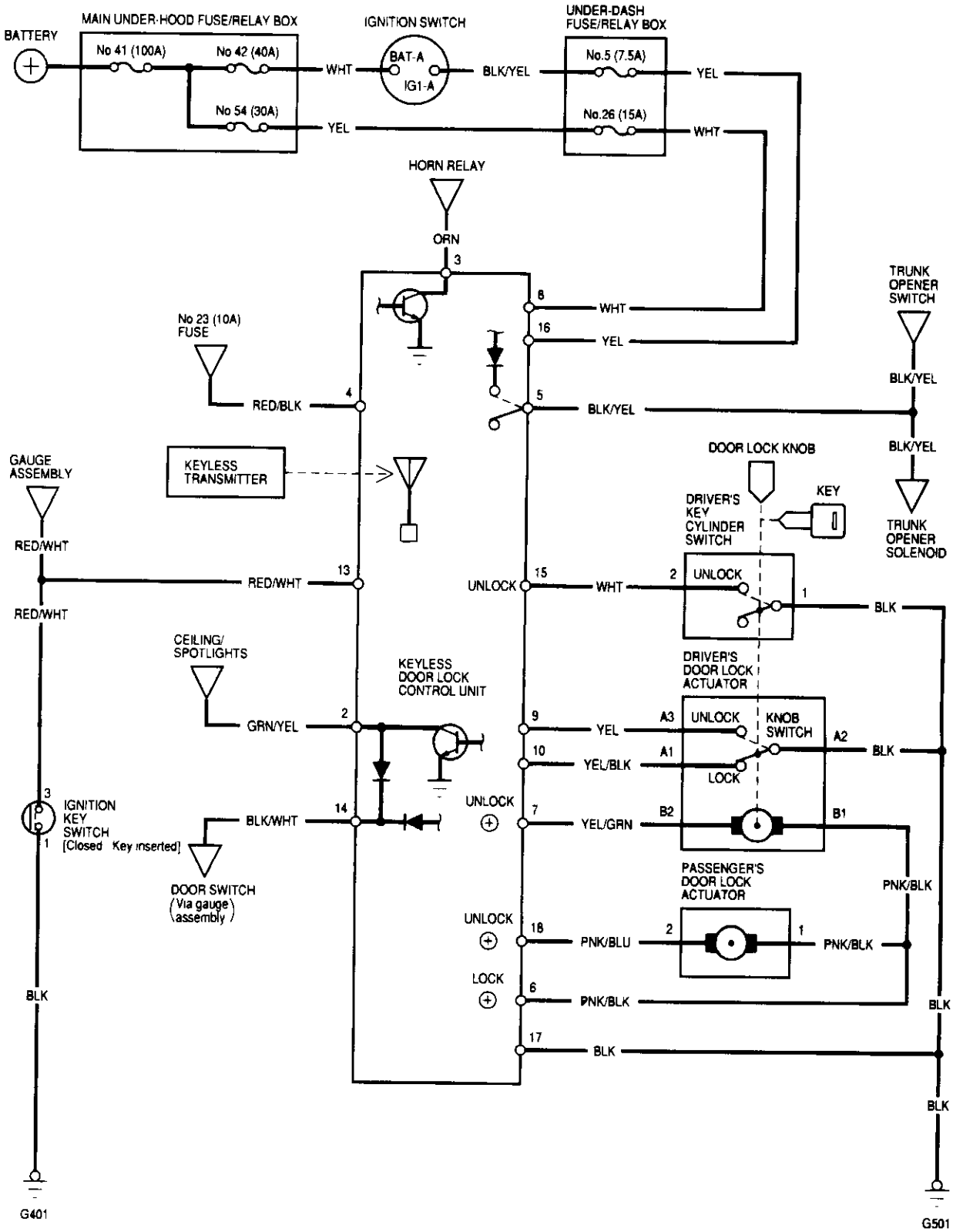

## Keyless Door Lock Control Unit Input Test

1. Disconnect the 18P connector from the keyless door lock control unit.

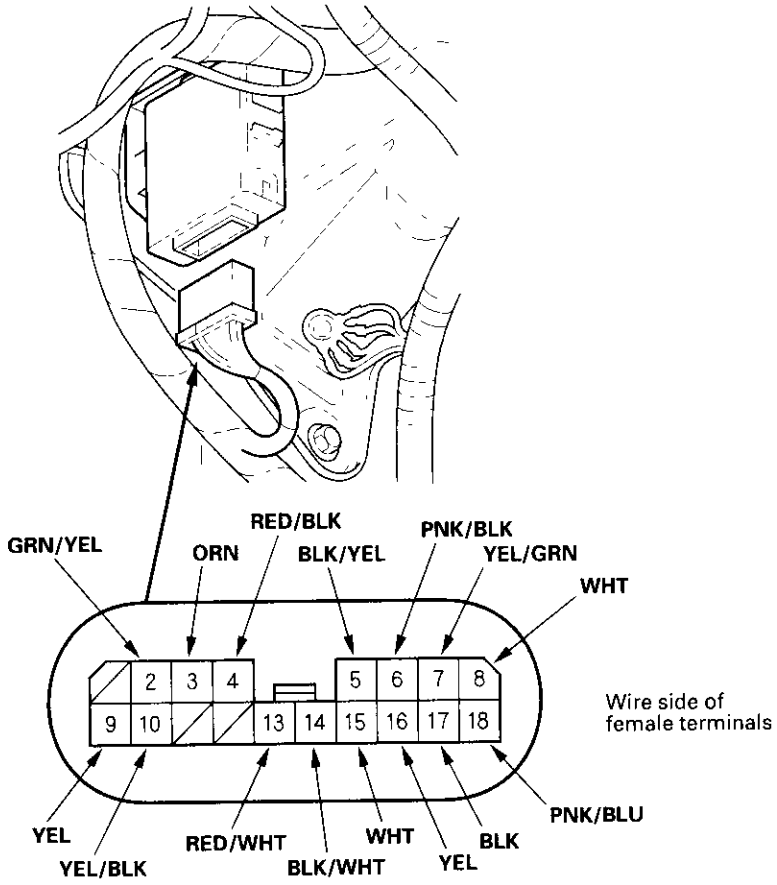


2. Inspect the connector and socket terminals to be sure they are all making good contact.

   - If the terminals are bent, loose or corroded, repair them as necessary, and recheck the system.
   - If the terminals look OK, go to step 3.

3. Make these input tests at the connector.

   - If any test indicates a problem, find and correct the cause, then recheck the system.
   - If all the input tests prove OK, go to step 4.

| Cavity | Wire | Test condition | Test: Desired result | Possible cause if result is not obtained |
|---|---|---|---|---|
| 17 | BLK | Under all conditions | Check for continuity to ground: There should be continuity. | • Poor ground (G501)<br>• An open in the wire |
| 5 | BLK/YEL | Under all conditions | Check for continuity to ground: There should be continuity. | • Faulty trunk opener solenoid<br>• Poor ground (G601)<br>• An open in the wire |
| 8 | WHT | Under all conditions | Check for voltage to ground: There should be battery voltage. | • Blown No. 26 (15 A) fuse in the under-dash fuse/relay box<br>• An open in the wire |
| 16 | YEL | Ignition switch ON (II) | Check for voltage to ground: There should be battery voltage. | • Blown No. 5 (7.5 A) fuse in the under-dash fuse/relay box<br>• An open in the wire |
| 7 | YEL/GRN | Connect the No. 7 terminal to the No. 8 terminal, and the No. 6 terminal to the No. 17 terminal momentarily. | Check door lock operation: The driver's door should unlock. | • Faulty actuator<br>• Blown No. 26 (15 A) fuse in the under-dash fuse/relay box<br>• An open in the wire |
| 18 | PNK/BLU | Connect the No. 18 terminal to the No. 8 terminal, and the No. 6 terminal to the No. 17 terminal momentarily. | Check door lock operation: The passenger's door should unlock. | |
| 6 | PNK/BLK | Connect the No. 6 terminal to the No. 8 terminal, and the No. 7 and No. 18 terminals to the No. 17 terminal momentarily. | Check door lock operation: Both doors should lock. | |
| 4 | RED/BLK | Lighting switch ON | Check for voltage to ground: There should be battery voltage. | • Blown No. 23 (10 A) fuse in the under-dash fuse/relay box<br>• Faulty taillight relay<br>• An open in the wire |
| 3 | ORN | Under all conditions | Check for voltage to ground: There should be battery voltage. | • Blown No. 47 (10 A)*1 or (15 A)*2 fuse in the under-hood fuse/relay box<br>• Faulty horn relay<br>• An open in the wire |

* 1: '00-01 models
* 2: '02-03 models

(cont'd)

## Keyless Door Lock Control Unit Input Test (cont'd)

4. Reconnect the connector to the control unit, and perform the following input tests at the keyless door lock control unit connector.

   - If any test indicates a problem, find and correct the cause then recheck the system.
   - If all the input tests prove OK, the control unit must be faulty; replace it.

| Cavity | Wire | Test condition | Test: Desired result | Possible cause if result is not obtained |
|---|---|---|---|---|
| 14 | BLK/WHT | Driver's or passenger's door opened | Check for voltage to ground: There should be 1 V or less. | • Faulty door switch<br>• An open in the wire |
| 2 | GRN/YEL | All doors closed and ceiling/ spotlight switch position "MIDDLE" | Check for voltage to ground: There should be battery voltage. | • Blown No. 24 (7.5 A) fuse in the under-dash fuse/relay box<br>• Blown ceiling/spotlights bulb<br>• An open in the wire |
| 10 | YEL/BLK | Driver's door lock knob in LOCK | Check for voltage to ground: There should be 1 V or less. | • Faulty driver's door lock actuator<br>• Poor ground (G501)<br>• An open in the wire |
| 9 | YEL | Driver's door lock knob in UNLOCK | | |
| 13 | RED/WHT | Ignition key is in the ignition switch | Check for voltage to ground: There should be 1 V or less. | • Faulty ignition key switch<br>• Poor ground (G401)<br>• An open in the wire |
| 15 | WHT | Key cylinder switch position "UNLOCK" | Check for voltage to ground: There should be 1 V or less. | • Faulty driver's key cylinder switch<br>• Poor ground (G501)<br>• An open in the wire |

## Ignition Key Switch Test

1. Remove the steering column upper and lower covers (see page 17-9).

2. Disconnect the 7P connector.

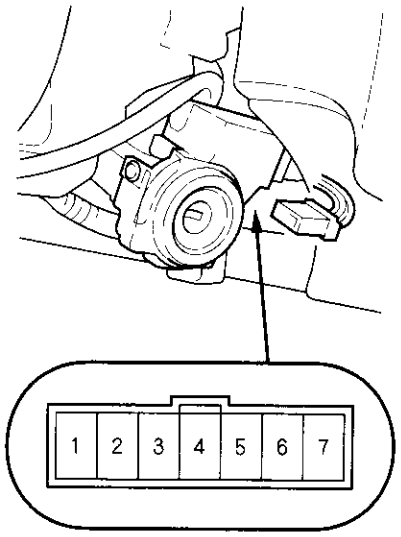


3. Check for continuity between the No. 1 and No. 3 terminals.

   - There should be continuity with the key in the ignition switch.
   - There should be no continuity with the key removed from the ignition switch.

4. If the continuity is not as specified, replace the ignition key switch.

## Driver's Door Lock Knob Switch Test

1. Remove the driver's door panel (see page 20-4).
2. Disconnect the 3P connector (A) from the door lock actuator (B).

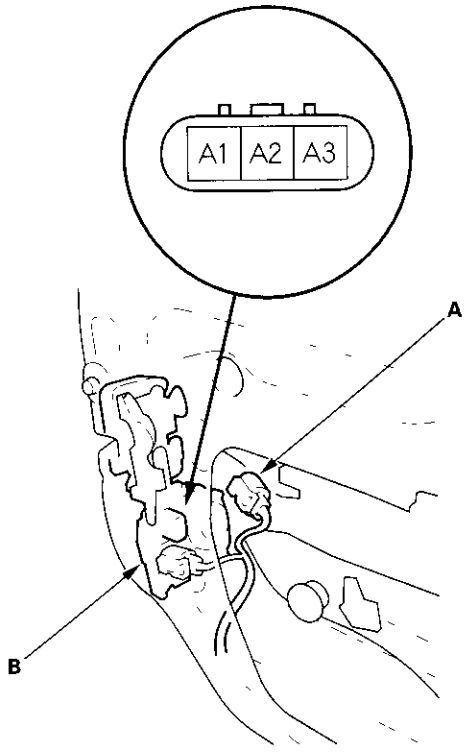


3. Check for continuity between the terminals in each switch position according to the table.

| Terminal / Position | A1 | A2 | A3 |
|---|---|---|---|
| LOCK | ○ | ○ | |
| UNLOCK | | ○ | ○ |

4. If the continuity is not as specified, replace the door lock actuator assembly.

## Driver's Door Lock Actuator Test

1. Remove the driver's door panel (see page 20-4).
2. Disconnect the 2P connector (A) from the actuator (B).

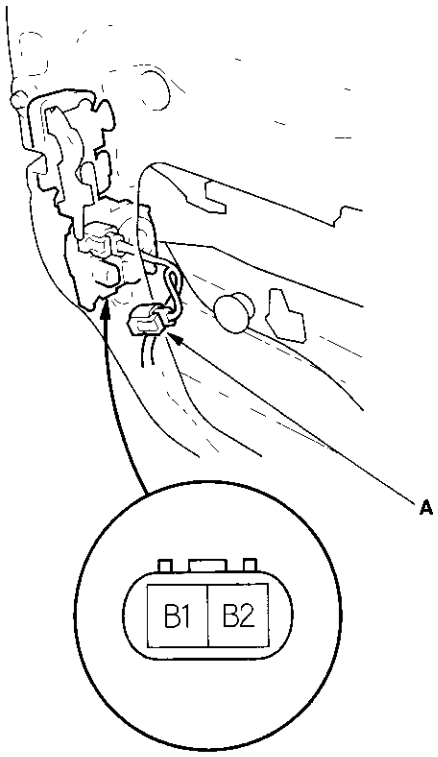


3. Check actuator operation by connecting power and ground according to the table. To prevent damage to the actuator, apply battery voltage only momentarily.

| Terminal / Position | B1 | B2 |
|---|---|---|
| LOCK | ⊕ | ⊖ |
| UNLOCK | ⊖ | ⊕ |

4. If the actuator does not operate as specified, replace the door lock actuator assembly.

## Passenger's Door Lock Actuator Test

1. Remove the passenger's door panel (see page 20-4).
2. Disconnect the 2P connector (A) from the actuator (B).

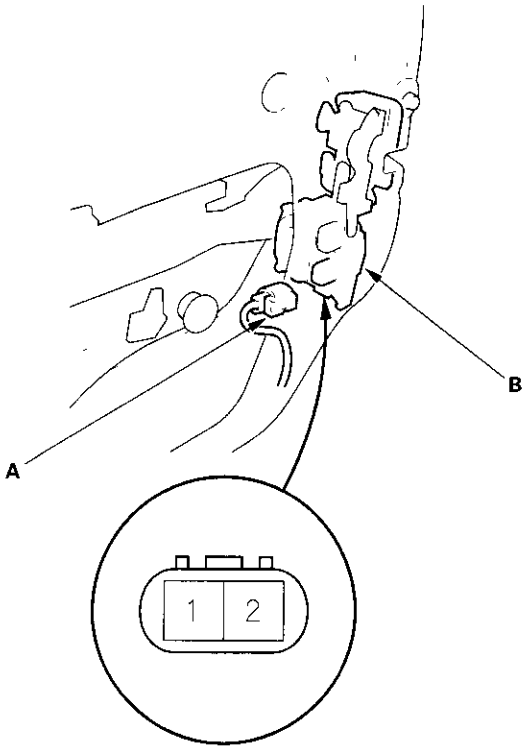


3. Check actuator operation by connecting power and ground according to the table. To prevent damage to the actuator, apply battery voltage only momentarily.

| Terminal / Position | 1 | 2 |
|---|---|---|
| LOCK | ⊕ | ⊖ |
| UNLOCK | ○ | ⊖ |

4. If the actuator does not operate as specified, replace the door lock actuator assembly.

## Driver's Door Key Cylinder Switch Test

1. Remove the door panel (see page 20-4).
2. Disconnect the 2P connector (A) from the key cylinder switch.

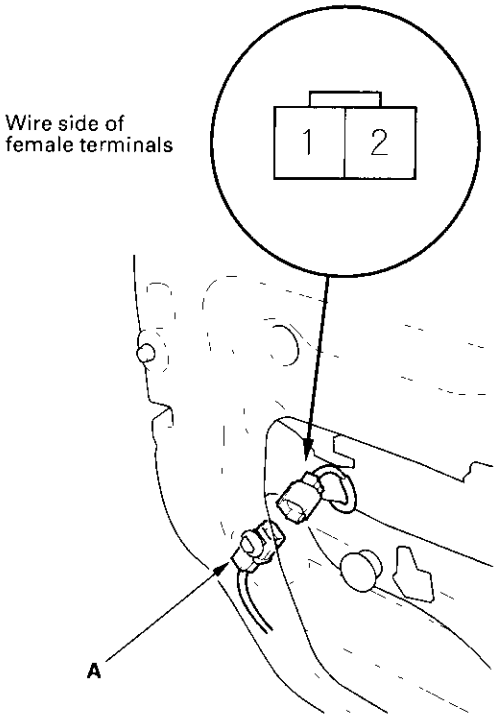


3. Check for continuity between the terminals in each switch position according to the table.

| Terminal / Position | 1 | 2 |
|---|---|---|
| OFF | | |
| UNLOCK | ○ | ○ |

4. If the continuity is not as specified, replace the switch.

## Transmitter Test

NOTE:
- If the doors unlock or lock with the transmitter, but the LED on the transmitter does not come on, the LED is faulty; replace the transmitter.
- If any door is open, you cannot lock the door with the transmitter.
- If you unlocked the doors with the transmitter, but do not open any of the doors within 30 seconds, the doors relock automatically.
- The doors do not lock or unlock with the transmitter if the ignition key is inserted in the ignition switch.

1. Press the lock or unlock button five or six times to reset the transmitter.
   - If the locks work, the transmitter is OK.■
   - If the locks don't work, go to step 2.
2. Open the transmitter and check for water damage.
   - If you find any water damage, replace the transmitter.■
   - If there is no water damage, go to step 3.
3. Replace the transmitter battery (A) with a new one, and try to lock and unlock the doors with the transmitter by pressing the lock or unlock button five or six times.
   - If the doors lock and unlock, the transmitter is OK.■
   - If the doors don't lock and unlock, go to step 4.

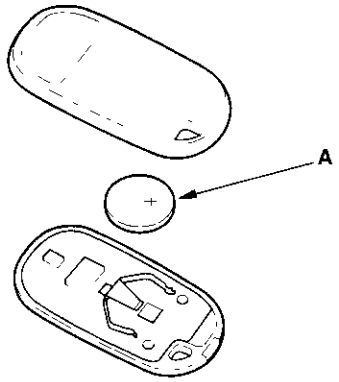


4. Reprogram the transmitter, then try to lock and unlock the doors.
   - If the doors lock and unlock, the transmitter is OK.■
   - If the doors don't lock and unlock, replace the transmitter.■

## Transmitter Programming

Storing transmitter codes: The codes of up to three transmitters can be programmed into the keyless receiver unit memory. (If a fourth code is stored, the code which was input first will be erased.)
NOTE: It is important to maintain the time limits between the steps. Make sure the doors, the hood and the trunk are closed.

1. Turn the ignition switch ON (II).
2. Within 1 to 4 sec., push the transmitter lock or unlock button with the transmitter aimed at the receiver unit behind the driver's side dash.
3. Within 1 to 4 sec., turn the ignition switch OFF.
4. Within 1 to 4 sec., turn the ignition switch ON (II).
5. Within 1 to 4 sec., push the transmitter lock or unlock button with the transmitter aimed at the receiver unit behind the driver's side dash.
6. Within 1 to 4 sec., turn the ignition switch OFF.
7. Within 4 sec., turn the ignition switch ON (II).
8. Within 1 to 4 sec., push the transmitter lock or unlock button with the transmitter aimed at the receiver unit behind the driver's side dash.
9. Within 1 to 4 sec., turn the ignition switch OFF.
10. Within 4 sec., turn the ignition switch ON (II).
11. Within 1 to 4 sec., push the transmitter lock or unlock button with the transmitter aimed at the receiver unit behind the driver's side dash.
12. Confirm you can hear the sound of the door lock actuators. Within 1 to 4 sec., push the transmitter lock or unlock button again. The keyless receiver unit is now in the program mode. You must push the transmitter lock or unlock button of the first transmitter again to program that remote.
13. Within 10 sec., aim the transmitters (up to two additional ones) whose codes you want to store at the receiver unit, and press the transmitter lock or unlock buttons.
    Confirm that you can hear the sound of the door lock actuators after each transmitter code is stored.
14. Turn the ignition switch OFF, and pull out the key.
15. Confirm proper operation of the transmitters with the new code(s).

## Component Location Index

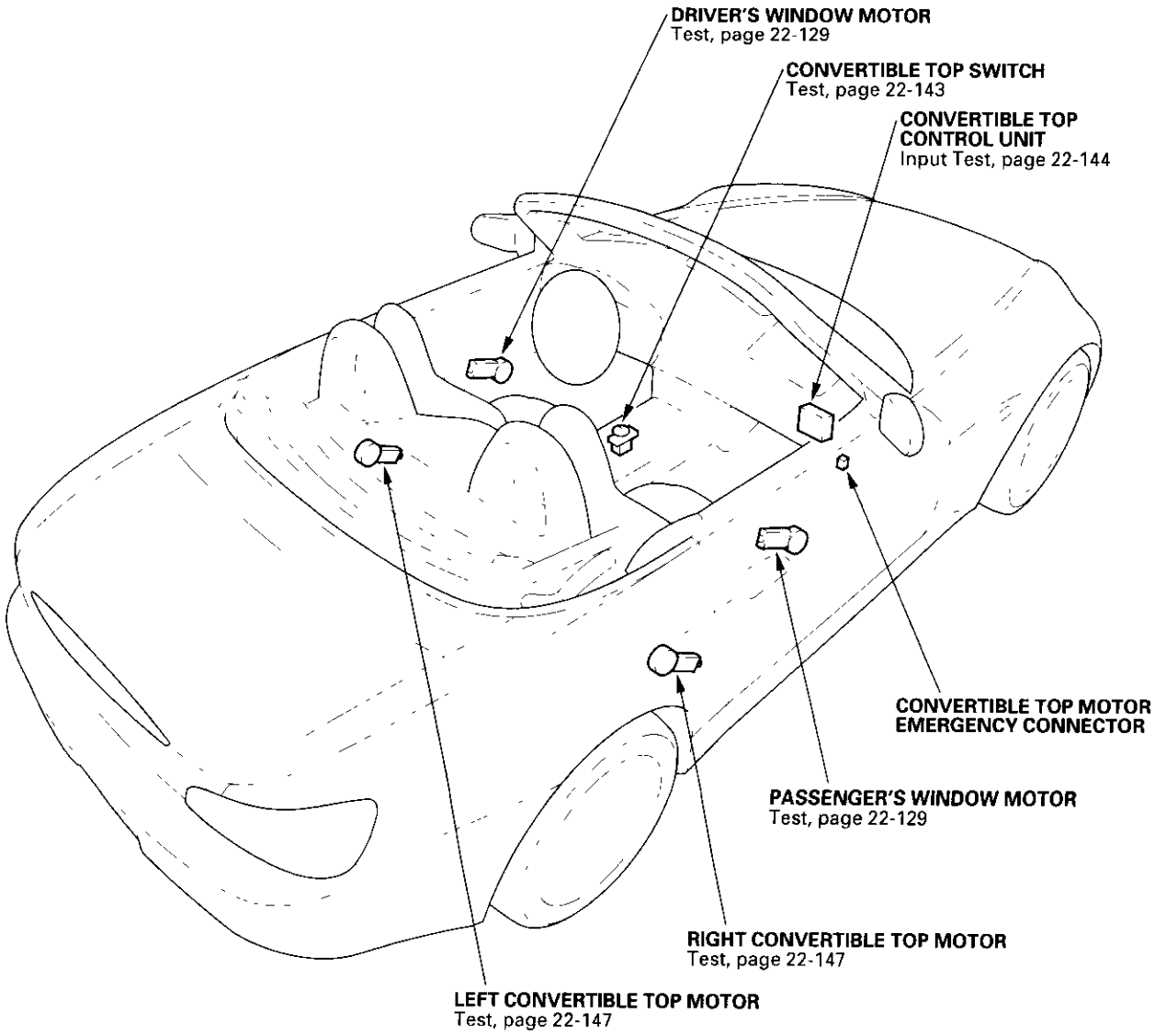

## Circuit Diagram

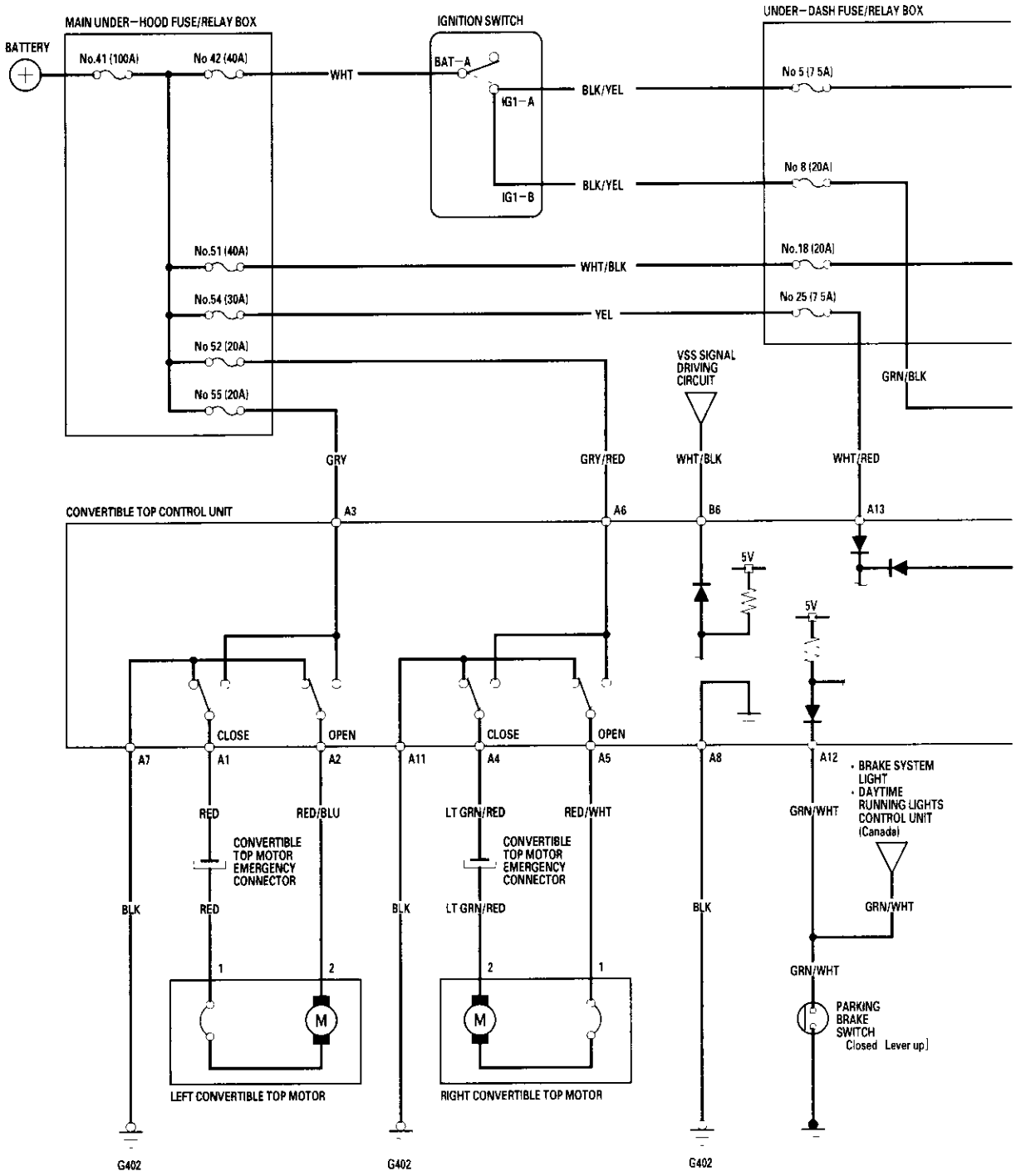

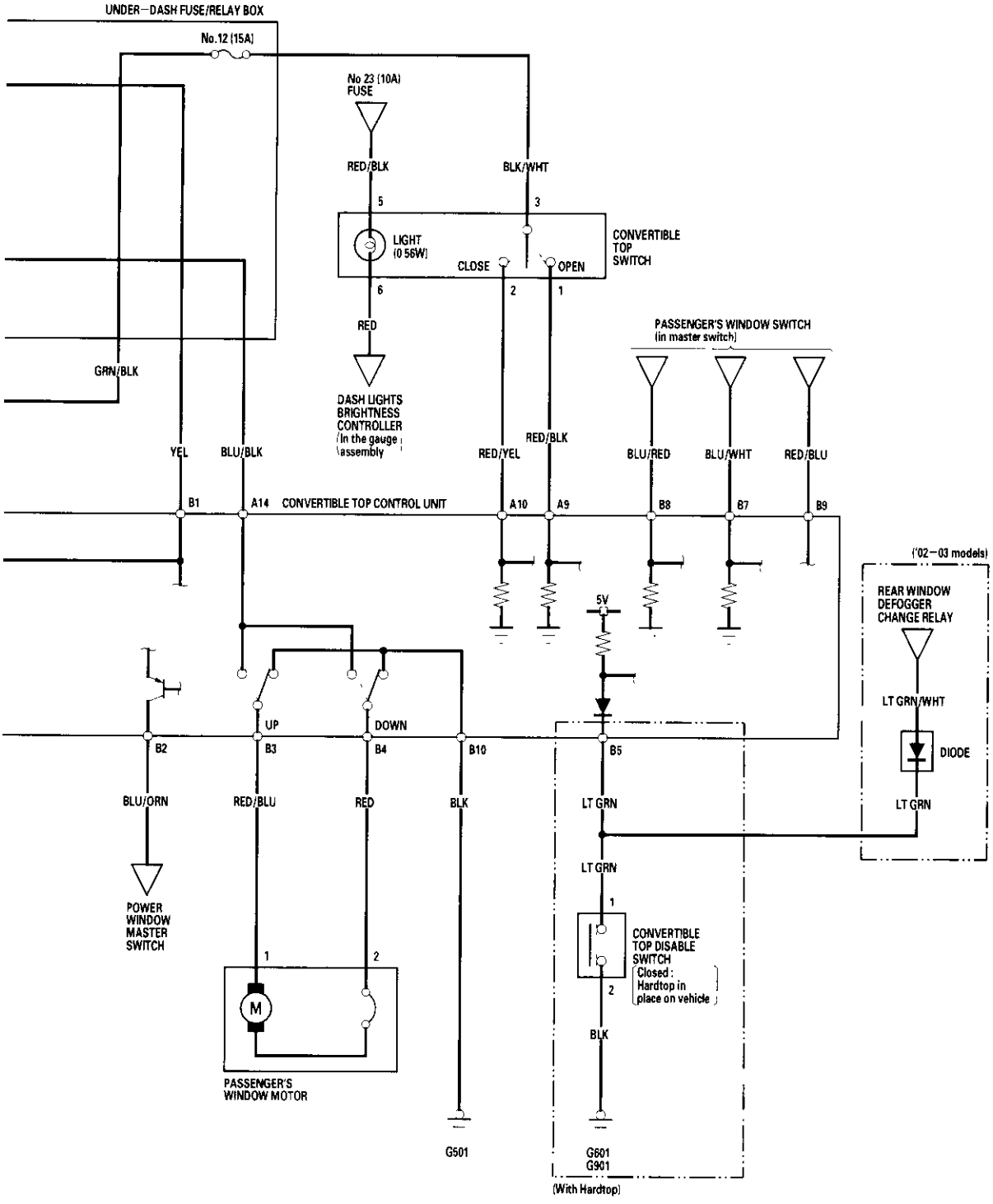
UNDER-DASH FUSE/RELAY BOX
No.12 (15A)
No 23 (10A) FUSE
RED/BLK
BLK/WHT
5
3
LIGHT (0.56W)
CONVERTIBLE TOP SWITCH
CLOSE
OPEN
6
2
1
RED
DASH LIGHTS BRIGHTNESS CONTROLLER (In the gauge assembly)
PASSENGER'S WINDOW SWITCH (in master switch)
GRN/BLK
YEL
BLU/BLK
RED/YEL
RED/BLK
BLU/RED
BLU/WHT
RED/BLU
B1
A14
CONVERTIBLE TOP CONTROL UNIT
A10
A9
B8
B7
B9
('02-03 models)
REAR WINDOW DEFOGGER CHANGE RELAY
5V
LT GRN/WHT
DIODE
LT GRN
UP
DOWN
B2
B3
B4
B10
B5
BLU/ORN
RED/BLU
RED
BLK
LT GRN
LT GRN
1
CONVERTIBLE TOP DISABLE SWITCH
Closed: Hardtop in place on vehicle
2
BLK
POWER WINDOW MASTER SWITCH
1
2
M
PASSENGER'S WINDOW MOTOR
G501
G601
G901
(With Hardtop)

# Convertible Top

## System Description

The convertible top can automatically be opened and closed by operating the convertible top switch.
The convertible top system consists of the convertible top switch, control unit and the motors located on the convertible top assembly. The top switch outputs open and close signals to the control unit. The control unit opens the driver's and the passenger's power windows then about 0.5 second after the windows start to open, the control unit operates the top motors to open or close the top.

## Basic Operation

1. Pull the parking brake lever up.
2. Turn the ignition switch ON (II).

   NOTE: The vehicle must be parked or traveling at no more than 3 mph (5 Km/h).

3. Release the convertible top lock handles.
4. The top opens while pressing the top switch to the OPEN position.
5. The top closes while pressing the top switch to the CLOSE position.
6. Release the top switch to stop the operation of the top.

## Convertible Top Switch Test

1. Remove the center console (see page 20-76).
2. Disconnect the 6P connector (A) from the switch.

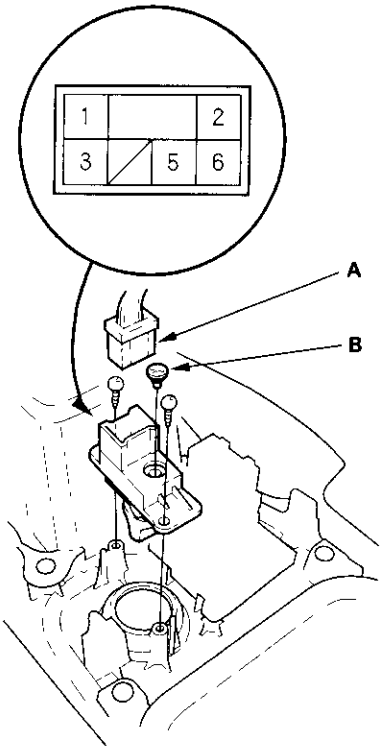


3. Check for continuity between the terminals in each switch position according to the table.

| Terminal / Position | 1 | 2 | 3 | 5 | | 6 |
|---|---|---|---|---|---|---|
| OPEN | ○ | | ○ | | | |
| CLOSE | | ○ | ○ | ○ | ⊗ | ○ |

4. If the continuity is not as specified, replace the illumination bulb (B) or the switch.

## Convertible Top Control Unit Input Test

1. Remove the passenger's dashboard lower cover (see page 20-81).

2. Disconnect the 14P connector (A) and 10P connector (B) from the convertible top control unit (C).

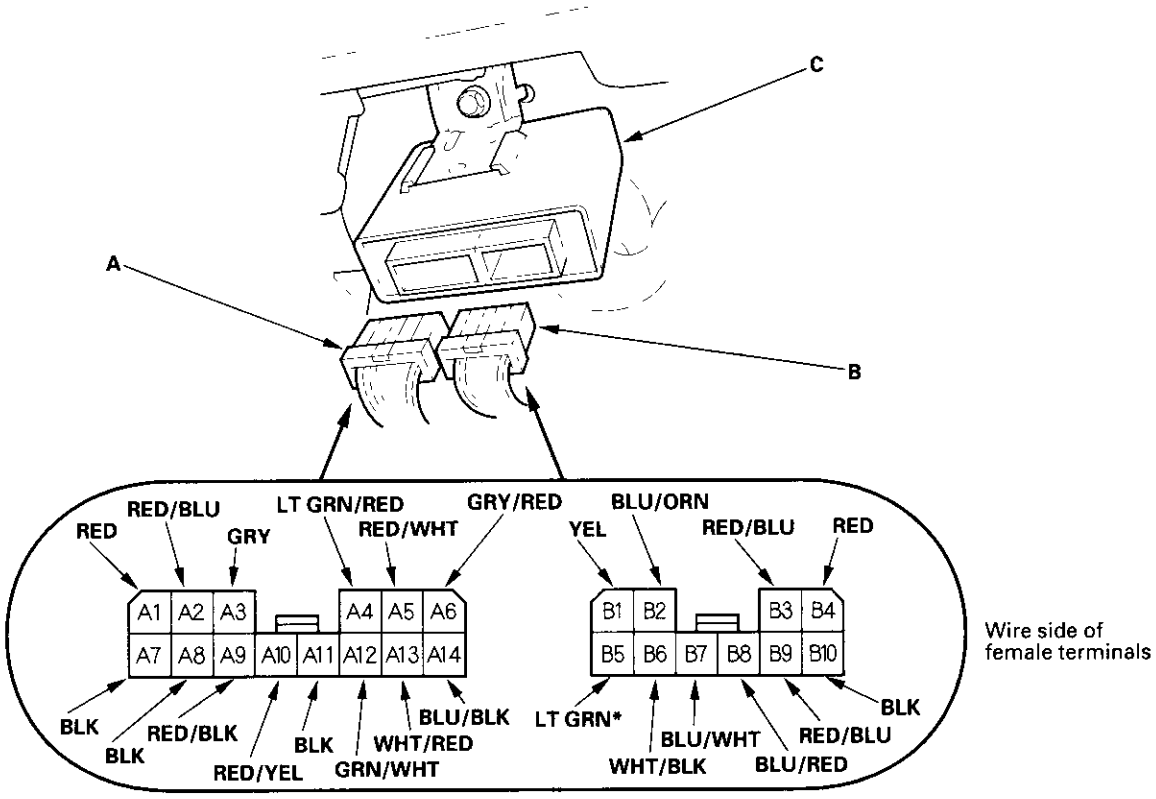


*: With Hardtop

3. Inspect the connector and socket terminals to be sure they are all making good contact.

   - If the terminals are bent, loose or corroded, repair them as necessary, and recheck the system.
   - If the terminals look OK, go to step 4.

4. With the connectors still disconnected, make these input tests at the connectors.

   - If any test indicates a problem, find and correct the cause, then recheck the system.
   - If all the input tests prove OK, go to step 5.

| Cavity | Wire | Test condition | Test: Desired result | Possible cause if result is not obtained |
|---|---|---|---|---|
| A14 | BLU/BLK | Under all conditions | Check for voltage to ground: There should be battery voltage. | • Blown No. 18 (20 A) fuse in the under-dash fuse/relay box<br>• An open in the wire |
| A13 | WHT/RED | Under all conditions | Check for voltage to ground: There should be battery voltage. | • Blown No. 25 (7.5 A) fuse in the under-dash fuse/relay box<br>• An open in the wire |
| A7<br>A8<br>A11 | BLK | Under all conditions | Check for continuity to ground: There should be continuity. | • Poor ground (G402)<br>• An open in the wire |
| B10 | BLK | Under all conditions | Check for continuity to ground: There should be continuity. | • Poor ground (G501)<br>• An open in the wire |
| A6 | GRY/RED | Under all conditions | Check for voltage to ground: There should be battery voltage. | • Blown No. 52 (20 A) fuse in the main under-hood fuse/relay box<br>• An open in the wire |
| A3 | GRY | Under all conditions | Check for voltage to ground: There should be battery voltage. | • Blown No. 55 (20 A) fuse in the main under-hood fuse/relay box<br>• An open in the wire |
| A5 | RED/WHT | Disconnect the left top motor 2P connector.<br>Connect the A5 terminal to the A6 terminal (power) and A4 terminal to the A11 terminal (ground).<br>Assist the left side of the top with your hands. | Check the right top motor operation:<br>It should run (the top moves opens). | • Faulty right top motor<br>• An open in the wire |
| A4 | LT GRN/ RED | Disconnect the left top motor 2P connector.<br>Connect the A4 terminal to the A6 terminal (power) and A5 terminal to the A11 terminal (ground).<br>Assist the left side of the top with your hands. | Check the right top motor operation:<br>It should run (the top moves closes). | • Faulty right top motor<br>• An open in the wire |
| A2 | RED/BLU | Disconnect the right top motor 2P connector.<br>Connect the A2 terminal to the A3 terminal (power) and A1 terminal to the A7 terminal (ground).<br>Assist the right side of the top with your hands. | Check the left top motor operation:<br>It should run (the top moves opens). | • Faulty left top motor<br>• An open in the wire |
| A1 | RED | Disconnect the right top motor 2P connector.<br>Connect the A1 terminal to the A3 terminal (power) and A2 terminal to the A7 terminal (ground).<br>Assist the right side of the top with your hands. | Check the left top motor operation:<br>It should run (the top moves closes). | • Faulty left top motor<br>• An open in the wire |
| B5* | LT GRN | Convertible top disable switch closed | Check for continuity to ground: There should be continuity. | • Faulty convertible top disable switch<br>• Poor ground (G601, G901)<br>• An open in the wire |

*: With Hardtop

(cont'd)

## Convertible Top Control Unit Input Test (cont'd)

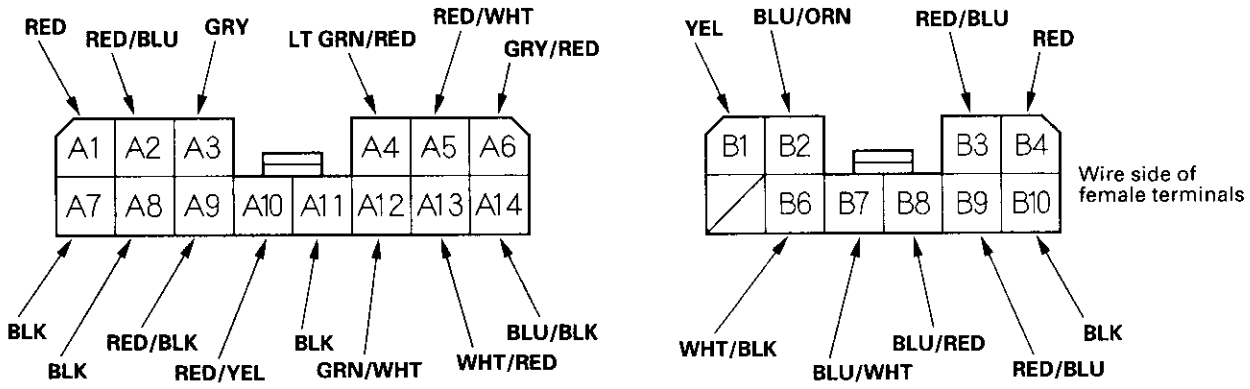


| Cavity | Wire | Test condition | Test: Desired result | Possible cause if result is not obtained |
|---|---|---|---|---|
| B3 | RED/BLU | Connect the B3 terminal to the A14 terminal and B4 terminal to the B10 terminal. | Check the passenger's window motor operation: It should run (the window moves up). | • Faulty passenger's window motor<br>• An open in the wire |
| B4 | RED | Connect the B4 terminal to the A14 terminal and B3 terminal to the B10 terminal. | Check the passenger's window motor operation: It should run (the window moves down). | • Faulty passenger's window motor<br>• An open in the wire |
| B1 | YEL | Ignition switch ON (II) | Check for voltage to ground: There should be battery voltage. | • Blown No. 5 (7.5 A) fuse in the under-dash fuse/relay box.<br>• An open in the wire |
| A12 | GRN/WHT | Parking brake lever up | Check for continuity to ground: There should be continuity. | • Faulty parking brake switch<br>• An open in the wire |
| A9 | RED/BLK | Ignition switch ON (II), top switch OPEN | Check for voltage to ground: There should be battery voltage. | • Blown No. 12 (15 A) fuse in the under-dash fuse/relay box<br>• Faulty top switch<br>• An open in the wire |
| A10 | RED/YEL | Ignition switch ON (II), top switch CLOSE | Check for voltage to ground: There should be battery voltage. | |
| B7 | BLU/WHT | Ignition switch ON (II), power window master switch main switch ON, and passenger's windows switch DOWN. | Check for voltage to ground: There should be battery voltage. | • Blown No. 8 (20 A) fuse in the under-dash fuse/relay box<br>• Faulty power power window master switch<br>• Faulty passenger's window switch<br>• An open in the wire |
| B8 | BLU/RED | Ignition switch ON (II), power window master switch main switch ON, and passenger's window switch UP. | Check for voltage to ground: There should be battery voltage. | |
| B9 | RED/BLU | Ignition switch ON (II), power window master switch main switch ON | Check for voltage to ground: There should be battery voltage. | • Faulty power window master switch<br>• Faulty passenger's window motor<br>• An open in the wire |

5. Reconnect the connectors to the control unit, and make the input tests at the connectors.

- If any test indicates a problem, find and correct the cause, then recheck the system.
- If all the input tests prove OK, the control unit must be faulty; replace it.

| Cavity | Wire | Test condition | Test: Desired result | Possible cause if result is not obtained |
|---|---|---|---|---|
| B2 | BLU/ORN | Ignition switch ON (II), parking brake lever up, operate the top switch | Check for voltage between the B2 and body ground: There should be 0 – 8 V or more repeatedly. | • Faulty top control unit<br>• Faulty power window master switch<br>• An open in the wire |
| B6 | WHT/BLK | Ignition switch ON (II), raise the rear of the vehicle, and rotate one wheel slowly | Check for voltage on the B6 and A8 terminals: There should be 0 – 5 V or more repeatedly. | • Faulty VSS<br>• Faulty VSS signal driving circuit<br>• An open in the wire |

## Convertible Top Motor Test

### Right Top Motor:

1. Remove the right corner gusset (see page 20-38).
2. Disconnect the 2P connector (A) from the right top motor (B).

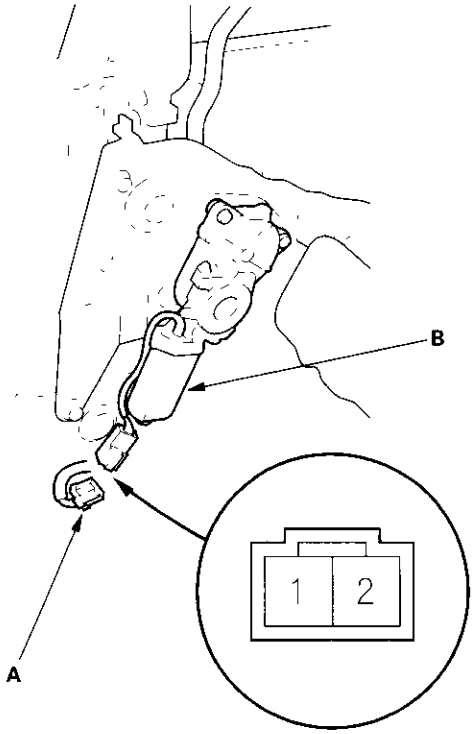


Terminal side of male terminals

3. Assist the left side of the top with your hands.
4. Test the motor in each direction by connecting battery power and ground according to the table.

| Terminal / Direction | 1 | 2 |
|---|---|---|
| OPEN | ⊕ | ⊖ |
| CLOSE | ⊖ | ⊖ |

5. If the motor does not operate as specified, replace the motor.
6. If the top does not work because of a top motor failure, go to step 7 to close the top manually.
7. Remove the passenger's dashboard lower cover (see page 20-81).
8. Disconnect the convertible top motor emergency 2P connector (A).

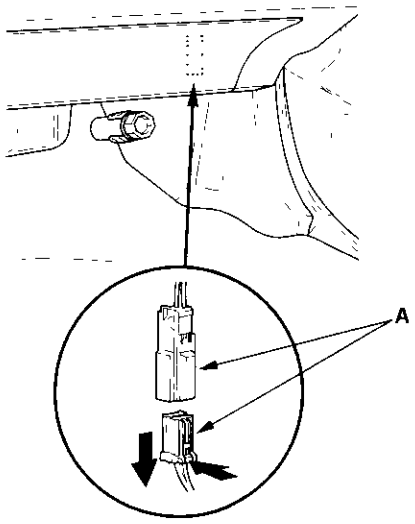


9. Close the top manually.

(cont'd)

## Convertible Top Motor Test (cont'd)

### Left Top Motor:

1. Remove the left corner gusset (see page 20-38).
2. Disconnect the 2P connector (A) from the left top motor (B).

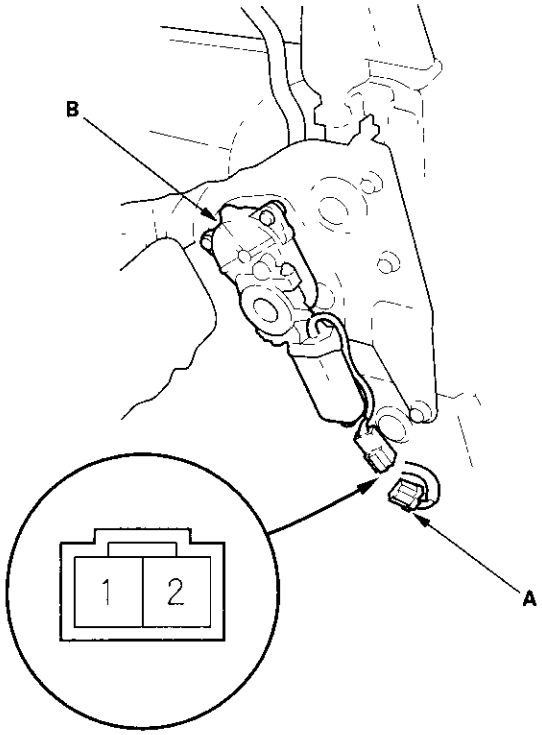


Terminal side of male terminals

3. Assist the right side of the top with your hands.
4. Test the motor in each direction by connecting battery power and ground according to the table.

| Terminal / Position | 1 | 2 |
|---|---|---|
| OPEN | ⊖ | ⊕ |
| CLOSE | ⊕ | ⊖ |

5. If the motor does not operate as specified, replace the motor.
6. If the top does not work because of a top motor failure, go to step 7 to close the top manually.
7. Remove the passenger's dashboard lower cover (see page 20-81).
8. Disconnect the convertible top motor emergency 2P connector (A).

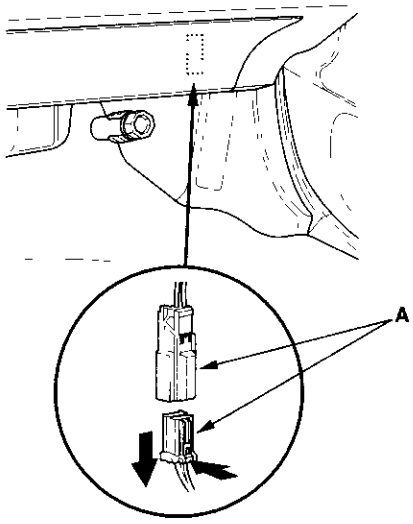


9. Close the top manually.

# Removable Hardtop

## Component Location Index

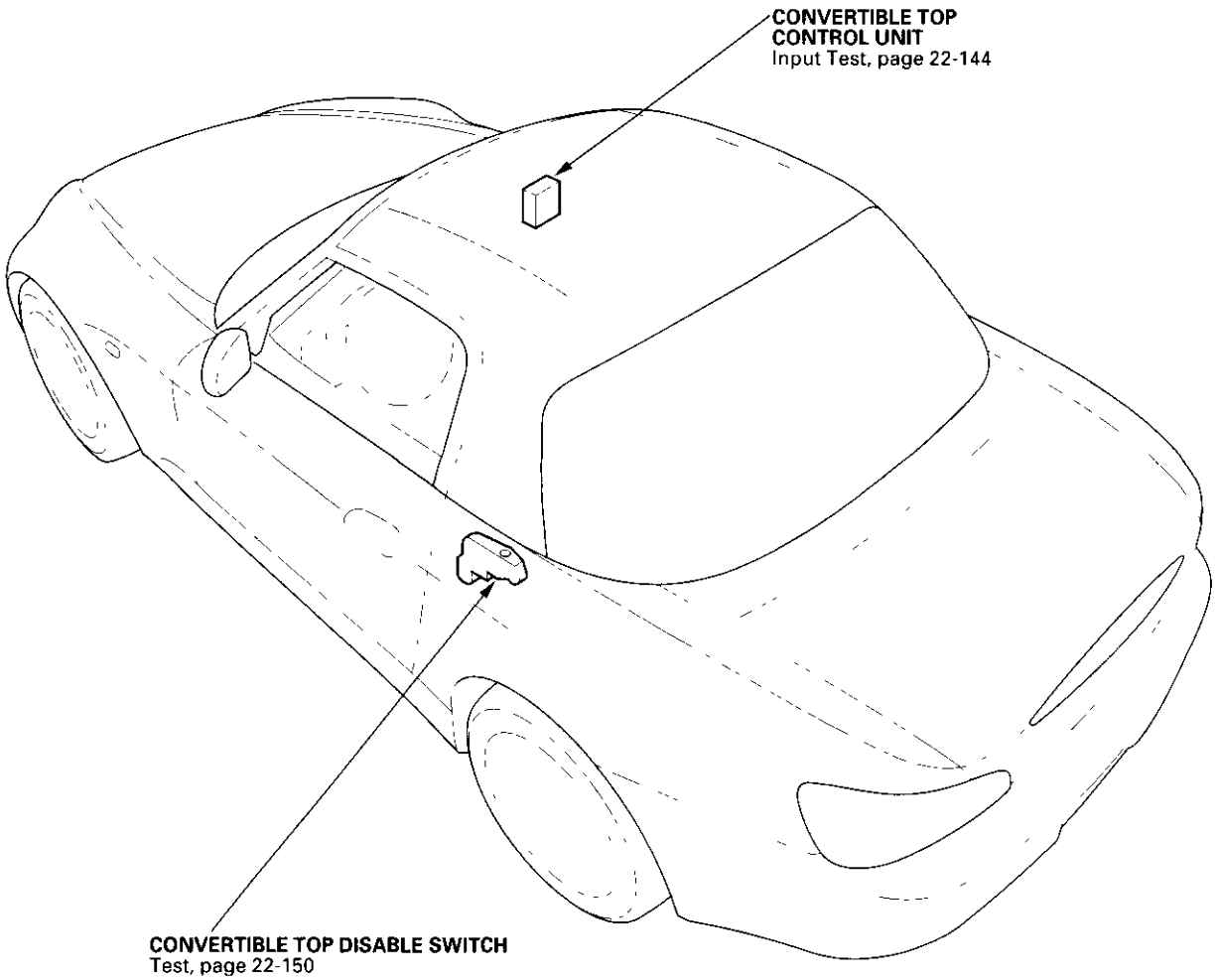

## Convertible Top Disable Switch Test

NOTE: For the convertible top disable switch circut diagram, refer to the Convertible Top Circuit Diagram (see page 22-140)and the Rear Window Defogger Circuit Diagram (see page 22-153).

1. Remove the left rear side trim (see page 20-70).
2. Disconnect the 2P connector (A) from the convertible top disable switch (B).

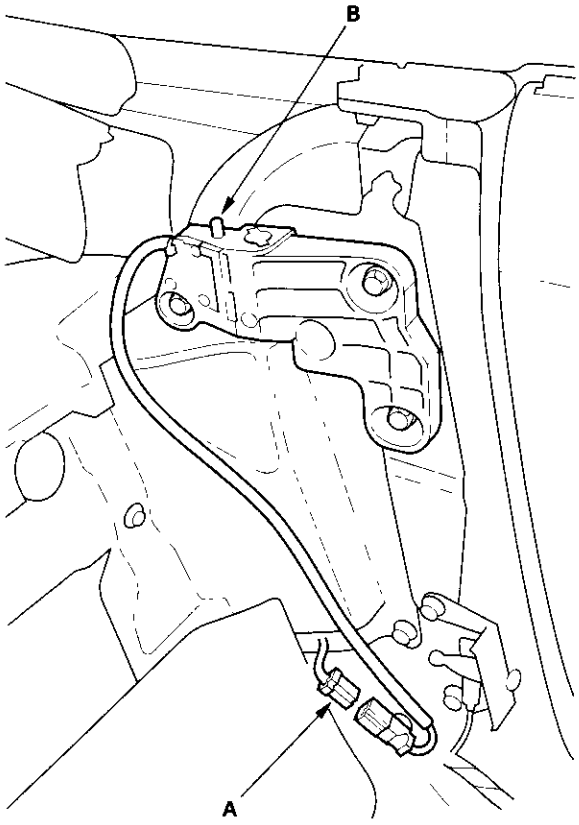


3. Push the convertible top disable switch.

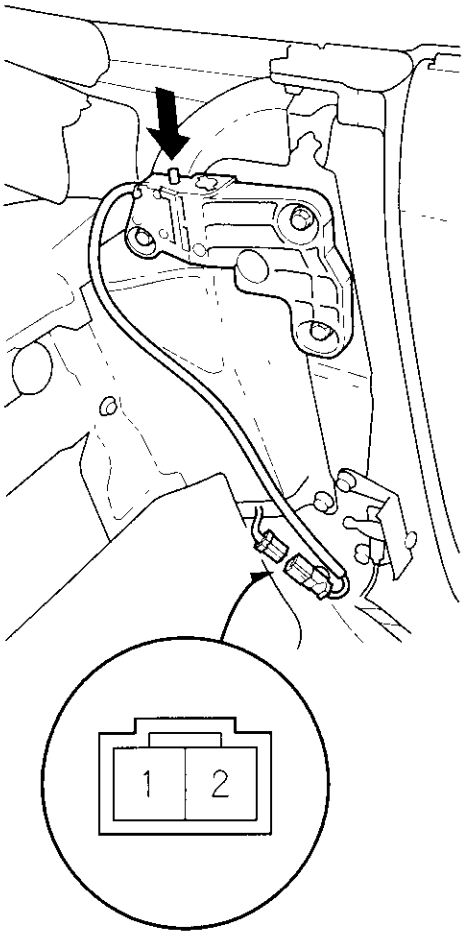


Terminal side of male terminals

4. Check for continuity between the No. 1 and No. 2 terminals.
   There should be continuity.
5. If the continuity is not as specified, replace the switch.

# Rear Window Defogger

## Component Location Index

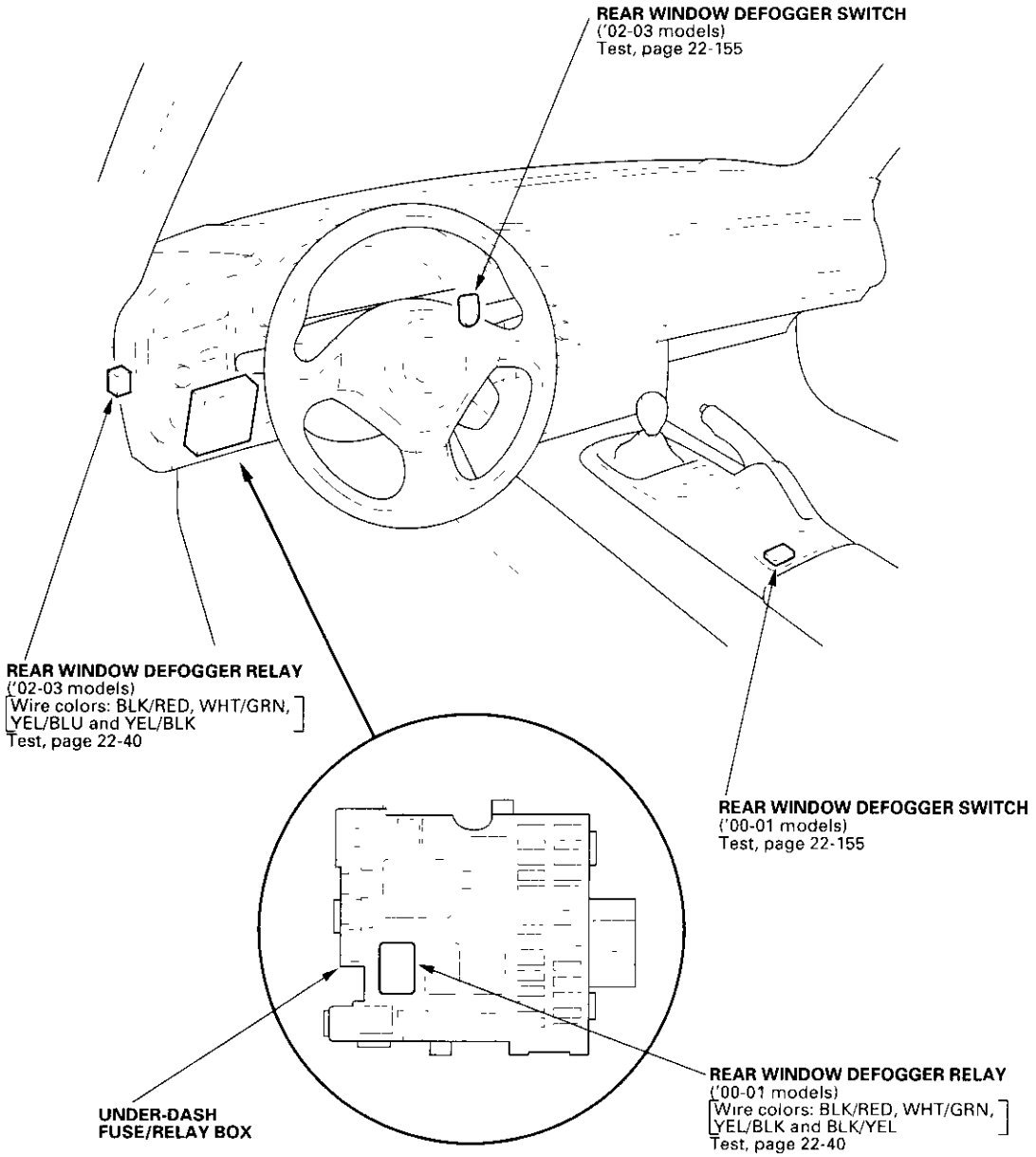


(cont'd)

## Component Location Index (cont'd)

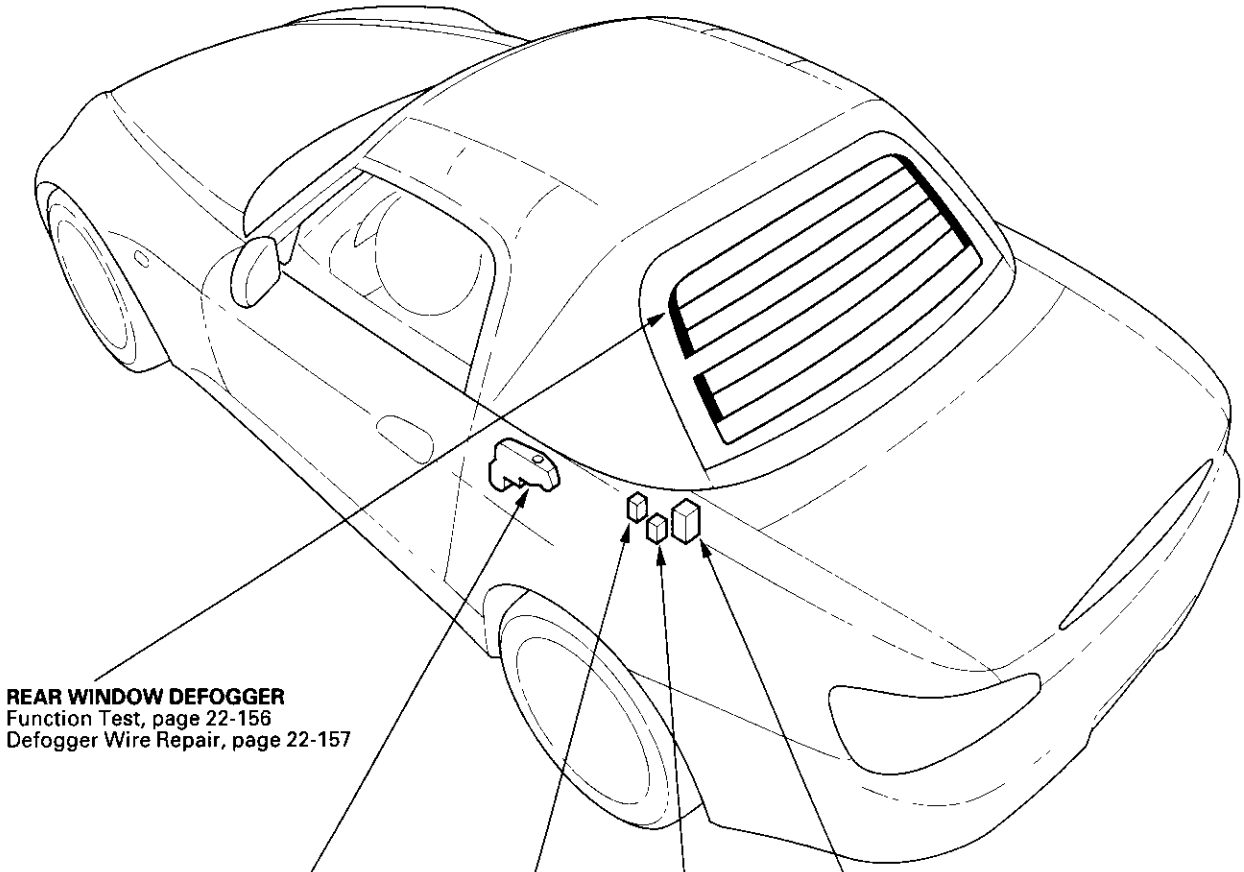

## Circuit Diagram

**'00-01 models**

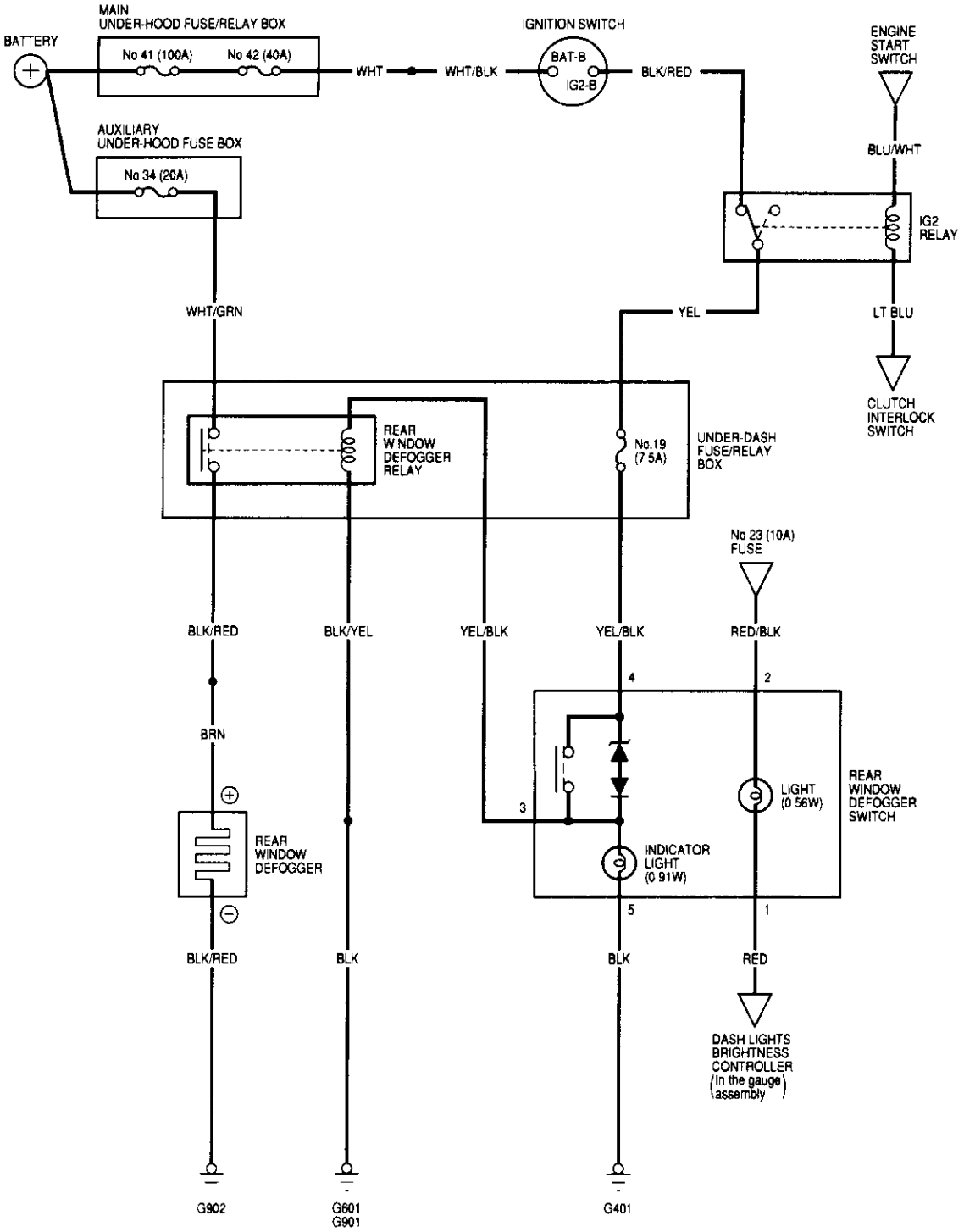

## Circuit Diagram (cont'd)

**'02-03 models**

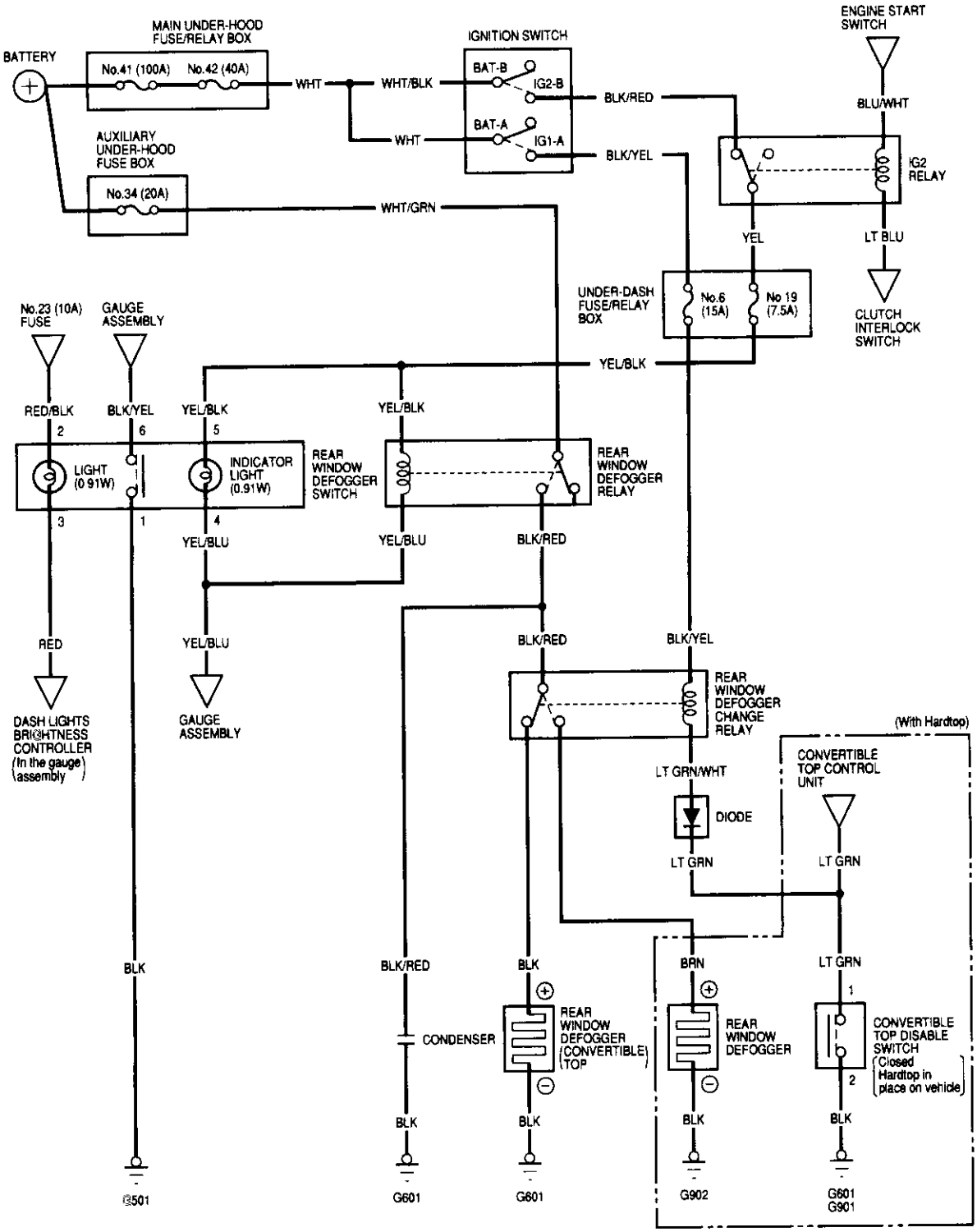

## Switch Test

### '00-01 models:

1. Remove the center console (see page 20-55).
2. Remove the rear window defogger switch (A) from the center console, then disconnect the 5P connector (B).

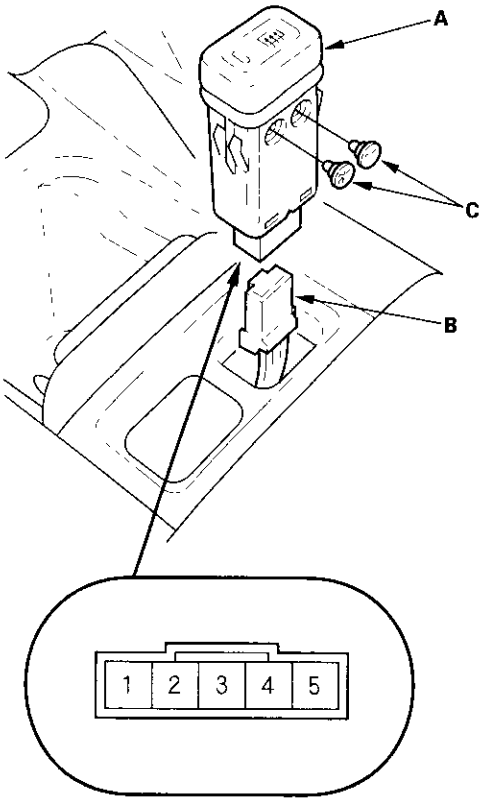


3. Check for continuity between the terminals in each switch position according to the table.

| Position \ Terminal | 1 | 2 | 3 | 4 | 5 |
|---|---|---|---|---|---|
| OFF | ○—(R)—○ | | ○ | ○—(R)—○ | |
| ON | ○—(R)—○ | | ○—○ | ○—(R)—○ | |

4. If the continuity is not as specified, replace the illumination bulbs (C) or the switch.

### '02-03 models:

1. Remove the instrument panel (see page 20-57).
2. Remove the rear window defogger switch (A), then disconnect the 6P connector (B).

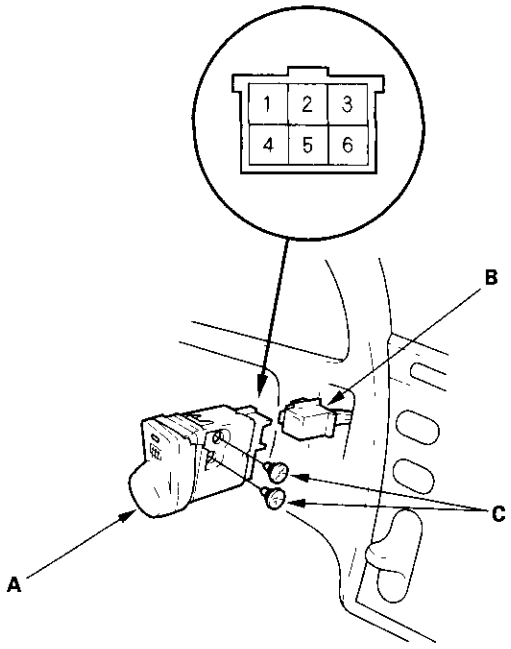


3. Check for continuity between the terminals in each switch position according to the table.

| Position \ Terminal | 2 | 3 | 1 | 6 | 4 | 5 |
|---|---|---|---|---|---|---|
| OFF | ○—(R)—○ | ○ | | | ○—(R)—○ | |
| ON | ○—(R)—○ | ○ | ○—○ | | ○—(R)—○ | |

4. If the continuity is not as specified, replace the illumination bulbs (C) or the switch.

## Function Test

NOTE: Be careful not to scratch or damage the defogger wires with the tester probe.

1. Check for voltage between the positive terminal (A) and body ground with the ignition switch and defogger switch ON.
   There should be battery voltage.

   - If there is no voltage, check for:
     - faulty defogger relay.
     - faulty defogger change relay ('02-03 models).
     - faulty diode ('02-03 models).
     - an open in the wire.
   - If there is battery voltage, go to step 2.

**Hardtop:**

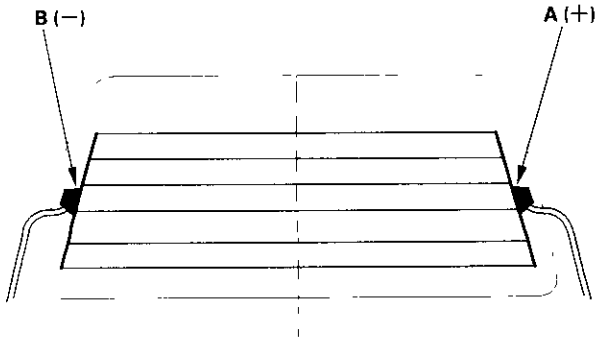


**Convertible Top ('02-03 models):**

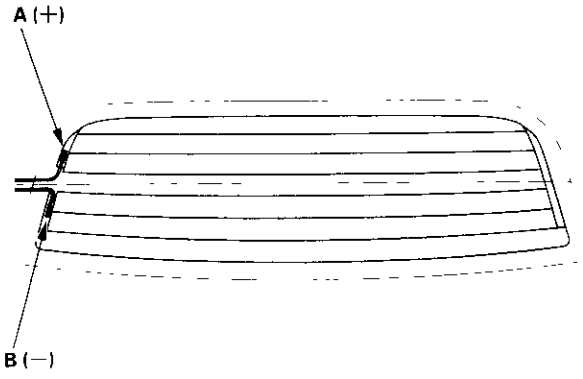


2. Check for continuity between the negative terminal (B) and body ground.
   If there is no continuity, check for an open in the defogger ground wire.

3. Touch the voltmeter positive probe to the halfway point of each defogger wire, and the negative probe to the negative terminal.
   There should be approximately 6 V with the ignition switch and the defogger switch ON.

   - If the voltage is as specified, the defogger wire is OK.
   - If the voltage is not as specified, repair the defogger wire.
     - If it is more than 6 V, there is a break in the negative half of the wire.
     - If it is less than 6 V, there is a break in the positive half of the wire.

## Defogger Wire Repair

NOTE: To make an effective repair, the broken section must be no longer than one inch.

1. Lightly rub the area around the broken section (A) with fine steel wool, then clean it with alcohol.

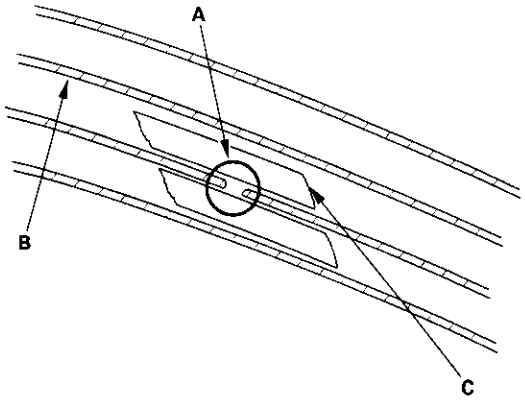


2. Carefully mask above and below the broken portion of the defogger wire (B) with cellophane tape (C).

3. Thoroughly mix the silver conductive paint using a small brush, apply a heavy coat of the paint extending about 1/8″ on both sides of the break. Allow 25 minutes to dry.

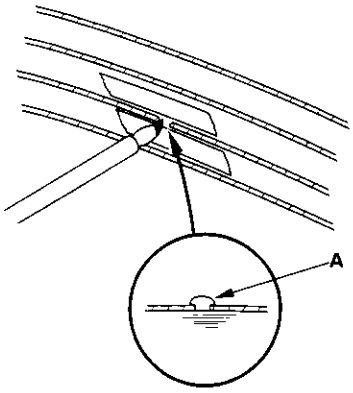


4. Check for continuity in the repaired wire.

5. Apply a second coat of paint in the same way. Let it dry 3 hours before removing the tape.

# Restraints


## Restraints

Special Tools ..... 23-2

## Seat Belts

Component Location Index ..... 23-3
Seat Belt Replacement ..... 23-4
Inspection ..... 23-7

## SRS (Supplemental Restraint System)

Component Location Index ..... 23-9
Precautions and Procedures ..... 23-10
General Troubleshooting Information ..... 23-17
Erasing the DTC Memory ..... 23-19
Troubleshooting Intermittent Failures ..... 23-19
DTC Troubleshooting Index ..... 23-20
Symptom Troubleshooting Index ..... 23-21
System Description ..... 23-22
Circuit Diagram ..... 23-23
DTC Troubleshooting ..... 23-24
SRS Indicator Circuit Troubleshooting ..... 23-55
Component Replacement/Inspection
*After Deployment* ..... 23-64
Driver's Airbag Replacement ..... 23-65
Passenger's Airbag Replacement ..... 23-67
Airbag Disposal ..... 23-69
Cable Reel Replacement ..... 23-72
SRS Unit Replacement ..... 23-75




## Special Tools

| Ref.No. | Tool Number | Description | Qty |
|---|---|---|---|
| ①*1 | 07HAZ-SG00500 | Deployment Tool | 1 |
| ② | 07PAZ-0010100 | SCS Service Connector | 1 |
| ③ | 07SAZ-TB4011A | SRS Inflator Simulator | 1 |
| ④ | 07TAZ-SZ5011A | SRS Simulator Lead C | 1 |
| ⑤*2 | 07TAZ-001020A | Backprobe Adapter, 17 mm | 2 |

*1: Included in SRS Tool Set 07MAZ-SM5000B
*2: Use with the stacking patch cords from T/N 07SAZ-001000A, Backprobe Set.

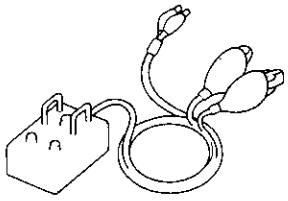

①

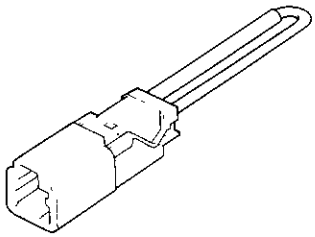

②

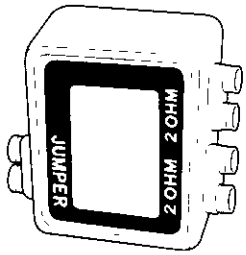


③

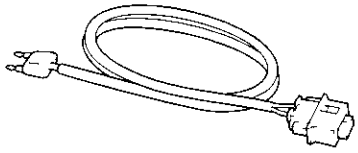

④

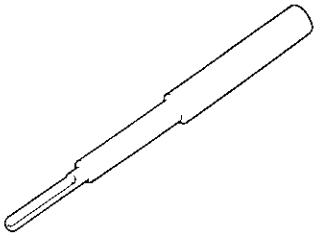

⑤

## Component Location Index

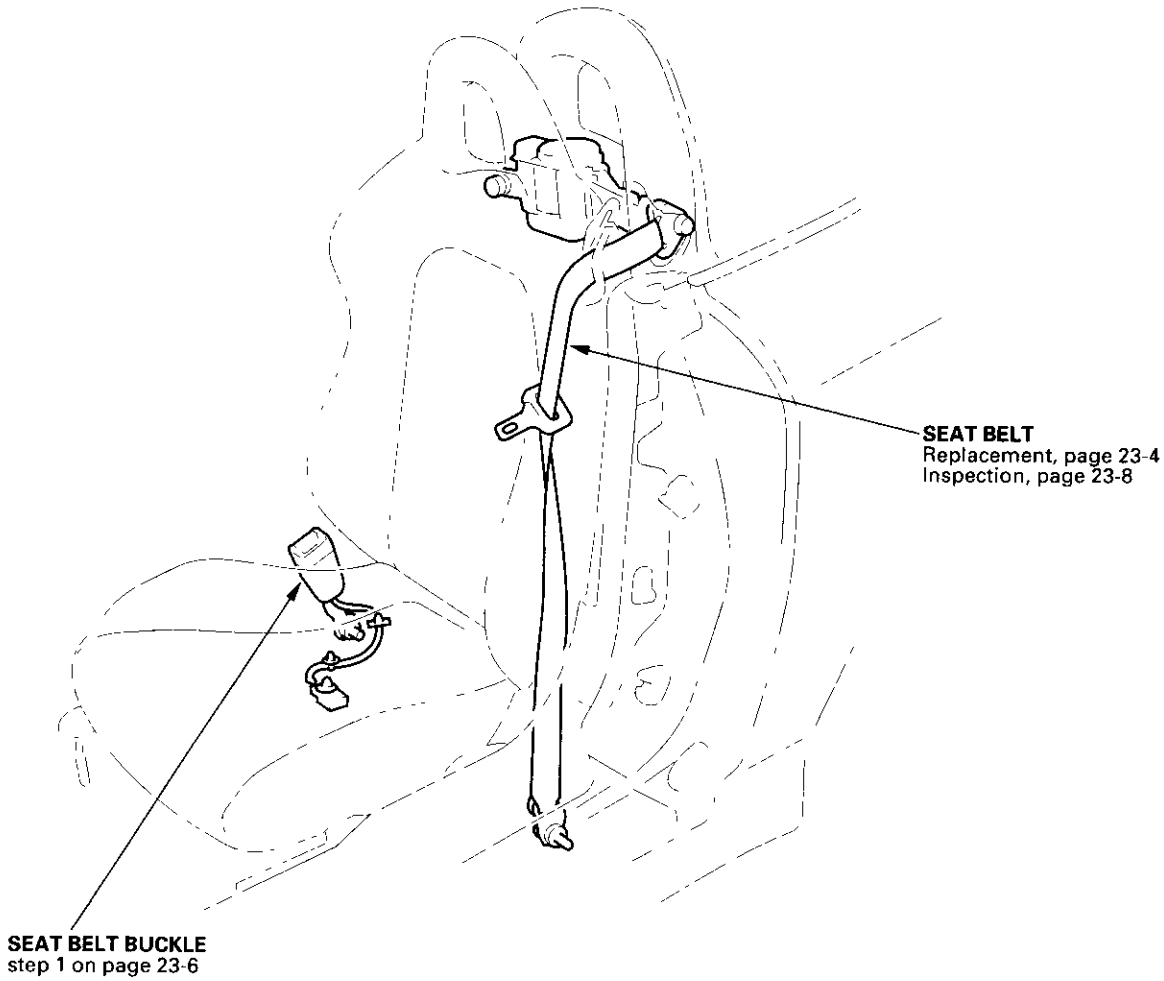

## Seat Belt Replacement

SRS components are located in this area. Review the SRS component locations (see page 23-9) and the precautions and procedures (see page 23-10) in the SRS section before performing repairs or service.

NOTE: Check the seat belts for damage, and replace them if necessary. Be careful not to damage them during removal and installation.

### Seat Belt

NOTE:
- Make sure you have the anti-theft code for the radio, then write down the frequencies for the preset buttons.
- Disconnect the negative cable from the battery, and wait at least 3 minutes before beginning work.

1. Remove these items:
   - Seat (see page 20-86)
   - Rear side trim (see page 20-70)
   - Spare tire cover (see page 20-73) and spare tire
   - Rear tray/roll bar and upper trim assembly (see page 20-71)

2. Remove the seat belt and retractor in numbered sequence.

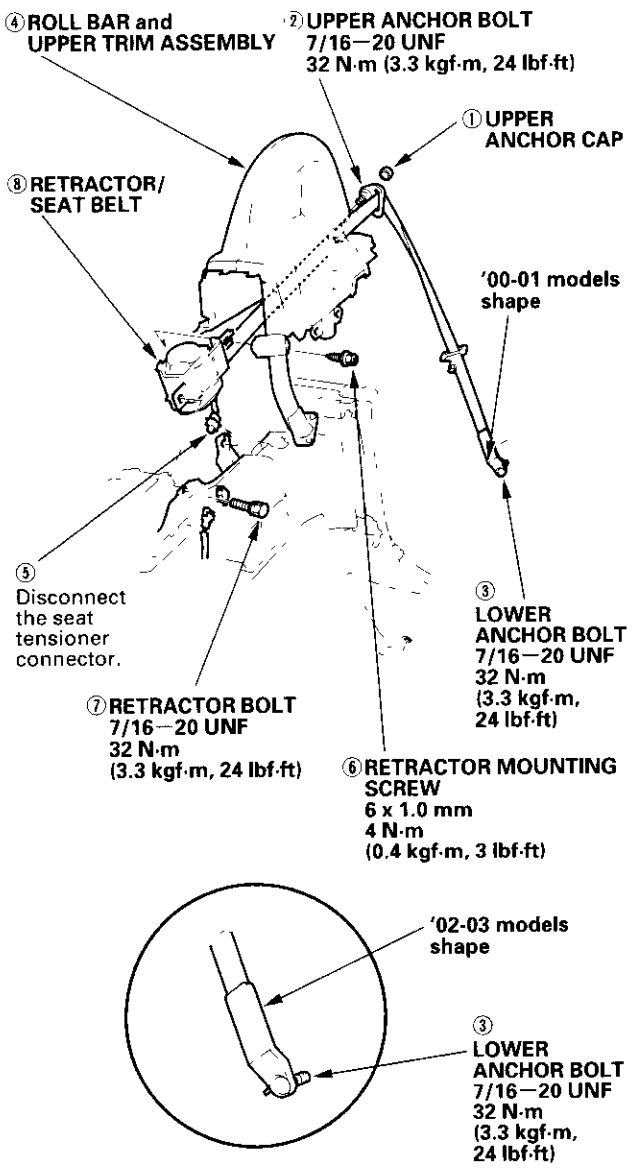

3. Install the belt in the reverse order of removal, and note these items:

   - Check that the retractor locking mechanism functions (see page 20-8).
   - Assemble the washers, collar and busing on the upper and lower anchor bolts. Refer to the Anchor Bolt Construction (see page 20-7).
   - Apply liquid thread lock to the anchor bolts before reinstallation.
   - Before installing the anchor bolts, make sure there are no twists or kinks in the seat belt.
   - Make sure the seat belt tensioner connector is plugged in properly.
   - Reconnect the negative cable to the battery.
   - Enter the anti-theft code for the radio, then enter the customer's radio station presets.
   - Reset the clock.
   - Do the PCM idle lean procedure (see page 11-100).

(cont'd)

## Seat Belt Replacement (cont'd)

### Seat Belt Buckle

1. Remove the seat (see page 20-86).

   NOTE: To get to the seat belt switch connector, remove the seat cushion from the inner seat track.

2. Remove the seat belt buckle in numbered sequence.

3. Install the buckle in the reverse order of removal, and note these items:

   - Assemble the washers on the center anchor bolt. Refer to the Anchor Bolt Construction.
   - Apply liquid thread lock to the center anchor bolt before reinstallation.
   - Apply liquid thread lock to the seat mounting bolts before reinstallation.

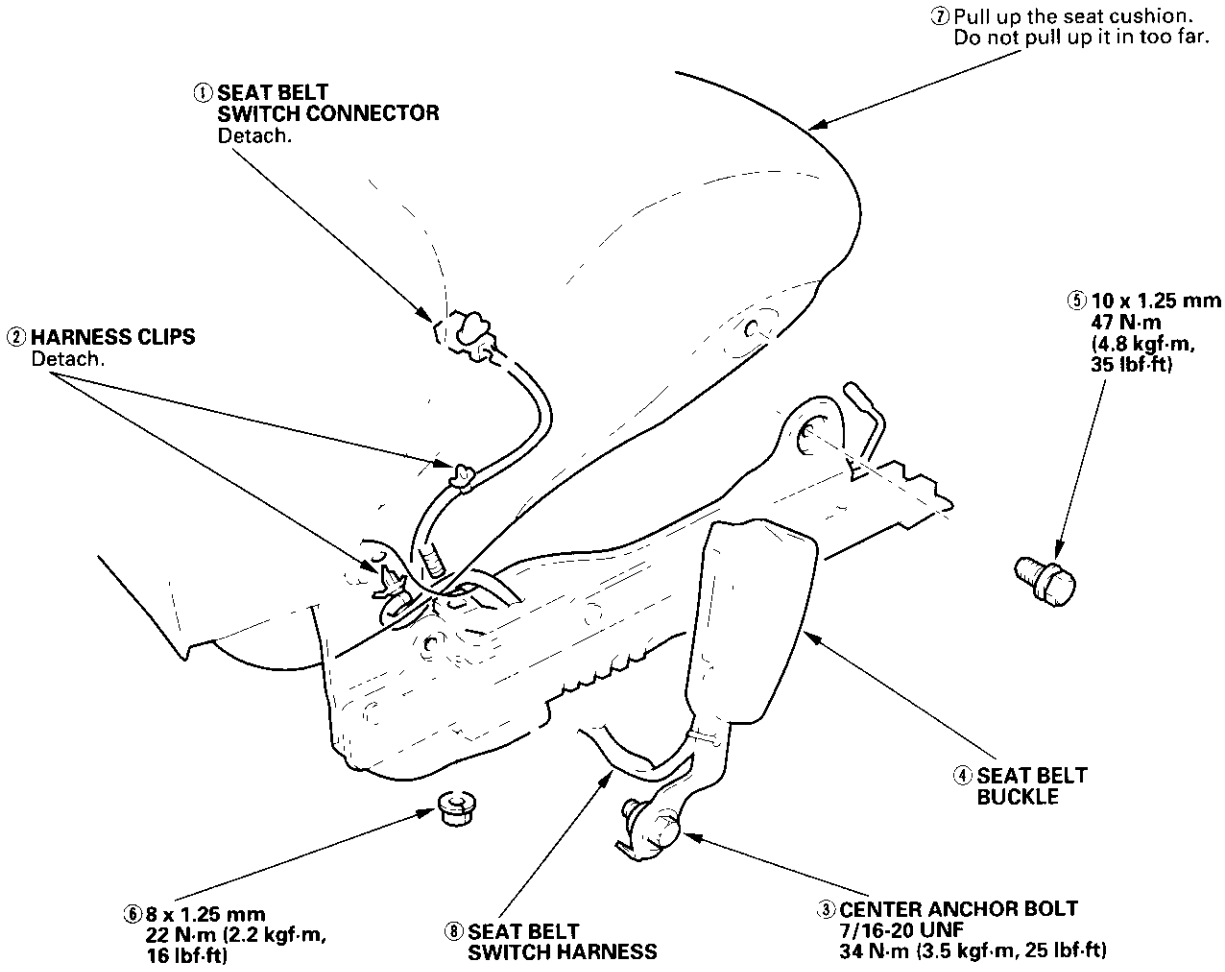

## Anchor Bolt Construction

**Upper anchor bolt construction:**

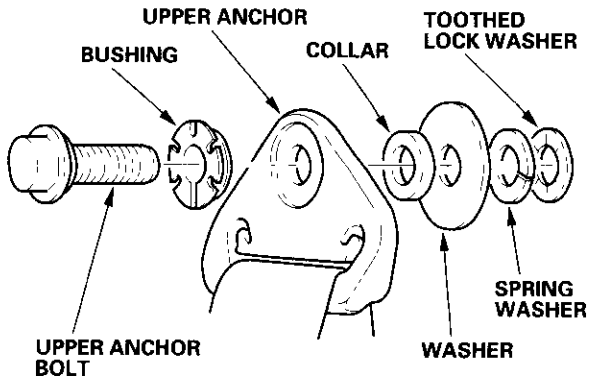


**Lower anchor bolt construction:**
**'00-01 models**

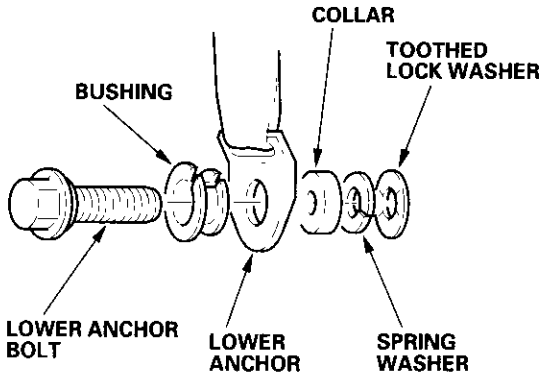


**'02-03 models**

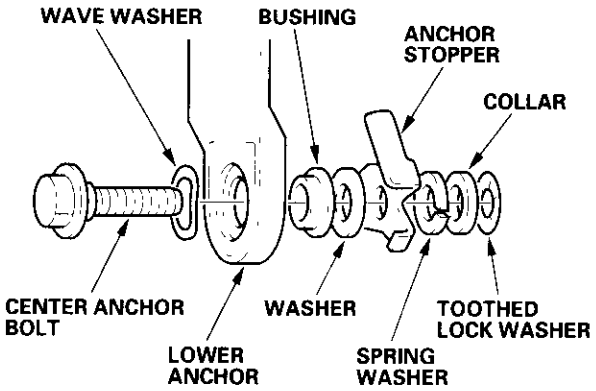


**Center anchor bolt construction:**

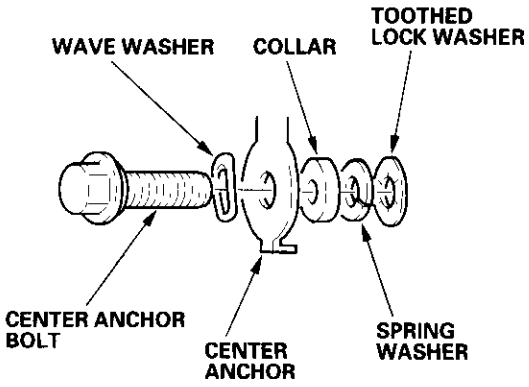

## Inspection

SRS components are located in this area. Review the SRS component locations (see page 23-9) and the precautions and procedures (see page 23-10) in the SRS section before performing repairs or service.

### Retractor

1. Before installing the retractor, check that the seat belt can be pulled out freely.

2. Make sure that the seat belt does not lock when the retractor (A) is leaned slowly up to 15° from the mounted position. The seat belt should lock when the retractor is leaned over 40°. Do not attempt to disassemble the retractor.

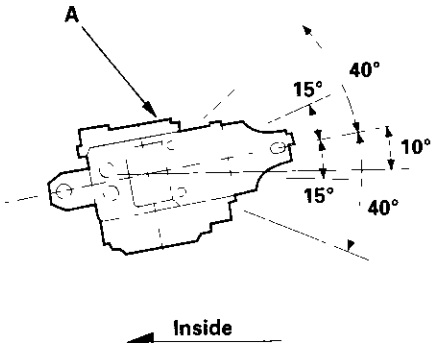


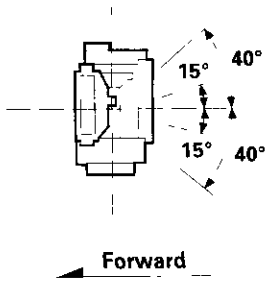


3. Replace the seat belt with a new assembly if there is any abnormality. Do not disassemble any part of the seat belt for any reason.

### In-vehicle

1. Check that the seat belt is not twisted or caught on anything.

2. After installing the anchors, check for free movement on the anchor bolts. If necessary, remove the anchor bolts and check that the washers and other parts are not damaged or improperly installed.

3. Check the seat belts for damage or discoloration. Clean with a shop towel if necessary. Use only soap and water to clean.

   NOTE: Dirt build-up in the loops of the upper anchors can cause the seat belts to retract slowly. Wipe the inside of the loops with a clean cloth dampened in isopropyl alcohol.

4. Check that the seat belt does not lock when pulled out slowly. The seat belt is designed to lock only during a sudden stop or impact.

5. Make sure that the seat belt will retract automatically when released.

6. On the passenger's seat belt, check the seat belt retractor locking mechanism ALR (automatic locking retractor). This function is for child seats:

   -1 Pull the seat belt all the way out to engage the ALR. The seat belt should retract with a ratcheting sound, but not extend. This is normal.

   -2 To disengage the ALR, release the seat belt and allow it to fully retract, then pull the seat belt out part-way. The seat belt should retract and extend normally.

7. Replace the seat belt with a new assembly if there is any abnormality. Do not disassemble any part of the seat belt for any reason.

## Component Location Index

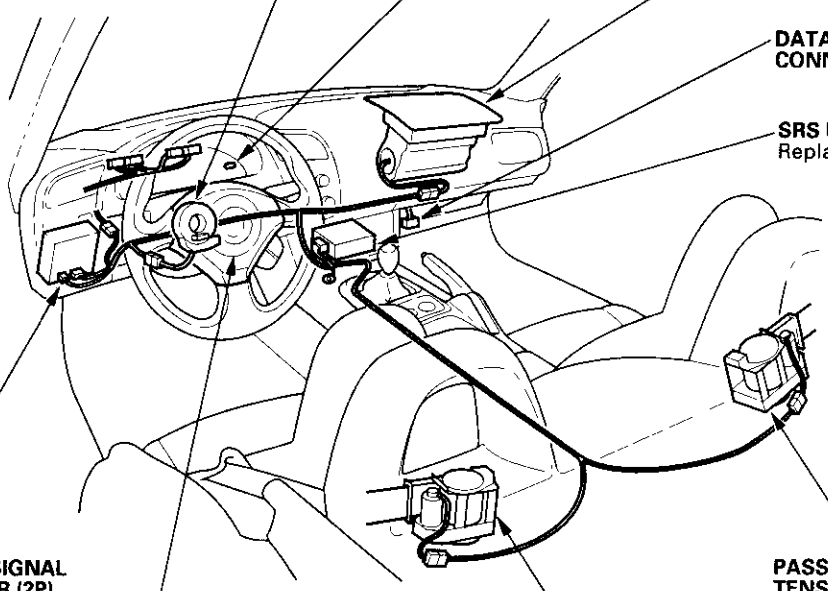

**CABLE REEL**
Replacement, page 23-72

**SRS INDICATOR LIGHT**
Troubleshooting, page 23-55

**PASSENGER'S AIRBAG**
Replacement, page 23-67
Disposal, page 23-69

**DATA LINK CONNECTOR (DLC) (16P)**

**SRS UNIT**
Replacement, page 23-75

**MEMORY ERASE SIGNAL (MES) CONNECTOR (2P) [GRN, GRN]**

**DRIVER'S AIRBAG**
Replacement, page 23-65
Disposal, page 23-69

**PASSENGER'S SEAT BELT TENSIONER**
Replacement, page 23-4
Disposal, page 23-69

**DRIVER'S SEAT BELT TENSIONER**
Replacement, page 23-4
Disposal, page 23-69

## Precautions and Procedures

### General Precautions

Read the following precautions carefully before performing airbag system service. Observe the instructions described in this manual, or the airbags could accidentally deploy and cause damage or injuries.

- Except when performing electrical inspections, always turn the ignition switch OFF, disconnect the negative cable from the battery, and wait at least 3 minutes before beginning work.

  NOTE: The memory is not erased even if the ignition switch is turned OFF or the battery cables are disconnected from the battery.

- Use replacement parts which are manufactured to the same standards and quality as the original parts. Do not install used SRS parts from another vehicle. Use only new parts when making SRS repairs.

- Carefully inspect any SRS part before you install it. Do not install any part that shows signs of being dropped or improperly handled, such as dents, cracks, or deformation.

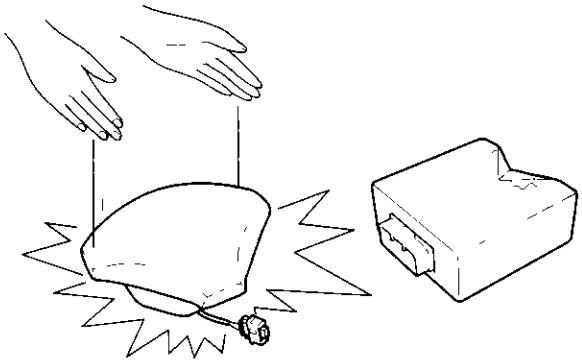

- Before removing any of the SRS parts (including disconnection of the connectors), always disconnect the SRS connector.

- Use only a digital multimeter to check the system. If it is not a Honda multimeter, make sure its output is 10 mA (0.01 A) or less when switched to the lowest value in the ohmmeter range. A tester with a higher output could cause accidental deployment and possible injury.

- Do not put objects on the passenger's airbag.

- The original radio has a coded theft protection circuit. Be sure to get the customer's radio code and write down the frequencies for the radio preset stations before disconnecting the battery cable.

- Before returning the vehicle to the customer, enter the customer's radio code, and radio station preset, and set the clock.

### Steering-related Precautions

#### Cable Reel Alignment

- Misalignment of the cable reel could cause an open in the wiring, making the SRS system and the horn inoperative. Center the cable reel whenever the following is performed (see step 6 on page 23-73).

  - Installation of the steering wheel
  - Installation of the cable reel
  - Installation of the steering column
  - Other steering-related adjustment or installation

- Do not disassemble the cable reel.

- Do not apply grease to the cable reel.

- If the cable reel shows any signs of damage or contamination, replace it with a new one. For example, it does not rotate smoothly.

## Airbag Handling and Storage

Do not disassemble an airbag. It has no serviceable parts. Once an airbag has been deployed, it cannot be repaired or reused.

For temporary storage of an airbag during service, observe the following precautions.

- Store the removed airbag with the pad surface up. Never put anything on the removed airbag.

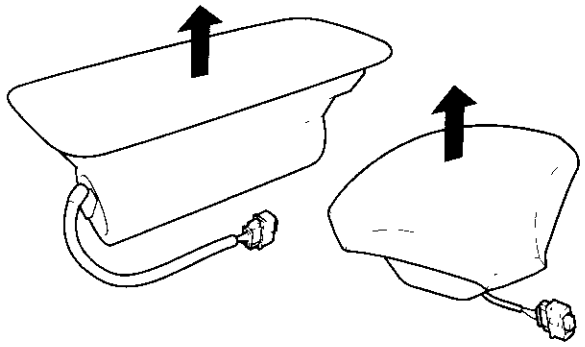

- To prevent damage to the airbag, keep it free from any oil, grease, detergent, or water .

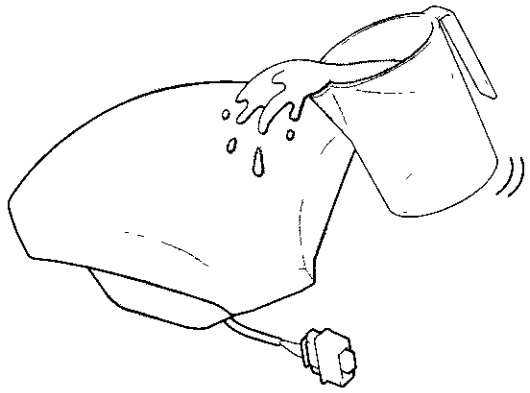

- Store the removed airbag on a secure, flat surface away from any high heat source (exceeding 200°F/ 93°C).

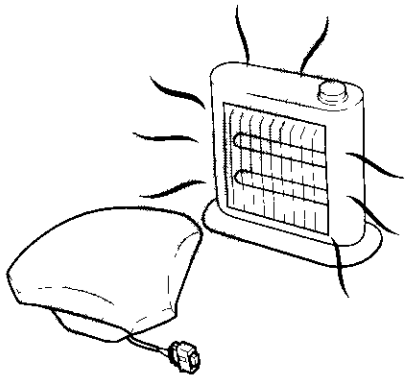

- Never perform electrical inspections to the airbags, such as measuring resistance.
- Do not position yourself in front of the airbag during removal, inspection, or replacement.

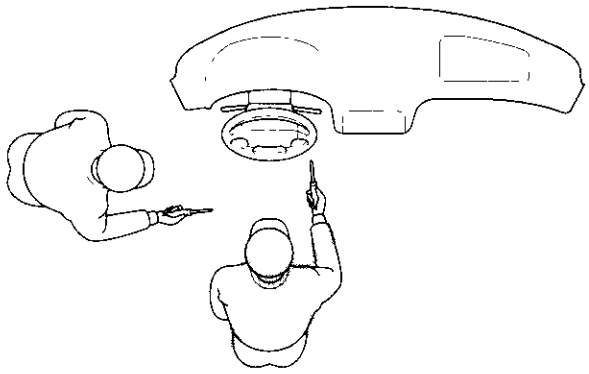

- Refer to the scrapping procedures for disposal of a damaged airbag.

(cont'd)

## Precautions and Procedures (cont'd)

### SRS Unit Precautions

- Be careful not to bump or impact the SRS unit whenever the ignition switch is ON (II), or for at least for 3 minutes after the ignition switch is turned OFF.
- During installation or replacement, be careful not to bump (by impact wrench, hammer, etc.) the area around the SRS unit. The airbags could accidentally deploy and cause damage or injury.

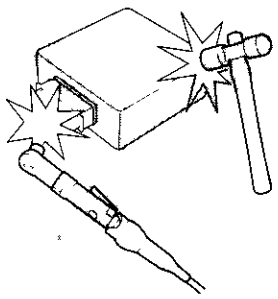

- After a collision in which the airbags were deployed, replace the SRS unit and other related components (see page 23-64). After a collision in which the airbags were not deployed, inspect for any damage or any deformation on the SRS unit. If there is any damage, replace the SRS unit.

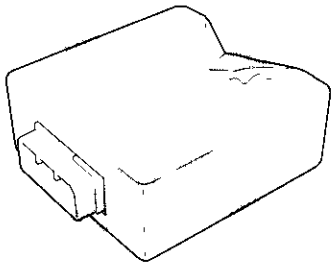

- Do not disassemble the SRS unit.
- Turn the ignition switch OFF, disconnect the battery negative cable, and wait at least 3 minutes before beginning installation or replacement of the SRS unit, or disconnecting the 18P connector from the SRS unit.
- Be sure the SRS unit is installed securely with the mounting bolts torqued to 9.8 N·m (1.0 kgf·m, 7.2 lbf·ft).
- Do not spill water or oil on the SRS unit, and keep it away from dust.
- Store the SRS unit in a cool (less than 104°F/40°C) and dry (less than 80% relative humidity, no moisture) area.

## Wiring Precautions

Some of the SRS wiring can be identified by a special yellow outer covering, and the SRS connectors can be identified by their yellow color.
Observe the instructions described in this section.

- Never attempt to modify, splice, or repair SRS wiring. If there is an open or damage in SRS wiring, replace the harness.

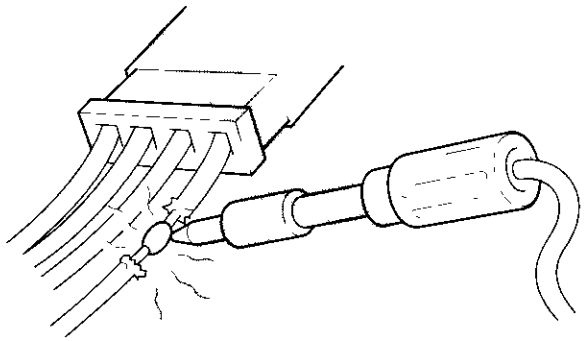

- Be sure to install the harness wires so they do not get pinched, or interfere with other parts.

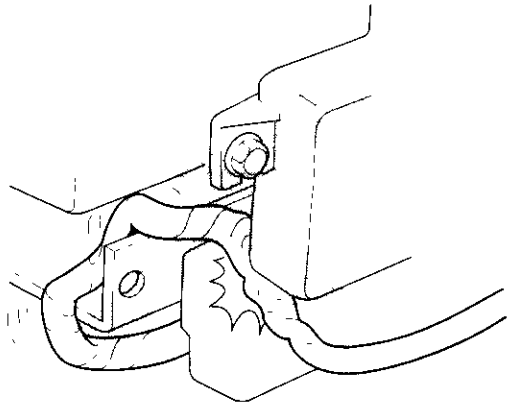

- Make sure all SRS ground locations are clean, and grounds are securely fastened for optimum metal-to-metal contact. Poor grounding can cause intermittent problems that are difficult to diagnose.

## Precautions for Electrical Inspections

- When using electrical test equipment, insert the probe of the tester into the wire side of the connector. Do not insert the probe of the tester into the terminal side of the connector, and do not tamper with the connector.

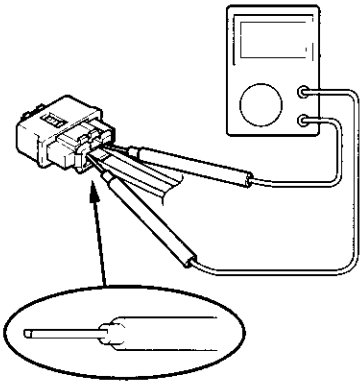

- Use a U-shaped probe. Do not insert the probe forcibly.

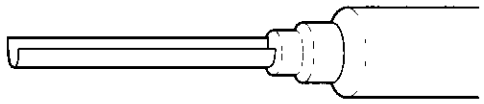

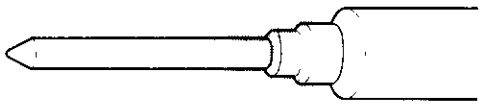

- Use specified service connectors in troubleshooting. Using improper tools could cause an error in inspection due to poor metal-to-metal contact.

(cont'd)

## Precautions and Procedures (cont'd)

### Spring-loaded Lock Connector

Some SRS system connectors have a spring-loaded lock.

**Disconnecting**
To release the lock, pull the spring-loaded sleeve (A) toward the stop (B) while holding the opposite half of the connector. Then pull the connector halves apart. Be sure to pull on the sleeve and not on the connector.

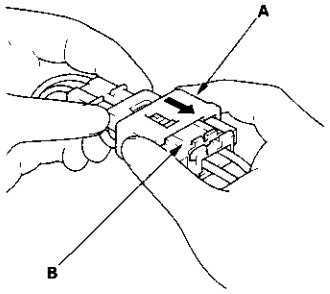


**Connecting**
1. To reconnect, hold the pawl-side connector, and press on the back of the sleeve-side connector in the direction shown. As the two connector halves are pressed together, the sleeve (A) is pushed back by the pawl (C). Do not touch the sleeve.

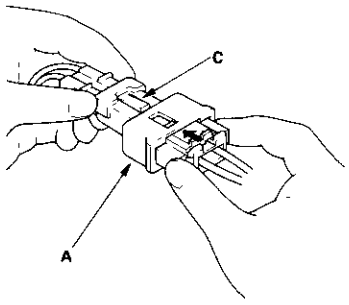


2. When the connector halves are completely connected, the pawl is released, and the spring-loaded sleeve locks the connector.

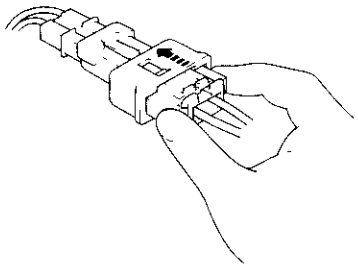

### Backprobing Spring-loaded Lock Connectors

When checking voltage or resistance on this type of connector the first time, you must remove the retainer (A) to insert the tester probe from the wire side.

NOTE: It is not necessary to reinstall the removed retainer; the terminals will stay locked in the connector housing.

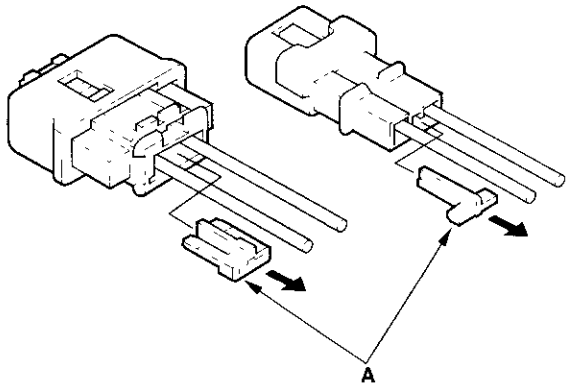


To remove the retainer (A), insert a flat-tip screwdriver (B) between the connector body and the retainer, then carefully pry out the retainer. Take care not to break the connector.

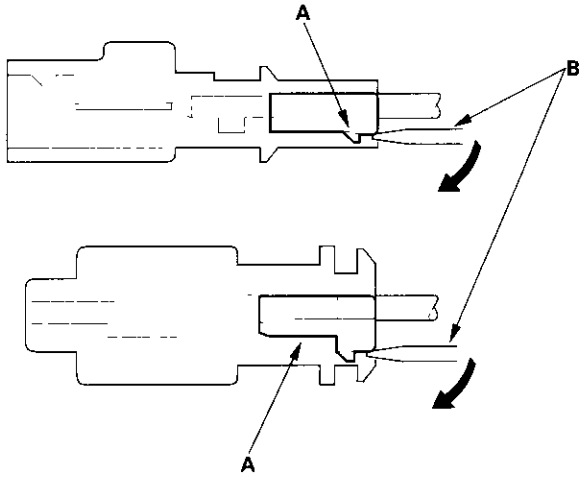

## Disconnecting System Connectors

Before removing the airbag or SRS related devices (the SRS unit, the cable reel, and the seat belt tensioner connectors), disconnecting connectors from related devices, or removing the dashboard or the steering column, disconnect the airbag connectors and seat belt tensioner connectors to prevent accidental deployment.

Turn the ignition switch OFF, disconnect the negative cable from the battery, and wait at least 3 minutes before beginning the following procedures.

- Before disconnecting the SRS unit connector (18P) (A) from the SRS unit, disconnect both airbag 2P connectors (C, D) and both seat belt tensioner 2P connectors (E, F).
- Before disconnecting the cable reel 2P connector (B), disconnect the driver's airbag 2P connector (C).

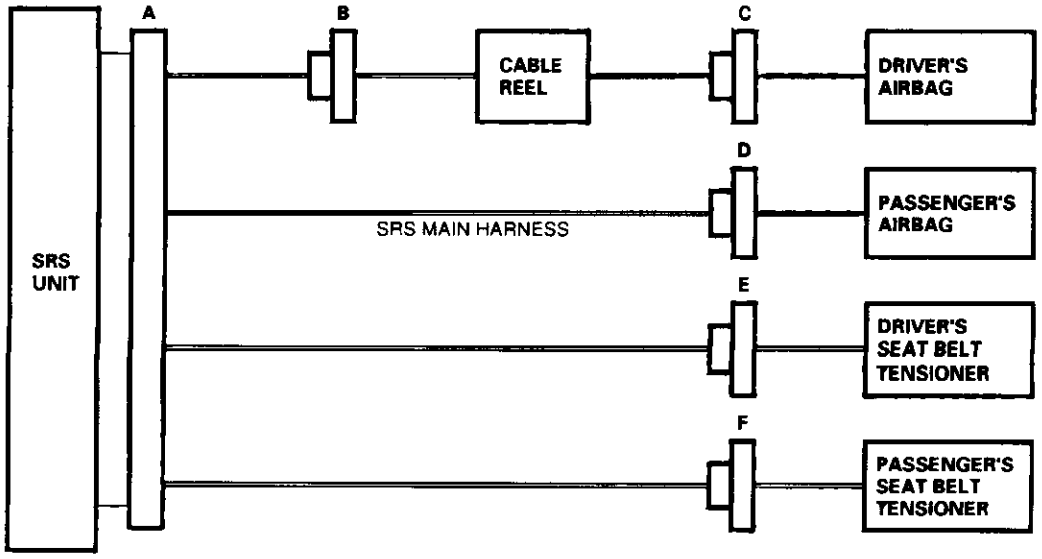


(cont'd)

## Precautions and Procedures (cont'd)

1. Disconnect the battery negative cable, and wait at least 3 minutes.

**Driver's Airbag**

2. Remove the access panel from the steering wheel, then disconnect the driver's airbag 2P connector (A) from the cable reel.

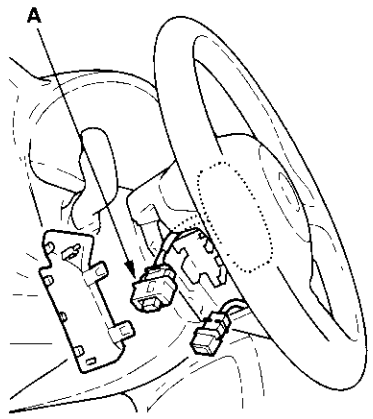


**Passenger's Airbag**

3. Remove the passenger's dashboard lower cover (see page 20-81), then disconnect the passenger's airbag 2P connector (A) from the SRS main harness.

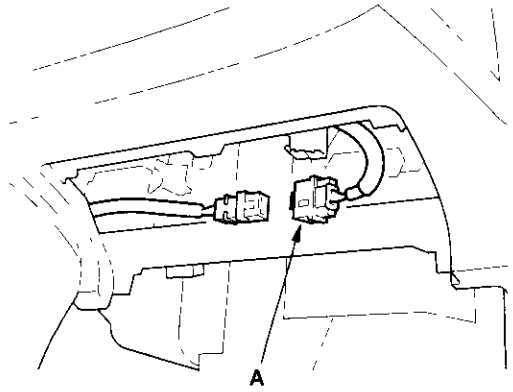


**Seat Belt Tensioner:**

4. Remove the roll bar upper trim (see page 20-71), then disconnect the seat belt tensioner 2P connector (A) from the SRS main harness.

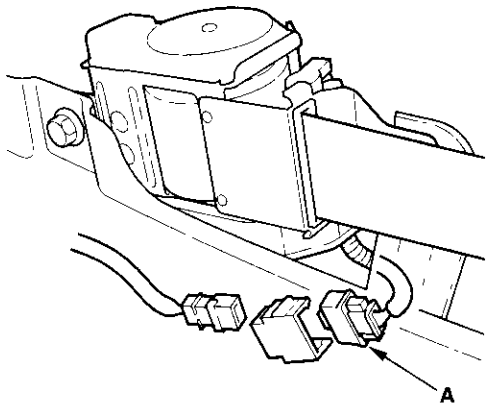

# General Troubleshooting Information

## DTC (Diagnostic Trouble Codes)

The self-diagnostic function of the SRS allows it to locate the causes of system problems and then store this information in memory. For easier troubleshooting, this data can be retrieved via a data link circuit.

- When you turn the ignition switch ON (II), the SRS indicator will come on. If it goes off after 6 seconds, the system is normal.
- If there is an abnormality, the system locates and defines the problem, stores this information in memory, and turns the SRS indicator on. The data will remain in the memory even when the ignition switch is turned off or if the battery is disconnected.
- When you connect the Honda PGM Tester to the 16P data link connector (DLC) to short the SCS terminal, and turn the ignition switch ON (II), the SRS indicator will indicate the diagnostic trouble code (DTC) by the number of blinks.
- When you connect the Honda PGM Tester to the 16P data link connector (DLC), you can retrieve the DTC in the Honda Systems "SRS" menu.
- After reading and recording the DTC, proceed with the troubleshooting procedure for the code indicated.

**Precautions**

- Use only a digital multimeter to check the system. If it is not a Honda multimeter, make sure its output is 10 mA (0.01 A) or less when switched to the smallest value in the ohmmeter range. A tester with a higher output could damage the airbag circuit or cause accidental airbag deployment and possible injury.
- Whenever the ignition switch is ON (II), or has been turned OFF for less than 3 minutes, be careful not to bump the SRS unit; the airbags could accidentally deploy and cause damage or injuries.
- Before you remove the SRS main harness, disconnect the driver's airbag connector, the passenger's airbag connector, and seat belt tensioner connectors.
- Make sure the battery is sufficiently charged. If the battery is dead or low, the measured values will not be correct.
- Do not touch a tester probe to the terminals in the SRS unit or harness connectors, and do not connect the terminals with a jumper wire. Use only the backprobe set and special tools.

## Reading the DTC

When the SRS indicator is on, read the DTC using either of the following methods:

**PGM Tester "SRS" Menu Method**

Connect the Honda PGM Tester (A) to the 16P data link connector (DLC)(B), and follow the Tester's prompts in the "SRS" menu. If the Tester indicates no DTC, DTC 9-1, or DTC 9-2, double-check by using the "SCS" menu method.

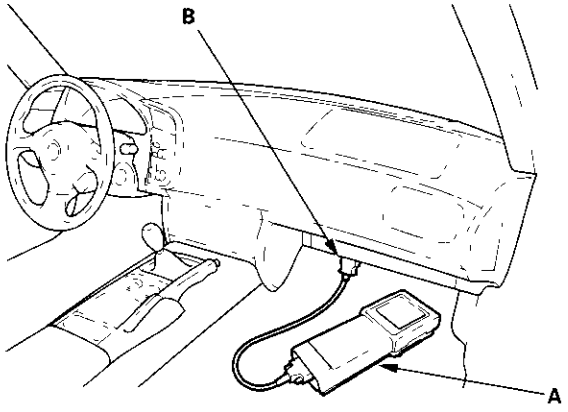


(cont'd)

## General Troubleshooting Information (cont'd)

**PGM Tester "SCS" Menu Method (Retrieving the flash codes)**
The SRS indicator indicates the DTC by the number of blinks when the Honda PGM Tester is connected to the DLC (data link connector) (16P).

1. Make sure the ignition switch is OFF.
2. Connect the Honda PGM Tester (A) to the data link connector (16P)(B), and follow the Tester's prompts in the "SCS" menu to ground the SCS line (see the Honda PGM Tester Operator's Manual).

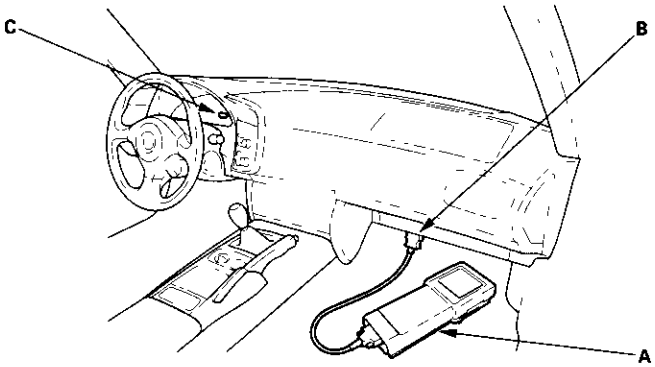


3. Make sure the SCS line is grounded, then turn the ignition switch ON (II). The SRS indicator (C) should come on for about 6 seconds, and then go off. Then it will blink to indicate the DTC (see the table below).
   - Including the most recent problem, up to three different DTCs can be displayed.
   - In case of a continuous failure, the DTC will be indicated repeatedly (see example 1 below).
   - In case of an intermittent failure, the SRS indicator will indicate the DTC one time, then it will stay on (see example 2 below).
   - If a continuous and an intermittent failure occur, both DTCs will be indicated as continuous failures.
   - In case the system is normal (no DTC), the SRS indicator light will stay on (see example 3).

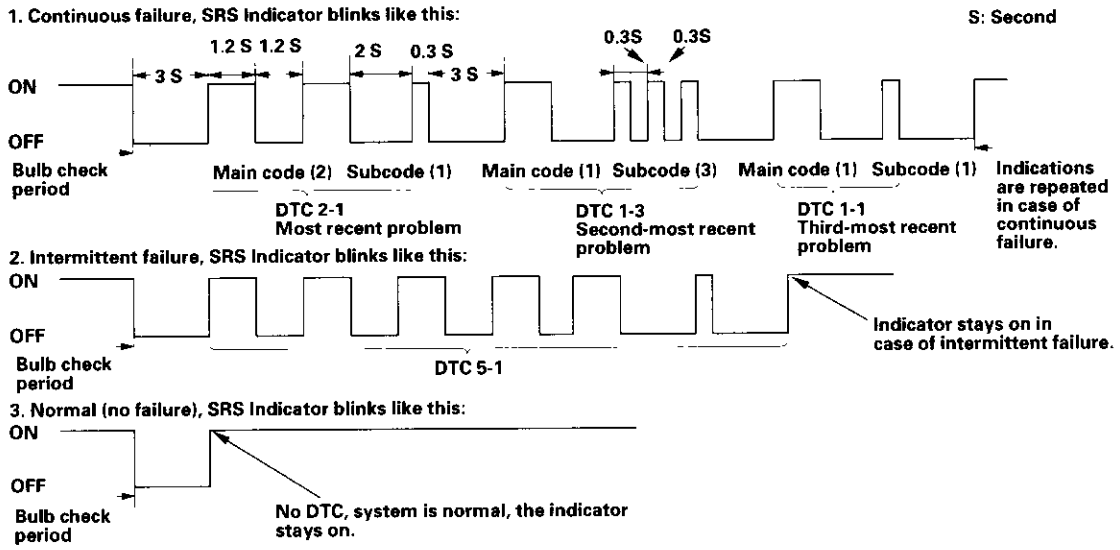


4. Read the DTC.
5. Turn the ignition switch OFF, and wait for 10 seconds.
6. Disconnect the Honda PGM Tester from the DLC (16P).
7. Do the troubleshooting procedure for the DTC.

## Erasing the DTC Memory

**Special Tools Required**
SCS Service Connector 07PAZ-0010100

To erase the DTC(s) from the SRS unit, use a Honda PGM Tester (see the Honda PGM Tester SRS Vehicle System Supplement) or the following procedure.

1. Make sure the ignition switch is OFF.
2. Connect the special tool (A) to the MES 2P connector (B). Do not use a jumper wire.

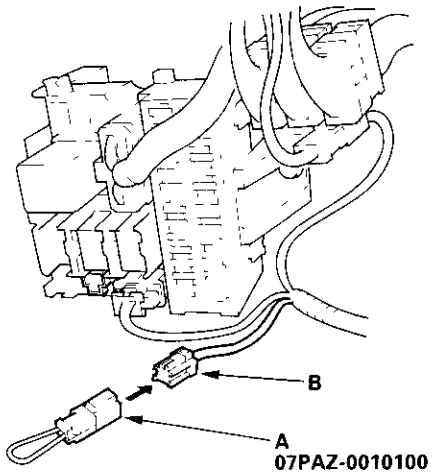


3. Turn the ignition switch ON (II).
4. The SRS indicator will come on for about 6 seconds, and then go off. Remove the SCS service connector from the MES connector within 4 seconds after the indicator goes off.
5. The SRS indicator will come on again. Reconnect the SCS service connector to the MES connector within 4 seconds after the indicator comes on.
6. When the SRS indicator goes off, remove the SCS service connector from the MES connector within 4 seconds.
7. The SRS indicator will blink two times indicating that the memory has been erased.
8. Turn the ignition switch OFF, and wait for 10 seconds.
9. Turn the ignition switch ON (II) again. The SRS is OK if the SRS indicator comes on for about 6 seconds and then goes off.

## Troubleshooting Intermittent Failures

If there was a malfunction, but it doesn't recur, it will be stored in the memory as an intermittent failure, and the SRS indicator will come on.

After checking the DTC, troubleshoot as follows:

1. Read the DTC (see "Reading the DTC").
2. Erase the DTC memory (see "Erasing the DTC Memory").
3. With the shift lever in neutral, start the engine, and let it idle.
4. The SRS indicator will come on for about 6 seconds and then go off.
5. Shake the wire harness and the connectors, take a test drive (quick acceleration, quick braking, cornering), turn the steering wheel fully left and right, and hold it there for 5 to 10 seconds. If the problem recurs, the SRS indicator will come on.
6. If you can't duplicate the intermittent failure, the system is OK at this time.

## DTC Troubleshooting Index

| DTC | Detection Item | Notes |
|---|---|---|
| 1-1 | Open in driver's airbag inflator | (see page 23-24) |
| 1-2 | Increased resistance in driver's airbag inflator | (see page 23-24) |
| 1-3 | Short to another wire or decreased resistance in driver's airbag inflator | (see page 23-26) |
| 1-4 | Short to power in driver's airbag inflator | (see page 23-28) |
| 1-5 | Short to ground in driver's airbag inflator | (see page 23-30) |
| 2-1 | Open in passenger's airbag inflator | (see page 23-32) |
| 2-2 | Increased resistance in passenger's airbag inflator | (see page 23-32) |
| 2-3 | Short to another wire or decreased resistance in passenger's airbag inflator | (see page 23-33) |
| 2-4 | Short to power in passenger's airbag inflator | (see page 23-35) |
| 2-5 | Short to ground in passenger's airbag inflator | (see page 23-36) |
| 3-1 | Open in driver's seat belt tensioner | (see page 23-38) |
| 3-2 | Increased resistance in driver's seat belt tensioner | (see page 23-38) |
| 3-3 | Short to another wire or decreased resistance in driver's seat belt tensioner | (see page 23-40) |
| 3-4 | Short to power in driver's seat belt tensioner | (see page 23-42) |
| 3-5 | Short to ground in driver's seat belt tensioner | (see page 23-44) |
| 4-1 | Open in passenger's seat belt tensioner | (see page 23-46) |
| 4-2 | Increased resistance in passenger's seat belt tensioner | (see page 23-46) |
| 4-3 | Short to another wire or decreased resistance in passenger's seat belt tensioner | (see page 23-48) |
| 4-4 | Short to power in passenger's seat belt tensioner | (see page 23-50) |
| 4-5 | Short to ground in passenger's seat belt tensioner | (see page 23-52) |
| 5-1 | Internal failure of SRS unit<br>NOTE:<br>Before troubleshooting DTCs 5-1 through 8-6, check battery/system voltage. If voltage is low, repair the charging system before troubleshooting the SRS. | (see page 23-54) |
| 5-2 | | |
| 5-3 | | |
| 5-4 | | |
| 6-1 | | |
| 6-2 | | |
| 6-3 | | |
| 6-4 | | |
| 7-1 | | |
| 7-2 | | |
| 7-3 | | |
| 8-1 | | |
| 8-2 | | |
| 8-3 | | |
| 8-4 | | |
| 8-6 | | |
| 9-1 | Internal failure of the SRS unit. If intermittent, it could mean internal failure of the unit or a faulty indicator light circuit. Refer to Troubleshooting Intermittent Failures (see page 23-19).<br>NOTE: Before troubleshooting DTC 9-1, check battery/system voltage. If the voltage is low, repair the charging system before troubleshooting the SRS. | (see page 23-54) |
| 9-2 | Internal failure of the SRS unit. If intermittent, it could mean internal failure of the power supply (VB line). Refer to Troubleshooting Intermittent Failures (see page 23-19).<br>NOTE: Before troubleshooting DTC 9-2, check battery/system voltage. If the voltage is low, repair the charging system before troubleshooting the SRS. | |
| 10-1 | Seat belt tensioners (and airbag(s)) deployed. | (see page 23-54) |

## Symptom Troubleshooting Index

| Symptom | Diagnostic procedure | Also check for |
|---|---|---|
| SRS indicator doesn't come on | SRS Indicator Troubleshooting (see step 1 on page 23-55) | |
| SRS indicator stays on when in "SCS" menu method | SRS Indicator Troubleshooting (see step 1 on page 23-57) | Inability to retrieve DTCs with the PGM Tester. Retrieve the flash codes using the SCS menu method (see page 23-18). |

# System Description

## SRS Components

### Airbags

The SRS is a safety device which, when used with the seat belt, is designed to help protect the driver and passenger in a frontal impact exceeding a certain set limit. The system consists of the SRS unit, including a safing sensor and an impact sensor (A), the cable reel (B), the driver's airbag (C) and the passenger's airbag (D).

### Seat Belt Tensioners

The seat belt tensioner (E) is linked with the SRS airbags to further increase the effectiveness of the seat belt. In a front-end collision, the tensioner instantly retracts the belt firmly to secure the occupants in their seats.

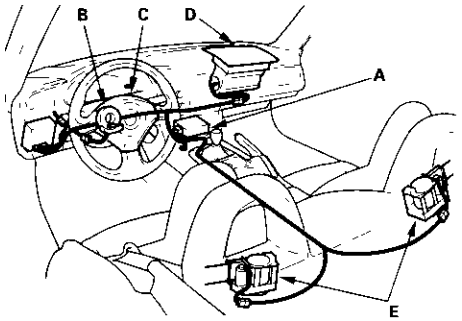


## SRS Operation

The main circuit in the SRS unit senses and judges the force of impact and, if necessary, ignites the inflator charges. If battery voltage is too low or power is disconnected due to impact, the voltage regulator and the back-up power circuit respectively will keep voltage at a constant level.

**For the SRS to operate:**

(1) The impact sensor must activate and send electronic signals to the microprocessor.
(2) The microprocessor must compute the signals and send them to the airbag inflators (and seat belt tensioners).
(3) The inflators must ignite and deploy the airbags (and activate the tensioners).

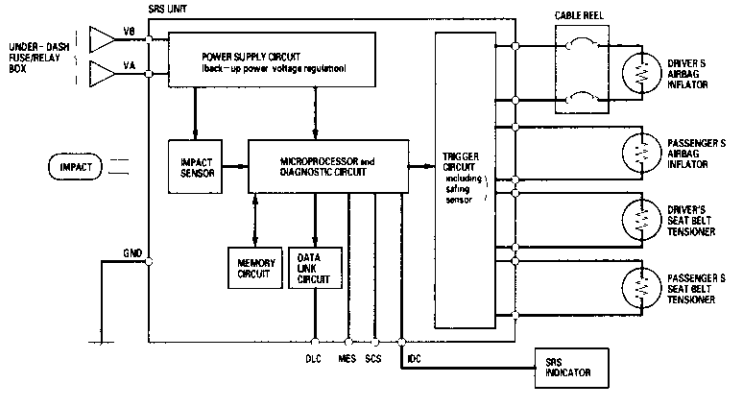


### Self-diagnosis System

A self-diagnosis circuit is built into the SRS unit; when the ignition switch is turned ON (II), the SRS indicator comes on and goes off after about 6 seconds if the SRS is operating normally.
If the indicator does not come on, or does not go off after 6 seconds, or if it comes on while driving, it indicates an abnormality in the SRS. The SRS must be inspected and repaired as soon as possible.
For better serviceability, the SRS unit memory stores a DTC that relates to the cause of the malfunction, and the unit is connected to the data link connector (DLC). This information can be read with the Honda PGM Tester when it is connected to the DLC (16P) (see page 23-17).

## Circuit Diagram

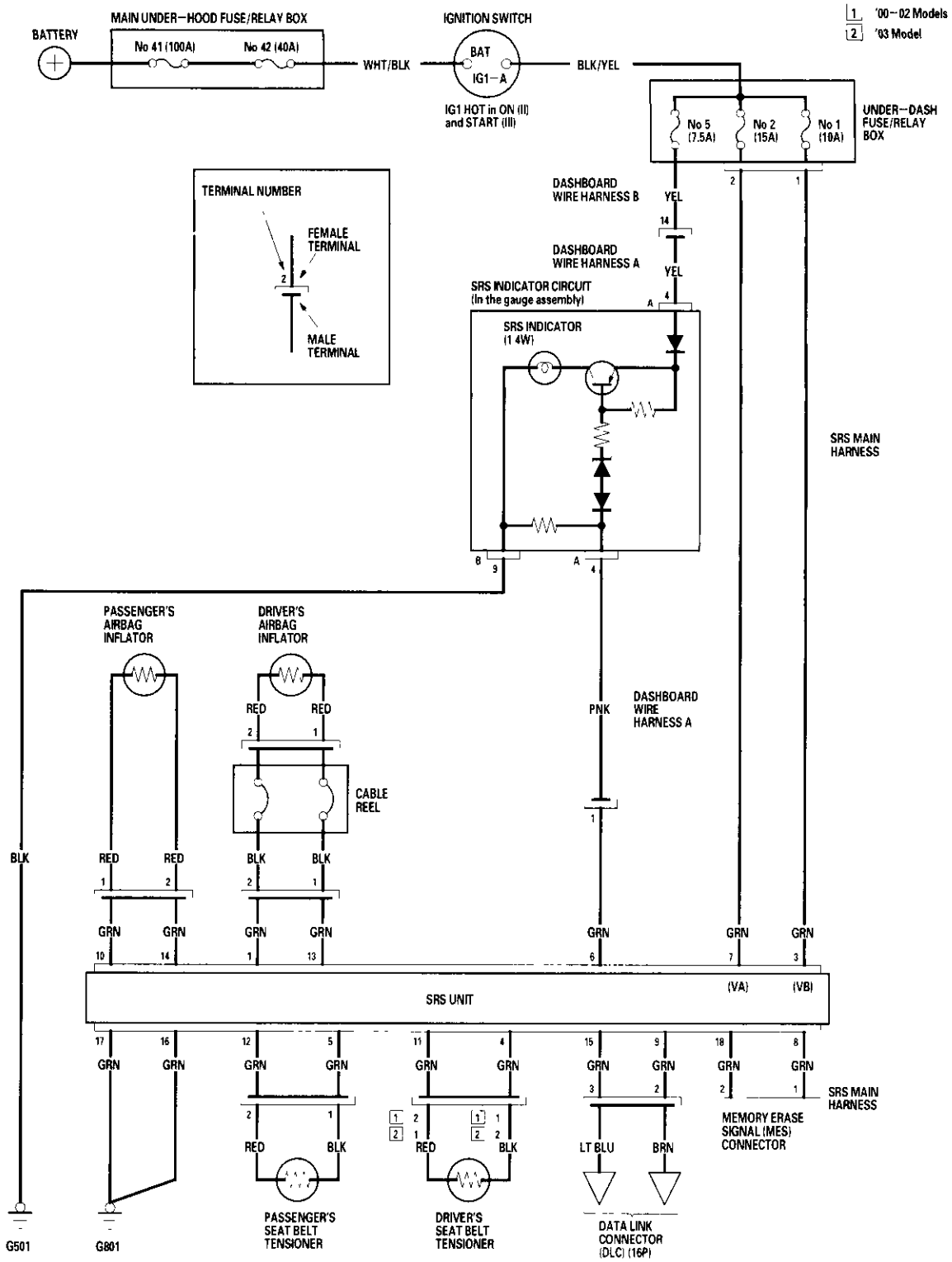

## DTC Troubleshooting

### DTC 1-1: Open in Driver's Airbag Inflator

### DTC 1-2: Increased Resistance in Driver's Airbag Inflator

**Special Tools Required**
- SRS inflator simulator 07SAZ-TB4011A
- SRS simulator lead C 07TAZ-SZ5011A

1. Erase the DTC memory (see page 23-19).
2. Turn the ignition switch ON (II), and check that the SRS indicator comes on for about 6 seconds and then goes off.

   *Does the SRS indicator stay on?*

   **YES** – Go to step 3.

   **NO** – Intermittent failure, system is OK at this time. Go to Troubleshooting Intermittent Failures (see page 23-19).
3. Turn the ignition switch OFF, then disconnect the battery negative cable, and wait for 3 minutes.
4. Disconnect the driver's airbag 2P connector from the cable reel (A).

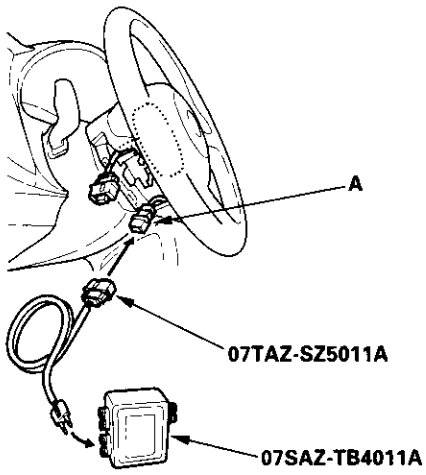


5. Connect the SRS inflator simulator (2 Ω connector) and the simulator lead to the cable reel.
6. Reconnect the battery negative cable.
7. Erase the DTC memory.
8. Read the DTC.

   *Is DTC 1-1 or DTC 1-2 indicated?*

   **YES** – Go to step 9.

   **NO** – Open or increased resistance in the driver's airbag; replace the driver's airbag (see page 23-65). ■
9. Turn the ignition switch OFF, then disconnect the battery negative cable, and wait for 3 minutes.
10. Disconnect the cable reel 2P connector from the SRS main harness (A).

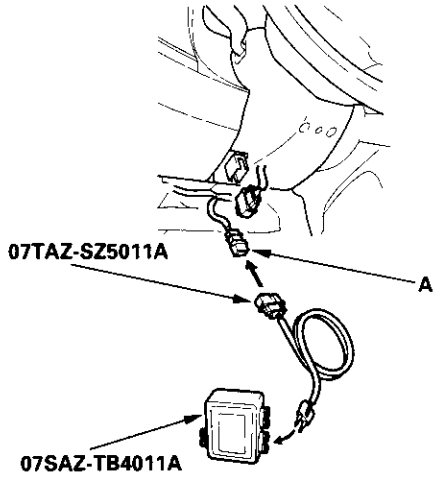


11. Connect the SRS inflator simulator (2 Ω connector) and the simulator lead to the SRS main harness.
12. Reconnect the battery negative cable.
13. Erase the DTC memory.

14. Read the DTC.

*Is DTC 1-1 or DTC 1-2 indicated?*

**YES** – Go to step 15.

**NO** – Open or increased resistance in the cable reel; replace the cable reel (see page 23-72). ■

15. Turn the ignition switch OFF, then disconnect the battery negative cable, and wait for 3 minutes.

16. Disconnect the passenger's airbag 2P connector (A) and both seat belt tensioner 2P connectors (B).

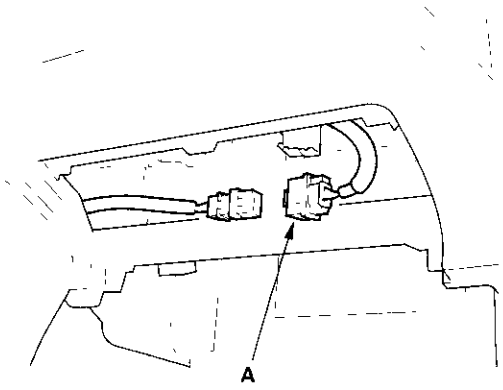


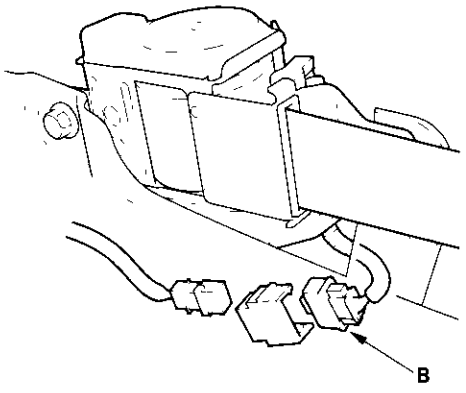


17. Disconnect the SRS unit 18P connector (A) from the SRS unit. Do not disconnect the special tool from the SRS main harness.

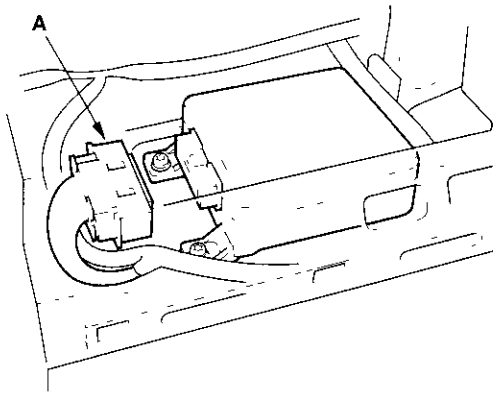


18. Check resistance between the No. 1 and No. 13 terminals of the SRS unit 18P connector. There should be 2.0 3.0 Ω.

**SRS UNIT 18P CONNECTOR**

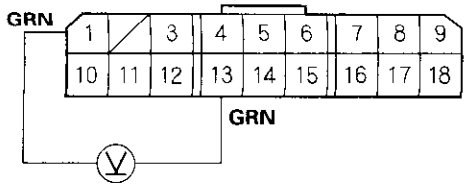


Wire side of female terminals

*Is the resistance as specified?*

**YES** – Faulty SRS unit or poor contact at the SRS unit 18P connector and the SRS unit. Check the connection between the connector and the SRS unit. If the connection is OK, replace the SRS unit (see page 23-75). ■

**NO** – Open or increased resistance in the SRS main harness; replace the SRS main harness. ■

## DTC Troubleshooting (cont'd)

### DTC 1-3: Short to Another Wire or Decreased Resistance in Driver's Airbag Inflator

**Special Tools Required**
- SRS inflator simulator 07SAZ-TB4011A
- SRS simulator lead C 07TAZ-SZ5011A

1. Erase the DTC memory (see page 23-19).
2. Turn the ignition switch ON (II), and check that the SRS indicator comes on for about 6 seconds and then goes off.

   *Does the SRS indicator stay on?*

   **YES** – Go to step 3.

   **NO** – Intermittent failure, system is OK at this time. Go to Troubleshooting Intermittent Failures (see page 23-19).
3. Turn the ignition switch OFF, then disconnect the battery negative cable, and wait for 3 minutes.
4. Disconnect the driver's airbag 2P connector from the cable reel (A).

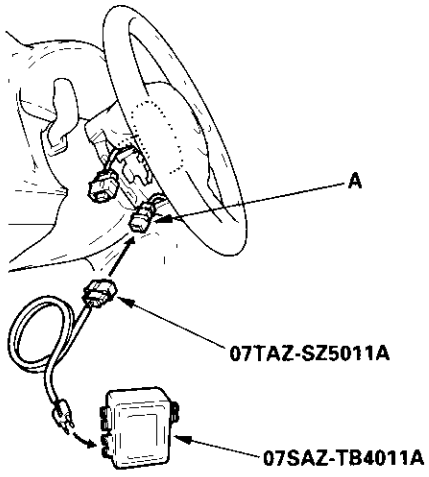


5. Connect the SRS inflator simulator (2 Ω connector) and the simulator lead to the cable reel.
6. Reconnect the battery negative cable.
7. Erase the DTC memory.
8. Read the DTC.

   *Is DTC 1-3 indicated?*

   **YES** – Go to step 9.

   **NO** – Short in the driver's airbag; replace the driver's airbag (see page 23-65). ■
9. Turn the ignition switch OFF, then disconnect the battery negative cable, and wait for 3 minutes.
10. Disconnect the cable reel 2P connector from the SRS main harness (A).

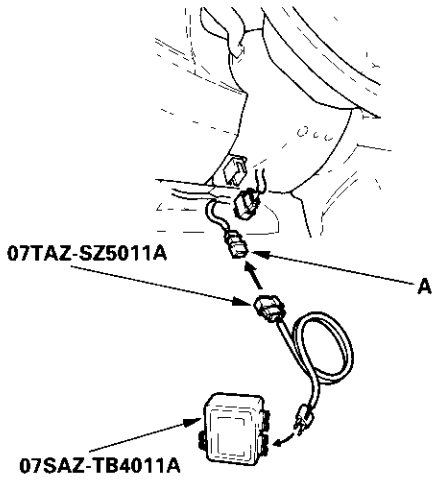


11. Connect the SRS inflator simulator (2 Ω connector) and the simulator lead to the SRS main harness.
12. Reconnect the battery negative cable.
13. Erase the DTC memory.
14. Read the DTC.

    *Is DTC 1-3 indicated?*

    **YES** – Go to step 15.

    **NO** – Short in the cable reel; replace the cable reel (see page 23-72). ■

15. Turn the ignition switch OFF, then disconnect the battery negative cable, and wait for 3 minutes.

16. Disconnect the passenger's airbag 2P connector (A) and both seat belt tensioner 2P connectors (B).

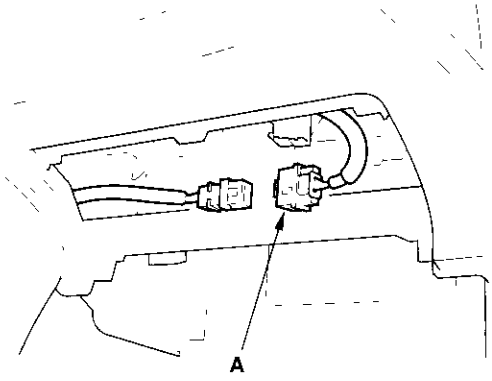


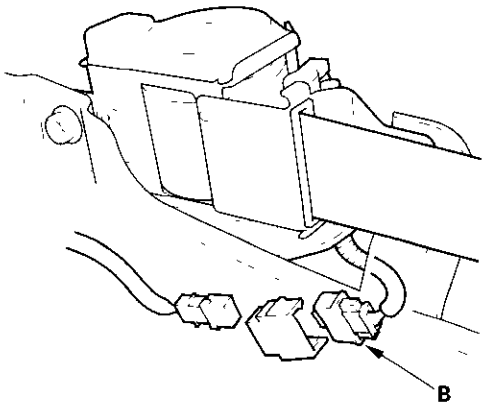


17. Disconnect the special tool from the SRS main harness.

18. Disconnect the SRS unit 18P connector (A) from the SRS unit.

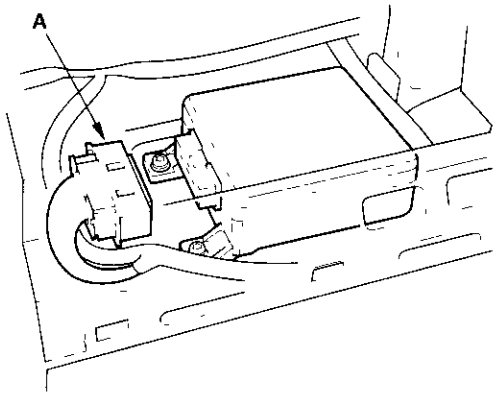


19. Check resistance between the No. 1 and No. 13 terminals of the SRS unit 18P connector. There should be an open circuit, or at least 1 MΩ.

**SRS UNIT 18P CONNECTOR**

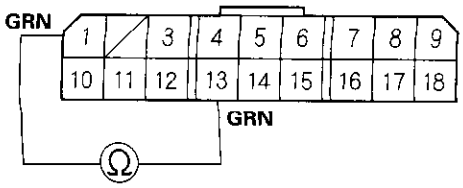


Wire side of female terminals

*Is the resistance as specified?*

**YES**—Faulty SRS unit; replace the SRS unit (see page 23-75).■

**NO**—Short in the SRS main harness; replace the SRS main harness.■

## DTC Troubleshooting (cont'd)

### DTC 1-4: Short to Power in Driver's Airbag Inflator

**Special Tools Required**
- SRS inflator simulator 07SAZ-TB4011A
- SRS simulator lead C 07TAZ-SZ5011A

1. Erase the DTC memory (see page 23-19).
2. Turn the ignition switch ON (II), and check that the SRS indicator comes on for about 6 seconds and then goes off.

   *Does the SRS indicator stay on?*

   **YES** – Go to step 3.

   **NO** – Intermittent failure, system is OK at this time. Go to Troubleshooting Intermittent Failures (see page 23-19).
3. Turn the ignition switch OFF, then disconnect the battery negative cable, and wait for 3 minutes.
4. Disconnect the driver's airbag 2P connector from the cable reel (A).

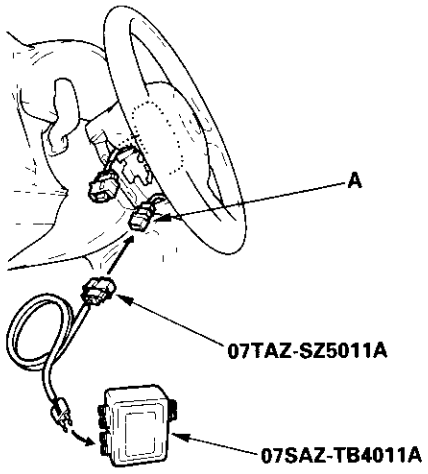


5. Connect the SRS inflator simulator (2 Ω connector) and the simulator lead to the cable reel.
6. Reconnect the battery negative cable.
7. Erase the DTC memory.
8. Read the DTC.

   *Is DTC 1-4 indicated?*

   **YES** – Go to step 9.

   **NO** – Short to power in the driver's airbag; replace the driver's airbag (see page 23-65). ■
9. Turn the ignition switch OFF, then disconnect the battery negative cable, and wait for 3 minutes.
10. Disconnect the cable reel 2P connector from the SRS main harness (A).

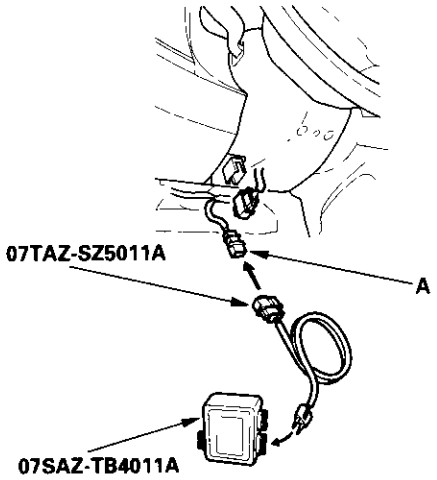


11. Connect the SRS inflator simulator (2 Ω connector) and the simulator lead to the SRS main harness.
12. Reconnect the battery negative cable.
13. Erase the DTC memory.
14. Read the DTC.

    *Is DTC 1-4 indicated?*

    **YES** – Go to step 15.

    **NO** – Short to power in the cable reel; replace the cable reel (see page 23-72). ■

15. Turn the ignition switch OFF, then disconnect the battery negative cable, and wait for 3 minutes.

16. Disconnect the passenger's airbag 2P connector (A) and both seat belt tensioner 2P connectors (B).

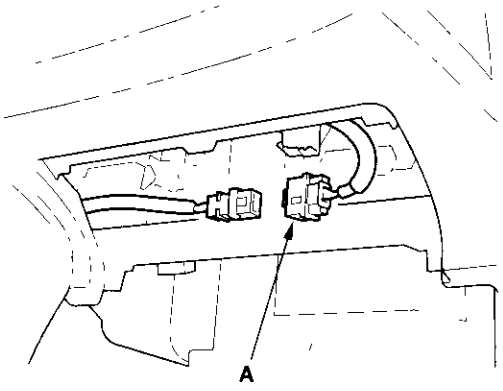


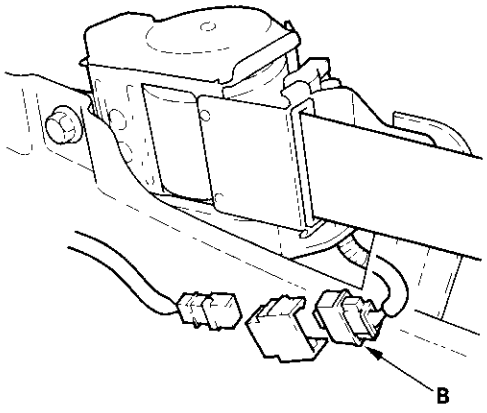


17. Disconnect the SRS unit 18P connector (A) from the SRS unit.

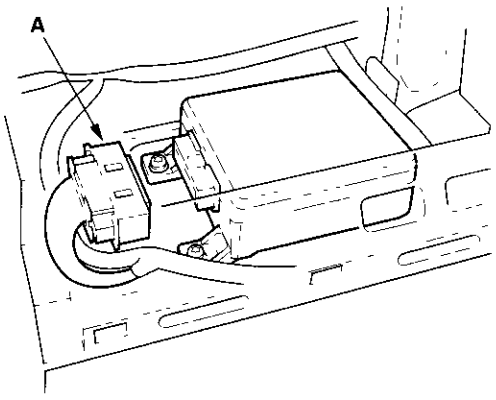


18. Disconnect the special tool from the SRS main harness.

19. Reconnect the battery negative cable.

20. Turn the ignition switch ON (II).

21. Check for voltage between the No. 1 terminal of the SRS unit 18P connector and body ground, and between the No. 13 terminal and body ground. There should be 0.5 V or less.

**SRS UNIT 18P CONNECTOR**

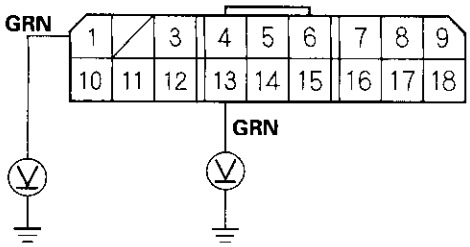


Wire side of female terminals

*Is the voltage as specified?*

**YES** – Faulty SRS unit; replace the SRS unit (see page 23-75). ■

**NO** – Short to power in the SRS main harness; replace the SRS main harness. ■

## DTC Troubleshooting (cont'd)

### DTC 1-5: Short to Ground in Driver's Airbag Inflator

**Special Tools Required**
- SRS inflator simulator 07SAZ-TB4011A
- SRS simulator lead C 07TAZ-SZ5011A

1. Erase the DTC memory (see page 23-19).
2. Turn the ignition switch ON (II), and check that the SRS indicator comes on for about 6 seconds and then goes off.

   *Does the SRS indicator stay on?*

   **YES** – Go to step 3.

   **NO** – Intermittent failure, system is OK at this time. Go to Troubleshooting Intermittent Failures (see page 23-19).
3. Turn the ignition switch OFF, then disconnect the battery negative cable, and wait for 3 minutes.
4. Disconnect the driver's airbag 2P connector from the cable reel (A).

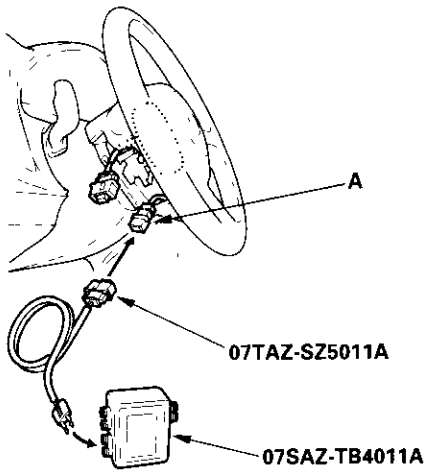


5. Connect the SRS inflator simulator (2 Ω connector) and the simulator lead to the cable reel.
6. Reconnect the battery negative cable.
7. Erase the DTC memory.
8. Read the DTC.

   *Is DTC 1-5 indicated?*

   **YES** – Go to step 9.

   **NO** – Short to ground in the driver's airbag; replace the driver's airbag (see page 23-65). ■
9. Turn the ignition switch OFF, then disconnect the battery negative cable, and wait for 3 minutes.
10. Disconnect the cable reel 2P connector from the SRS main harness (A).

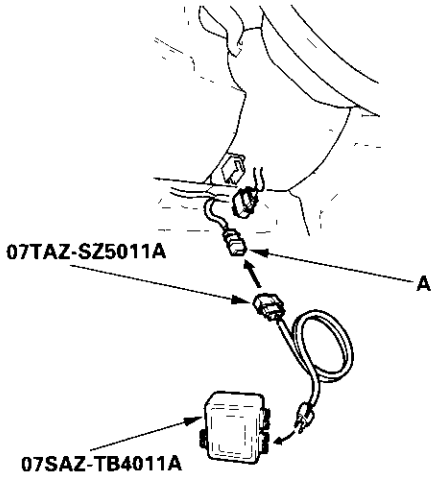


11. Connect the SRS inflator simulator (2 Ω connector) and the simulator lead to the SRS main harness.
12. Reconnect the battery negative cable.
13. Erase the DTC memory.

14. Read the DTC.

*Is DTC 1-5 indicated?*

**YES** – Go to step 15.

**NO** – Short to ground in the cable reel; replace the cable reel (see page 23-72). ■

15. Turn the ignition switch OFF, then disconnect the battery negative cable, and wait for 3 minutes.

16. Disconnect the passenger's airbag 2P connector (A) and both seat belt tensioner 2P connectors (B).

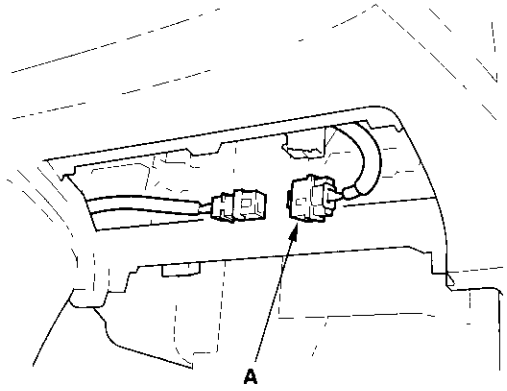


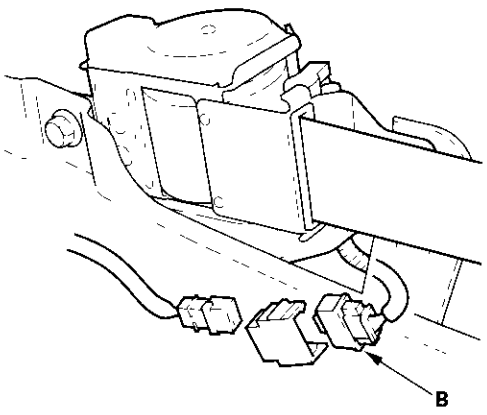


17. Disconnect the SRS unit 18P connector (A) from the SRS unit.

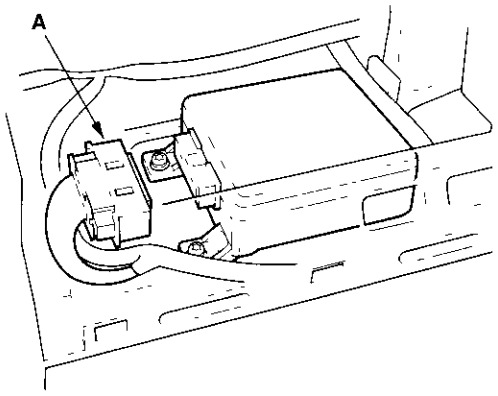


18. Disconnect the special tool from the SRS main harness.

19. Check resistance between the No. 1 terminal of the SRS unit 18P connector and body ground, and between the No. 13 terminal and body ground. There should be an open circuit, or at least 1 MΩ.

**SRS UNIT 18P CONNECTOR**

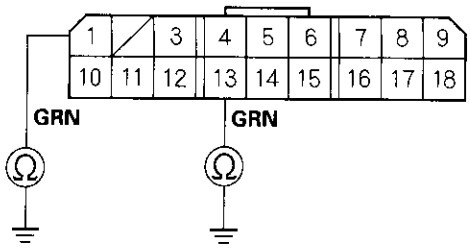


Wire side of female terminals

*Is the resistance as specified?*

**YES** – Faulty SRS unit; replace the SRS unit (see page 23-75). ■

**NO** – Short to ground in the SRS main harness; replace the SRS main harness. ■

## DTC Troubleshooting (cont'd)

### DTC 2-1: Open in Passenger's Airbag Inflator

### DTC 2-2: Increased Resistance in Passenger's Airbag Inflator

**Special Tools Required**
- SRS inflator simulator 07SAZ-TB4011A
- SRS simulator lead C 07TAZ-SZ5011A

1. Erase the DTC memory (see page 23-19).
2. Turn the ignition switch ON (II), and check that the SRS indicator light comes on for about 6 seconds and then goes off.

   *Does the SRS indicator light stay on?*

   **YES** – Go to step 3.

   **NO** – Intermittent failure, system is OK at this time. Go to Troubleshooting Intermittent Failures (see page 23-19).
3. Turn the ignition switch OFF, then disconnect the battery negative cable, and wait for 3 minutes.
4. Disconnect the passenger's airbag 2P connector from the SRS main harness (A).

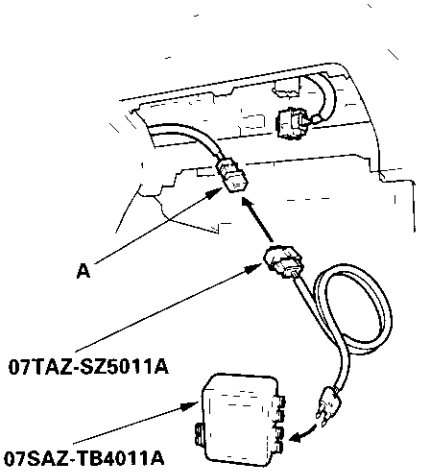


5. Connect the SRS inflator simulator (2 Ω connector) and the simulator lead to the SRS main harness.
6. Reconnect the battery negative cable.
7. Erase the DTC memory.
8. Read the DTC.

   *Is DTC 2-1 or 2-2 indicated?*

   **YES** – Go to step 9.

   **NO** – Open or increased resistance in the passenger's airbag; replace the passenger's airbag (see page 23-67). ■
9. Turn the ignition switch OFF, then disconnect the battery negative cable, and wait for 3 minutes.
10. Disconnect the driver's airbag 2P connector (A) and both seat belt tensioner 2P connectors (B).

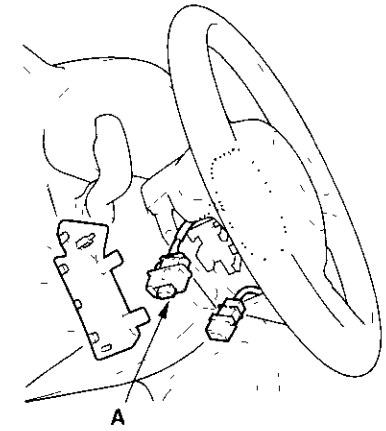


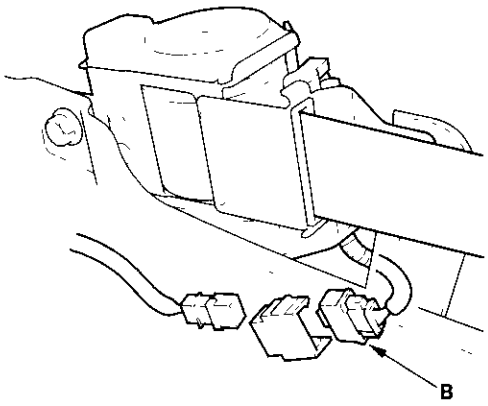

11. Disconnect the SRS unit 18P connector (A) from the SRS unit. Do not disconnect the special tool from the SRS main harness.

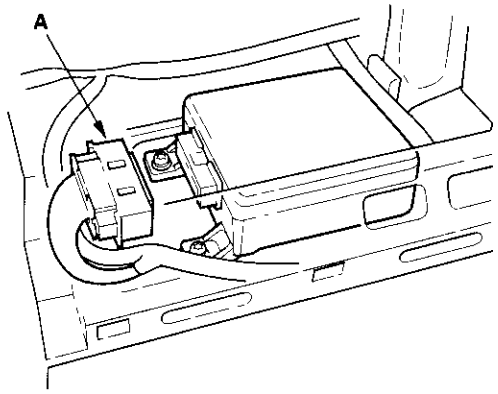


12. Check resistance between the No. 10 and No. 14 terminals of the SRS unit 18P connector. There should be 2.0—3.0 Ω.

**SRS UNIT 18P CONNECTOR**

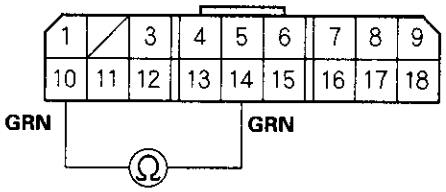


Wire side of female terminals

*Is the resistance as specified?*

**YES**—Faulty SRS unit or poor contact at the SRS unit connector. Check the connection; if the connection is OK, replace the SRS unit (see page 23-75).■

**NO**—Open or increased resistance in the SRS main harness; replace the SRS main harness.■

## DTC 2-3: Short to Another Wire or Decreased Resistance in Passenger's Airbag Inflator

**Special Tools Required**
- SRS inflator simulator 07SAZ-TB4011A
- SRS simulator lead C 07TAZ-SZ5011A

1. Erase the DTC memory (see page 23-19).

2. Turn the ignition switch ON (II), and check that the SRS indicator comes on for about 6 seconds and then goes off.

   *Does the SRS indicator stay on?*

   **YES**—Go to step 3.

   **NO**—Intermittent failure, system is OK at this time. Go to Troubleshooting Intermittent Failures (see page 23-19).

3. Turn the ignition switch OFF, then disconnect the battery negative cable, and wait for 3 minutes.

4. Disconnect the passenger's airbag 2P connector from the SRS main harness (A).

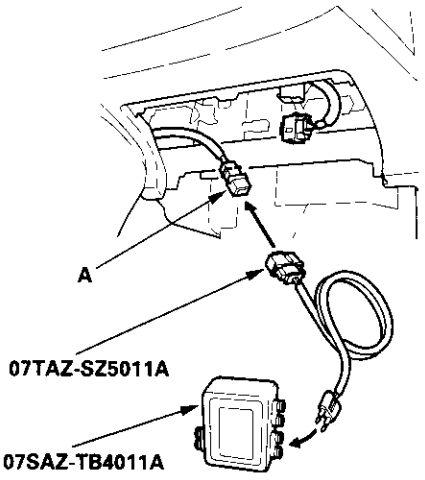


5. Connect the SRS inflator simulator (2 Ω connector) and the simulator lead to the SRS main harness.

(cont'd)

## DTC Troubleshooting (cont'd)

6. Reconnect the battery negative cable.
7. Erase the DTC memory.
8. Read the DTC.

   *Is DTC 2-3 indicated?*

   **YES**—Go to step 9.

   **NO**—Short in the passenger's airbag; replace the passenger's airbag (see page 23-67).■

9. Turn the ignition switch OFF, then disconnect the battery negative cable, and wait for 3 minutes.
10. Disconnect the driver's airbag 2P connector (A) and both seat belt tensioner 2P connectors (B).

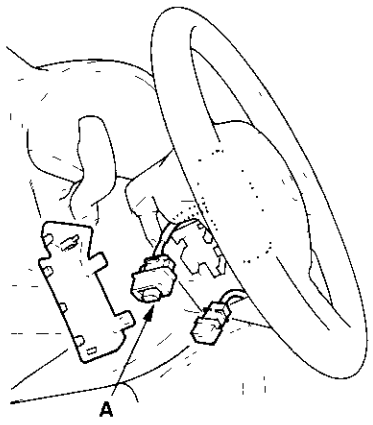


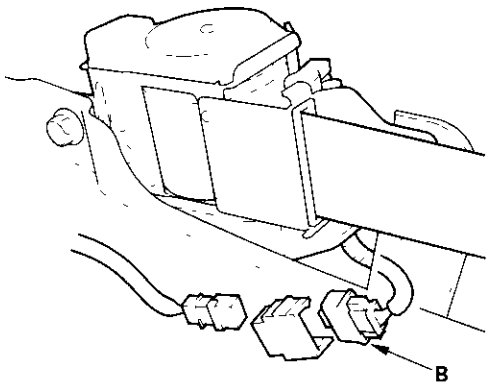


11. Disconnect the special tool from the SRS main harness.
12. Disconnect the SRS unit 18P connector (A) from the SRS unit.

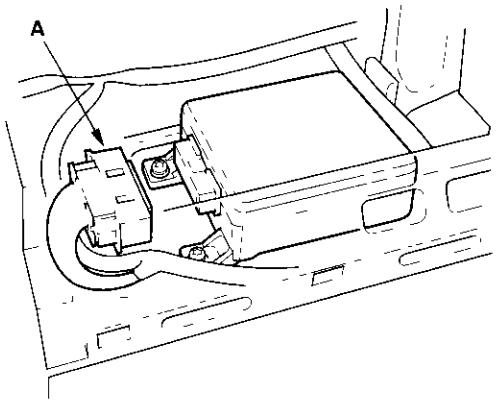


13. Check resistance between the No. 10 and No. 14 terminals of the SRS unit 18P connector.There should be an open circuit, or at least 1 MΩ.

**SRS UNIT 18P CONNECTOR**

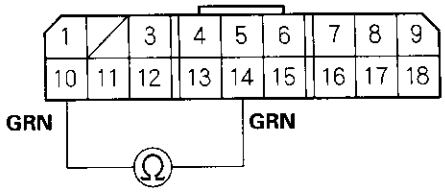


Wire side of female terminals

*Is the resistance as specified?*

**YES**—Faulty SRS unit; replace the SRS unit (see page 23-75).■

**NO**—Short in the SRS main harness; replace the SRS main harness.■

## **DTC 2-4:** Short to Power in Passenger's Airbag Inflator

**Special Tools Required**
- SRS inflator simulator 07SAZ-TB4011A
- SRS simulator lead C 07TAZ-SZ5011A

1. Erase the DTC memory (see page 23-19).
2. Turn the ignition switch ON (II), and check that the SRS indicator comes on for about 6 seconds and then goes off.

   *Does the SRS indicator stay on?*

   **YES** – Go to step 3.

   **NO** – Intermittent failure, system is OK at this time. Go to Troubleshooting Intermittent Failures (see page 23-19).
3. Turn the ignition switch OFF, then disconnect the battery negative cable, and wait for 3 minutes.
4. Disconnect the passenger's airbag 2P connector from the SRS main harness (A).

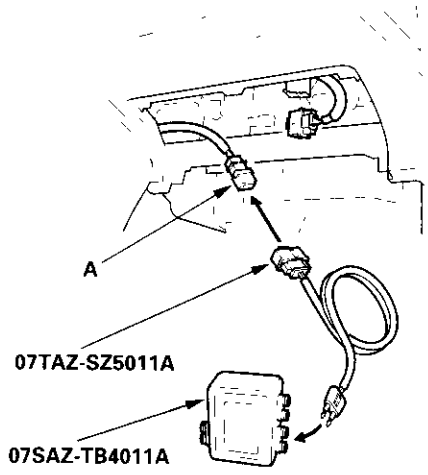


5. Connect the SRS inflator simulator (2 Ω connector) and the simulator lead to the SRS main harness.
6. Reconnect the battery negative cable.
7. Erase the DTC memory.
8. Read the DTC.

   *Is DTC 2-4 indicated?*

   **YES** – Go to step 9.

   **NO** – Short to power in the passenger's airbag; replace the passenger's airbag (see page 23-67). ■
9. Turn the ignition switch OFF, then disconnect the battery negative cable, and wait for 3 minutes.
10. Disconnect the driver's airbag 2P connector (A) and both seat belt tensioner (B).

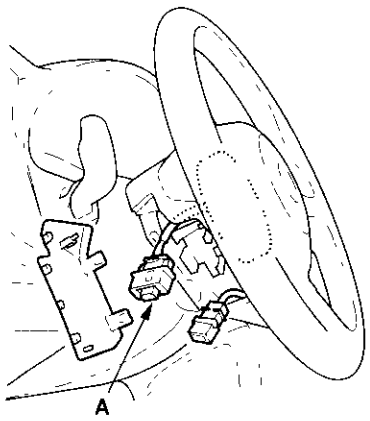


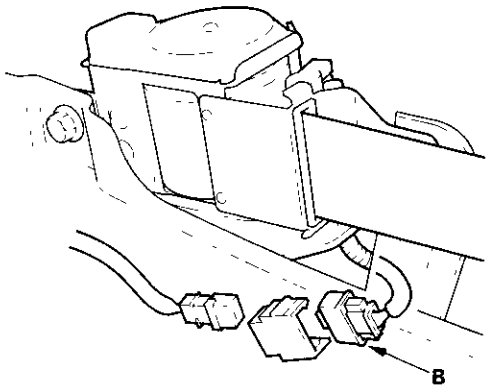


(cont'd)

## DTC Troubleshooting (cont'd)

11. Disconnect the SRS unit 18P connector (A) from the SRS unit.

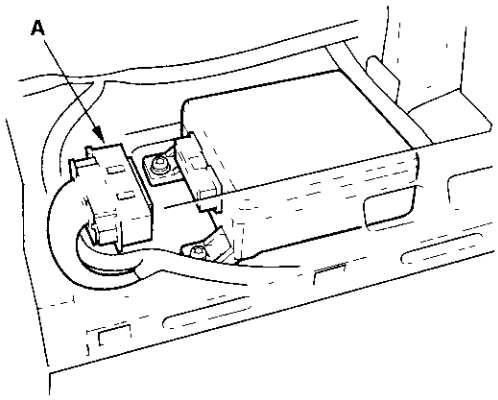


12. Disconnect the special tool from the SRS main haress.

13. Reconnect the battery negative cable.

14. Turn the ignition switch ON (II).

15. Check for voltage between the No. 10 terminal of the SRS unit 18P connector and body ground, and between the No. 14 terminal and body ground. There should be 0.5 V or less.

**SRS UNIT 18P CONNECTOR**

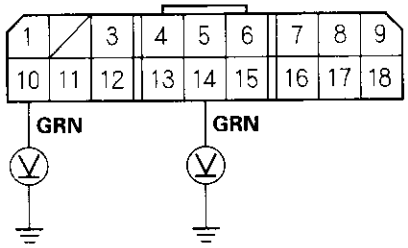


Wire side of female terminals

*Is the voltage as specified?*

**YES** – Faulty SRS unit; replace the SRS unit (see page 23-75). ■

**NO** – Short to power in the SRS main harness; replace the SRS main harness. ■

### DTC 2-5: Short to Ground in Passenger's Airbag Inflator

**Special Tools Required**
- SRS inflator simulator 07SAZ-TB4011A
- SRS simulator lead C 07TAZ-SZ5011A

1. Erase the DTC memory (see page 23-19).

2. Turn the ignition switch ON (II), and check that the SRS indicator comes on for about 6 seconds and then goes off.

   *Does the SRS indicator stay on?*

   **YES** – Go to step 3.

   **NO** – Intermittent failure, system is OK at this time. Go to Troubleshooting Intermittent Failures (see page 23-19).

3. Turn the ignition switch OFF, then disconnect the battery negative cable, and wait for 3 minutes.

4. Disconnect the passenger's airbag 2P connector from the SRS main harness (A).

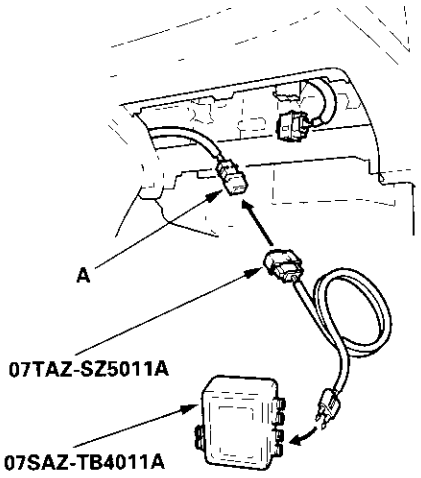


5. Connect the SRS inflator simulator (2 Ω connector) and the simulator lead to the SRS main harness.

6. Reconnect the battery negative cable.
7. Erase the DTC memory.
8. Read the DTC.

   *Is DTC 2-5 indicated?*

   **YES** – Go to step 9.

   **NO** – Short to ground in the passenger's airbag; replace the passenger's airbag (see page 23-67). ■

9. Turn the ignition switch OFF, then disconnect the battery negative cable, and wait for 3 minutes.
10. Disconnect the driver's airbag 2P connector (A) and both seat belt tensioner 2P connectors (B).

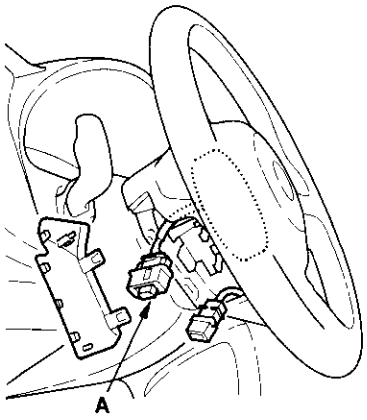


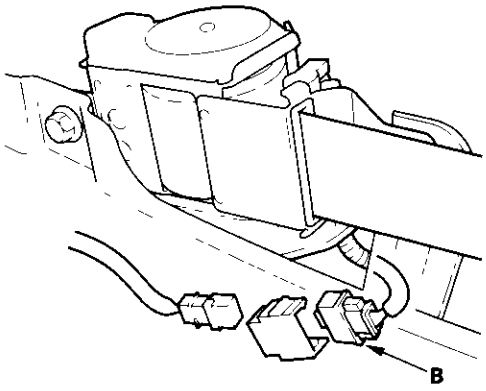


11. Disconnect the SRS unit 18P connector (A) from the SRS unit.

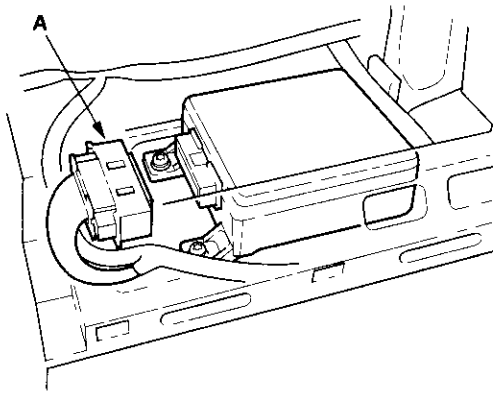


12. Disconnect the special tool from the SRS main harness.
13. Check resistance between the No. 10 terminal of the SRS unit 18P connector and body ground, and the No. 14 terminal and body ground. There should be an open circuit, or at least 1 MΩ.

**SRS UNIT 18P CONNECTOR**

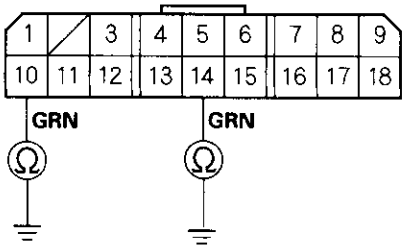


Wire side of female terminals

*Is the resistance as specified?*

**YES** – Faulty SRS unit; replace the SRS unit (see page 23-75). ■

**NO** – Short to ground in the SRS main harness; replace the SRS main harness. ■

## DTC Troubleshooting (cont'd)

### DTC 3-1: Open in Driver's Seat Belt Tensioner

### DTC 3-2: Increased Resistance in Driver's Seat Belt Tensioner

**Special Tools Required**
- SRS inflator simulator 07SAZ-TB4011A
- SRS simulator lead C 07TAZ-SZ5011A

1. Erase the DTC memory (see page 23-19).
2. Turn the ignition switch ON (II), and check that the SRS indicator comes on for about 6 seconds and then goes off.

   *Does the SRS indicator stay on?*

   **YES** – Go to step 3.

   **NO** – Intermittent failure, system is OK at this time. Go to Troubleshooting Intermittent Failures (see page 23-19).
3. Turn the ignition switch OFF, then disconnect the battery negative cable, and wait for 3 minutes.
4. Disconnect the driver's seat belt tensioner 2P connector from the SRS main harness (A).

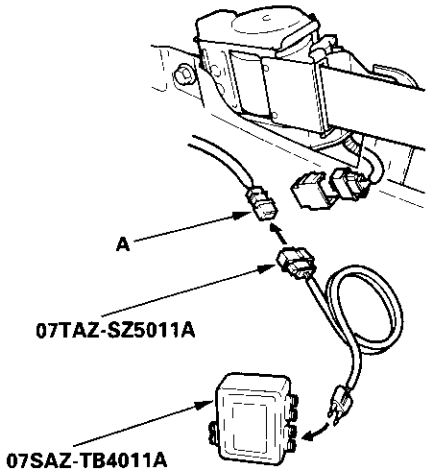


5. Connect the SRS inflator simulator (2 Ω connector) and the simulator lead to the SRS main harness.
6. Reconnect the battery negative cable.
7. Erase the DTC memory.
8. Read the DTC.

   *Is DTC 3-1 or DTC 3-2 indicated?*

   **YES** – Go to step 9.

   **NO** – Open or increased resistance in the driver's seat belt tensioner; replace the driver's seat belt (see page 23-4).■
9. Turn the ignition switch OFF, then disconnect the battery negative cable, and wait for 3 minutes.

10. Disconnect the driver's airbag connector (A), passenger's airbag connector (B), and passenger's seat belt tensioner connector (C).

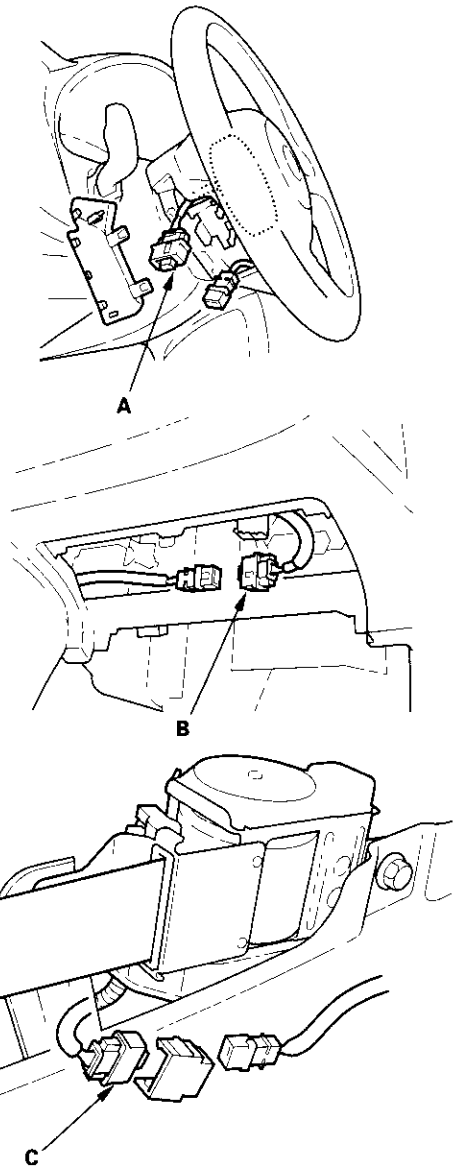


11. Disconnect the SRS unit 18P connector (A) from the SRS unit. Do not disconnect the special tool from the SRS main harness.

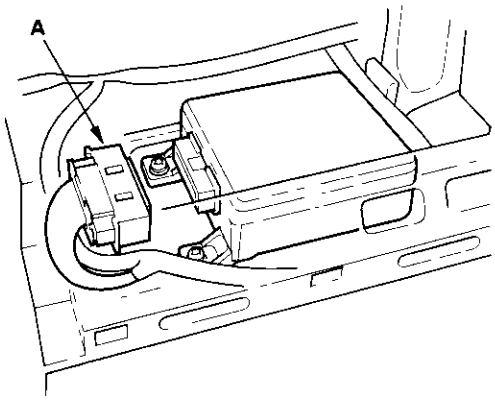


12. Check resistance between the No. 4 terminal and the No. 11 terminal of the SRS unit 18P connector. There should be 2.0 – 3.0 Ω.

**SRS UNIT 18P CONNECTOR**

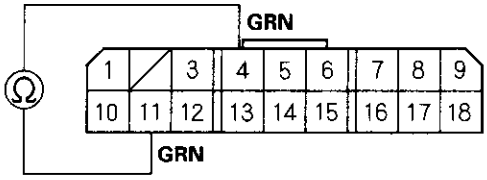


Wire side of female terminals

*Is the resistance as specified?*

**YES** – Faulty SRS unit or poor contact at the SRS unit 18P connector and the SRS unit. Check the connection; if the connection is OK, replace the SRS unit (see page 23-75).■

**NO** – Open or increased resistance in the SRS main harness; replace the SRS main harness.■

## DTC Troubleshooting (cont'd)

### DTC 3-3: Short to Another Wire or Decreased Resistance in Driver's Seat Belt Tensioner

**Special Tools Required**
- SRS inflator simulator 07SAZ-TB4011A
- SRS simulator lead C 07TAZ-SZ5011A

1. Erase the DTC memory (see page 23-19).
2. Turn the ignition switch ON (II), and check that the SRS indicator comes on for about 6 seconds and then goes off.

   *Does the SRS indicator stay on?*

   **YES** – Go to step 3.

   **NO** – Intermittent failure, system is OK at this time. Go to Troubleshooting Intermittent Failures (see page 23-19).
3. Turn the ignition switch OFF, then disconnect the battery negative cable, and wait for 3 minutes.
4. Disconnect the driver's seat belt tensioner 2P connector from the SRS main harness (A).

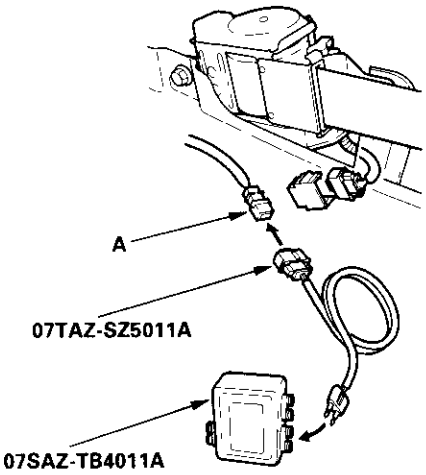


5. Connect the SRS inflator simulator (2 Ω connector) and the simulator lead to the SRS main harness.
6. Reconnect the battery negative cable.
7. Erase the DTC memory.
8. Read the DTC.

   *Is DTC 3-3 indicated?*

   **YES** – Go to step 9.

   **NO** – Short in the driver's seat belt tensioner; replace the driver's seat belt (see page 23-4).■
9. Turn the ignition switch OFF, then disconnect the battery negative cable, and wait for 3 minutes.

10. Disconnect the driver's airbag connector (A), passenger's airbag connector (B), and passenger's seat belt tensioner connector (C).

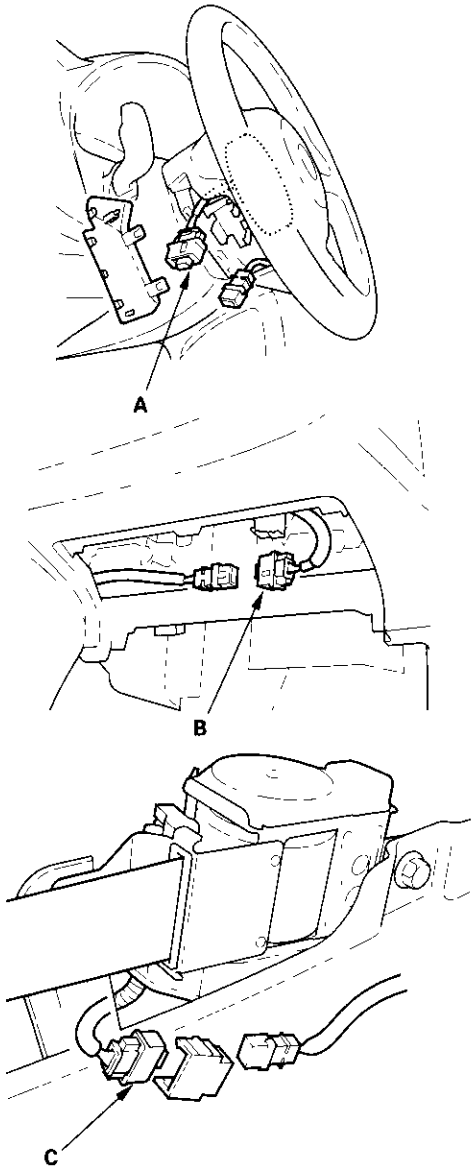


11. Disconnect the special tool from the SRS main harness.

12. Disconnect the SRS unit 18P connector (A) from the SRS unit.

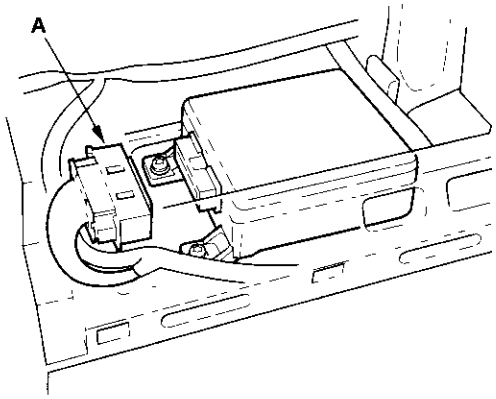


13. Check resistance between the No. 4 terminal and the No. 11 terminal of the SRS unit 18P connector. There should be an open circuit, or at least 1 MΩ.

**SRS UNIT 18P CONNECTOR**

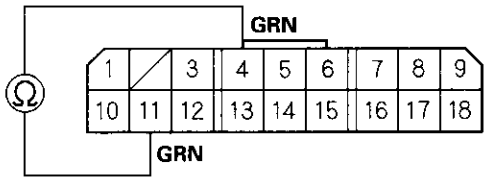


Wire side of female terminals

*Is the resistance as specified?*

**YES** – Faulty SRS unit; replace the SRS unit (see page 23-75).■

**NO** – Short in the SRS main harness; replace the SRS main harness.■

## DTC Troubleshooting (cont'd)

### DTC 3-4: Short to Power in Driver's Seat Belt Tensioner

**Special Tools Required**
- SRS inflator simulator 07SAZ-TB4011A
- SRS simulator lead C 07TAZ-SZ5011A

1. Erase the DTC memory (see page 23-19).
2. Turn the ignition switch ON (II), and check that the SRS indicator comes on for about 6 seconds and then goes off.

   *Does the SRS indicator stay on?*

   **YES** – Go to step 3.

   **NO** – Intermittent failure, system is OK at this time. Go to Troubleshooting Intermittent Failures (see page 23-19).
3. Turn the ignition switch OFF, then disconnect the battery negative cable, and wait for 3 minutes.
4. Disconnect the driver's seat belt tensioner 2P connector from the SRS main harness (A).

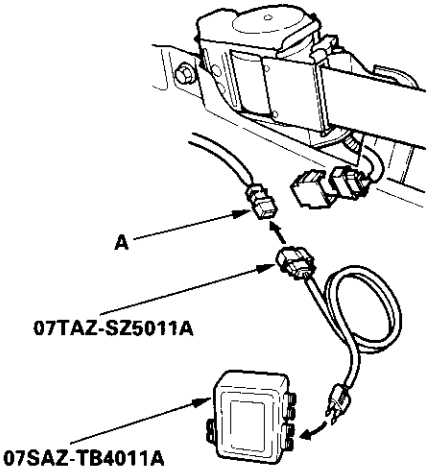


5. Connect the SRS inflator simulator (2 Ω connector) and the simulator lead to the SRS main harness.
6. Reconnect the battery negative cable.
7. Erase the DTC memory.
8. Read the DTC.

   *Is DTC 3-4 indicated?*

   **YES** – Go to step 9.

   **NO** – Short to power in driver's seat belt tensioner; replace the driver's seat belt (see page 23-4). ■
9. Turn the ignition switch OFF, then disconnect the battery negative cable, and wait for 3 minutes.

10. Disconnect the driver's airbag connector (A), passenger's airbag connector (B), and passenger's seat belt tensioner connector (C).

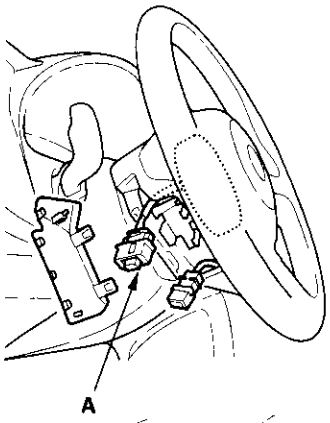


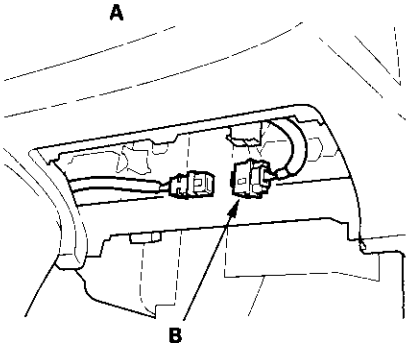


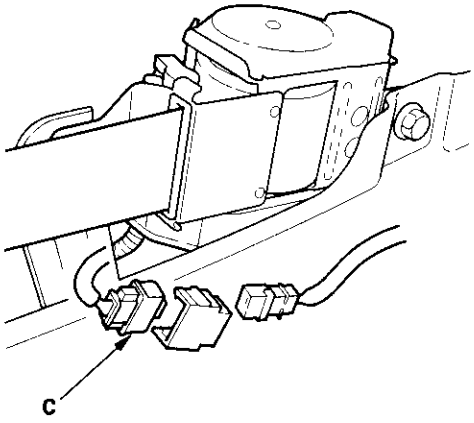


11. Disconnect the SRS unit 18P connector (A) from the SRS unit.

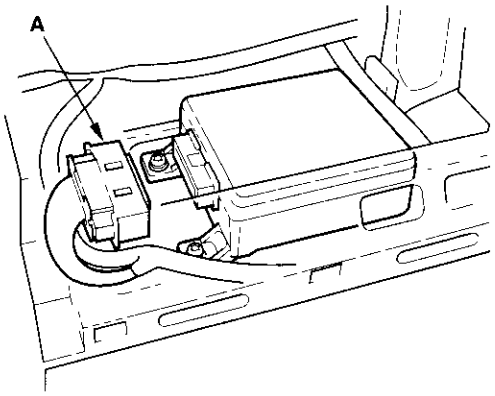


12. Disconnect the special tool from the SRS main harness.

13. Reconnect the battery negative cable.

14. Turn the ignition switch ON (II).

15. Check for voltage between the No. 4 terminal of the SRS unit 18P connector and body ground, and the No. 11 terminal and body ground. There should be 0.5 V or less.

**SRS UNIT 18P CONNECTOR**

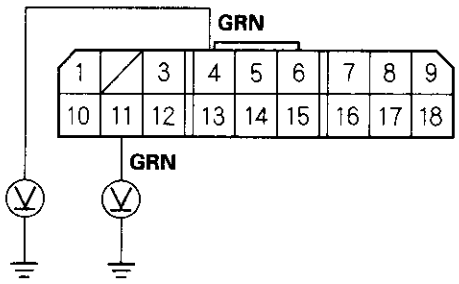


Wire side of female terminals

*Is the voltage as specified?*

**YES** – Faulty SRS unit; replace the SRS unit (see page 23-75). ■

**NO** – Short to power in the SRS main harness; replace the SRS main harness. ■

## DTC Troubleshooting (cont'd)

### DTC 3-5: Short to Ground in Driver's Seat Belt Tensioner

**Special Tools Required**
- SRS inflator simulator 07SAZ-TB4011A
- SRS simulator lead C 07TAZ-SZ5011A

1. Erase the DTC memory (see page 23-19).
2. Turn the ignition switch ON (II), and check that the SRS indicator comes on for about 6 seconds and then goes off.

   *Does the SRS indicator stay on?*

   **YES** – Go to step 3.

   **NO** – Intermittent failure, system is OK at this time. Go to Troubleshooting Intermittent Failures (see page 23-19).
3. Turn the ignition switch OFF, then disconnect the battery negative cable, and wait for 3 minutes.
4. Disconnect the driver's seat belt tensioner 2P connector from the SRS main harness (A).

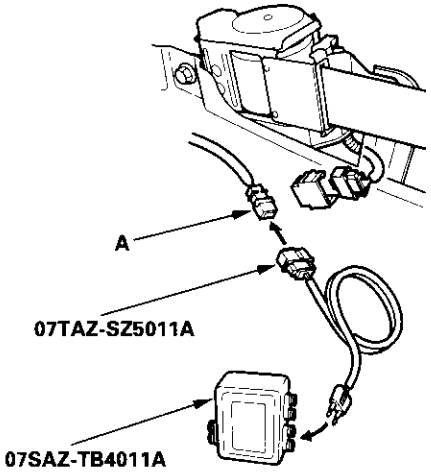


5. Connect the SRS inflator simulator (2 Ω connector) and the simulator lead to the SRS main harness.
6. Reconnect the battery negative cable.
7. Erase the DTC memory.
8. Read the DTC.

   *Is DTC 3-5 indicated?*

   **YES** – Go to step 9.

   **NO** – Short to ground in the driver's seat belt tensioner; replace the driver's seat belt (see page 23-4). ■
9. Turn the ignition switch OFF, then disconnect the battery negative cable, and wait for 3 minutes.

10. Disconnect the driver's airbag connector (A), passenger's airbag connector (B), and passenger's seat belt tensioner connector (C).

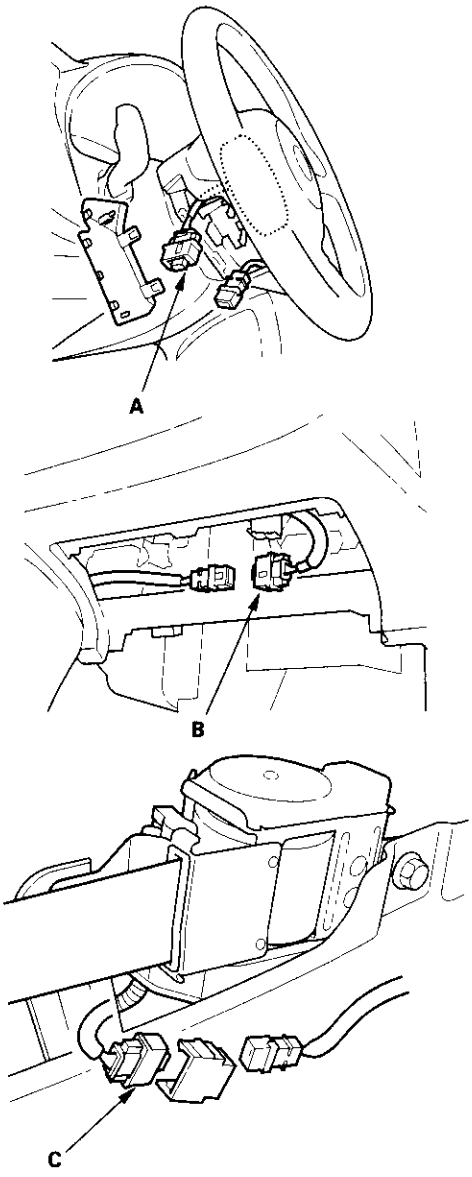


11. Disconnect the SRS unit 18P connector (A) from the SRS unit.

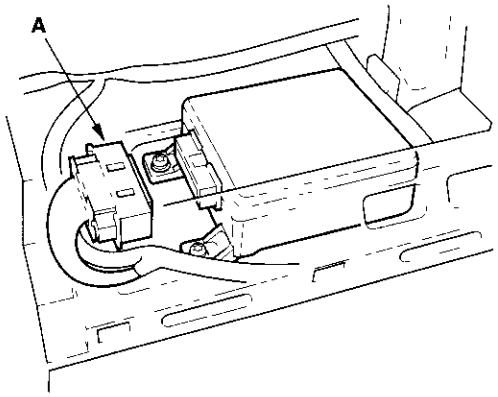


12. Disconnect the special tool from the SRS main harness.

13. Check resistance between the No. 4 terminal of the SRS unit 18P connector and body ground, and the No. 11 terminal and body ground. There should be an open circuit, or at least 1 MΩ.

**SRS UNIT 18P CONNECTOR**

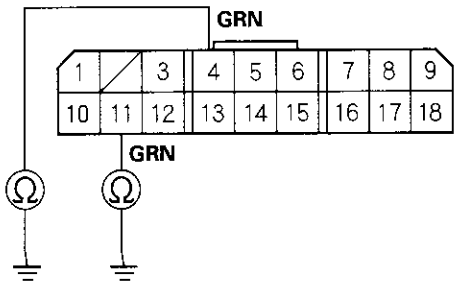


Wire side of female terminals

*Is the resistance as specified?*

**YES** – Faulty SRS unit; replace the SRS unit (see page 23-75).■

**NO** – Short to ground in the SRS main harness; replace the SRS main harness.■

## DTC Troubleshooting (cont'd)

### **DTC 4-1:** Open in Passenger's Seat Belt Tensioner

### **DTC 4-2:** Increased Resistance in Passenger's Seat Belt Tensioner

**Special Tools Required**
- SRS inflator simulator 07SAZ-TB4011A
- SRS simulator lead C 07TAZ-SZ5011A

1. Erase the DTC memory (see page 23-19).
2. Turn the ignition switch ON (II), and check that the SRS indicator comes on for about 6 seconds and then goes off.

   *Does the SRS indicator stay on?*

   **YES** – Go to step 3.

   **NO** – Intermittent failure, system is OK at this time. Go to Troubleshooting Intermittent Failures (see page 23-19).
3. Turn the ignition switch OFF, then disconnect the battery negative cable, and wait for 3 minutes.
4. Disconnect the passenger's seat belt tensioner 2P connector from the SRS main harness (A).

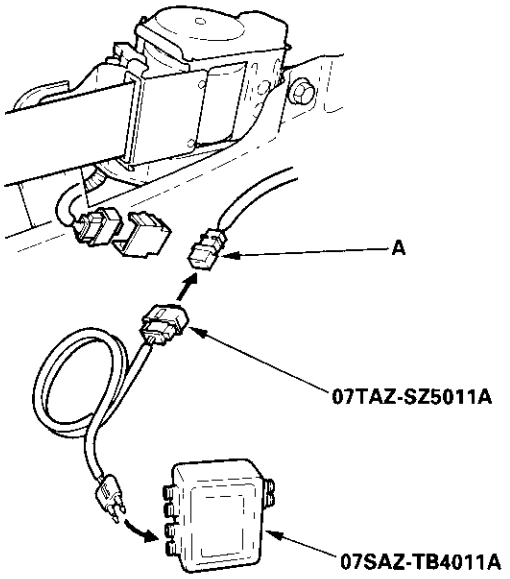


5. Connect the SRS inflator simulator (2 Ω connector) and the simulator lead to the SRS main harness.
6. Reconnect the battery negative cable.
7. Erase the DTC memory.
8. Read the DTC.

   *Is DTC 4-1 or DTC 4-2 indicated?*

   **YES** – Go to step 9.

   **NO** – Open or increased resistance in the passenger's seat belt tensioner; replace the passenger's seat belt (see page 23-4). ■
9. Turn the ignition switch OFF, then disconnect the battery negative cable, and wait for 3 minutes.

10. Disconnect the driver's airbag connector (A), passenger's airbag connector (B), and driver's seat belt tensioner connector (C).

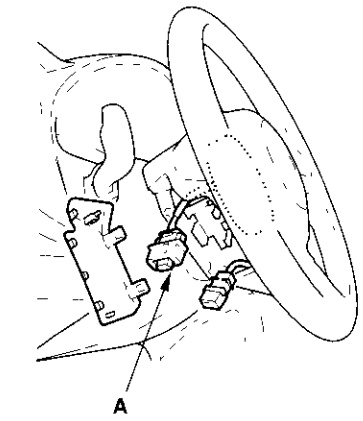


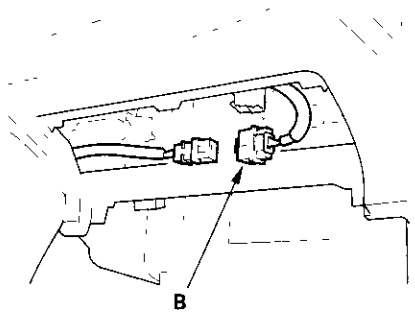


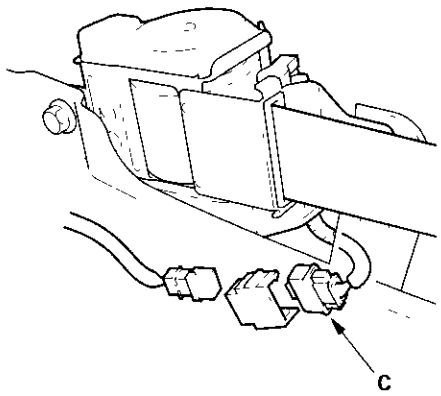


11. Disconnect the SRS unit 18P connector (A) from the SRS unit. Do not disconnect the special tool from the SRS main harness.

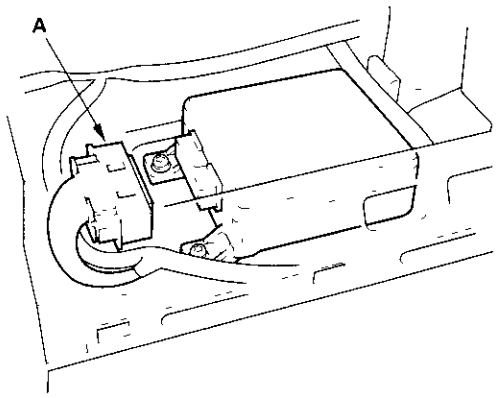


12. Check resistance between the No. 5 terminal and the No. 12 terminal of the SRS unit 18P connector. There should be 2.0 – 3.0 Ω.

**SRS UNIT 18P CONNECTOR**

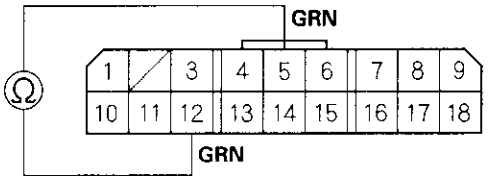


Wire side of female terminals

*Is the resistance as specified?*

**YES** Faulty SRS unit or poor contact at the SRS unit 18P connector and the SRS unit. Check the connection; if the connection is OK, replace the SRS unit (see page 23-75).■

**NO** Open or increased resistance in the SRS main harness; replace the SRS main harness.■

## DTC Troubleshooting (cont'd)

### DTC 4-3: Short to Another Wire or Decreased Resistance in Passenger's Seat Belt Tensioner

**Special Tools Required**
- SRS inflator simulator 07SAZ-TB4011A
- SRS simulator lead C 07TAZ-SZ5011A

1. Erase the DTC memory (see page 23-19).
2. Turn the ignition switch ON (II), and check that the SRS indicator comes on for about 6 seconds and then goes off.

   *Does the SRS indicator stay on?*

   **YES** – Go to step 3.

   **NO** – Intermittent failure, system is OK at this time. Go to Troubleshooting Intermittent Failures (see page 23-19).
3. Turn the ignition switch OFF, then disconnect the battery negative cable, and wait for 3 minutes.
4. Disconnect the passenger's seat belt tensioner 2P connector from the SRS main harness (A).

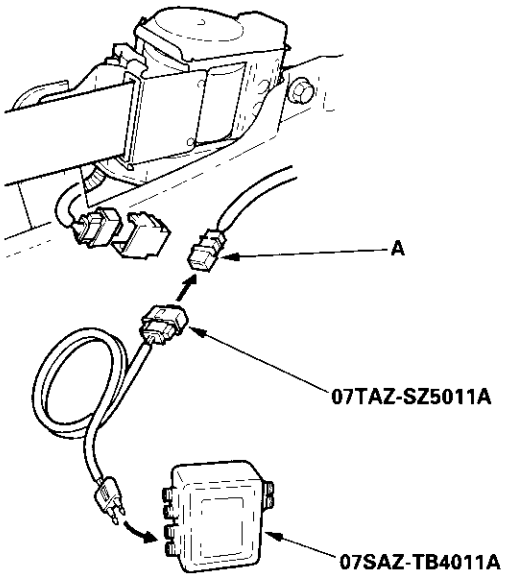


5. Connect the SRS inflator simulator (2 Ω connector) and the simulator lead to the SRS main harness.
6. Reconnect the battery negative cable.
7. Erase the DTC memory.
8. Read the DTC.

   *Is DTC 4-3 indicated?*

   **YES** – Go to step 9.

   **NO** – Short in the passenger's seat belt tensioner; replace the passenger's seat belt (see page 23-4). ■
9. Turn the ignition switch OFF, then disconnect the battery negative cable, and wait for 3 minutes.

10. Disconnect the driver's airbag connector (A), passenger's airbag connector (B), and driver's seat belt tensioner connector (C).

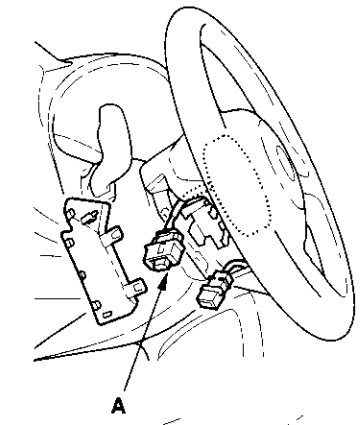


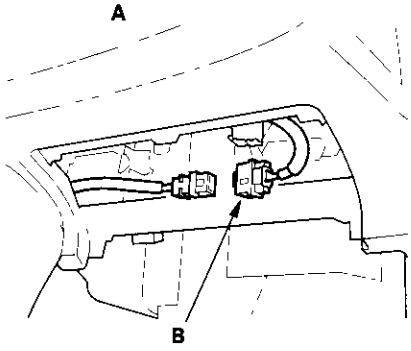


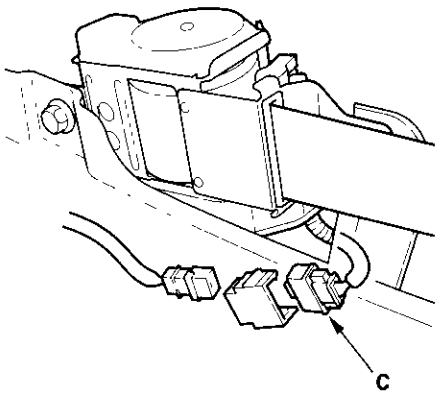


11. Disconnect the special tool (2 Ω connector) from the SRS main harness.

12. Disconnect the SRS unit 18P connector (A) from the SRS unit.

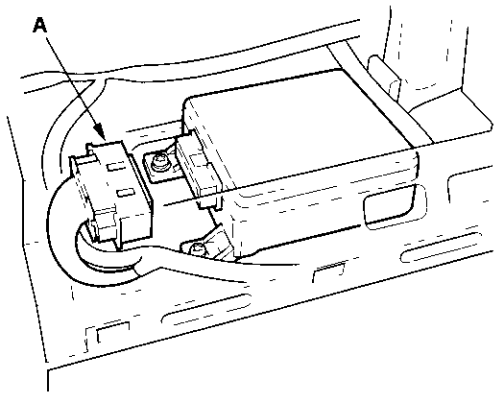


13. Check resistance between the No. 5 terminal and the No. 12 terminal of the SRS unit 18P connector. There should be an open circuit, or at least 1 MΩ.

**SRS UNIT 18P CONNECTOR**

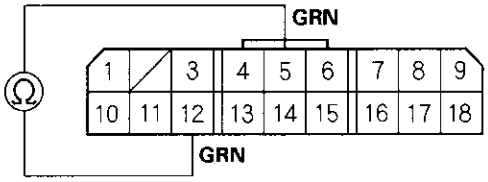


Wire side of female terminals

*Is the resistance as specified?*

**YES** – Faulty SRS unit; replace the SRS unit (see page 23-75). ■

**NO** – Short in the SRS main harness; replace the SRS main harness. ■

## DTC Troubleshooting (cont'd)

### **DTC 4-4:** Short to Power in Passenger's Seat Belt Tensioner

**Special Tools Required**
- SRS inflator simulator 07SAZ-TB4011A
- SRS simulator lead C 07TAZ-SZ5011A

1. Erase the DTC memory (see page 23-19).
2. Turn the ignition switch ON (II), and check that the SRS indicator comes on for about 6 seconds and then goes off.

   *Does the SRS indicator stay on?*

   **YES** – Go to step 3.

   **NO** – Intermittent failure, system is OK at this time. Go to Troubleshooting Intermittent Failures (see page 23-19).
3. Turn the ignition switch OFF, then disconnect the battery negative cable, and wait for 3 minutes.
4. Disconnect the passenger's seat belt tensioner 2P connector from the SRS main harness.

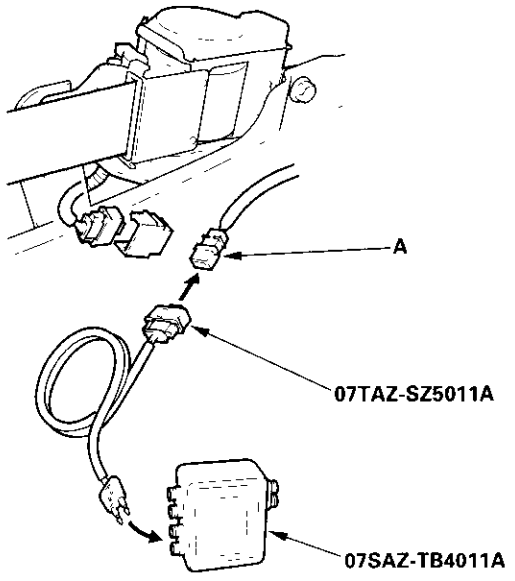


5. Connect the SRS inflator simulator (2 Ω connector) and the simulator lead to the SRS main harness.
6. Reconnect the battery negative cable.
7. Erase the DTC memory.
8. Read the DTC.

   *Is DTC 4-4 indicated?*

   **YES** · Go to step 9.

   **NO** – Short to power in the passenger's seat belt tensioner; replace the passenger's seat belt (see page 23-4).■
9. Turn the ignition switch OFF, then disconnect the battery negative cable, and wait for 3 minutes.

10. Disconnect the driver's airbag connector (A), passenger's airbag connector (B), and driver's seat belt tensioner connector (C).

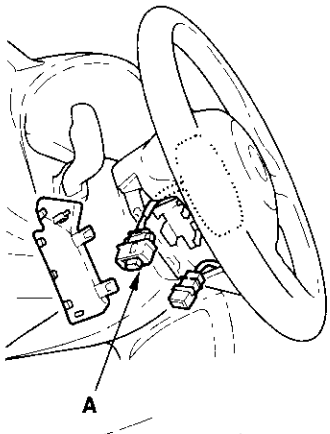


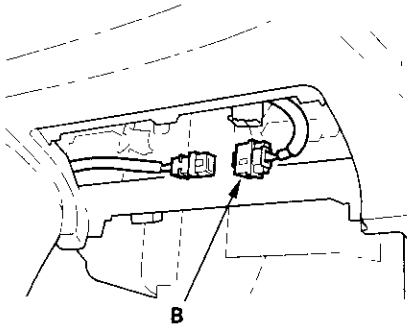


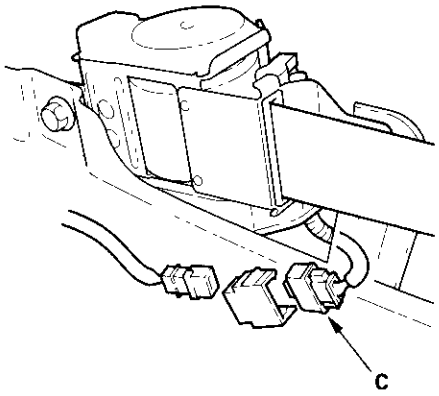


11. Disconnect the SRS unit 18P connector (A) from the SRS unit.

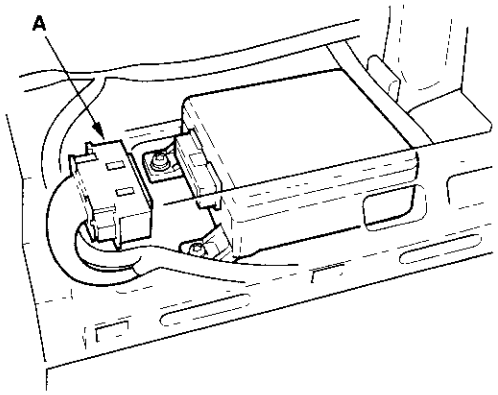


12. Disconnect the special tool from the SRS main harness.

13. Reconnect the battery negative cable.

14. Turn the ignition switch ON (II).

15. Check for voltage between the No. 5 terminal of the SRS unit 18P connector and body ground, and the No. 12 terminal and body ground. There should be 0.5 V or less.

**SRS UNIT 18P CONNECTOR**

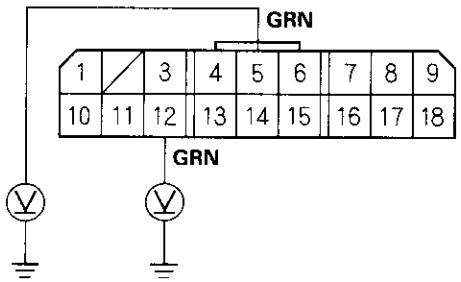


Wire side of female terminals

*Is the voltage as specified?*

**YES** – Faulty SRS unit; replace the SRS unit (see page 23-75).■

**NO** – Short to power in the SRS main harness; replace the SRS main harness.■

## DTC Troubleshooting (cont'd)

### DTC 4-5: Short to Ground in Passenger's Seat Belt Tensioner

**Special Tools Required**
- SRS inflator simulator 07SAZ-TB4011A
- SRS simulator lead C 07TAZ-SZ5011A

1. Erase the DTC memory (see page 23-19).
2. Turn the ignition switch ON (II), and check that the SRS indicator comes on for about 6 seconds and then goes off.

   *Does the SRS indicator stay on?*

   **YES** – Go to step 3.

   **NO** – Intermittent failure, system is OK at this time. Go to Troubleshooting Intermittent Failures (see page 23-19).
3. Turn the ignition switch OFF, then disconnect the battery negative cable, and wait for 3 minutes.
4. Disconnect the passenger's seat belt tensioner 2P connector from the SRS main harness (A).

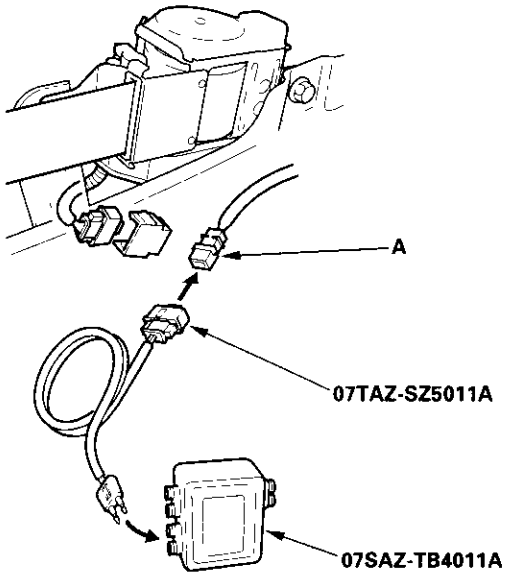


5. Connect the SRS inflator simulator (2 Ω connector) and the simulator lead to the SRS main harness.
6. Reconnect the battery negative cable.
7. Erase the DTC memory.
8. Read the DTC.

   *Is DTC 4-5 indicated?*

   **YES** – Go to step 9.

   **NO** – Short to ground in the passenger's seat belt tensioner; replace the passenger's seat belt (see page 23-4).■
9. Turn the ignition switch OFF, then disconnect the battery negative cable, and wait for 3 minutes.

10. Disconnect the driver's airbag connector (A), passenger's airbag connector (B), and driver's seat belt tensioner connector (C).

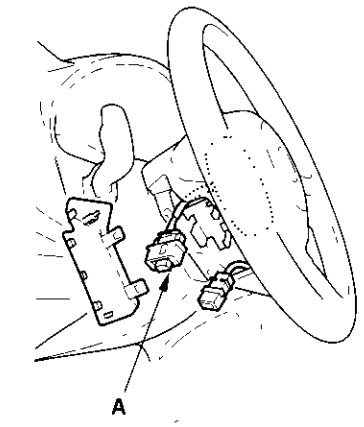


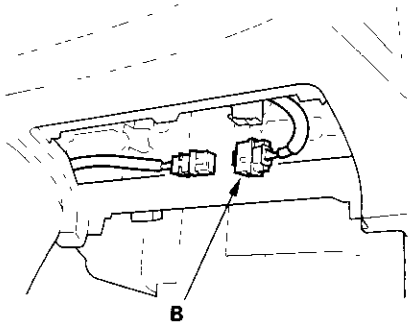


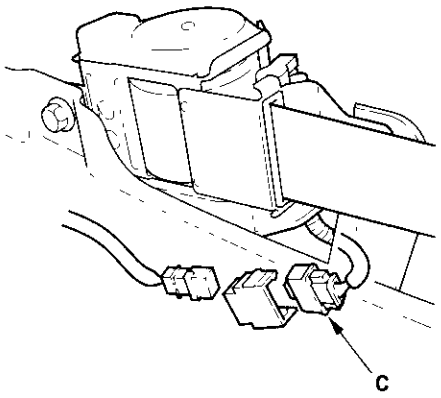


11. Disconnect the SRS unit 18P connector (A) from the SRS unit.

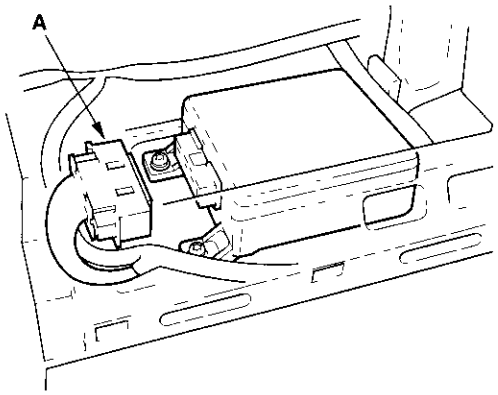


12. Disconnect the special tool from the SRS main harness.

13. Check resistance between the No. 5 terminal of the SRS unit 18P connector and body ground, and the No. 12 terminal and body ground. There should be an open circuit, or at least 1 MΩ.

**SRS UNIT 18P CONNECTOR**

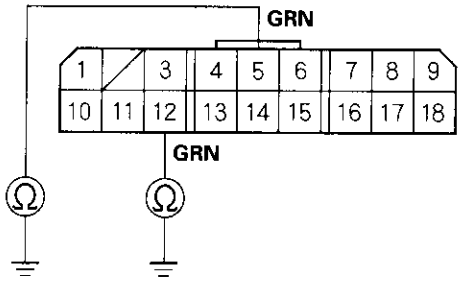


Wire side of female terminals

*Is the resistance as specified?*

**YES** – Faulty SRS unit; replace the SRS unit (see page 23-75). ■

**NO** – Short to ground in the SRS main harness; replace the SRS main harness. ■

## DTC Troubleshooting (cont'd)

### **DTC 5-1, 5-2, 5-3, 5-4, 6-1, 6-2, 6-3, 6-4, 7-1, 7-2, 7-3, 8-1, 8-2, 8-3, 8-4, 8-6, 9-1, 9-2:** Internal Failure of the SRS Unit

NOTE: Before troubleshooting any of these DTCs, check the battery/system voltage. If the voltage is low, repair the charging system before troubleshooting the SRS. If the battery/system voltage is now OK, ask the customer if the battery ever went dead.

1. Erase the DTC memory (see page 23-19).
2. Turn the ignition switch ON (II), and check that the SRS indicator comes on for about 6 seconds and then goes off.

   *Does the SRS indicator stay on?*

   **YES** – Replace the SRS unit (see page 23-75). ■

   **NO** – Intermittent failure, system is OK at this time. Go to Troubleshooting Intermittent failures (see page 23-19).

### **DTC 10-1:** Airbags and/or Seat Belt Tensioners Deployed

The SRS unit must be replaced after any airbags and/or tensioners have deployed (see page 23-75).

# SRS Indicator Circuit Troubleshooting

## The SRS Indicator Doesn't Come On

1. Turn the ignition switch ON (II), and see if the other indicators come on (brake system, etc).

   *Do the other indicators come on?*

   **YES** – Go to step 2.

   **NO** – Go to step 8.

2. Turn the ignition switch OFF, then remove the gauge assembly (see page 22-52). Disconnect gauge assembly connector A and B from the gauge assembly.

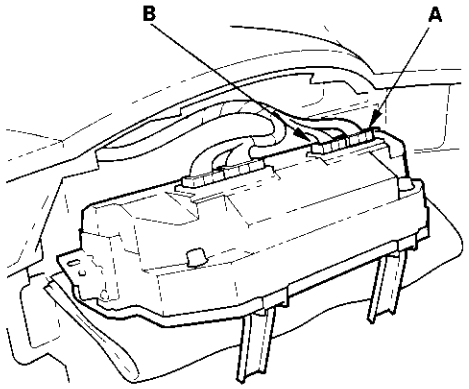


3. Check resistance between the No. 9 terminal of gauge assembly connector B (12P) and body ground. There should be 0 – 1.0 Ω.

**GAUGE ASSEMBLY CONNECTOR B (12P)**

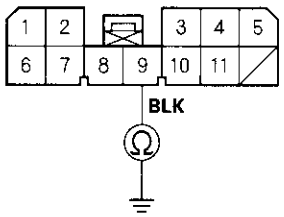


Wire side of female terminals

*Is the resistance as specified?*

**YES** – Go to step 4.

**NO** – Open in the BLK wire of dashboard wire harness A or faulty body ground terminal (G501). If the body ground terminal is OK, replace dashboard wire harness A.■

4. Check for voltage between the No. 4 terminal of gauge assembly connector A (14P) and body ground within the first 6 seconds after turning the ignition switch ON (II). There should be 8.5 V or less.

**GAUGE ASSEMBLY CONNECTOR A (14P)**

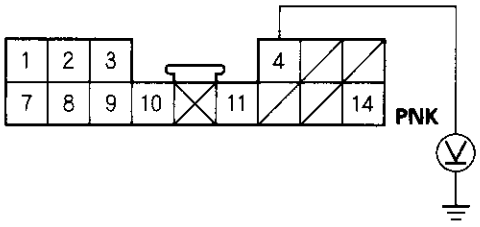


Wire side of female terminals

*Is the voltage as specified?*

**YES** – Faulty SRS indicator circuit in the gauge assembly; replace the gauge assembly.■

**NO** – Go to step 5.

5. Turn the ignition switch OFF.

(cont'd)

## SRS Indicator Circuit Troubleshooting (cont'd)

6. Disconnect SRS unit connector 18P connector (A) from the SRS unit

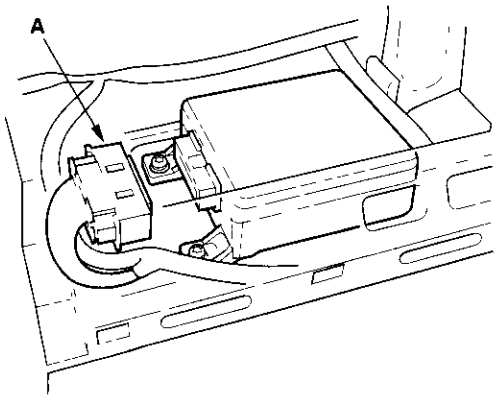


7. Disconnect gauge assembly connector A (14P). Connect a voltmeter between the No. 4 terminal of gauge assembly connector A (14P) and body ground. Turn the ignition switch ON (II), and measure voltage. There should be 0.5 V or less.

**GAUGE ASSEMBLY CONNECTOR A (14P)**

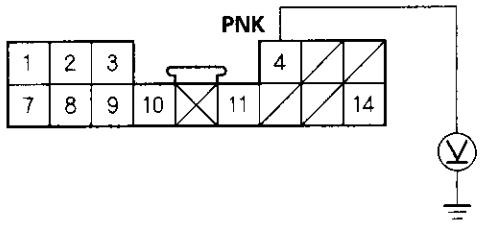


Wire side of female terminals

*Is the voltage as specified?*

**YES** – Faulty SRS unit; replace the SRS unit (see page 23-75). ■

**NO** – Short to power in the PNK wire of dashboard wire harness A or in the SRS main harness; replace the faulty harness. ■

8. Turn the ignition switch OFF. Check the No. 5 (7.5A) fuse in the under-dash fuse/relay box.

*Is the fuse blown?*

**YES** – Go to step 10.

**NO** – Go to step 9.

9. Connect a voltmeter between the No. 4 terminal of gauge assembly connector B (12P) and body ground. Turn the ignition switch ON (II), and measure the voltage. There should be battery voltage.

**GAUGE ASSEMBLY CONNECTOR B (12P)**

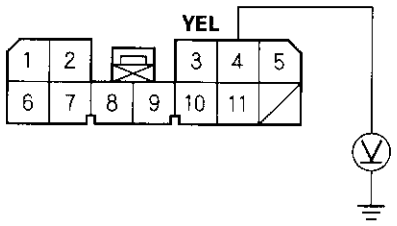


Wire side of female terminals

*Is there battery voltage?*

**YES** – Faulty SRS indicator circuit in the gauge assembly or poor contact at gauge assembly connector B (12P) and the gauge assembly; if the connection is OK, replace the gauge assembly. ■

**NO** – Open in the under-dash fuse/relay box No. 5 (7.5A) fuse circuit, or open in the YEL wire of dashboard wire harness. If the under-dash fuse/relay box is OK, replace the faulty harness. ■

10. Replace the No. 5 (7.5A) fuse, then check to see if the indicators comes on.

*Do the indicators come on?*

**YES** – The system is OK at this time. ■

**NO** – Repair short to ground in the under-dash fuse/relay box No. 5 (7.5A) fuse circuit. ■

## The SRS Indicator Stays On When In "SCS" Menu Method

NOTE:
- If you retrieve DTCs with the PGM Tester using the SRS menu method, retrieve flash codes with the Tester in SCS mode (see page 23-18).
- A new SRS unit must sense the entire system is OK before completing its initial self-test. The most common cause of an incomplete self-test is the failure to replace all deployed parts after a collision, in particular, seat belt tensioners.
- An incomplete self-test prevents the PGM Tester from retrieving DTCs, although flash codes are available in the Tester's SCS mode.

1. Erase the DTC memory using the MES connector (see page 23-19).

   *Does the SRS indicator go off while you are erasing the DTC memory?*

   **YES** – Go to step 37.

   **NO** – Go to step 2.

2. Check the No. 1 (10 A) fuse in the under-dash fuse/relay box.

   *Is the fuse OK?*

   **YES** – Go to step 17.

   **NO** – Go to step 3.

3. Replace the No. 1 (10 A) fuse.

4. Turn the ignition switch ON (II), and wait for 30 seconds. Then turn the ignition switch OFF.

5. Check the No. 1 (10 A) fuse.

   *Is the fuse OK?*

   **YES** – The system is OK at this time. ■

   **NO** Go to step 6.

6. Replace the No. 1 (10 A) fuse.

(cont'd)

## SRS Indicator Circuit Troubleshooting (cont'd)

7. Turn the ignition switch OFF. Disconnect the battery negative cable, and wait for 3 minutes.

8. Disconnect the driver's airbag connector (A), passenger's airbag connector (B), and both seat belt tensioner 2P connectors (C).

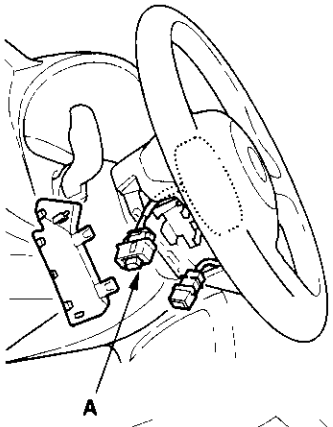


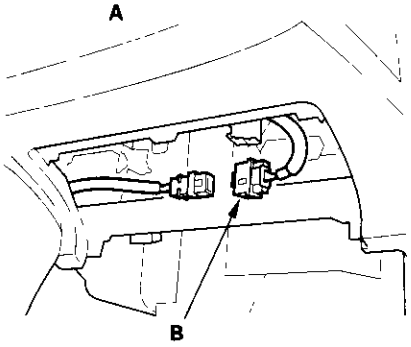


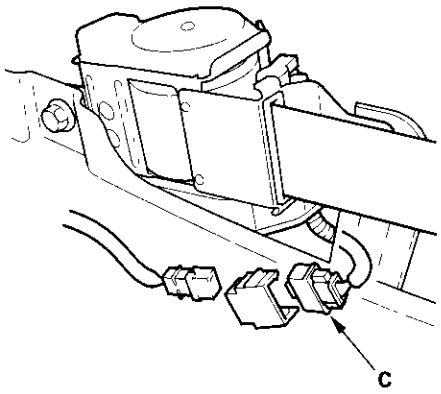


9. Disconnect the SRS unit 18P connector (A) from the SRS unit.

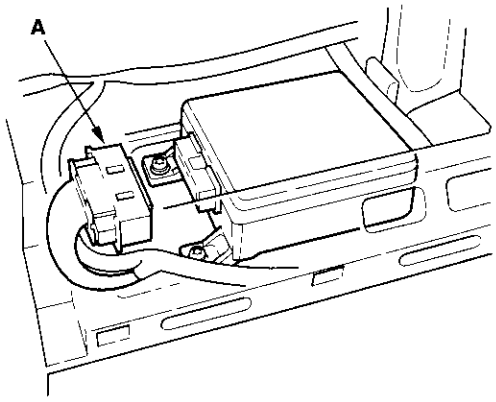


10. Reconnect the battery negative cable.

11. Turn the ignition switch ON (II), and wait for 30 seconds. Then turn the ignition switch OFF.

12. Check the No. 1 (10 A) fuse in the under-dash fuse/relay box.

    *Is the fuse OK?*

    **YES** – Short to ground in the SRS unit; replace the SRS unit (see page 23-75).■

    **NO** – Go to step 13.

13. Replace the No. 1 (10 A) fuse in the under-dash fuse/relay box.

14. Disconnect the SRS main harness connector A (2P) from the under-dash fuse/ralay box.

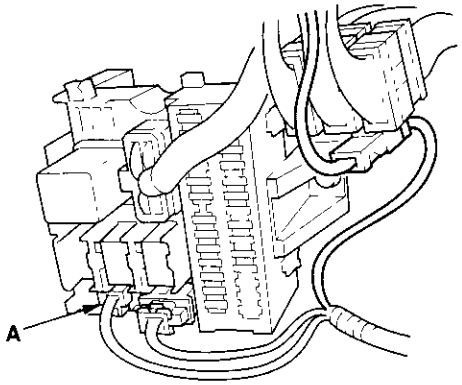

15. Turn the ignition switch ON (II), and wait for 30 seconds. Then turn the ignition switch OFF.

16. Check the No. 1 (10A) fuse in the under-dash fuse/relay box.

    *Is the fuse OK?*

    **YES** – Short to ground in dashboard wire harness A; replace dashboard wire harness A. ■

    **NO** – Short to ground in the under-dash fuse/relay box; replace the under-dash fuse/relay box. ■

17. Turn the ignition switch OFF. Disconnect the battery negative cable, and wait for 3 minutes.

18. Disconnect the driver's airbag connector (A), passenger's airbag connector (B), and both seat belt tensioner 2P connectors (C).

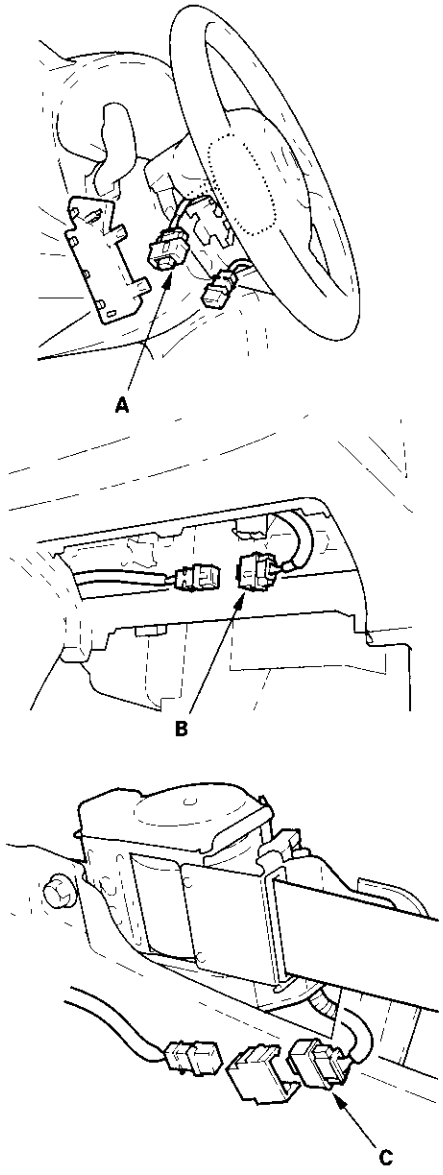


(cont'd)

## SRS Indicator Circuit Troubleshooting (cont'd)

19. Disconnet the SRS unit 18P connector (A) from the SRS unit.

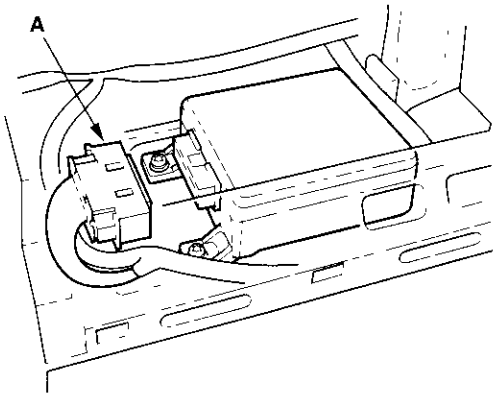


20. Reconnect the battery negative cable.

21. Connect a voltmeter between the No. 3 terminal of the SRS unit 18P connector and body ground. Turn the ignition switch ON (II), and measure voltage. There should be battery voltage.

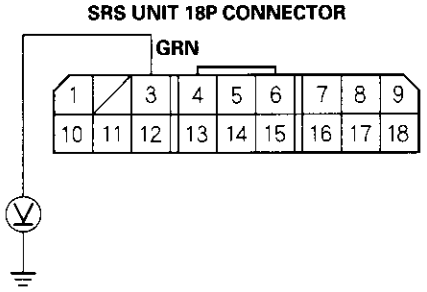


*Is there battery voltage?*

**YES** – Go to step 25.

**NO** – Go to step 22.

22. Turn the ignition switch OFF.

23. Disconnect SRS main harness connector A (2P) from the under-dash fuse/relay box.

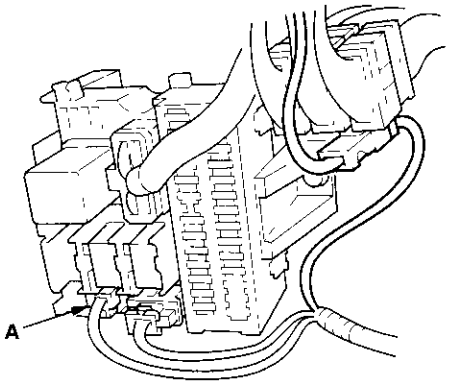


24. Check resistance between the No. 3 terminal of the SRS unit 18P connector and the No. 1 terminal of SRS main harness connector A. There should be 0 – 1.0 Ω.

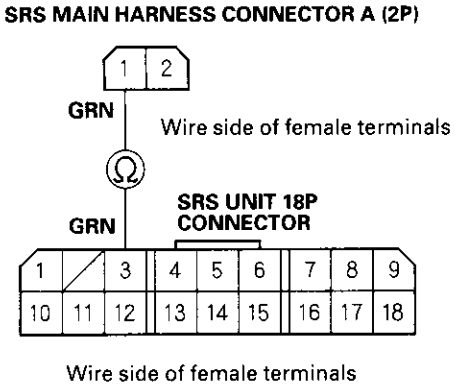


*Is the resistance as specified?*

**YES** – Open in the under-dash fuse/relay box or poor contact at SRS main harness connector A; check the connection. If the connection is OK, replace the under-dash fuse/relay box.■

**NO** – Open in SRS main wire harness; replace the SRS main wire harness.■

25. Turn the ignition switch OFF.

26. Connect the No. 3 terminal and the No. 6 terminal of the SRS unit 18P connector with a jumper wire.

**SRS UNIT 18P CONNECTOR**

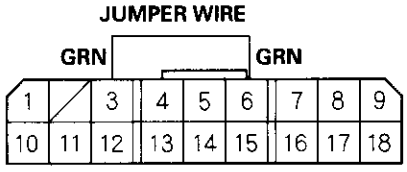


Wire side of female terminals

27. Turn the ignition switch ON (II).

28. Check the SRS indicator.

*Did the SRS indicator go off?*

**YES** – Faulty SRS unit; replace the SRS unit.■

**NO** – Go to step 29.

29. Turn the ignition switch OFF.

30. Disconnect the jumper wire between the No. 3 terminal and the No. 6 terminal of the SRS unit 18P connector.

31. Check the No. 1 (10A) fuse in the under-dash fuse/relay box.

*Is the fuse OK?*

**YES** – Go to step 35.

**NO** – Go to step 32.

32. Replace the No. 1 (10A) fuse.

33. Remove the gauge assembly (see page 22-52), then disconnect gauge assembly connector A from the gauge assembly.

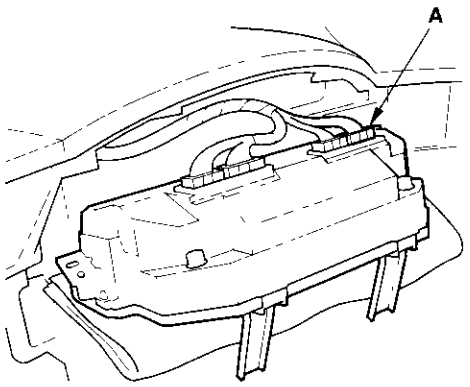


34. Check resistance between the No. 6 terminal of the SRS unit 18P connector and body ground. There should be an open circuit, or at least 1 MΩ.

**SRS UNIT 18P CONNECTOR**

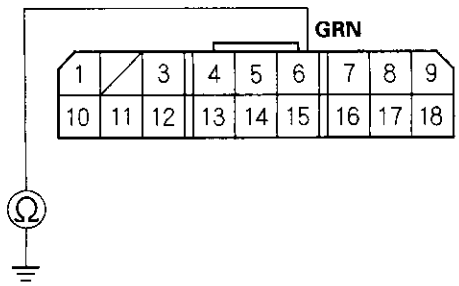


Wire side of female terminals

*Is the resistance as specified?*

**YES** – Faulty SRS indicator circuit in the gauge assembly; replace the gauge assembly.■

**NO** – Short to ground in the SRS main harness or in dashboard wire harness A; replace the faulty harness.■

(cont'd)

## SRS Indicator Circuit Troubleshooting (cont'd)

35. Remove the gauge assembly (see page 22-52), then disconnect gauge assembly connector A from the gauge assembly.

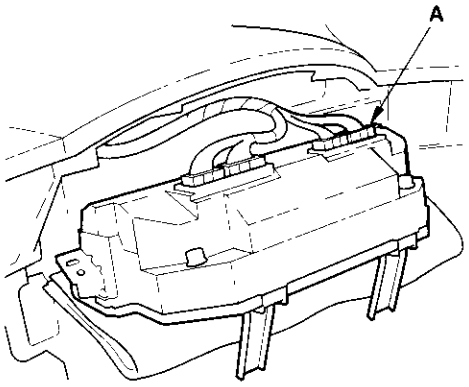


36. Check resistance between the No. 4 terminal of gauge assembly connector A (14P) and No. 6 terminal of the SRS unit 18P connector. There should be 1 Ω or less.

**GAUGE ASSEMBLY CONNECTOR A (14P)**

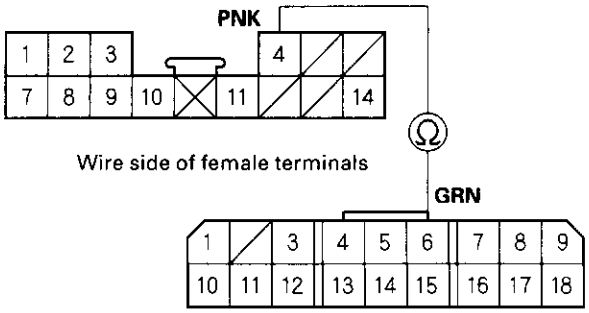


**SRS UNIT 18P CONNECTOR**

*Is the resistance as specified?*

**YES** – Faulty SRS indicator circuit in the gauge assembly or poor contact at gauge assembly connector A (14P); Check the connection. If the connection is OK, replace the gauge assembly. ■

**NO** – Open in the SRS main harness or in dashboard wire harness A; replace the faulty harness. ■

37. Turn the ignition switch OFF.

38. If necessary, remove the SCS service connector from the MES connector.

39. Turn the ignition switch ON (II).

*Does the SRS indicator come on for about 6 seconds and then go off?*

**YES** – The system is OK at this time. ■

**NO** – Go to step 40.

40. Disconnet the SRS unit 18P connector (A) from the SRS unit.

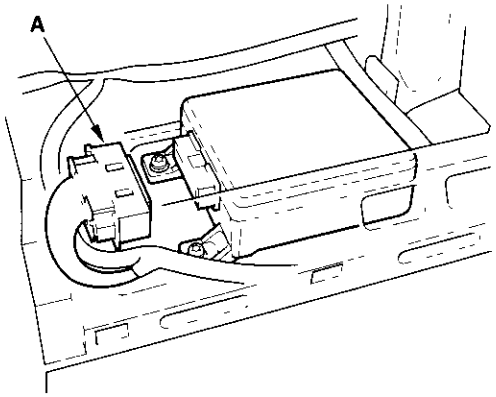

41. Connect a Honda PGM Tester (A) to the data link connector (B) and follow the Tester's prompts in the "SCS" menu (see the Tester's operating manual).

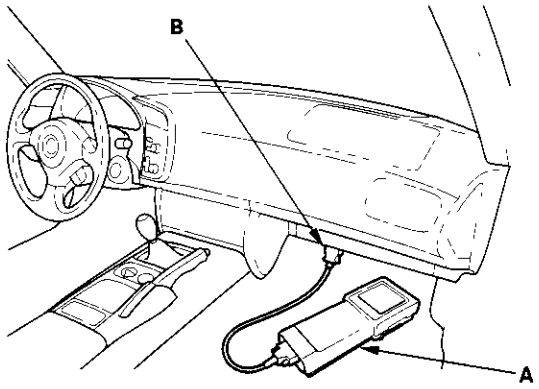


42. Check resistance between the No. 9 terminal of the SRS unit 18P connector and body ground. There should be 0-1.0 Ω.

**SRS UNIT 18P CONNECTOR**

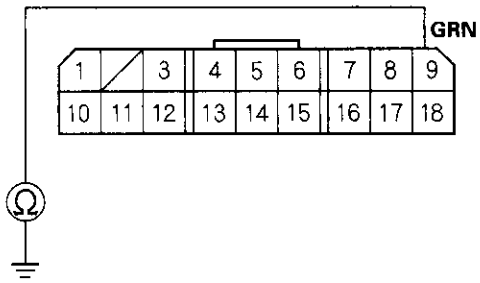


Wire side of female terminals

*Is the resistance as specified?*

**YES** – Faulty SRS unit or poor contact at the SRS unit 18P connector; check the connection; if the connection is OK, replace the SRS unit (see page 23-75).■

**NO** – Open in the SCS line between the No. 9 terminal of the SRS unit 18P connector and the No. 9 terminal (BRN wire) of the data link connector (DLC) or open between the No. 4 terminal of the DLC and body ground. Repair the open wire (s).

## Component Replacement/Inspection After Deployment

NOTE: Before doing any SRS repairs, use the PGM Tester SRS menu method to check for DTCs; refer to the DTC Troubleshooting Index for the less obvious deployed parts (seat belt tensioners, etc.)

After a collision where the airbag(s) deployed, replace these items:
- SRS unit
- Deployed airbag(s)
- Seat belt tensioners

During the repair process, inspect these areas:
- Inspect all the SRS wire harnesses. Replace, don't repair, any damaged harnesses.
- Inspect the cable reel for heat damage. If there is any damage, replace the cable reel.

After the vehicle is completely repaired, turn the ignition switch ON (II). If the SRS indicator comes on for about 6 seconds and then goes off, the SRS is OK. If the indicator does not function properly, use the PGM Tester SRS Menu Method to read the DTC(s). If this doesn't retrieve any codes, use the Tester's SCS menu method (see page 23-18). If you still cannot retrieve a code, go to SRS Indicator Circuit Troubleshooting.

## Driver's Airbag Replacement

### Removal

1. Disconnect the battery negative cable, and wait at least 3 minutes before beginning work.

2. Remove the access panel (A) from the steering wheel, then disconnect the driver's airbag 2P connector (B) from the cable reel.

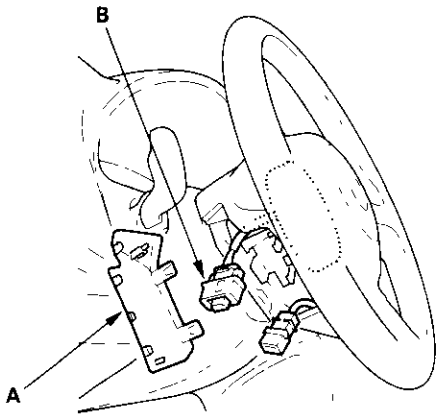


3. Remove the cover (A) from the steering wheel, remove the two Torx bolts (B) using a Torx T30 bit, then remove the driver's airbag (C).

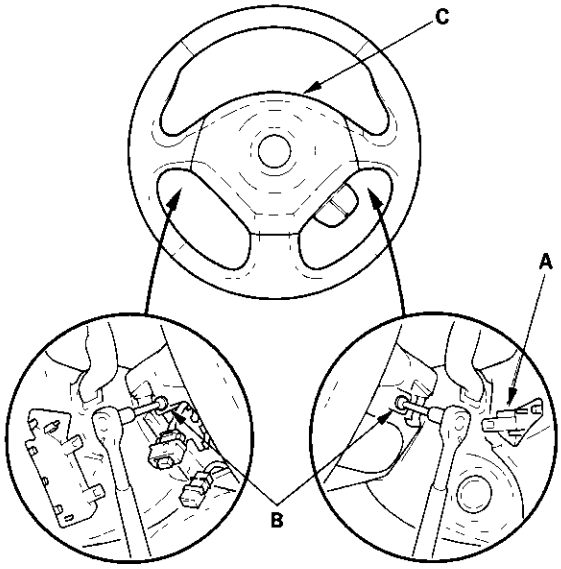


4. Disconnect the horn connector from the steering wheel.

(cont'd)

## Driver's Airbag Replacement (cont'd)

### Installation

1. Place the new driver's airbag (A) in the steering wheel, and secure it with new Torx bolts (B). Install the covers (C).

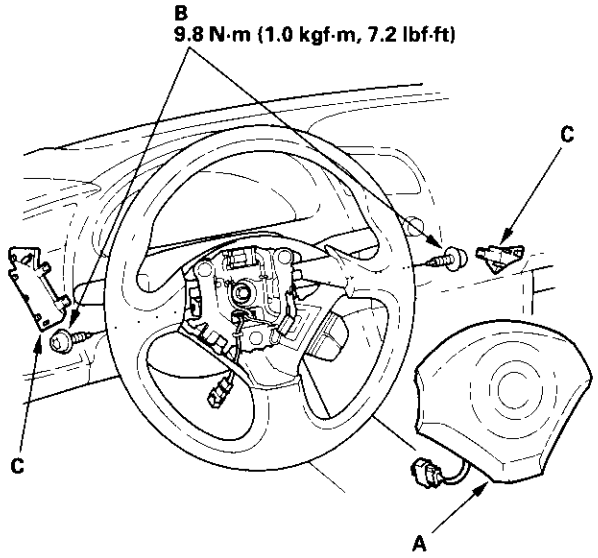


2. Connect the cable reel 2P connector to the driver's airbag (A), then install the access panel (C) on the steering wheel.

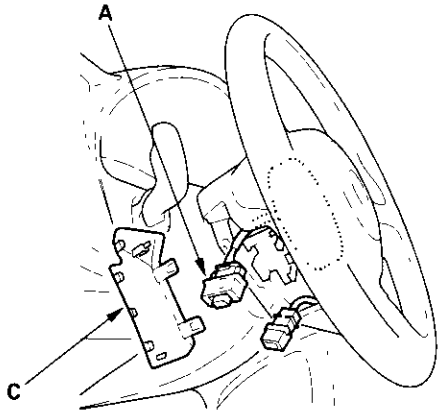


3. Connect the battery negative cable.

4. After installing the airbag, confirm proper system operation:

   - Turn the ignition switch ON (II); the SRS indicator should come on for about 6 seconds and then go off.
   - Make sure the horn works.

## Passenger's Airbag Replacement

### Removal

1. Disconnect the battery negative cable, and wait at least 3 minutes before beginning work.

2. Remove the passenger's dashboard lower cover (see page 20-81), then disconnect the passenger's airbag 2P connector (A) from the SRS main harness.

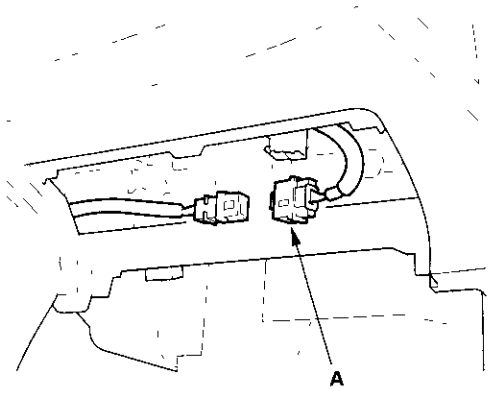


3. Remove the three mounting nuts (A) from the bracket. Cover the lid and dashboard with a cloth, and pry carefully with a screwdriver to lift the passenger's airbag (B) out of the dashboard.

   NOTE: The airbag lid has pawls on its side that attach it to the dashboard.

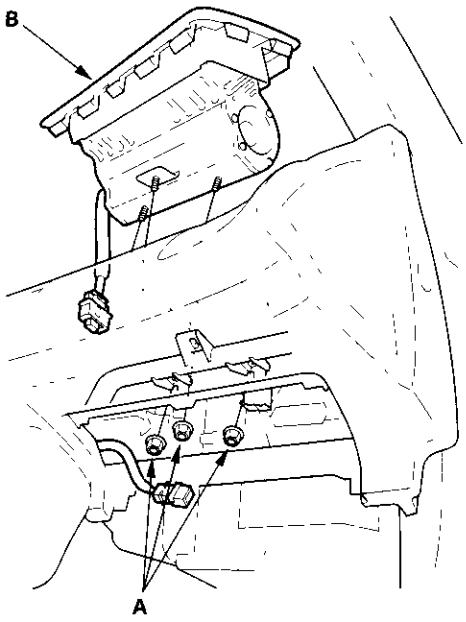


(cont'd)

## Passenger's Airbag Replacement (cont'd)

### Installation

1. Place the new passenger's airbag (A) into the dashboard. Tighten the passenger's airbag mounting nuts (B).

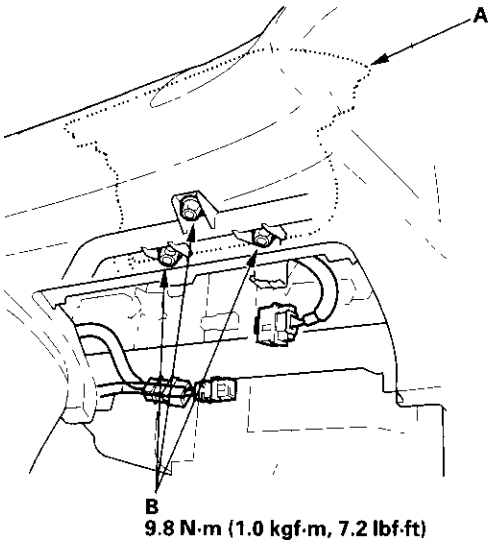


**9.8 N·m (1.0 kgf·m, 7.2 lbf·ft)**

2. Connect the passenger's airbag 2P connector (A) to the SRS main harness.
   Attach the passenger's airbag connector to the connector holder (B), then reinstall the passenger's dashboard lower cover (see page 20-81).

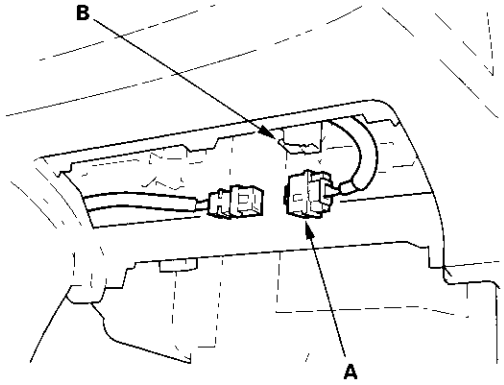


3. Reconnect the battery negative cable.

4. After installing the airbag, confirm proper system operation: Turn the ignition switch ON (II); the SRS indicator should come on for about 6 seconds and then go OFF.

# Airbag Disposal

**Special Tool Required**
Deployment Tool 07HAZ-SG00500

Before scrapping any airbags (including those in a whole vehicle to be scrapped), the airbags must be deployed. If the vehicle is still within the warranty period, the Honda District Service Manager must give approval and/or special instructions before deploying the airbags (and seat belt tensioners). Only after the airbags (and seat belt tensioners) have been deployed (as the result of vehicle collision, for example), can they be scrapped. If the airbags (and seat belt tensioners) appear intact (not deployed), treat them with extreme caution. Follow this procedure.

## Deploying Airbags In the Vehicle

If an SRS equipped vehicle is to be entirely scrapped, its airbags (and seat belt tensioners) should be deployed while still in the vehicle. The airbags (and seat belt tensioners) should not be considered as salvageable parts and should never be installed in another vehicle.

1. Turn the ignition switch OFF, disconnect the battery negative cable, and wait at least 3 minutes.
2. Confirm that each airbag and each seat belt tensioner is securely mounted.
3. Confirm that the special tool is functioning properly by following the check procedure on the tool label.

**Driver's Airbag:**

4. Remove the access panel (A), then disconnect the driver's airbag 2P connector (B) from the cable reel.

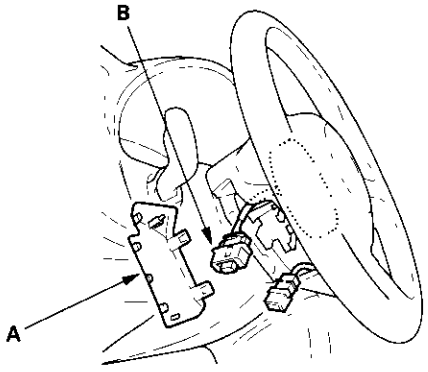


**Passenger's Airbag:**

5. Remove the passenger's dashboard lower cover, then disconnect the passenger's airbag 2P connector (A) from the SRS main harness.

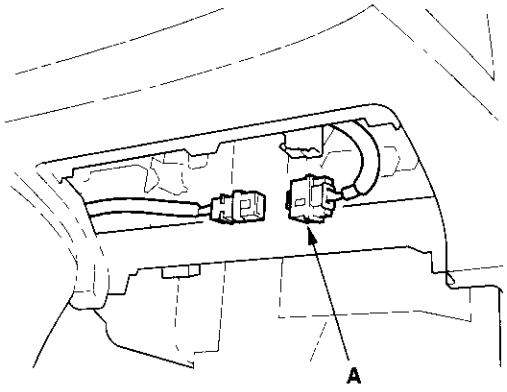


**Seat Belt Tensioner:**

6. Remove the seat belt tensioner (see page 23-4), then disconnect the seat belt tensioner 2P connector (A) from the SRS main harness.

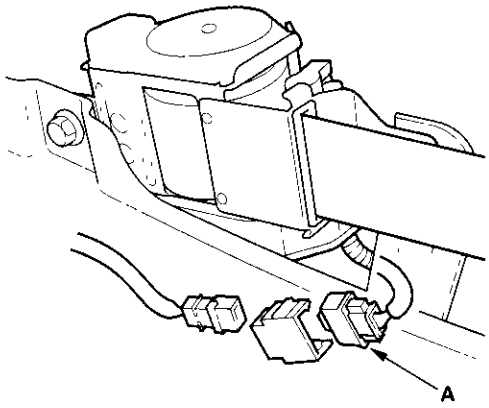


(cont'd)

## Airbag Disposal (cont'd)

7. Pull the seat belt (A) out all the way and cut it.

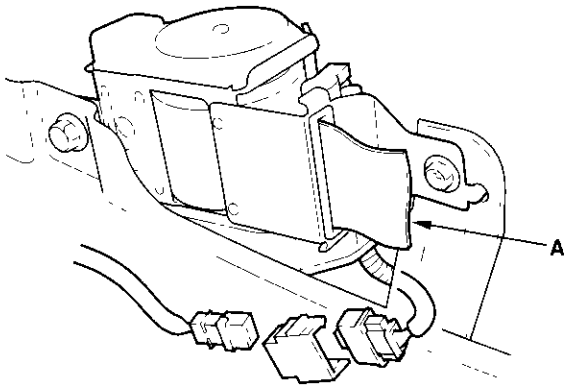


8. Cut off the airbag or seat belt tensioner connector, strip the ends of the airbag wires and seat belt tensioner wires (A), and connect the deployment tool alligator clips (A) to the airbags and seat belt tensioners. Place the deployment tool at least 30 feet (10 meters) away from the vehicle.

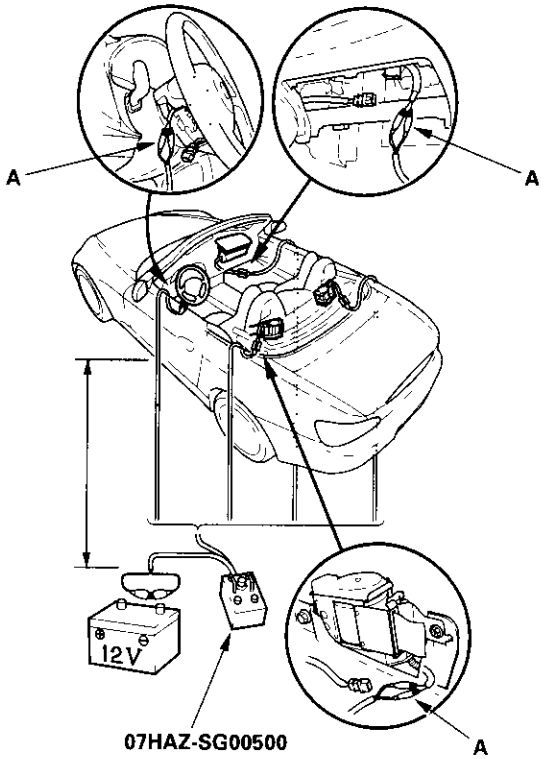


9. Connect a 12 volt battery to the tool.

   - If the green light on the tool comes on, the igniter circuit is defective and cannot deploy the components. Go to Disposal of Damaged Components.
   - If the red light on the tool comes on, the component is ready to be deployed.

10. Push the tool's deployment switch. The airbags and tensioners should deploy (deployment is both highly audible and visible: a loud noise and rapid inflation of the bag, followed by slow deflation).

    - If the airbags deploy and the green light on the tool comes on, continue with this procedure.
    - If an airbag doesn't deploy, yet the green light comes ON, its igniter is defective. Go to Disposal of Damaged Components.
    - During deployment, the airbags, can become hot enough to burn you. Wait 30 minutes after deployment before touching the airbags.

11. Dispose of the complete airbag. No part of it can be reused. Place it in a sturdy plastic bag (A) and seal it securely.

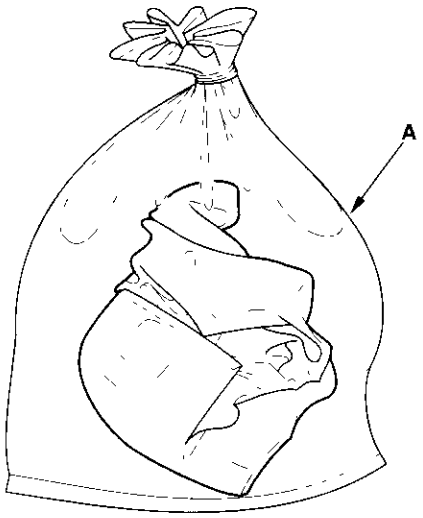

## Deploying Components Out of the Vehicle

If an intact airbag or seat belt tensioner has been removed from a scrapped vehicle, or has been found defective or damaged during transit, storage, or service, it should be deployed as follows:

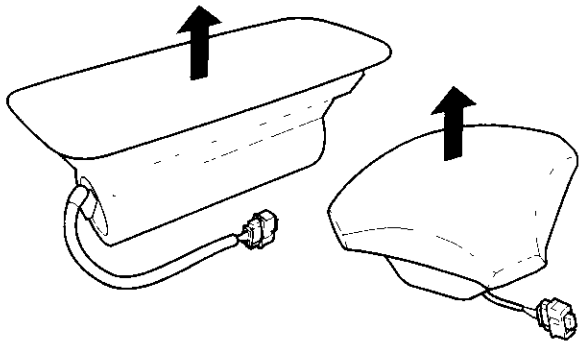

1. Confirm that the special tool is functioning properly by following the check procedure on this page or on the tool label.
2. Position the airbag face up, outdoors on flat ground at least 30 feet (10 meters) from any obstacles or people.
3. Follow steps 8 through 11 of the in-vehicle deployment procedure.

## Disposal of Damaged Components

1. If installed in the vehicle, follow the removal procedure for the driver's airbag (see page 23-65), passenger's airbag (see page 23-67), and seat belt tensioner (see page 23-4).
2. In all cases, make a short circuit by cutting, stripping, and twisting together the two airbag inflator wires and seat belt tensioner wires.
3. Package the airbag or seat belt tensioner in the same packaging that the new replacement part came in.
4. Mark the outside of the box "DAMAGED AIRBAG NOT DEPLOYED" or "DAMAGED SEAT BELT TENSIONER NOT DEPLOYED" so it does not get confused with your parts stock.
5. Contact your Honda District Service Manager for how and where to return it for disposal.

## Deployment Tool Check

1. Connect the yellow clips to both switch protector handles on the tool; connect the tool to a battery.
2. Push the operation switch: green means the tool is OK; red means the tool is faulty.
3. Disconnect the battery and the yellow clips.

## Cable Reel Replacement

### Removal

1. Make sure the front wheels are aligned straight ahead.
2. Disconnect the battery negative cable and wait at least 3 minutes.
3. Remove the driver's airbag (see page 23-65).
4. Remove the steering wheel (see page 17-6).
5. Remove the column cover screws (A), then remove the column covers (B, C).

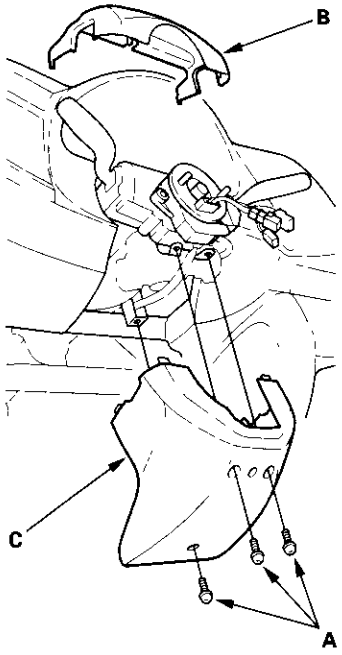


6. Disconnect the SRS main harness 2P connector (A) from the cable reel (B), then disconnect the dashboard wire harness 4P connector (C) from the cable reel.

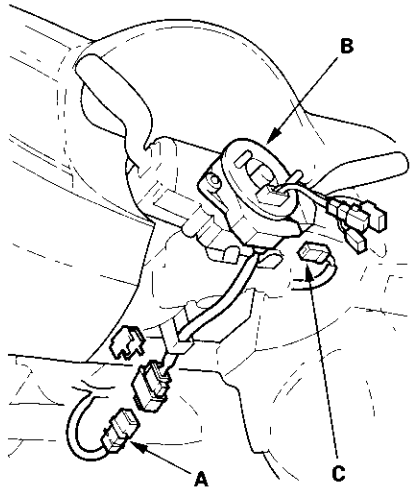


7. Remove the screws (A) from the cable reel, then remove the cable reel from the column.

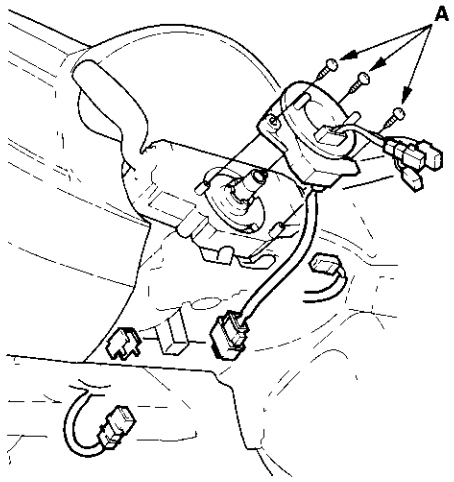

## Installation

1. Before installing the steering wheel, the front wheels should be aligned straight ahead.
2. Disconnect the battery negative cable, and wait at least 3 minutes.
3. Set the cancel sleeve (A) so that the projections (B) are aligned vertically.

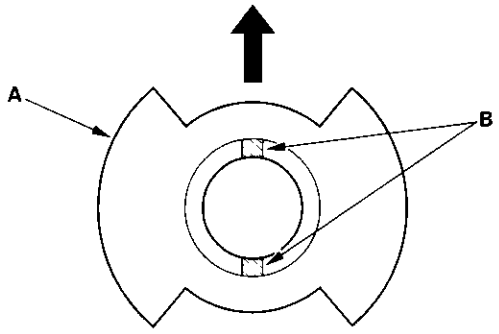


4. Carefully install the cable reel (A) on the steering column shaft. Then connect the 4P connector (B) to the cable reel, and connect the 2P connector (C) to the SRS main harness.

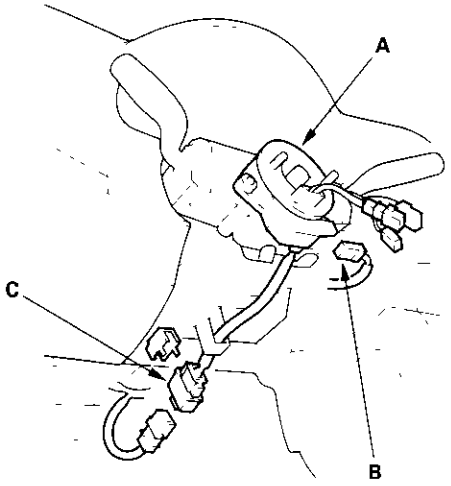


5. Install the steering column covers.
6. If necessary, center the cable reel. (New replacement cable reels come centered.) Do this by first rotating the cable reel clockwise until it stops. Then rotate it counterclockwise (about 2 1/2 turns) until the arrow mark on the cable reel label points straight up.

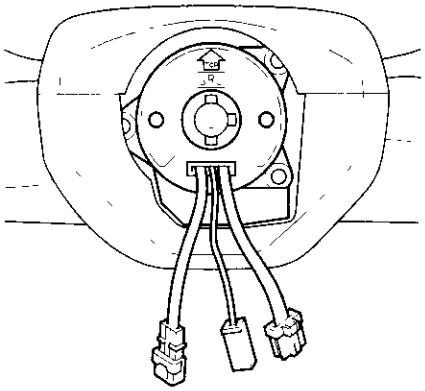

7. Position the two tabs (A) of the turn signal cancelling sleeve (B) as shown, and install the steering wheel on to the steering column shaft, making sure the steering wheel hub (C) engages the pins (D) of the cable reel and tabs of the cancelling sleeve. Do not tap on the steering wheel or steering column shaft when installing the steering wheel.

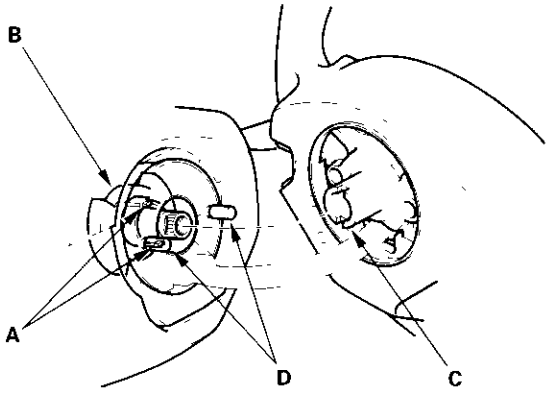


(cont'd)

## Cable Reel Replacement (cont'd)

8. Install the steering wheel bolt (A), and tighten it to 38 N·m (3.9 kgf·m, 28 lbf·ft).

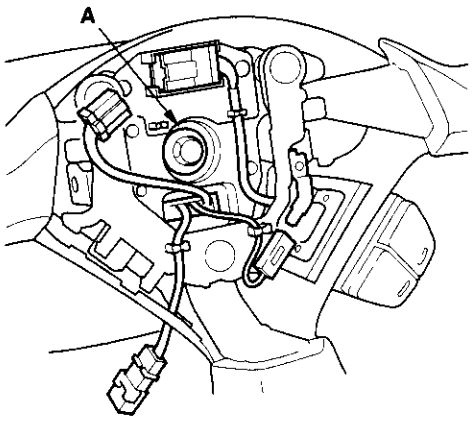


9. Connect the cruise control switch connector.
10. Install the driver's airbag (see page 23-66).
11. Reconnect the battery negative cable.
12. After installing the cable reel, confirm proper system operation:

    - Turn the ignition switch ON (II); the SRS indicator should come on for about 6 seconds and then go off.
    - After the SRS indicator has turned off, turn the steering wheel fully left and right to confirm the indicator does not come on.
    - Make sure the horn works.

## SRS Unit Replacement

### Removal

1. Disconnect the battery negative cable, and wait at least 3 minutes before beginning work.
2. Disconnect the airbag connectors and seat belt tensioner connectors (see page 23-16).
3. Remove the center console (see page 20-76) and audio unit (see page 22-89).
4. Disconnect the SRS unit 18P connector (A) from the SRS unit (B).

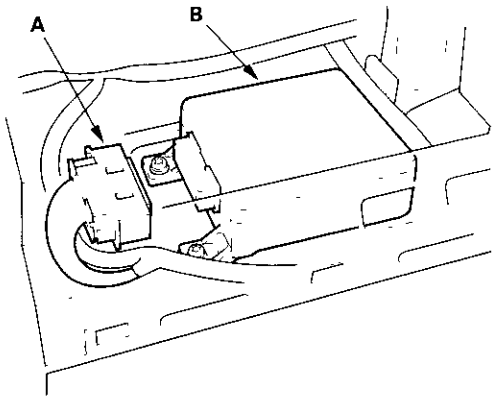


5. Remove the three Torx bolts (A) from the SRS unit, then pull out the SRS unit from the bracket.

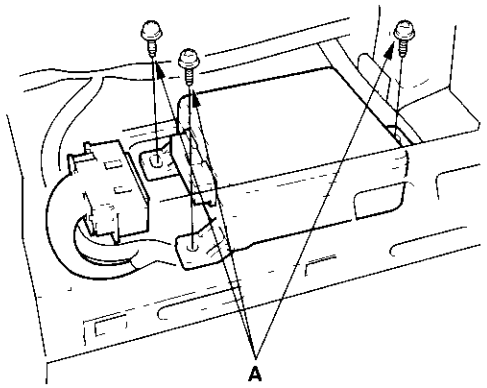


### Installation

1. Install the new SRS unit (A) with Torx bolts (B), then connect the SRS unit 18P connector (C) to the SRS unit; push it into position until it clicks.

   NOTE: When tightening the Torx bolts to the specified torque after replacement, be careful to turn them in so that their heads rest squarely on the brackets.

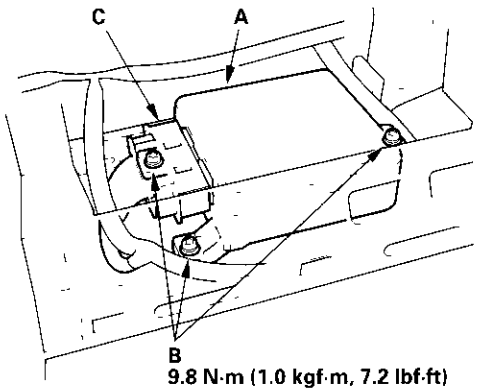


**9.8 N·m (1.0 kgf·m, 7.2 lbf·ft)**

2. Reinstall the center console (see page 20-76) and audio unit (see page 22-89).
3. Reconnect the airbag connectors and seat belt tensioner connectors (see page 23-16).
4. Reconnect the battery negative cable.
5. After installing the SRS unit, confirm proper system operation: Turn the ignition switch ON (II); the SRS indicator should come on for about 6 seconds and then go OFF.