4 CT 200h

(Cont. next page)

Multiplex Communication System (Body Control LHD)

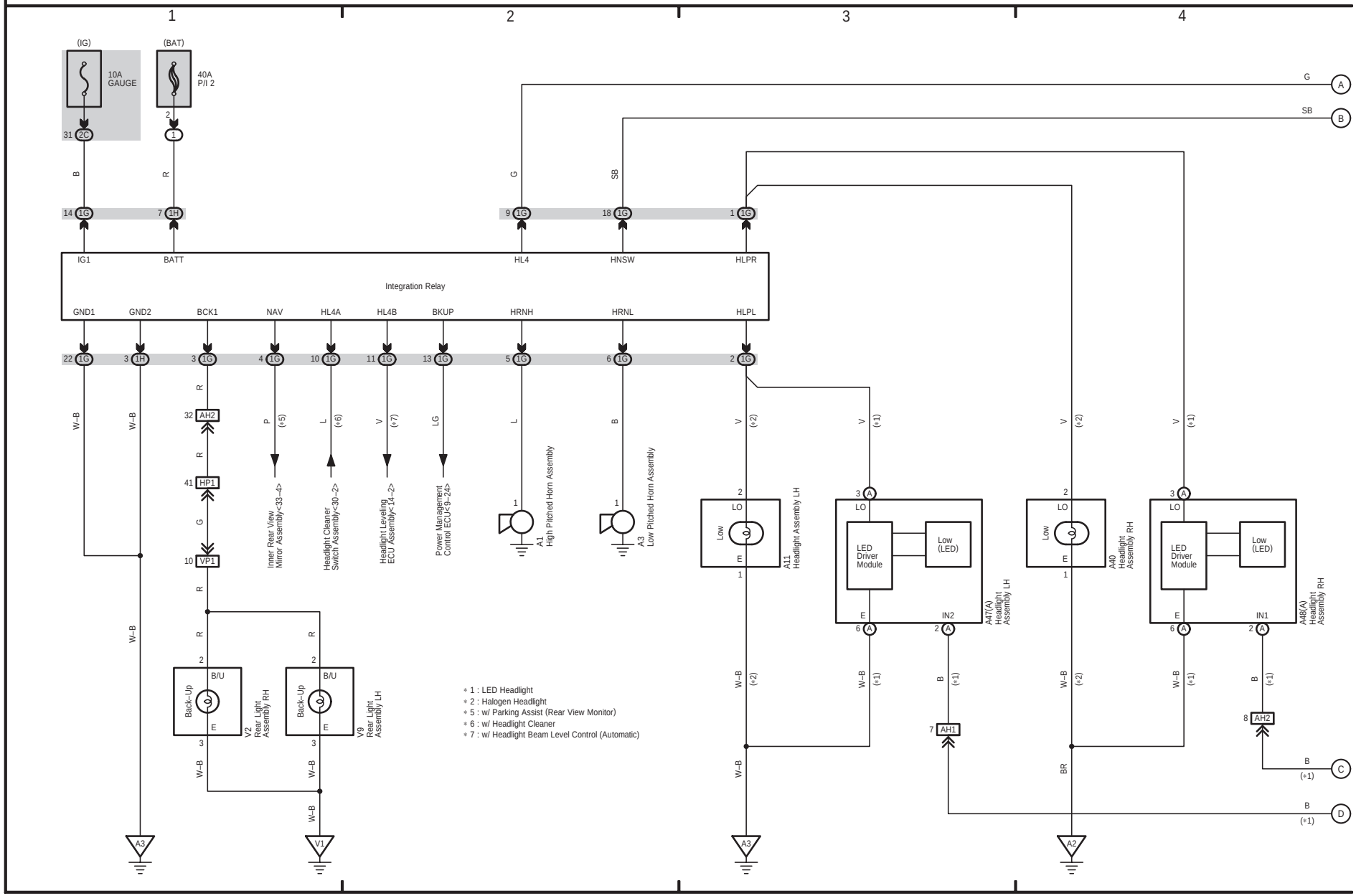

(Cont. next page)

Multiplex Communication System (Body Control LHD)

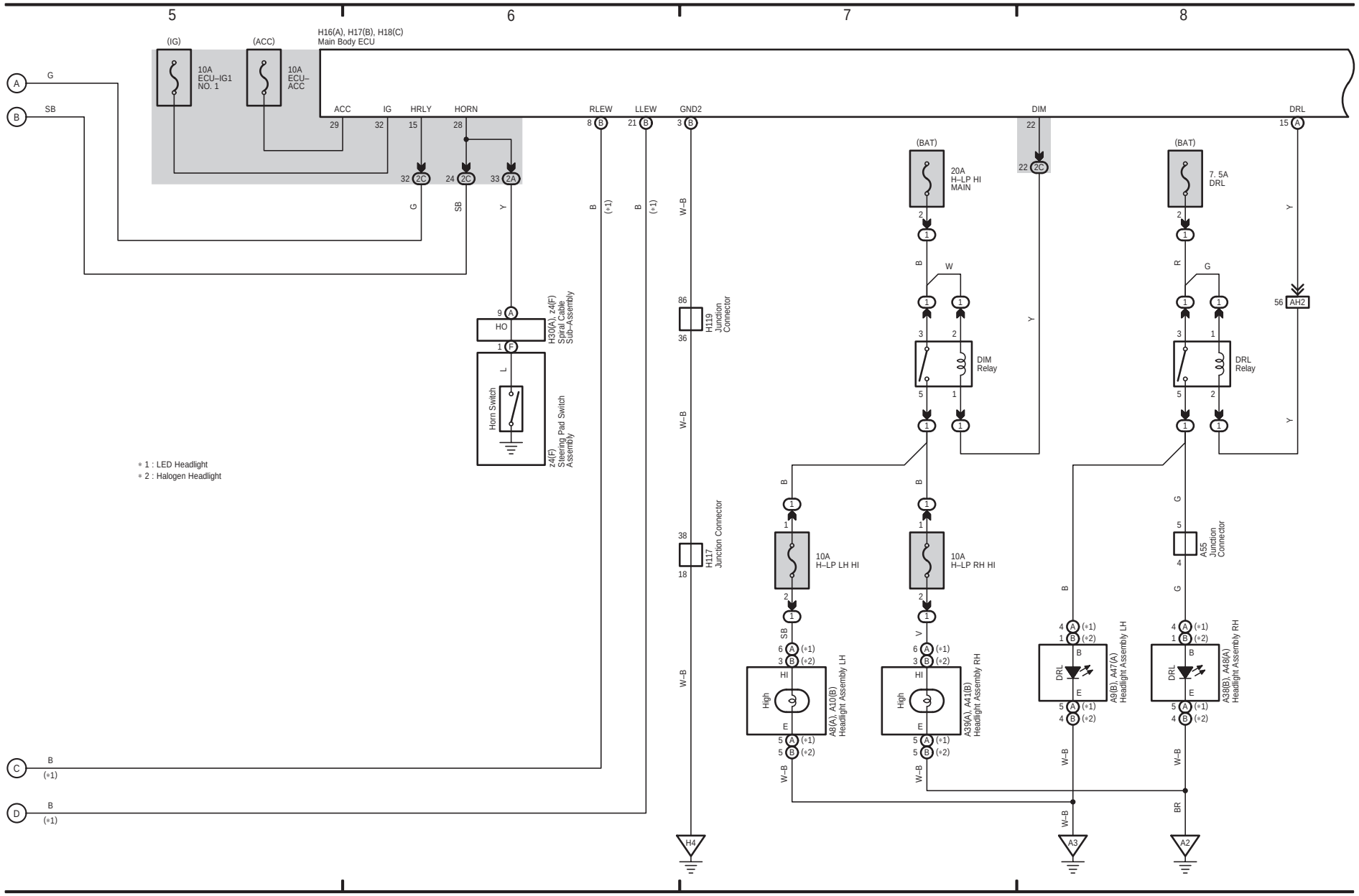

4 CT 200h (Cont' d)

(Cont. next page)

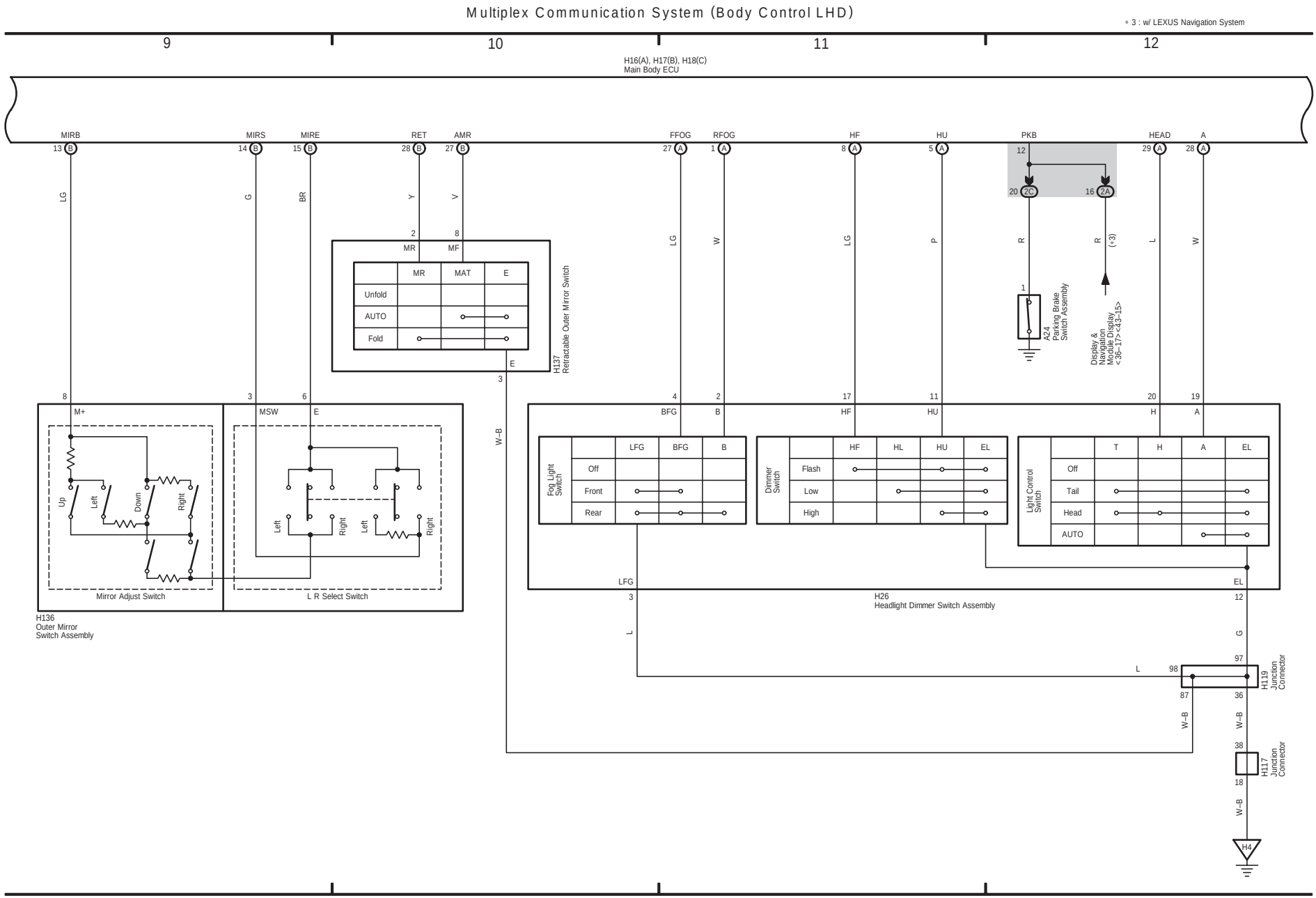

(Cont. next page)

Multiplex Communication System (Body Control LHD)

*11 : w/ Inclination Warning System

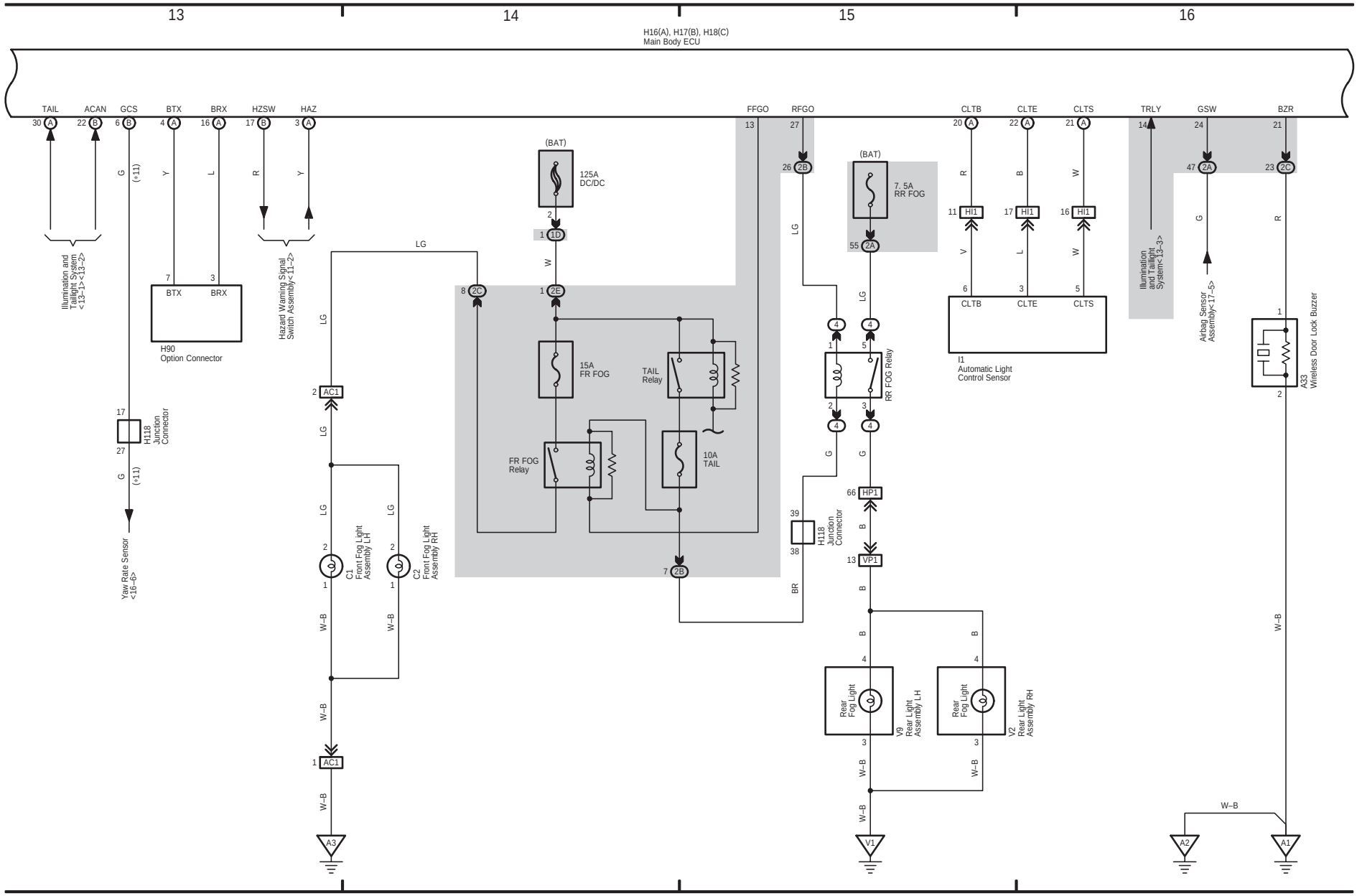

4 CT 200h (Cont' d)

(Cont. next page)

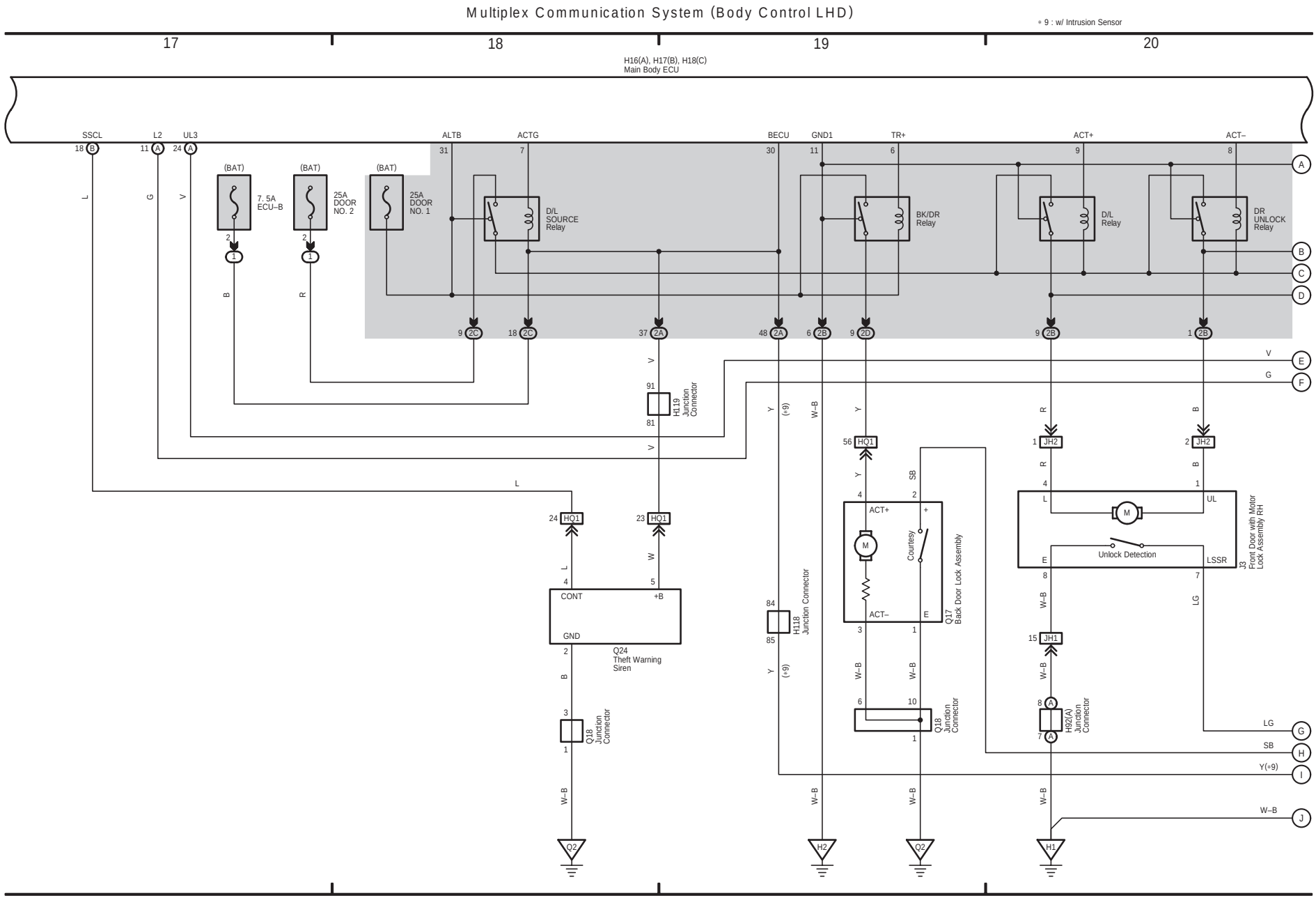

(Cont. next page)

Multiplex Communication System (Body Control LHD)

∗ 8 : w/o Entry Function
∗ 9 : w/ Intrusion Sensor

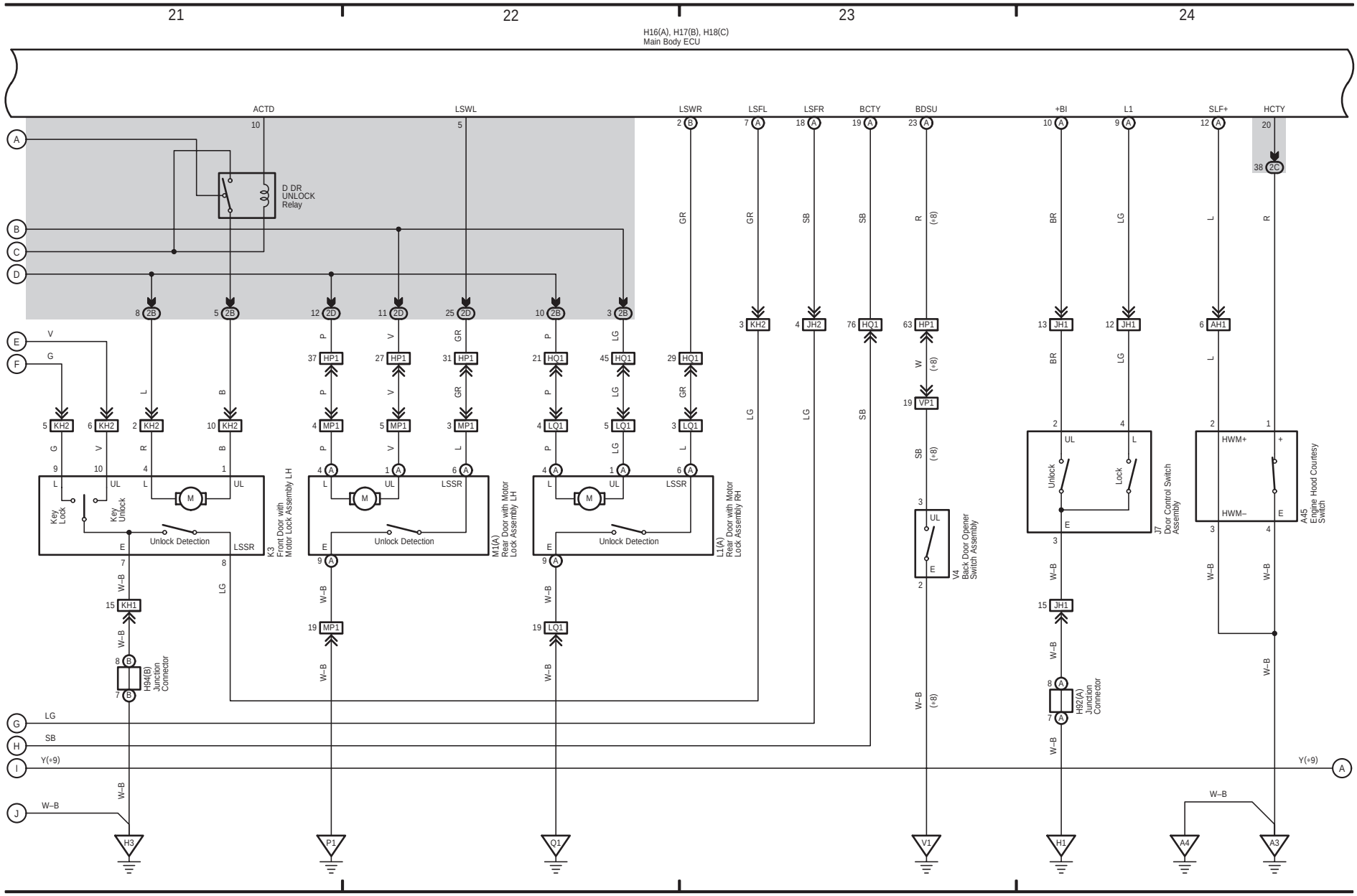

4 CT 200h (Cont' d)

(Cont. next page)

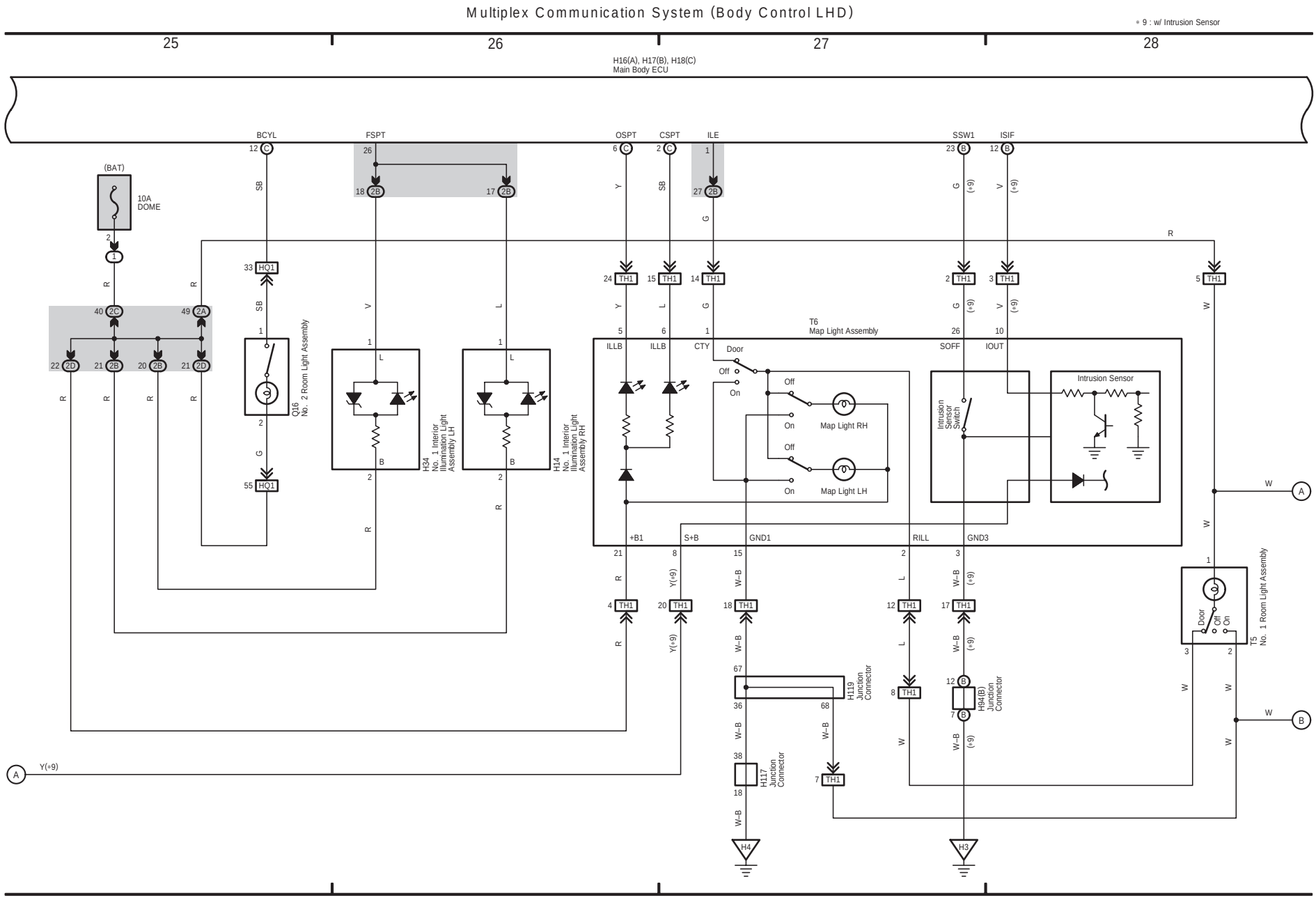

(Cont. next page)

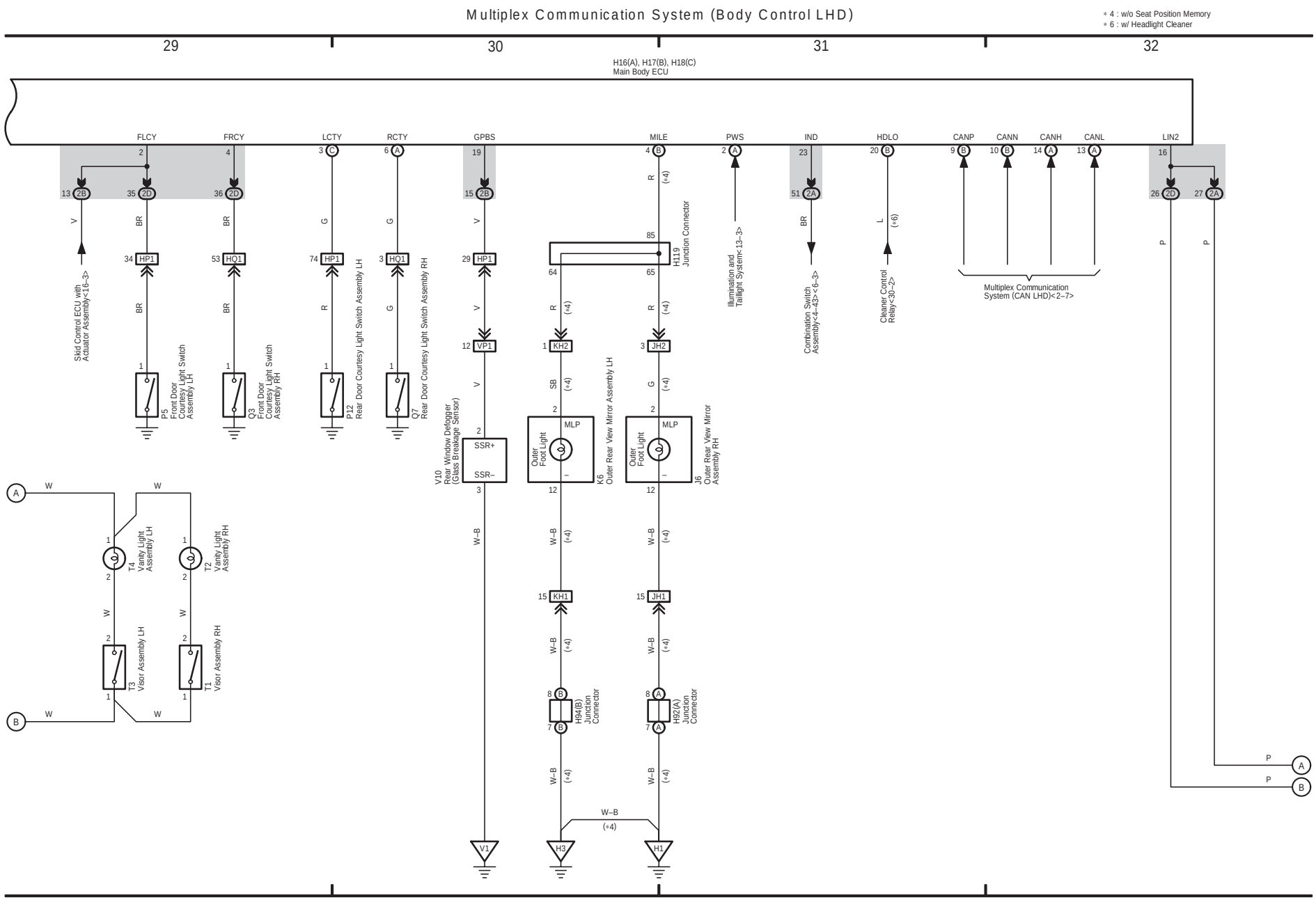

4 CT 200h (Cont' d)

(Cont. next page)

Multiplex Communication System (Body Control LHD)

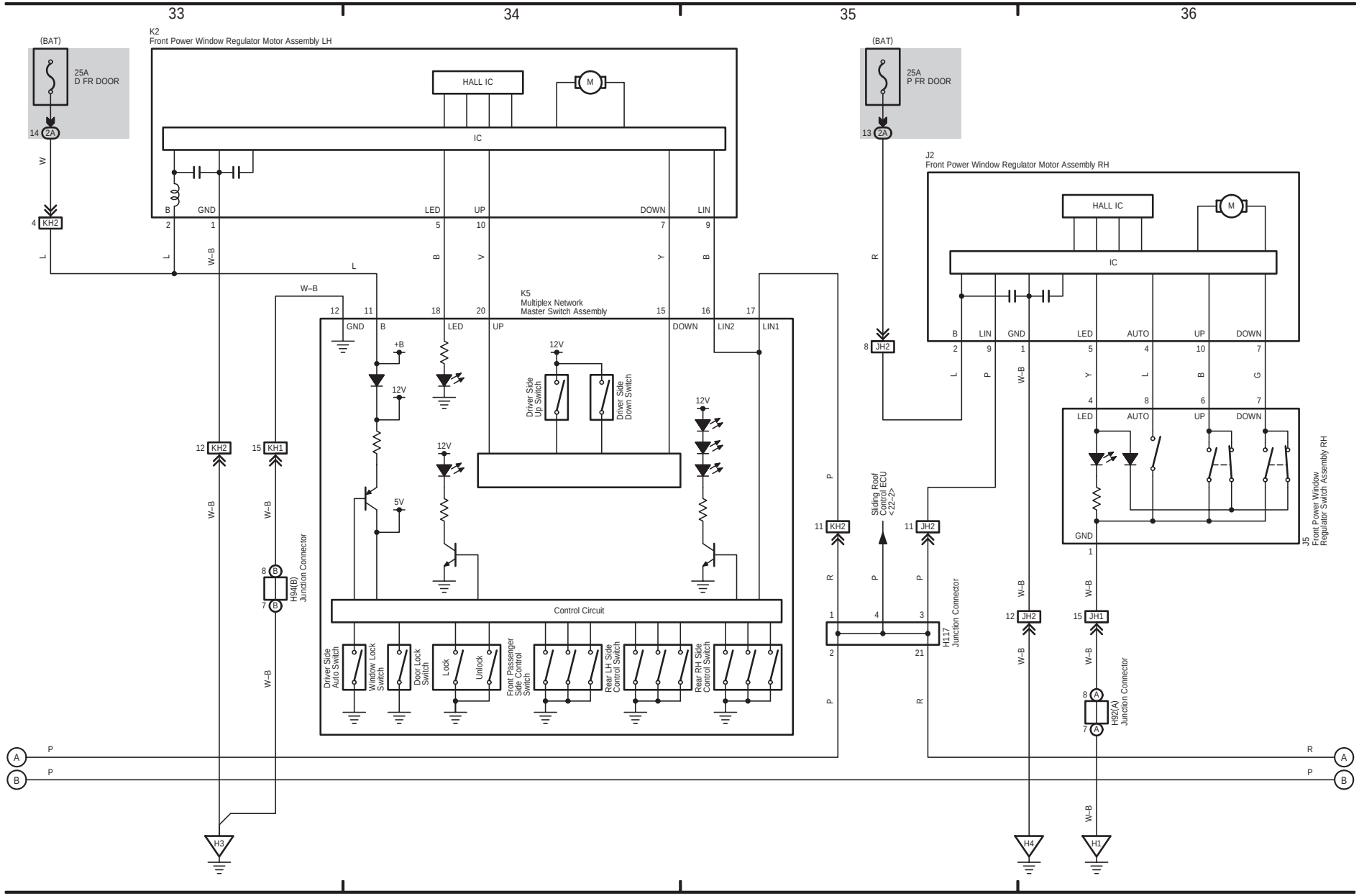

(Cont. next page)

Multiplex Communication System (Body Control LHD)

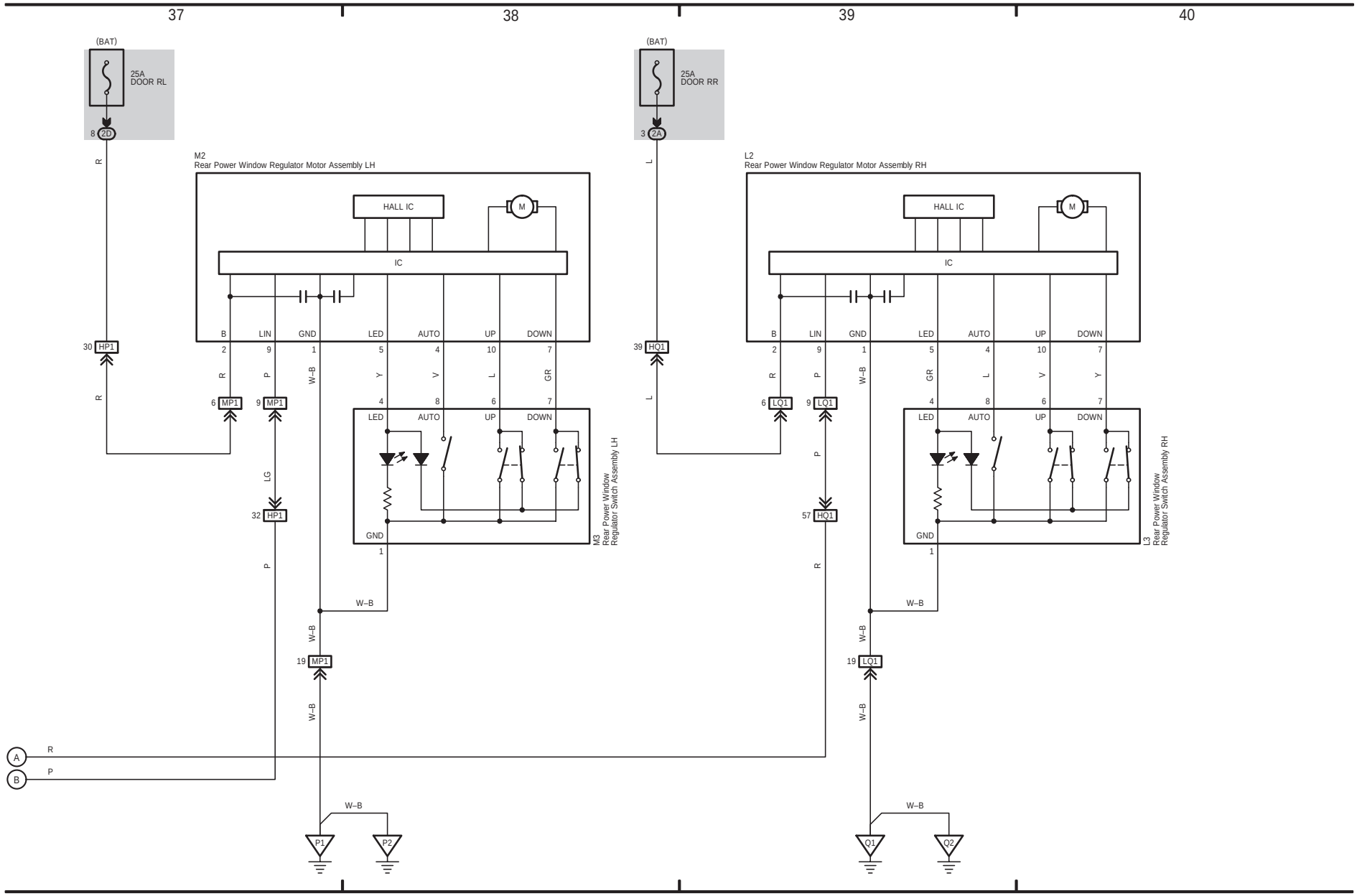

4 CT 200h (Cont' d)

(Cont. next page)

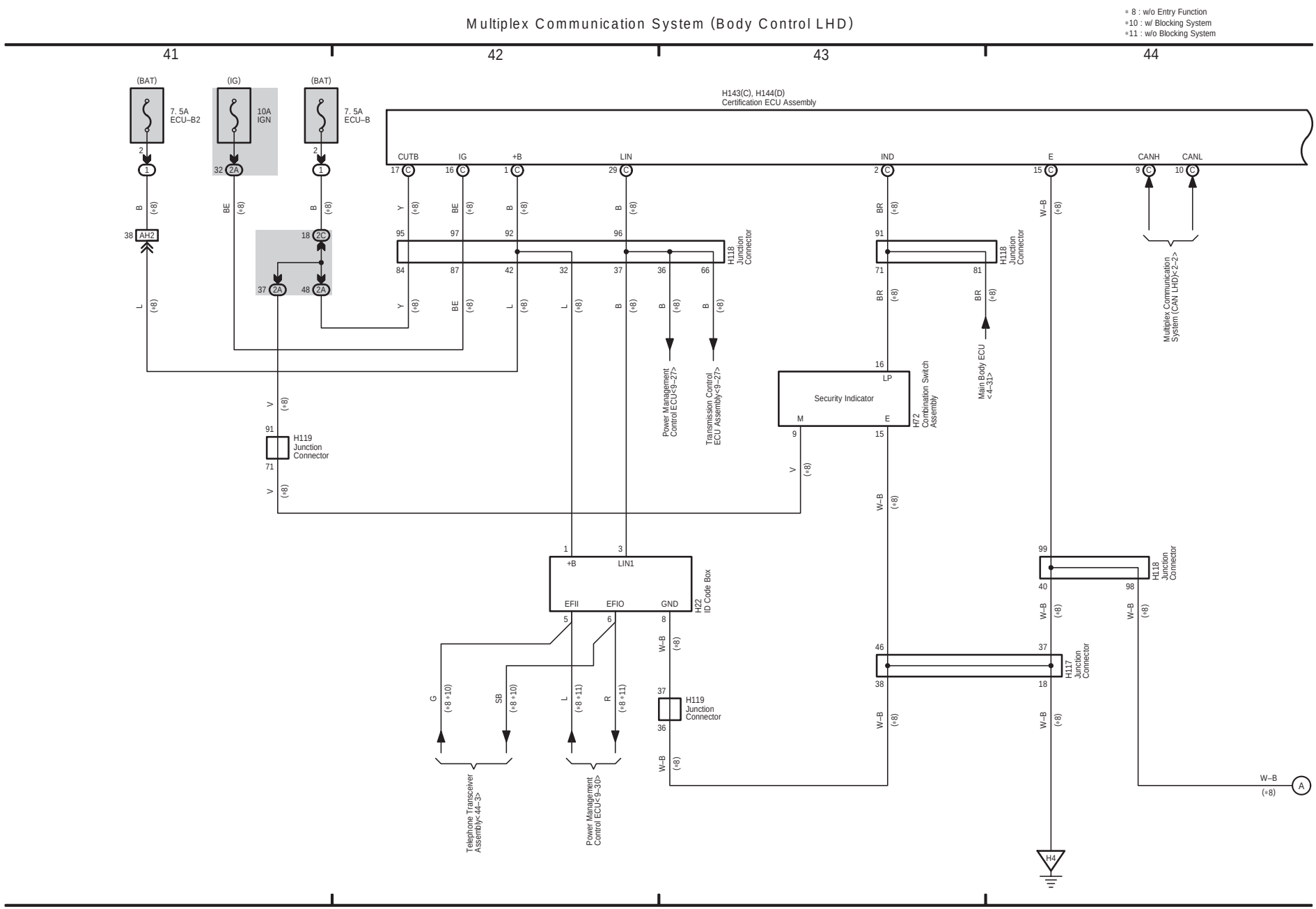

(Cont. next page)

Multiplex Communication System (Body Control LHD)

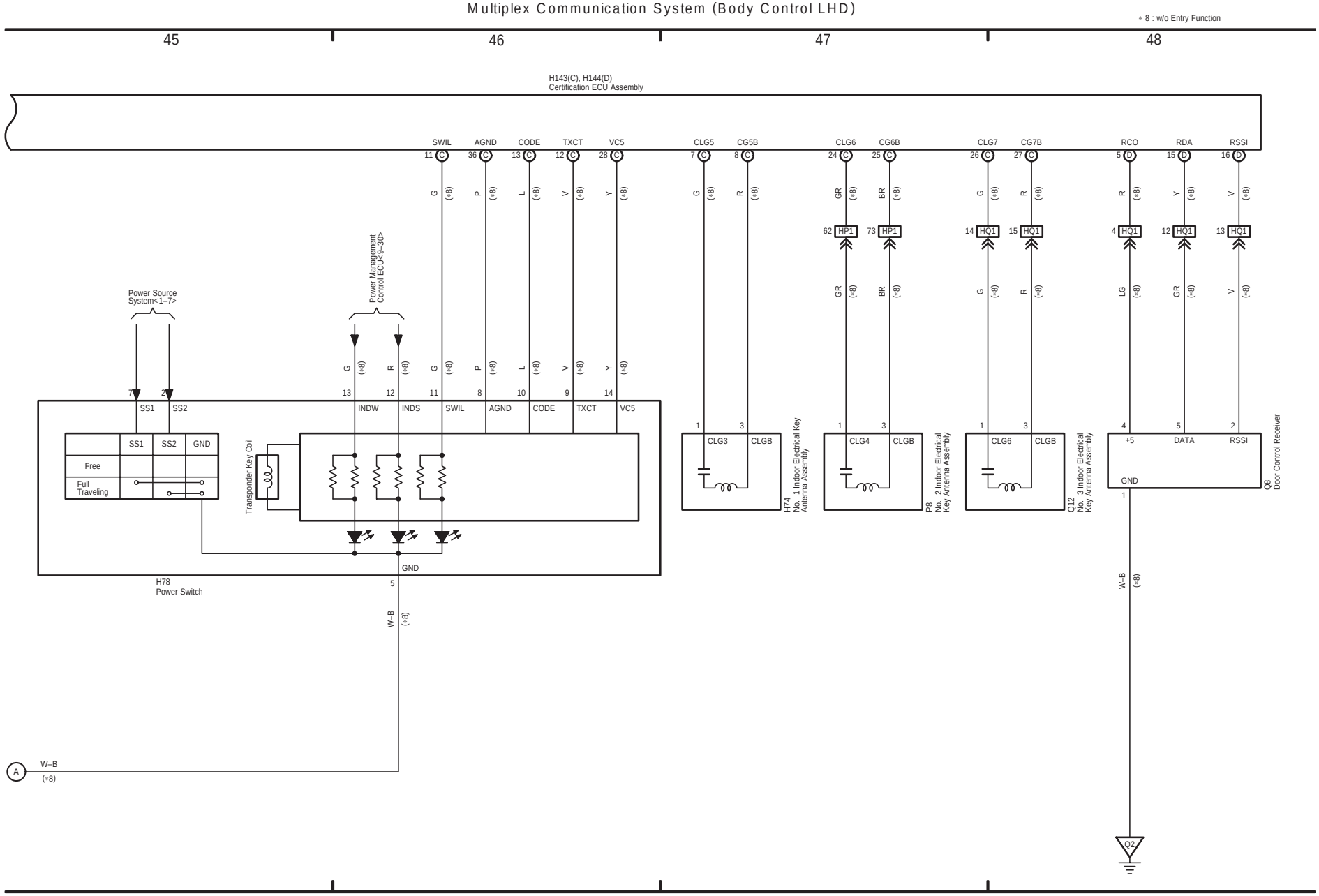

4 CT 200h (Cont' d)
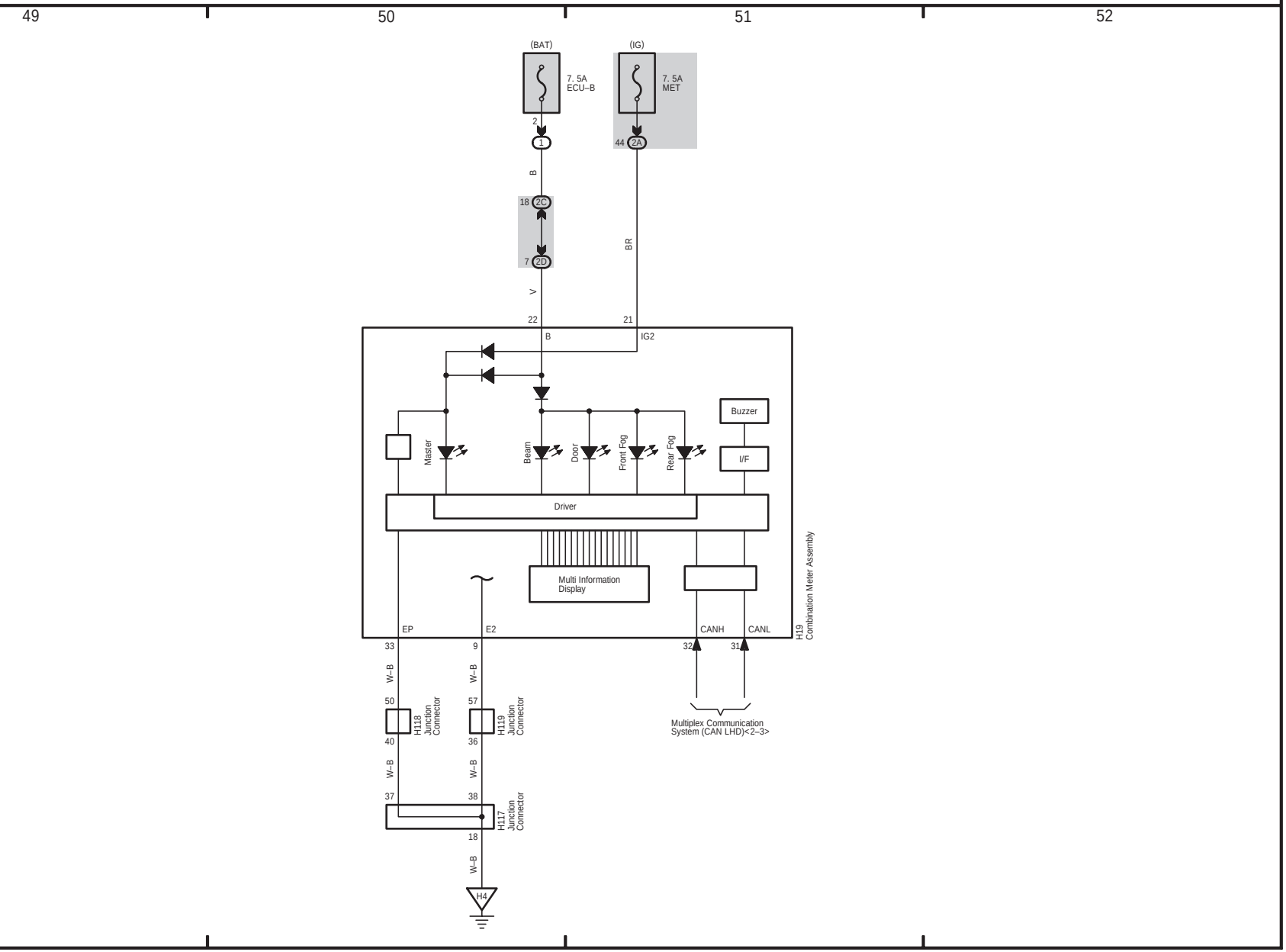
Multiplex Communication System (Body Control LHD)