5 CT 200h

(Cont. next page)

Multiplex Communication System (Body Control RHD)

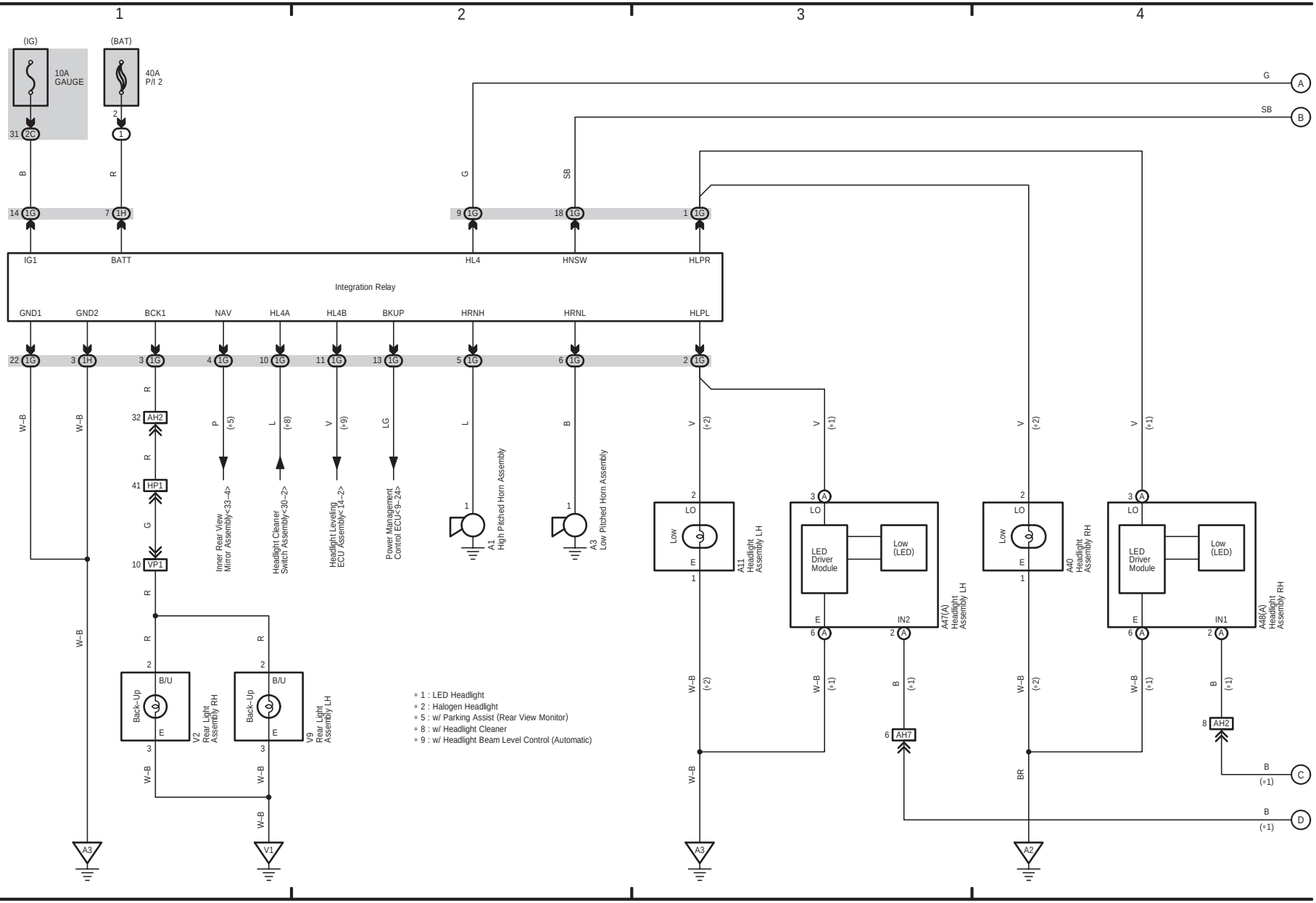

(Cont. next page)

Multiplex Communication System (Body Control RHD)

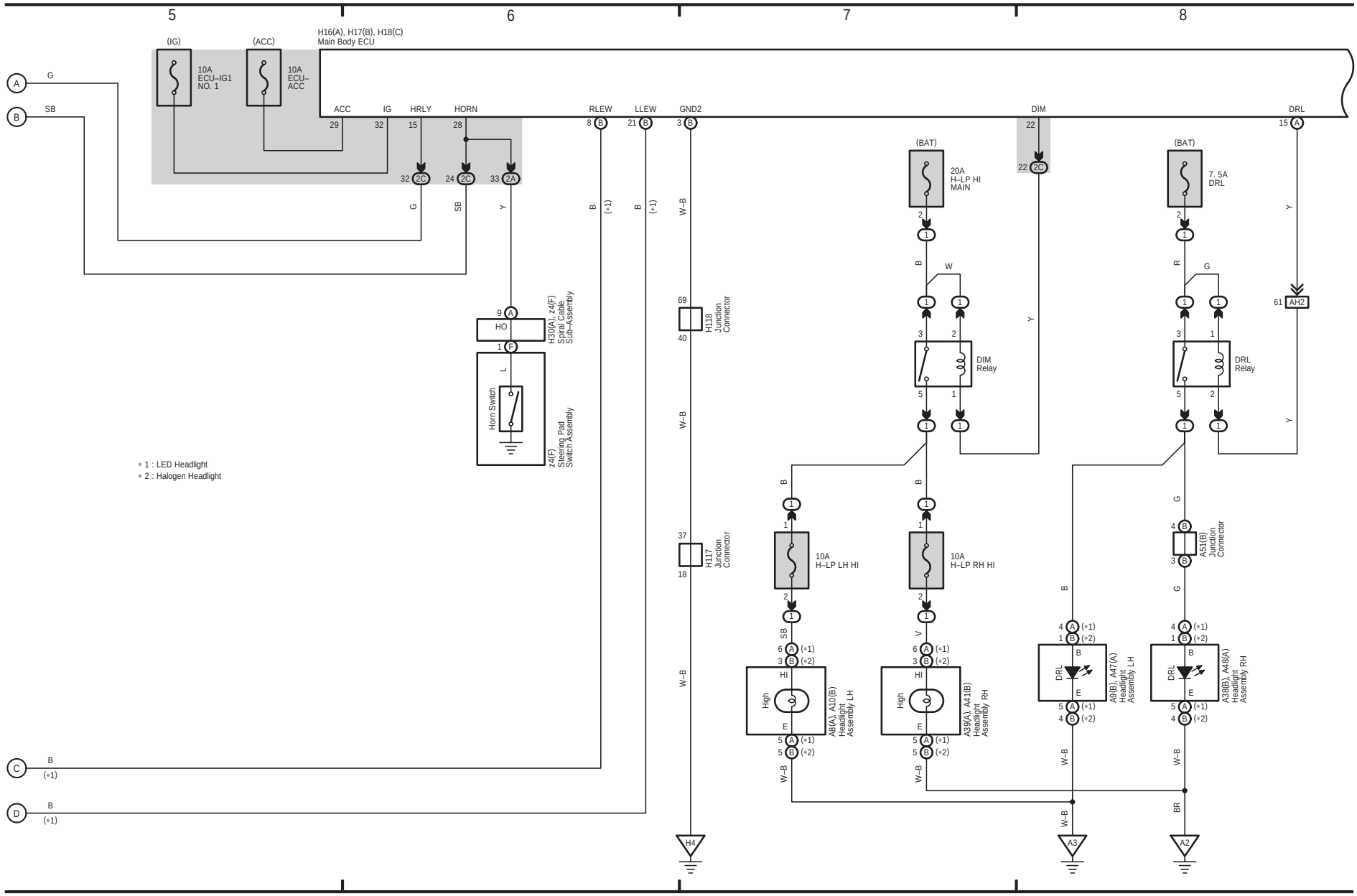

5 CT 200h (Cont' d)

(Cont. next page)

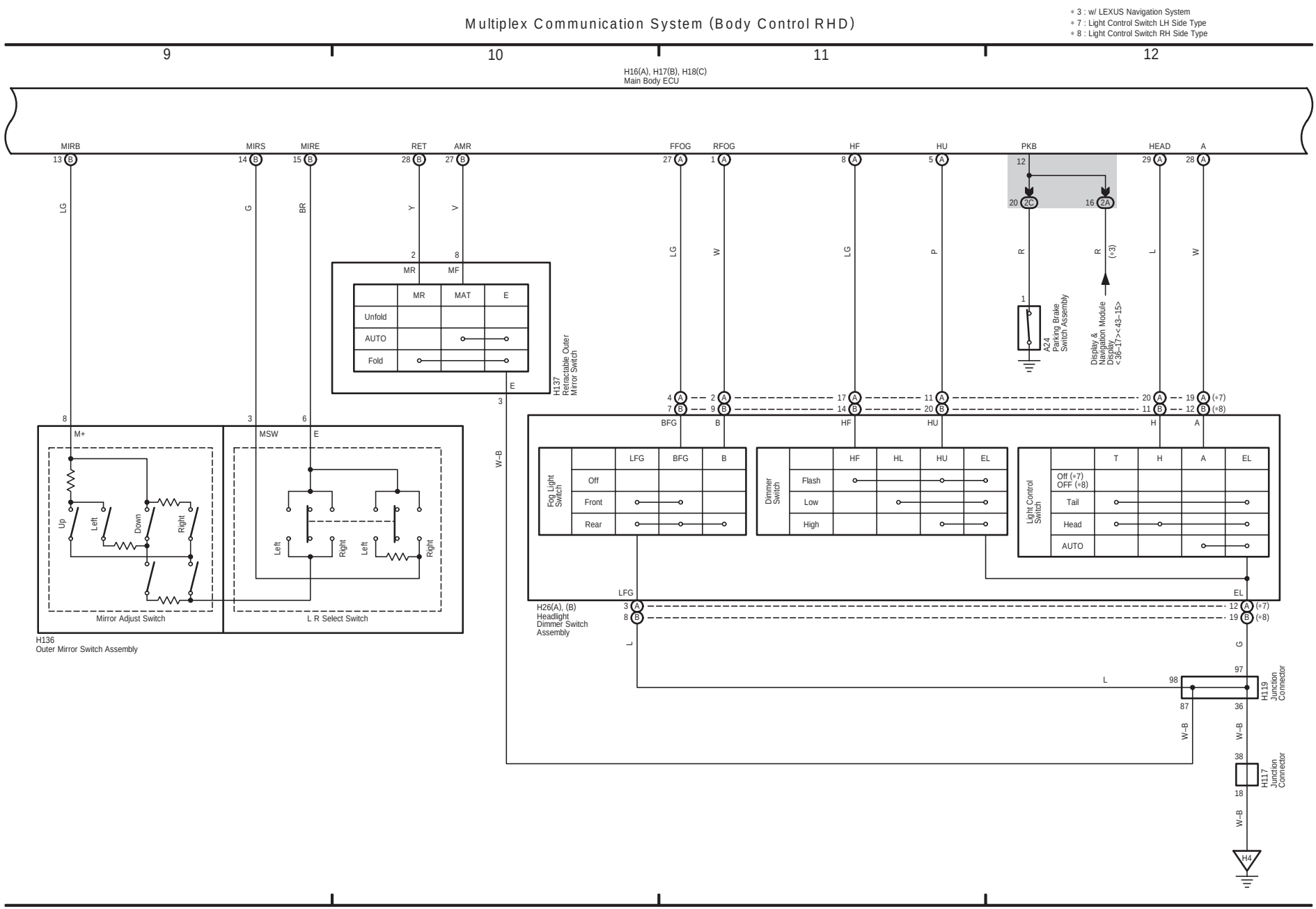

(Cont. next page)

Multiplex Communication System (Body Control RHD)

*11 : w/ Inclination Warning System

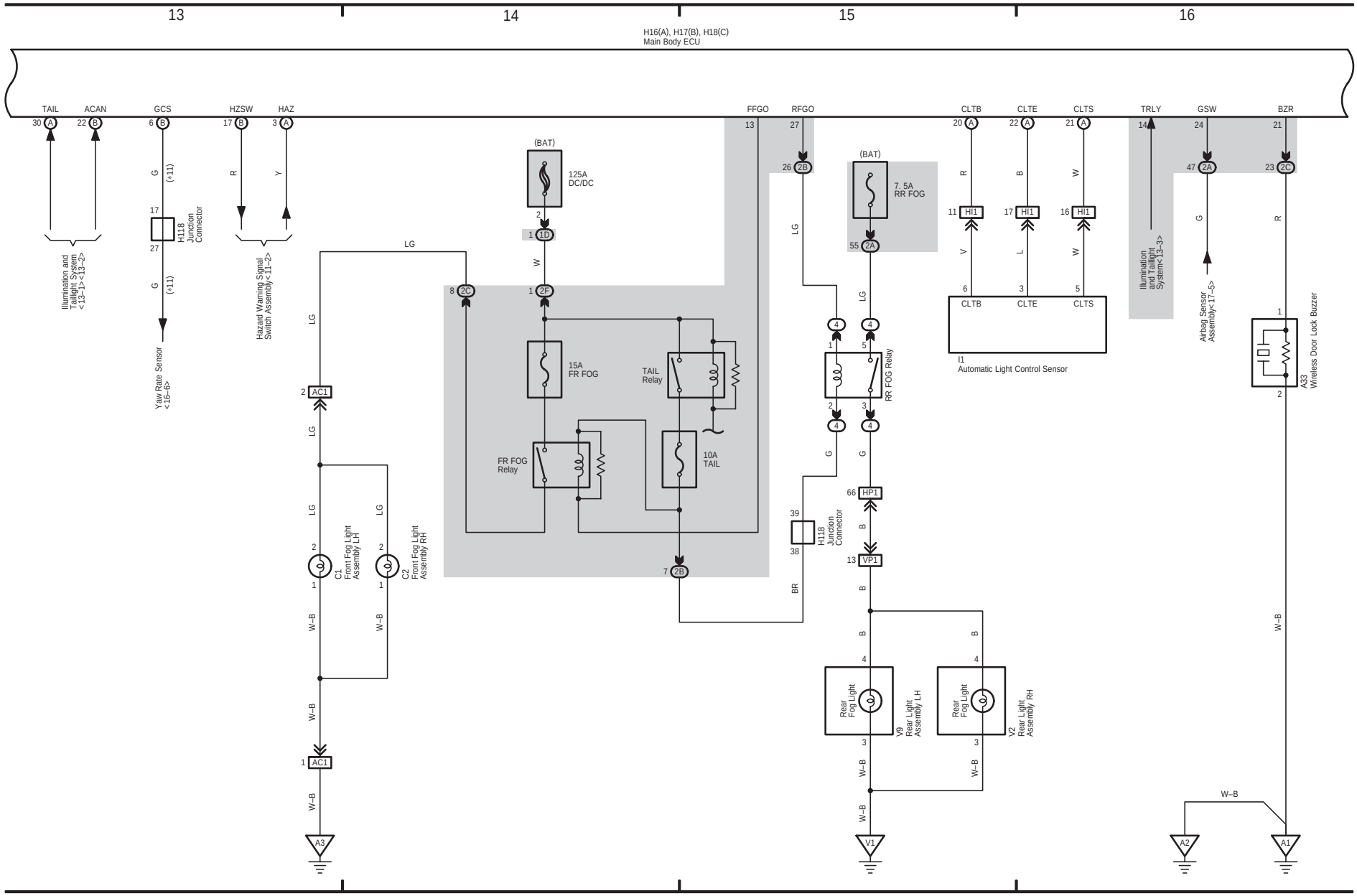

5 CT 200h (Cont' d)

(Cont. next page)

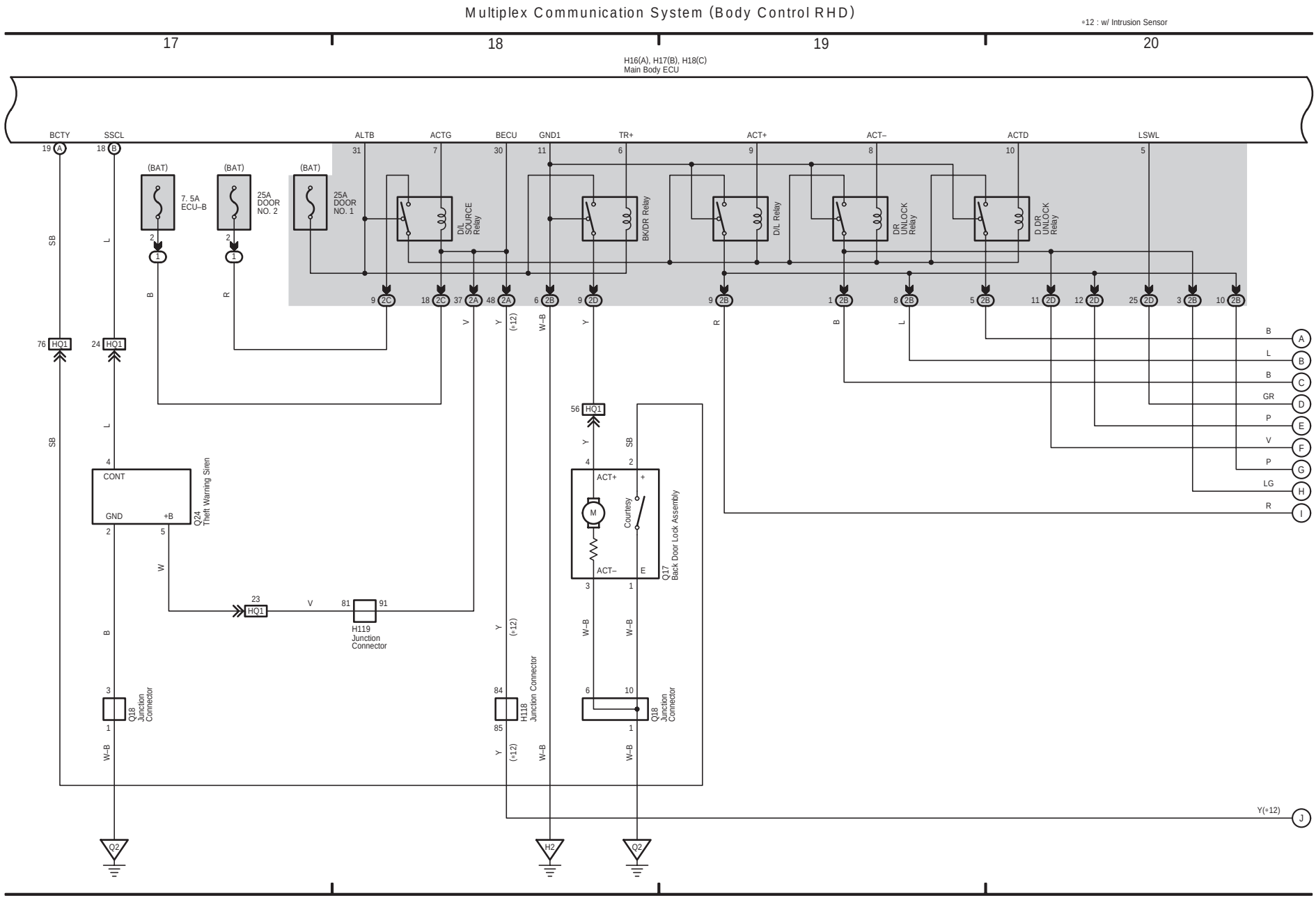

(Cont. next page)

Multiplex Communication System (Body Control RHD)

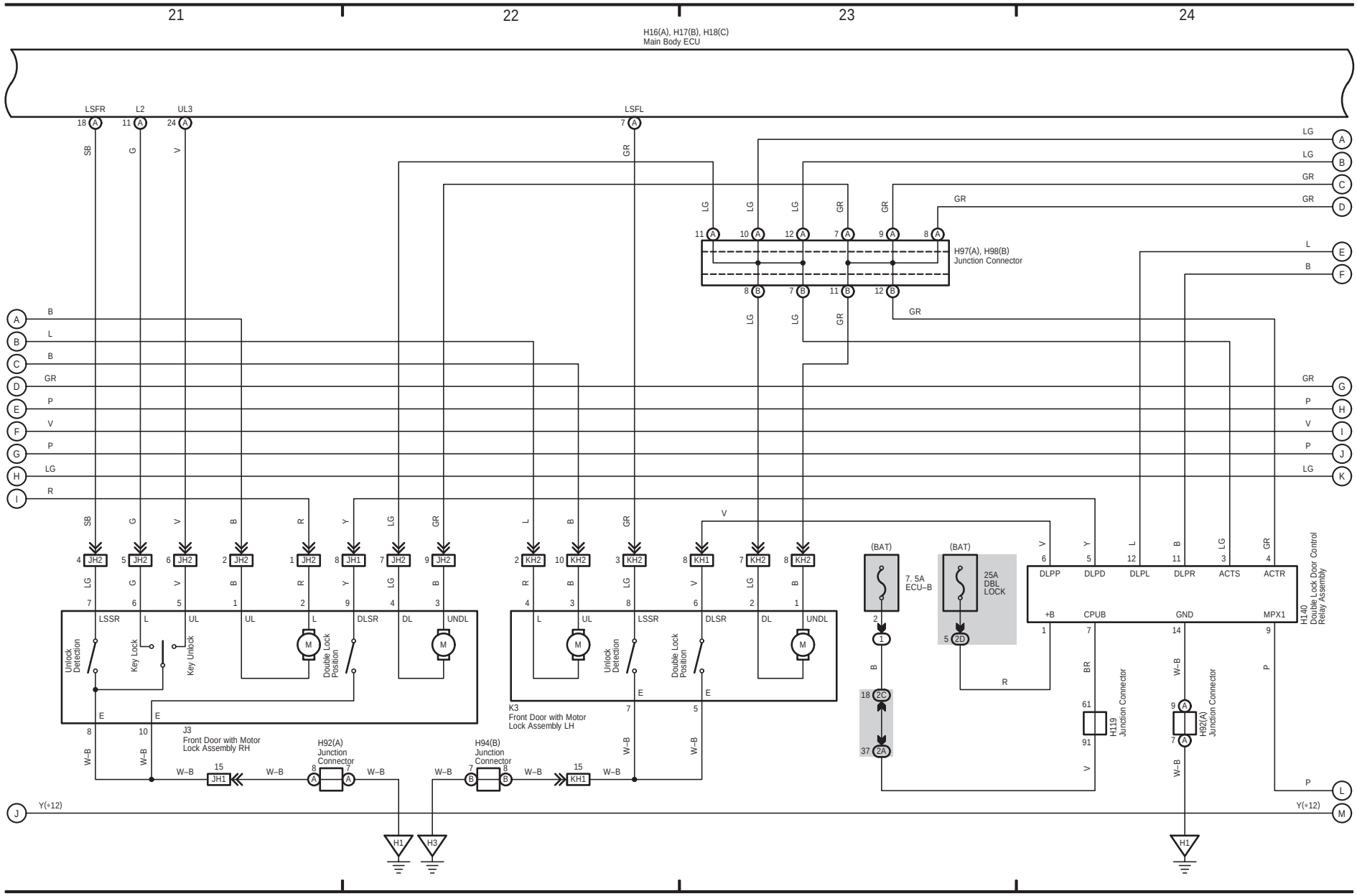

5 CT 200h (Cont' d)

(Cont. next page)

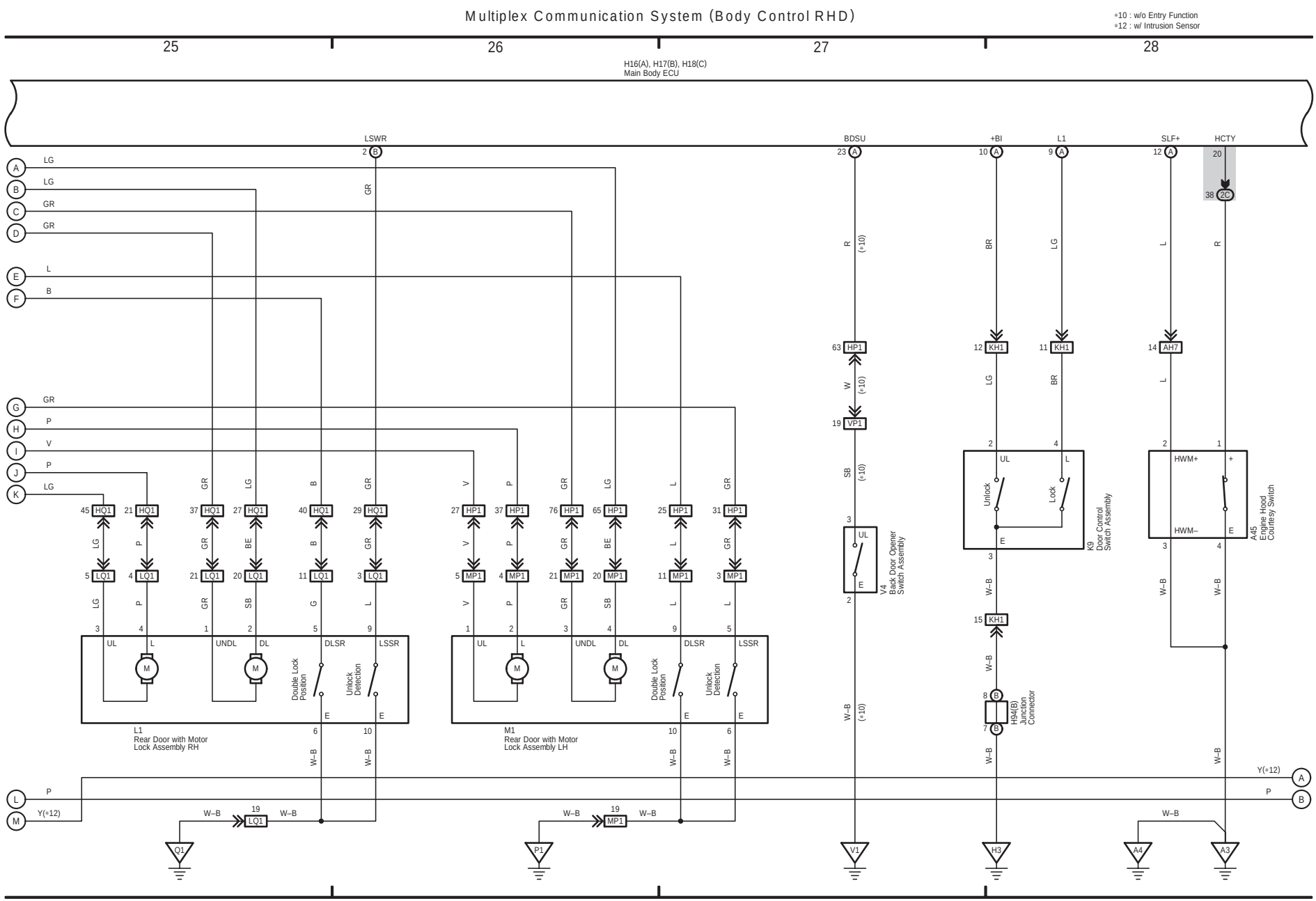

(Cont. next page)

Multiplex Communication System (Body Control RHD)

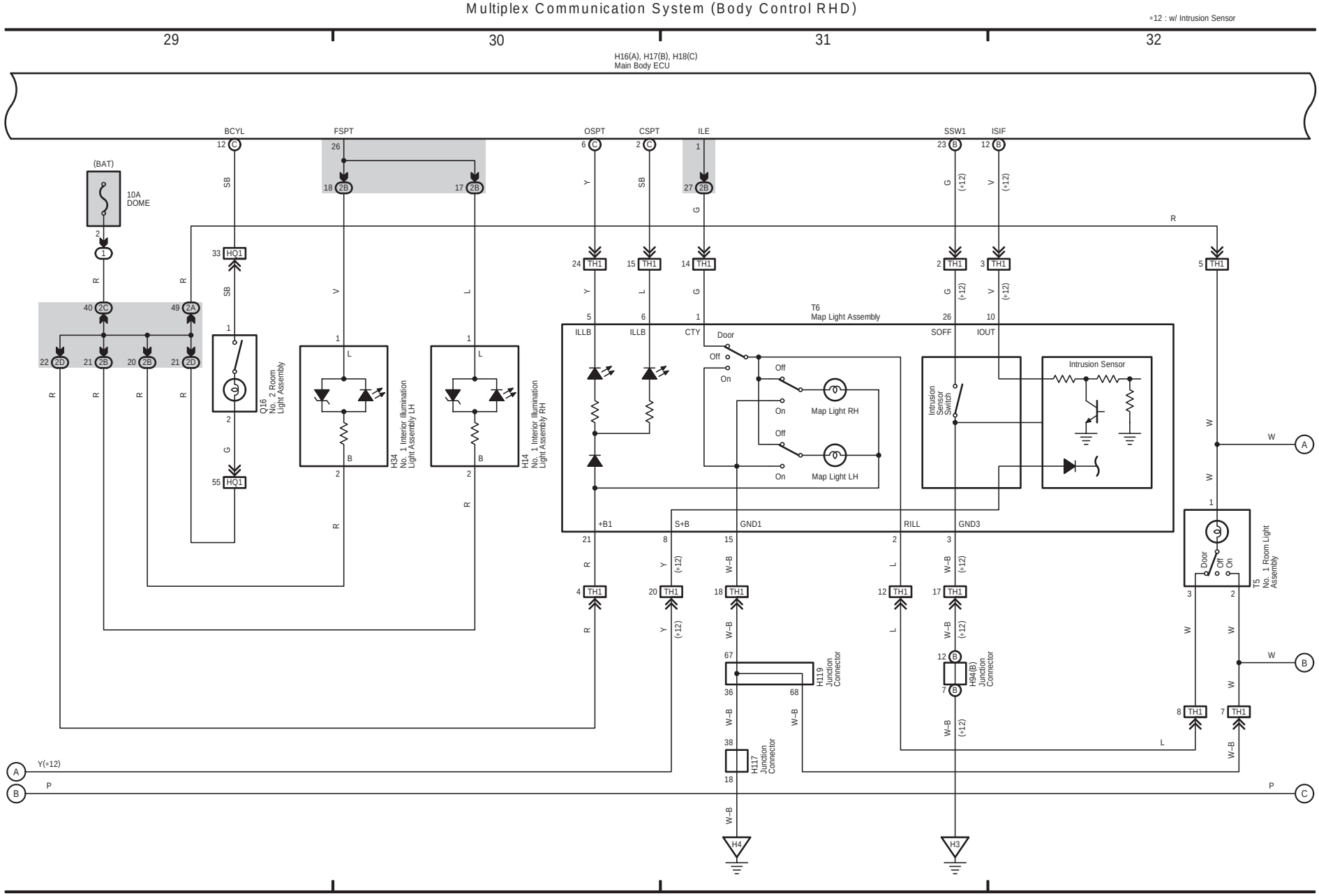

5 CT 200h (Cont' d)

(Cont. next page)

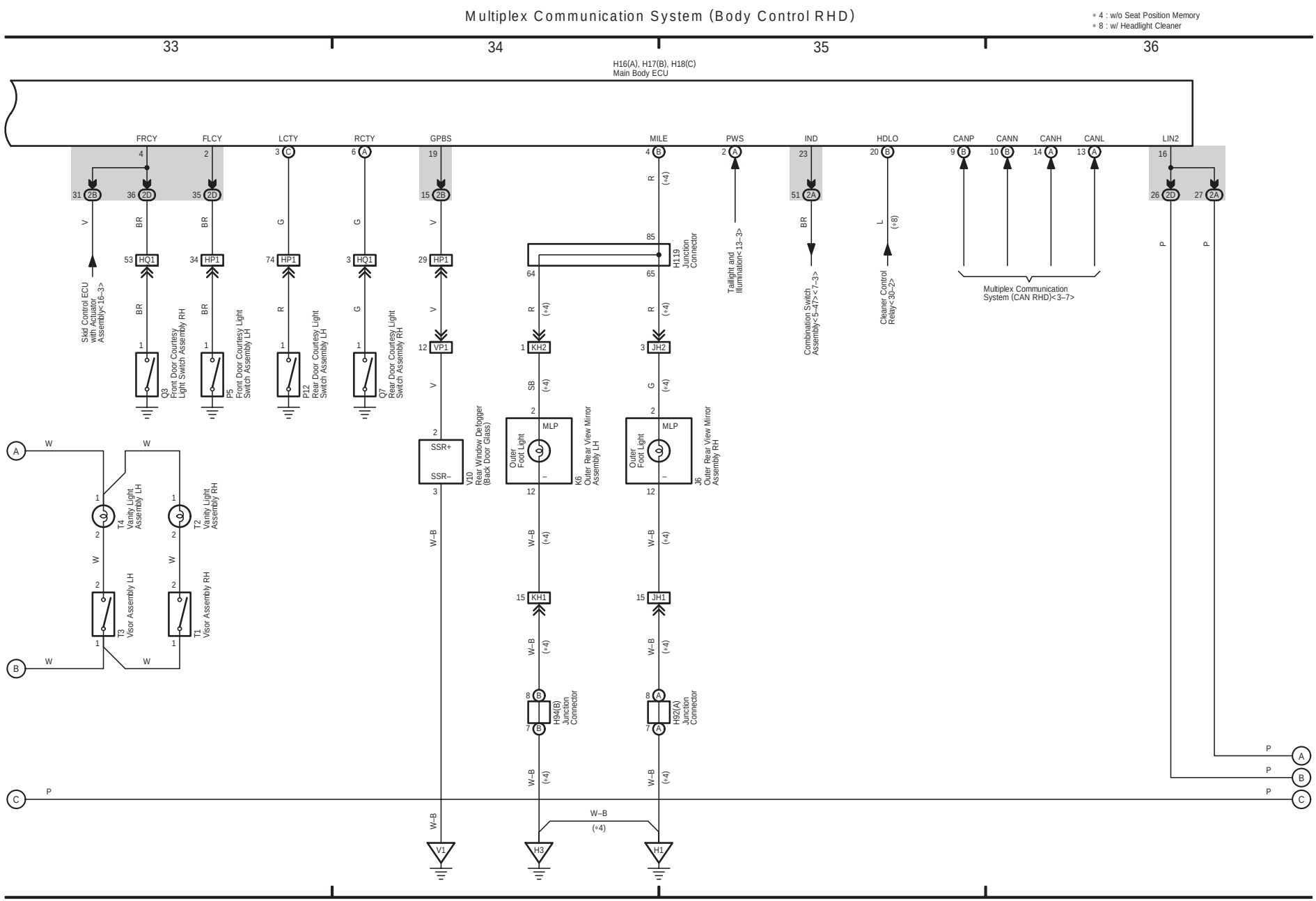

(Cont. next page)

Multiplex Communication System (Body Control RHD)

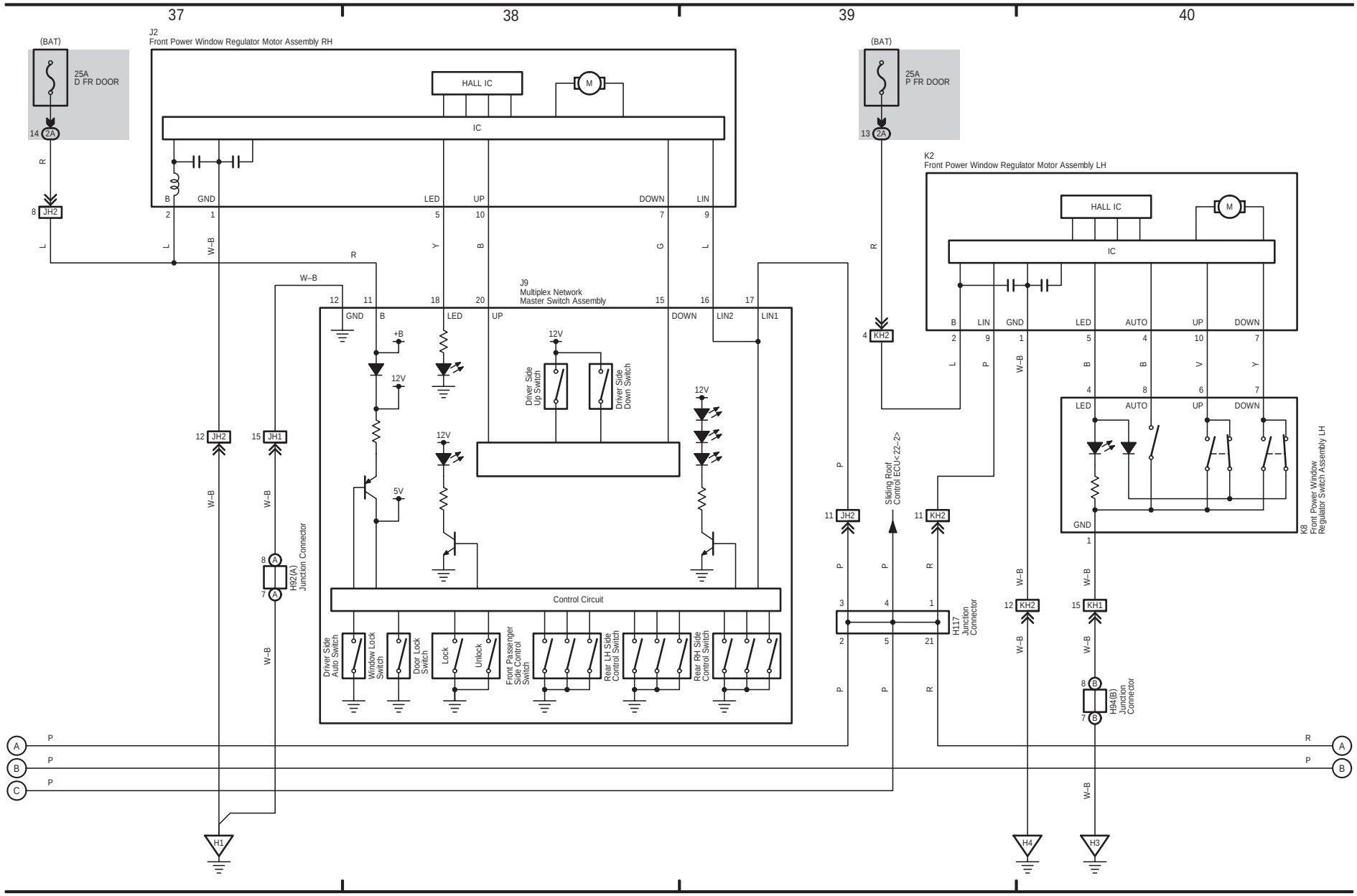

5 CT 200h (Cont' d)

(Cont. next page)

Multiplex Communication System (Body Control RHD)

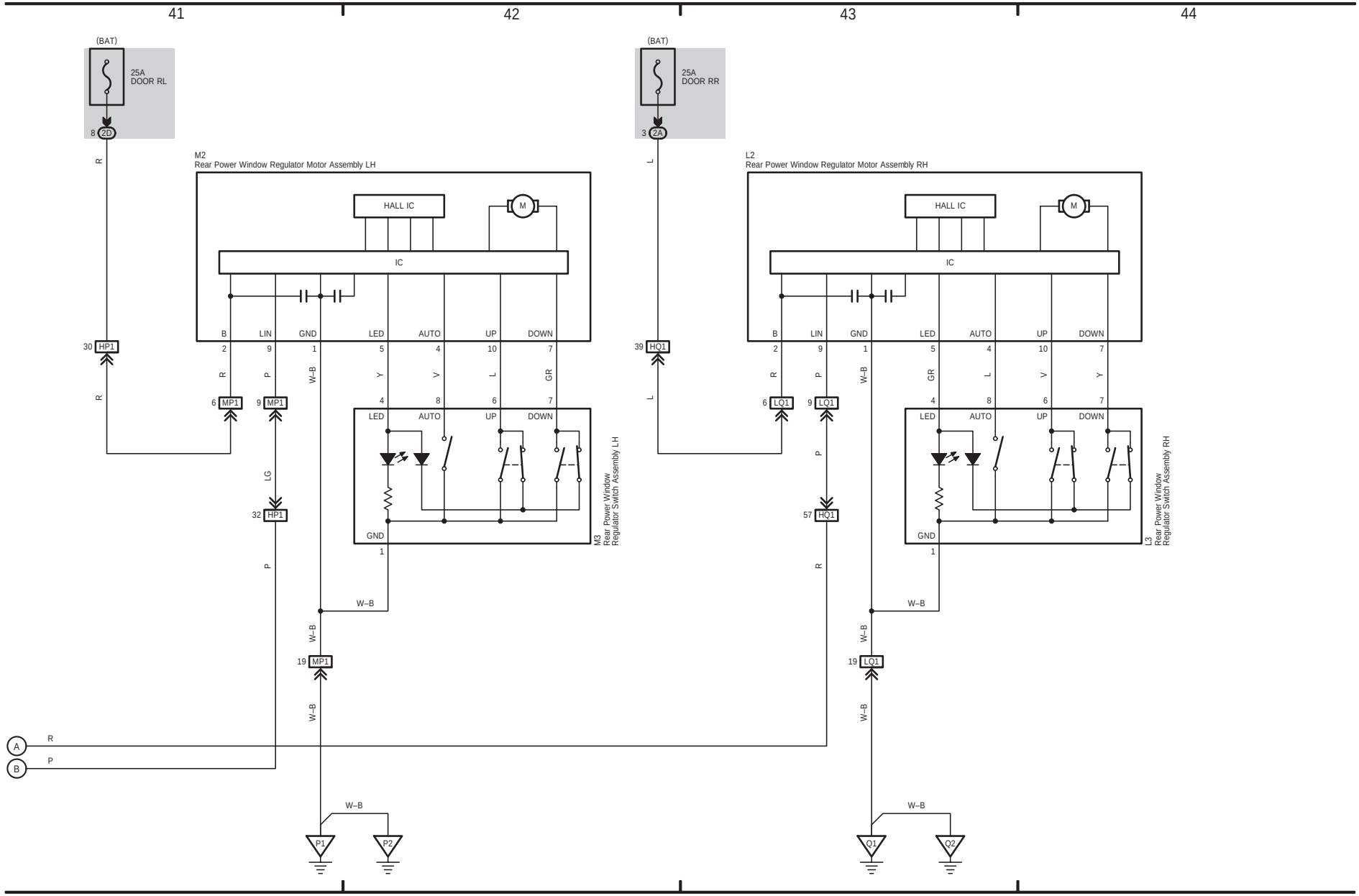

(Cont. next page)

Multiplex Communication System (Body Control RHD)

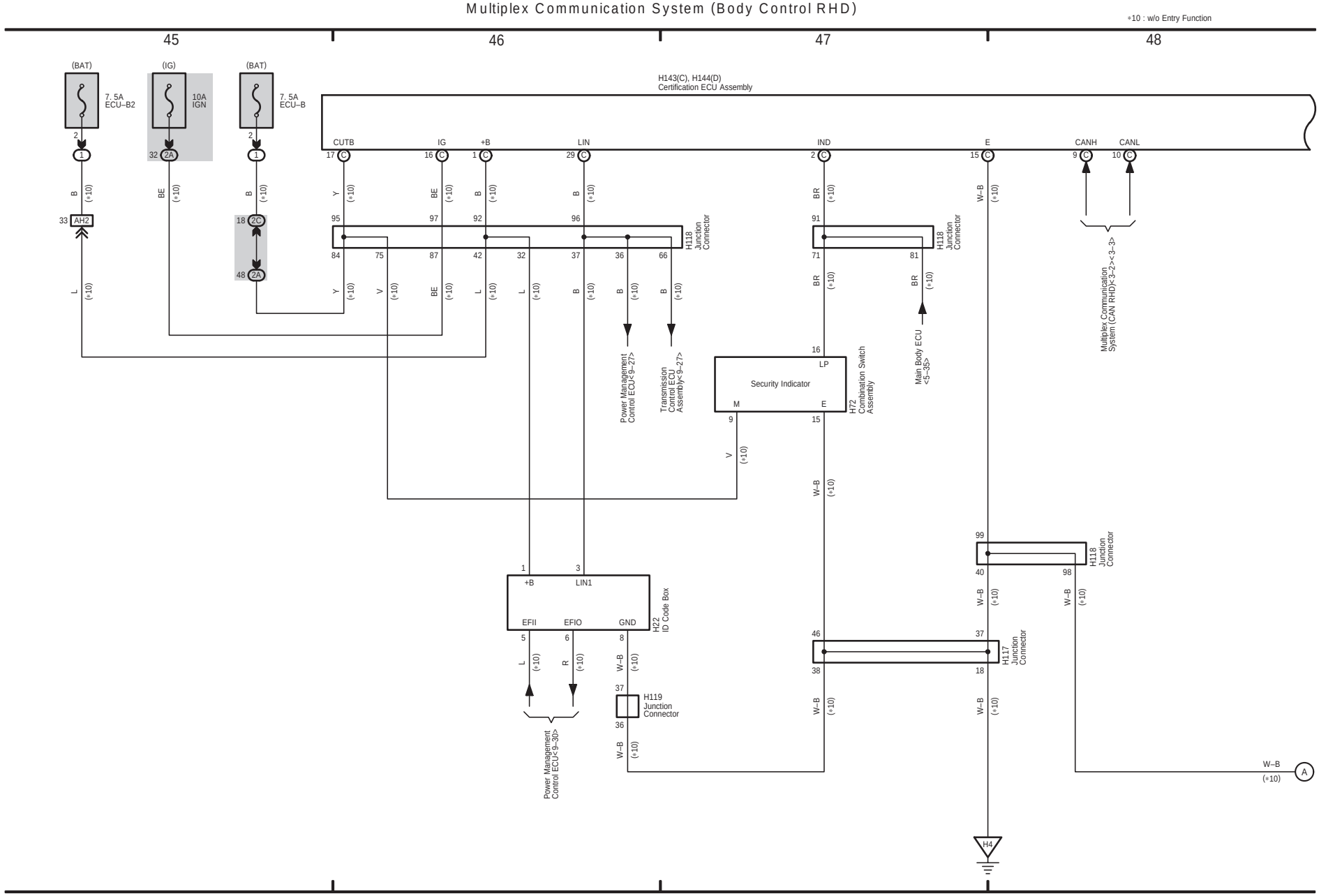

5 CT 200h (Cont' d)

(Cont. next page)

Multiplex Communication System (Body Control RHD)

*10 : w/o Entry Function

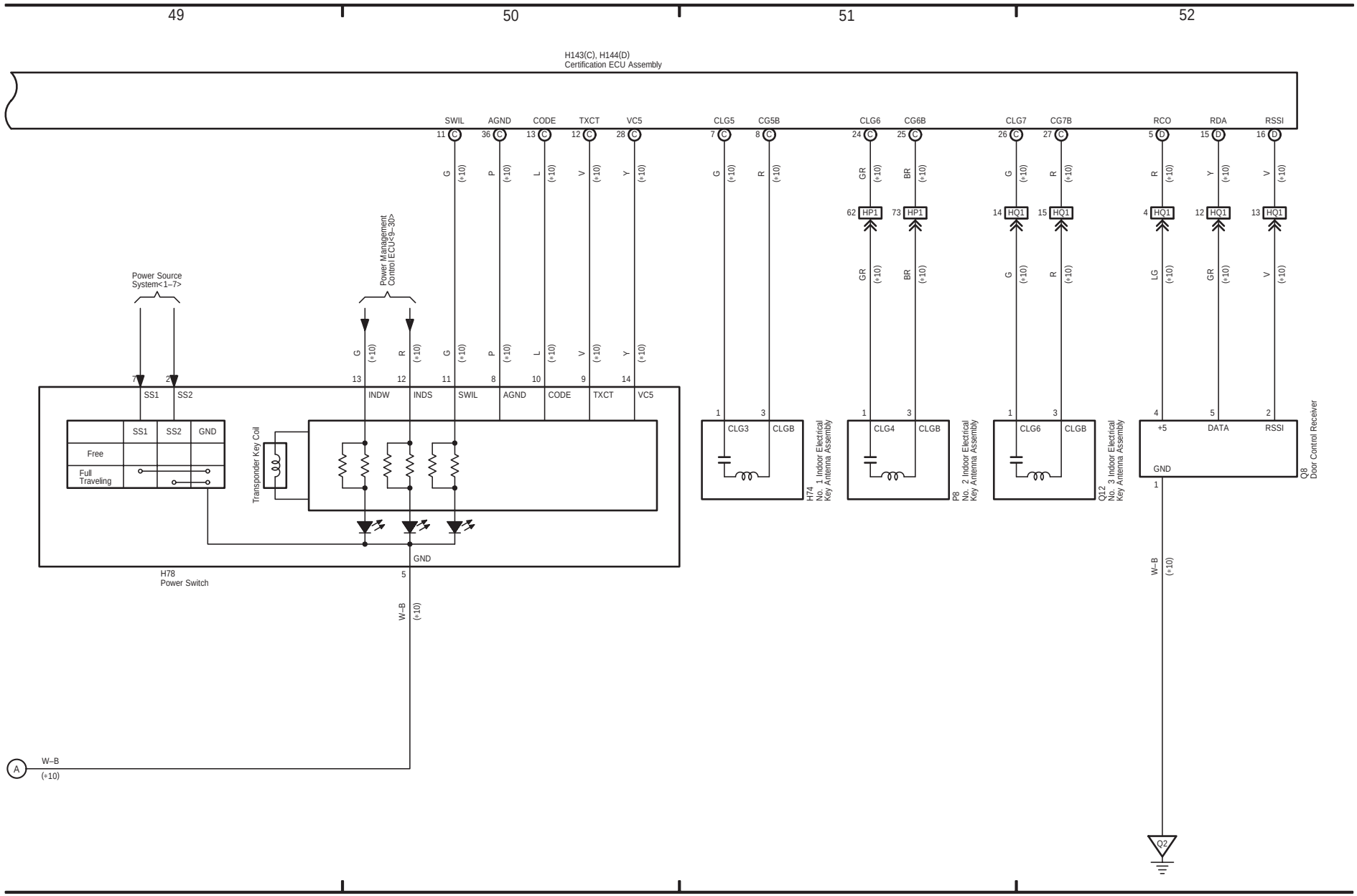
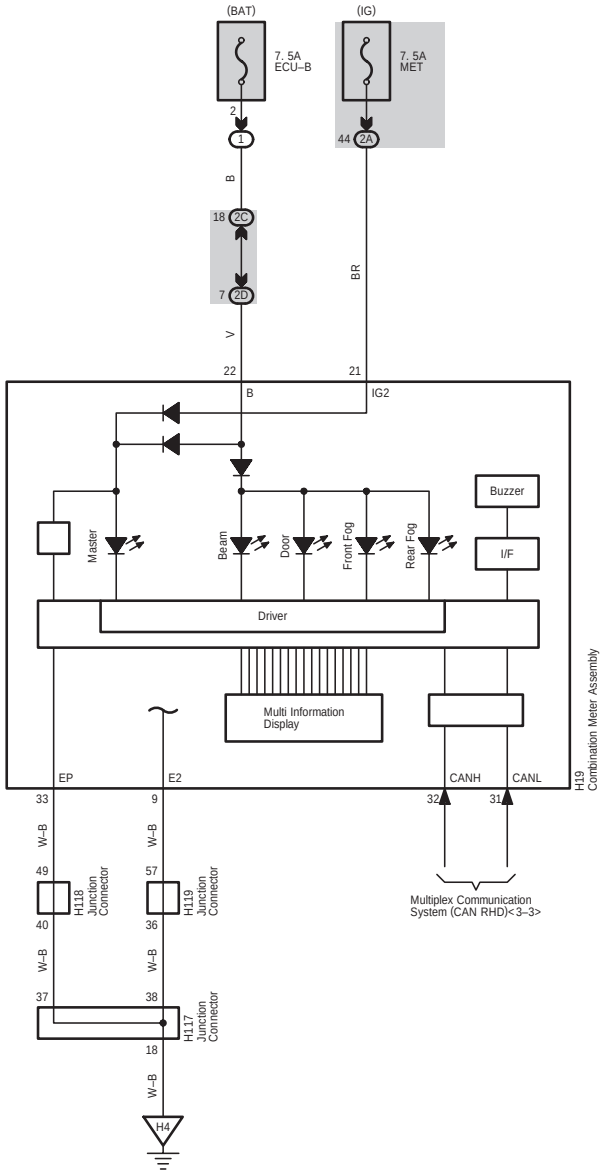
Multiplex Communication System (Body Control RHD)