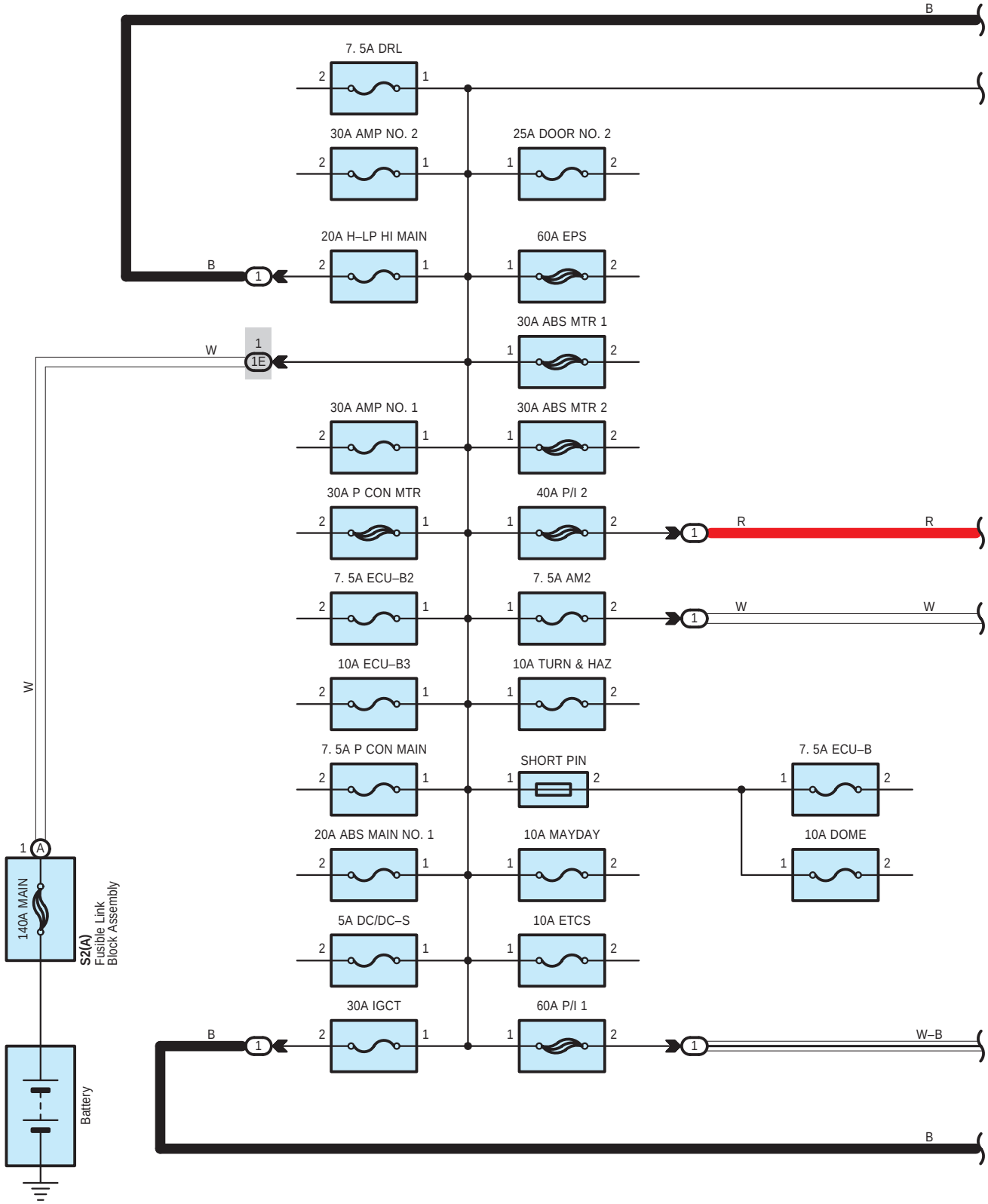
B
7. 5A DRL
30A AMP NO. 2
25A DOOR NO. 2
20A H–LP HI MAIN
60A EPS
30A ABS MTR 1
W
1E
30A AMP NO. 1
30A ABS MTR 2
30A P CON MTR
40A P/I 2
R
7. 5A ECU–B2
7. 5A AM2
W
10A ECU–B3
10A TURN & HAZ
7. 5A P CON MAIN
SHORT PIN
7. 5A ECU–B
20A ABS MAIN NO. 1
10A MAYDAY
10A DOME
5A DC/DC–S
10A ETCS
30A IGCT
60A P/I 1
W–B
140A MAIN
S2(A)
Fusible Link
Block Assembly
Battery

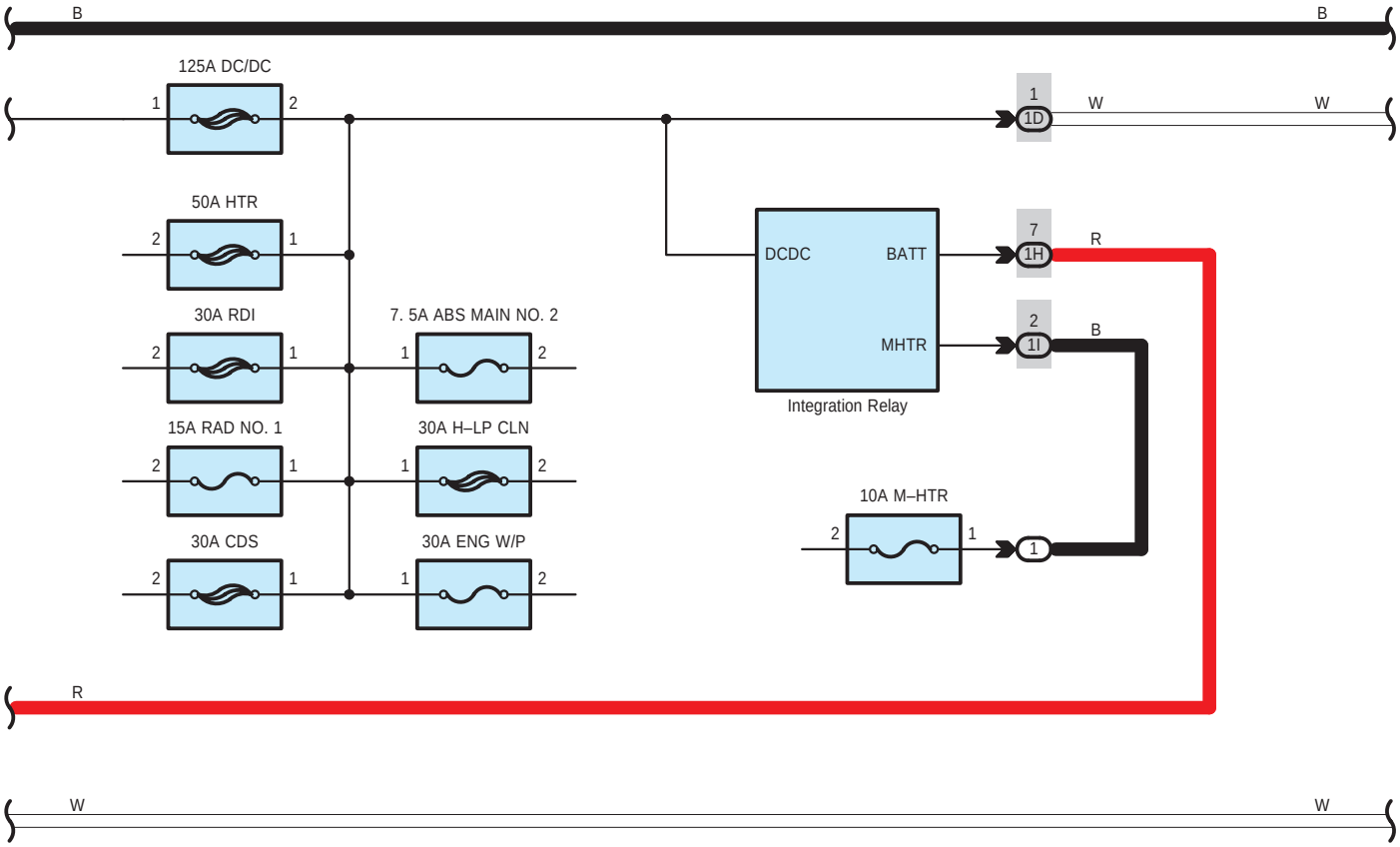
B
B
125A DC/DC
1
2
1
1D
W
W
50A HTR
2
1
DCDC
BATT
MHTR
7
1H
R
30A RDI
2
1
7. 5A ABS MAIN NO. 2
1
2
2
1I
B
Integration Relay
15A RAD NO. 1
2
1
30A H–LP CLN
1
2
10A M–HTR
2
1
1
30A CDS
2
1
30A ENG W/P
1
2
R
W
W

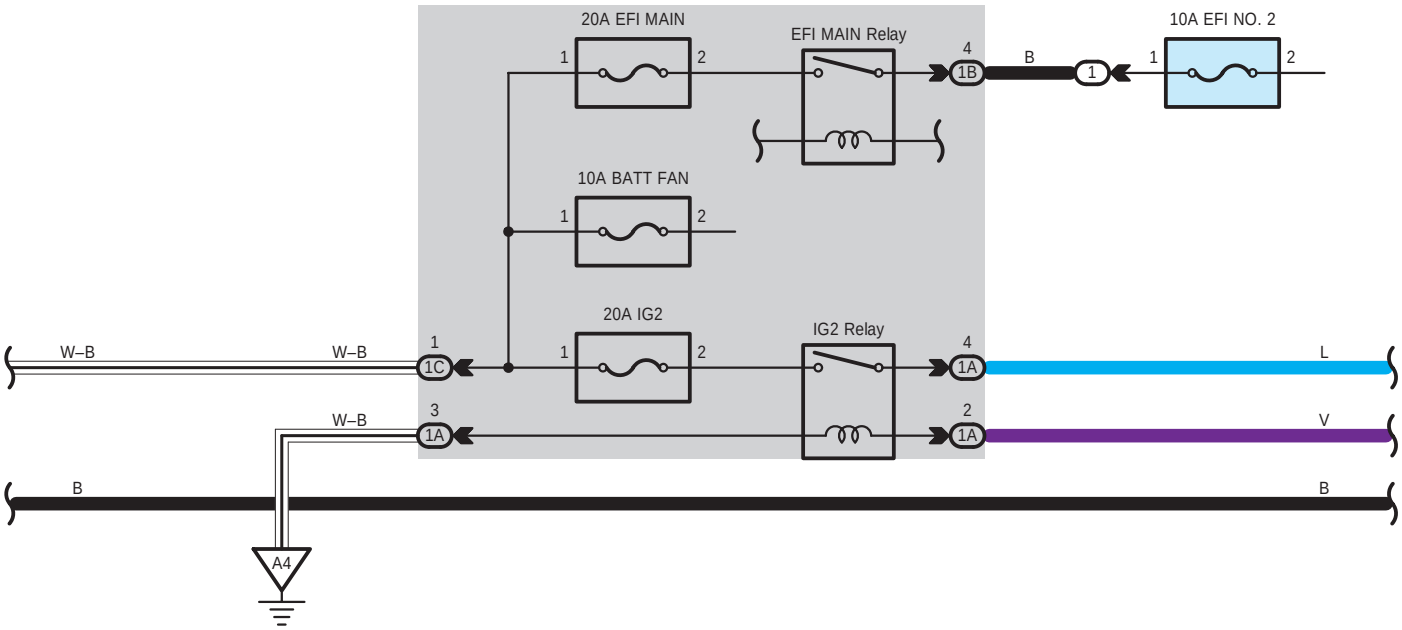
20A EFI MAIN
1
2
EFI MAIN Relay
4
1B
B
1
10A EFI NO. 2
1
2
10A BATT FAN
1
2
20A IG2
1
2
IG2 Relay
W–B
W–B
1
1C
4
1A
L
W–B
3
1A
2
1A
V
B
B
A4

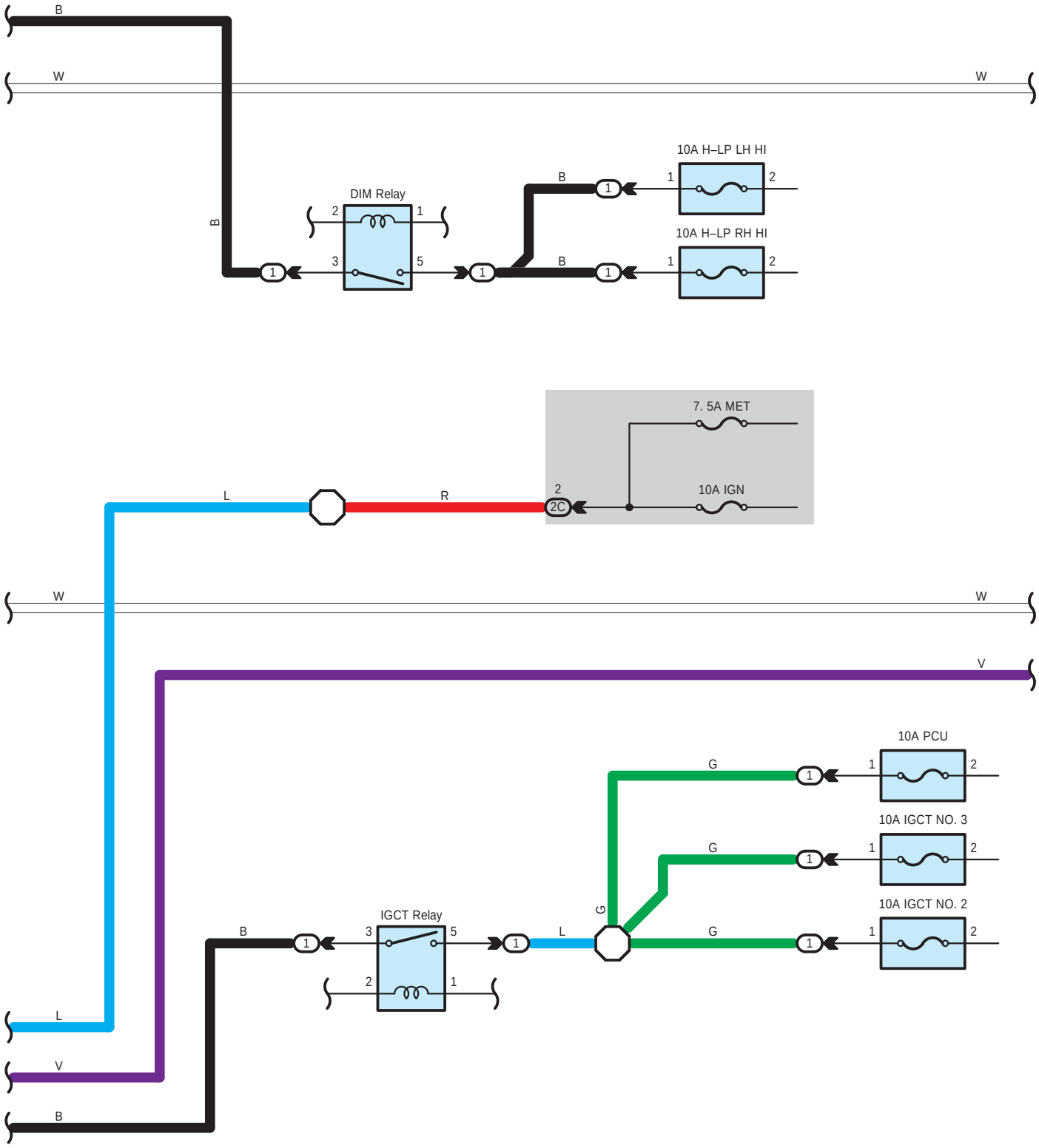
B
W
W
B
DIM Relay
2
1
3
5
1
1
B
1
10A H–LP LH HI
1
2
B
1
10A H–LP RH HI
1
2
7. 5A MET
L
R
2
2C
10A IGN
W
W
V
10A PCU
G
1
1
2
10A IGCT NO. 3
G
1
1
2
10A IGCT NO. 2
G
1
1
2
IGCT Relay
B
1
3
5
1
L
G
2
1
L
V
B

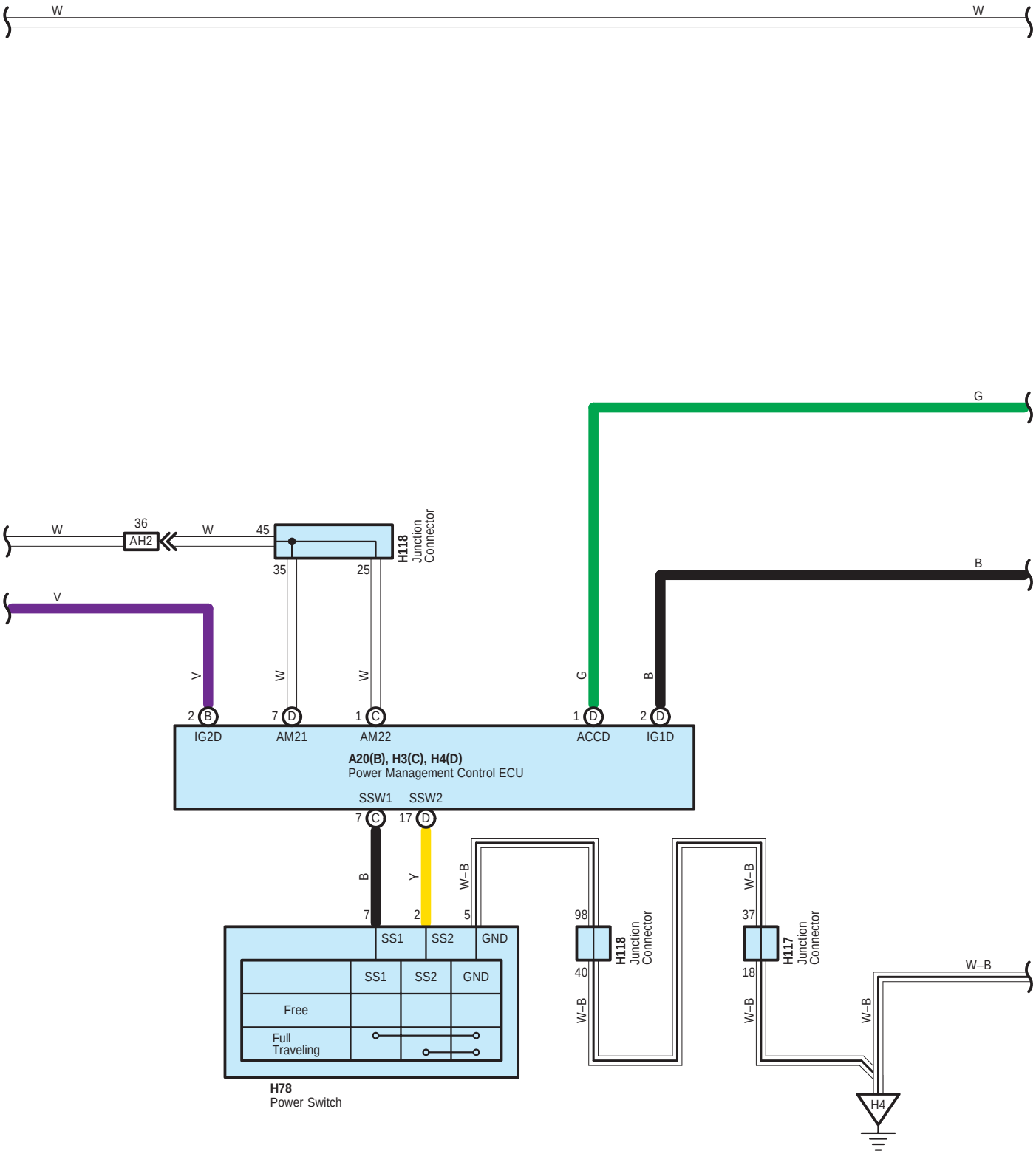
W
W
G
W
36
AH2
W
45
H118
Junction
Connector
35
25
B
V
V
W
W
G
B
2 B
7 D
1 C
1 D
2 D
IG2D
AM21
AM22
ACCD
IG1D
A20(B), H3(C), H4(D)
Power Management Control ECU
SSW1
SSW2
7 C
17 D
B
Y
W–B
7
2
5
SS1
SS2
GND
SS1
SS2
GND
Free
Full
Traveling
H78
Power Switch
98
40
H118
Junction
Connector
W–B
W–B
37
18
H117
Junction
Connector
W–B
W–B
W–B
H4

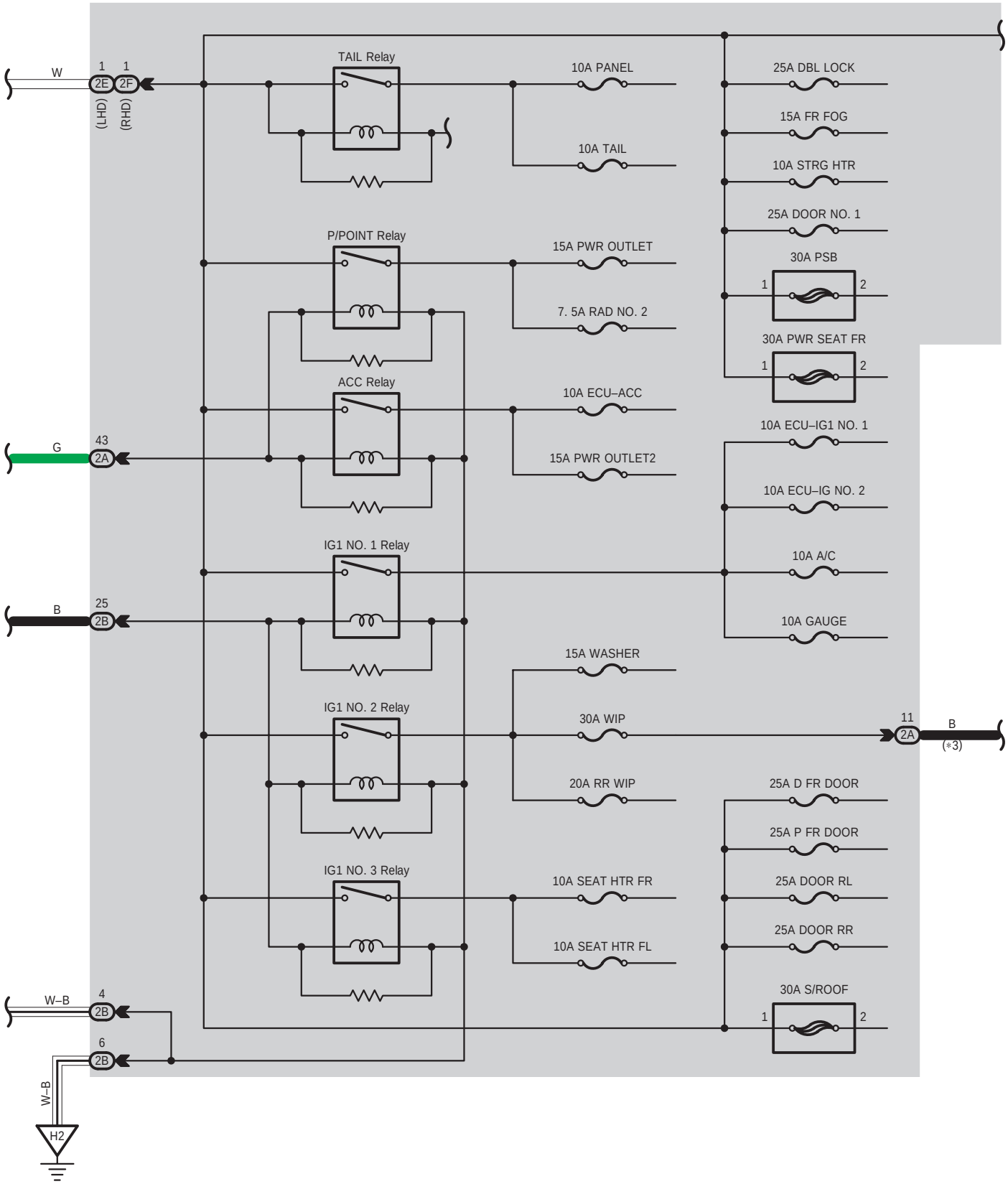
W
1
1
2E
2F
(LHD)
(RHD)
TAIL Relay
10A PANEL
10A TAIL
25A DBL LOCK
15A FR FOG
10A STRG HTR
25A DOOR NO. 1
P/POINT Relay
15A PWR OUTLET
7. 5A RAD NO. 2
30A PSB
30A PWR SEAT FR
ACC Relay
10A ECU–ACC
15A PWR OUTLET2
G
43
2A
10A ECU–IG1 NO. 1
10A ECU–IG NO. 2
IG1 NO. 1 Relay
10A A/C
B
25
2B
10A GAUGE
15A WASHER
IG1 NO. 2 Relay
30A WIP
11
2A
B
(*3)
20A RR WIP
25A D FR DOOR
25A P FR DOOR
IG1 NO. 3 Relay
10A SEAT HTR FR
25A DOOR RL
25A DOOR RR
10A SEAT HTR FL
30A S/ROOF
W–B
4
2B
6
2B
W–B
H2

∗ 1 : LHD, RHD Light Control Switch LH Side Type
∗ 2 : RHD Light Control Switch RH Side Type
∗ 3 : w/ Dynamic Radar Cruise Control

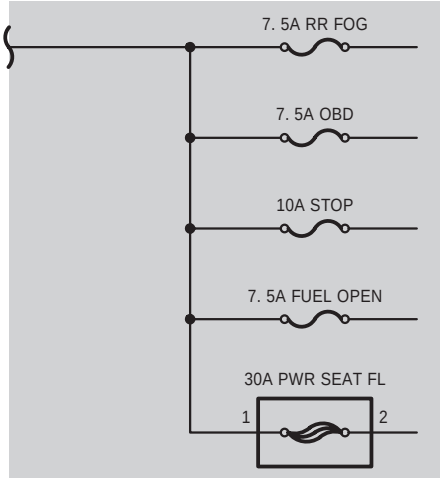

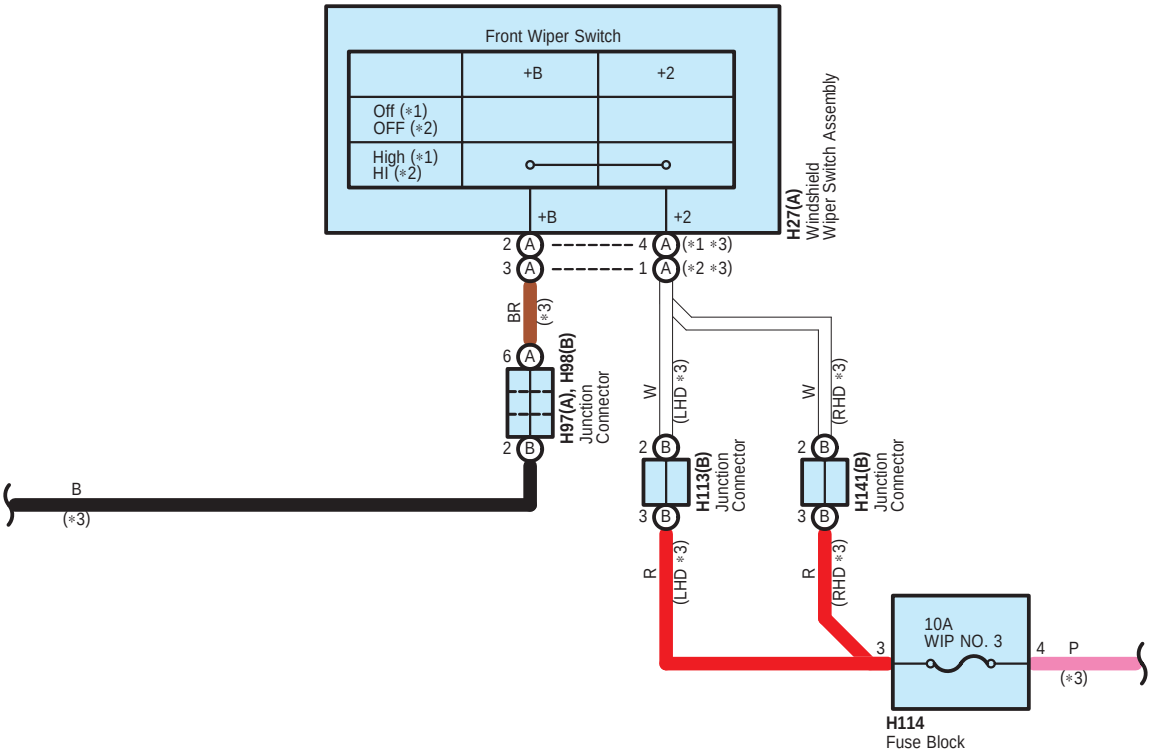

A 20
Gray

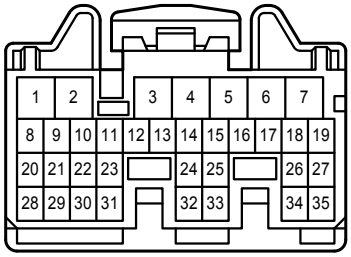

H 3
Gray

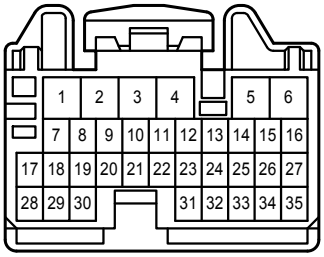

H 4
Gray

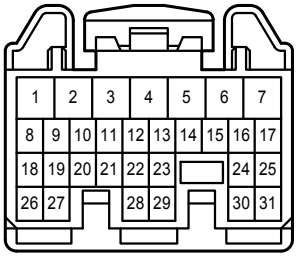

H 27
White

H 78
Black

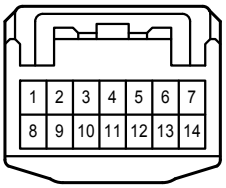

H 97
Black

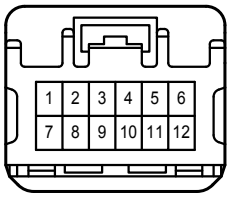

H 98
Black

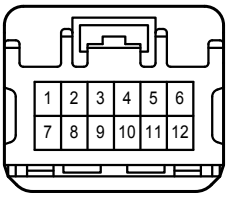

H113
Gray

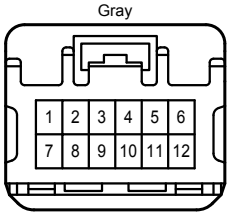

H114
White

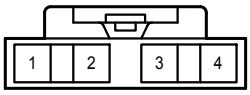

H117
White

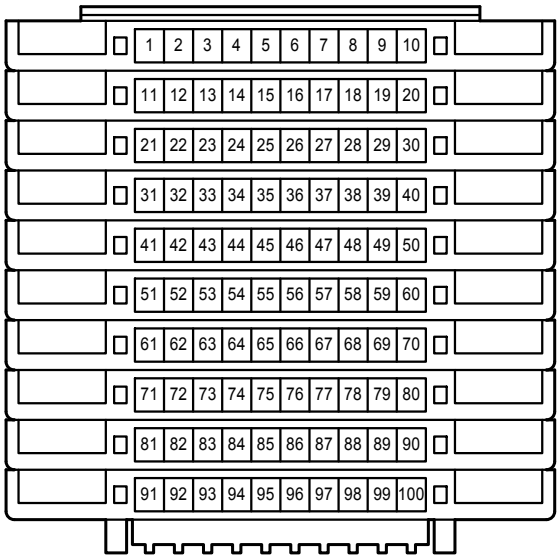

H118
White

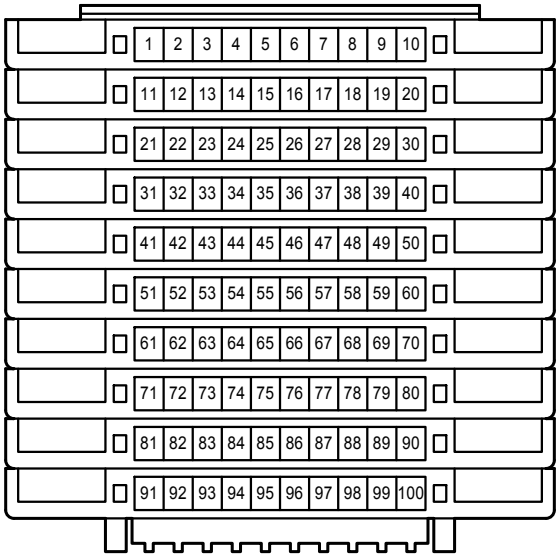

H141
Gray

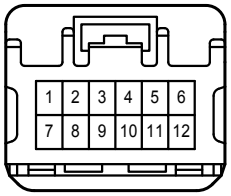

S 2

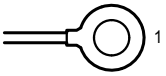

1A
White

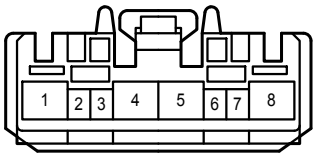

1B
White

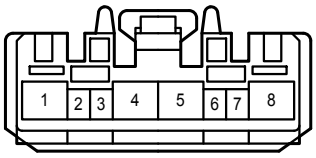

1C
White

1D
Black

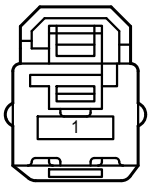

1E
White

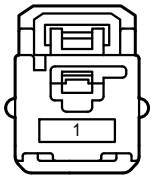

1H
White

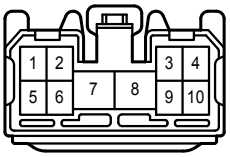

1I
White

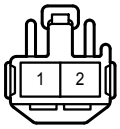

2A
White

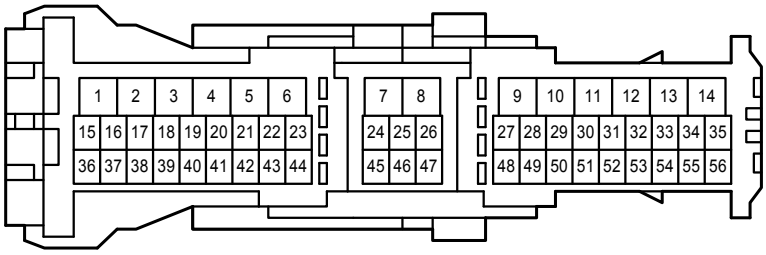

2B
White

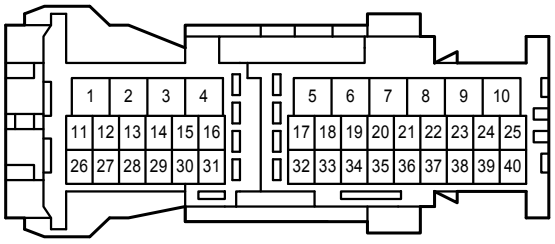

2C
White

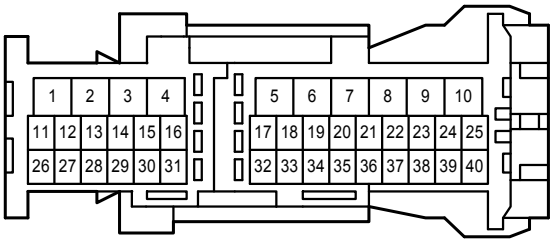

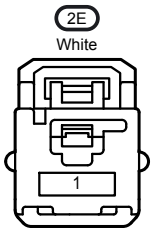
2E
White
1

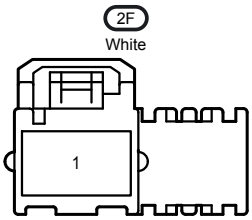
2F
White
1

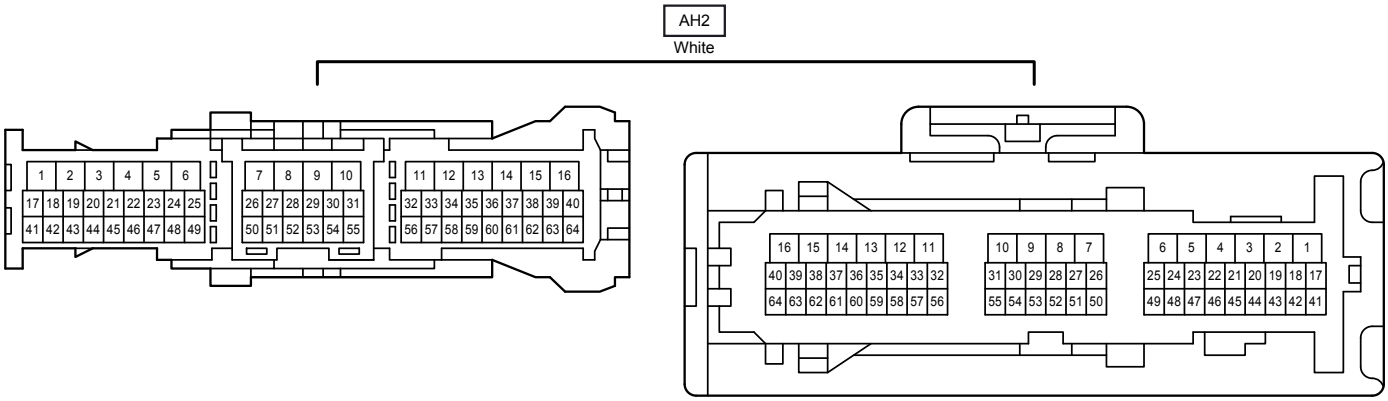
AH2
White
1 2 3 4 5 6
17 18 19 20 21 22 23 24 25
41 42 43 44 45 46 47 48 49
7 8 9 10
26 27 28 29 30 31
50 51 52 53 54 55
11 12 13 14 15 16
32 33 34 35 36 37 38 39 40
56 57 58 59 60 61 62 63 64
16 15 14 13 12 11
40 39 38 37 36 35 34 33 32
64 63 62 61 60 59 58 57 56
10 9 8 7
31 30 29 28 27 26
55 54 53 52 51 50
6 5 4 3 2 1
25 24 23 22 21 20 19 18 17
49 48 47 46 45 44 43 42 41