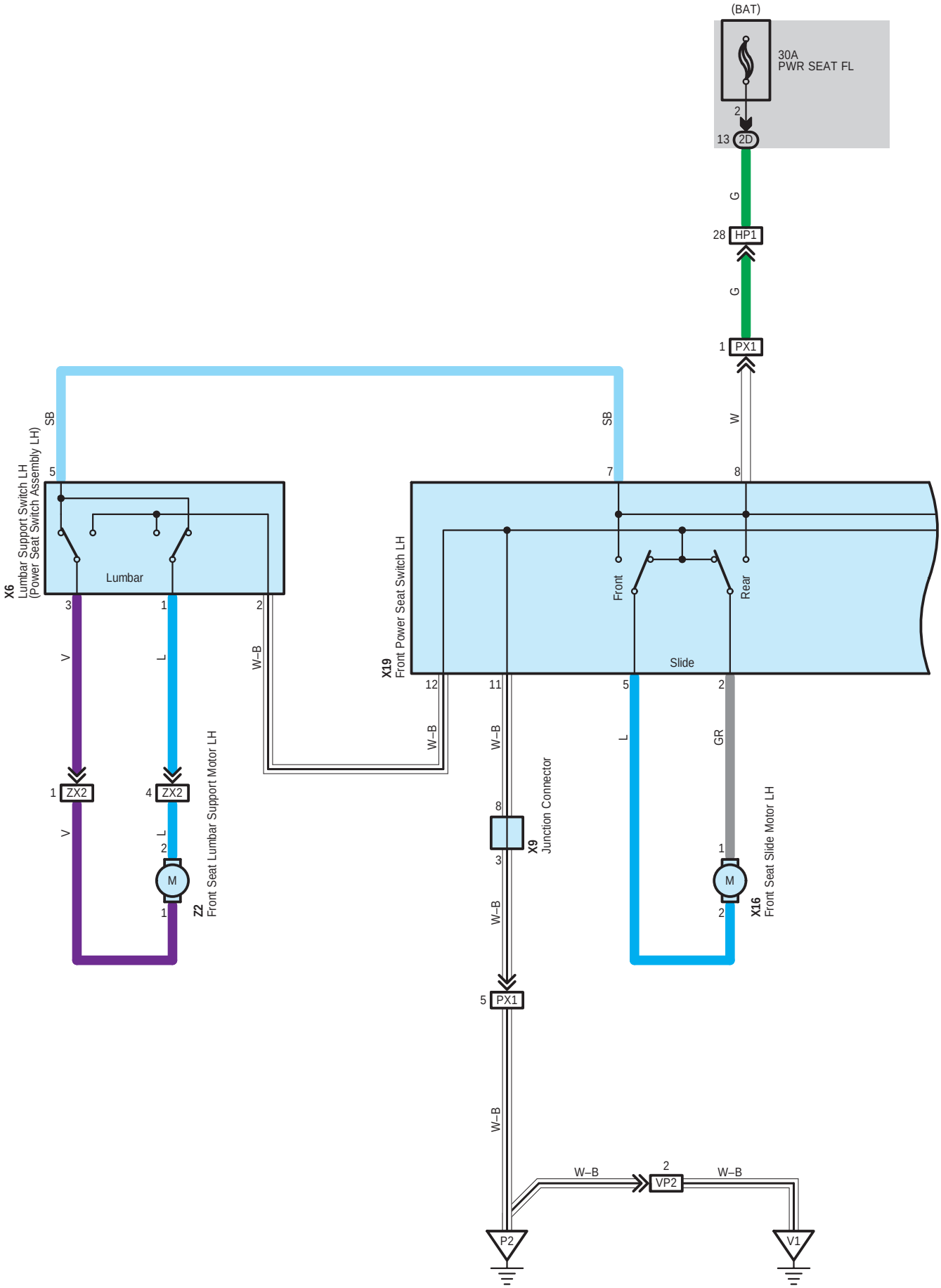
(BAT)
30A
PWR SEAT FL
2
13 2D
G
28 HP1
G
1 PX1
W
SB
SB
5
7
8
X6
Lumbar Support Switch LH
(Power Seat Switch Assembly LH)
Lumbar
3
1
2
V
L
W–B
X19
Front Power Seat Switch LH
Front
Rear
Slide
12
11
5
2
W–B
W–B
L
GR
1 ZX2
4 ZX2
V
L
2
M
1
Z2
Front Seat Lumbar Support Motor LH
8
3
X9
Junction Connector
W–B
1
M
2
X16
Front Seat Slide Motor LH
5 PX1
W–B
W–B
2
VP2
W–B
P2
V1

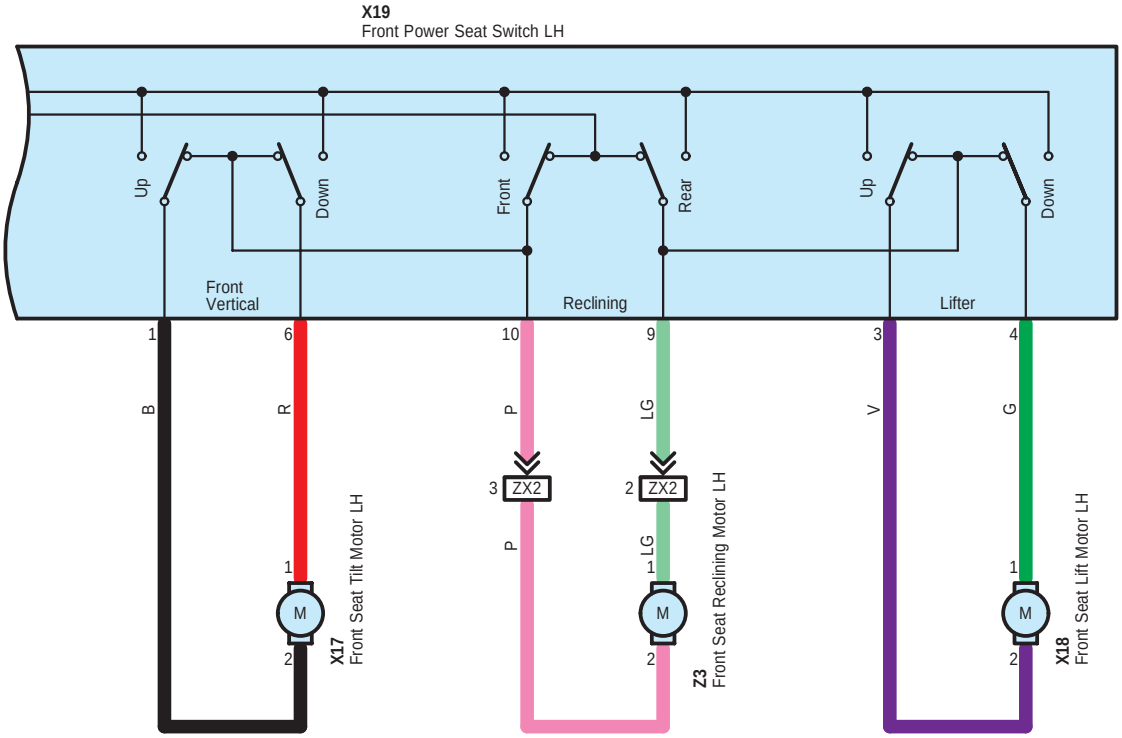
X19
Front Power Seat Switch LH
Up
Down
Front
Rear
Up
Down
Front
Vertical
Reclining
Lifter
1
6
10
9
3
4
B
R
P
LG
V
G
3
ZX2
2
ZX2
P
LG
1
M
2
X17
Front Seat Tilt Motor LH
Z3
Front Seat Reclining Motor LH
X18
Front Seat Lift Motor LH

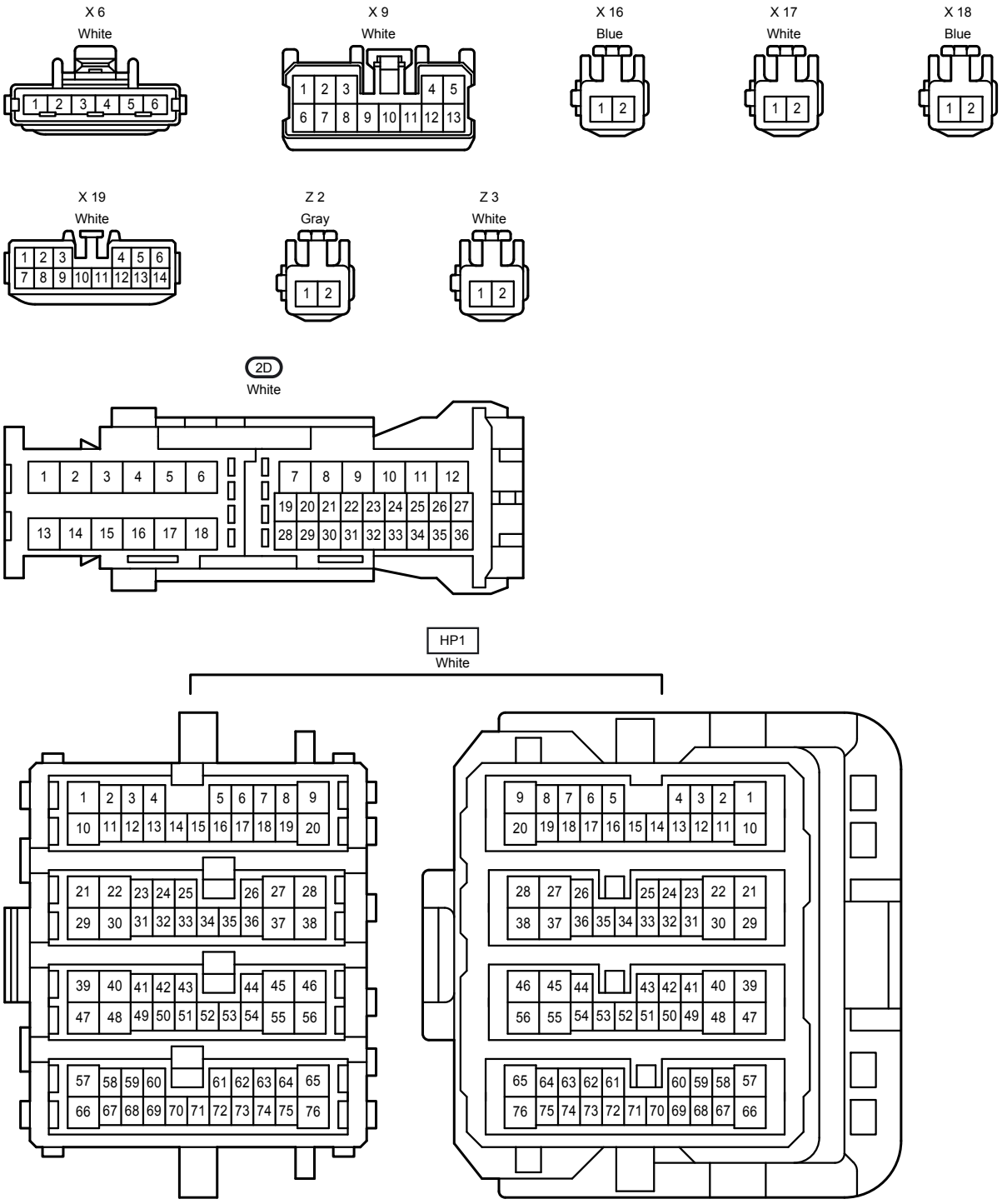
X 6
White
X 9
White
X 16
Blue
X 17
White
X 18
Blue
X 19
White
Z 2
Gray
Z 3
White
2D
White
HP1
White

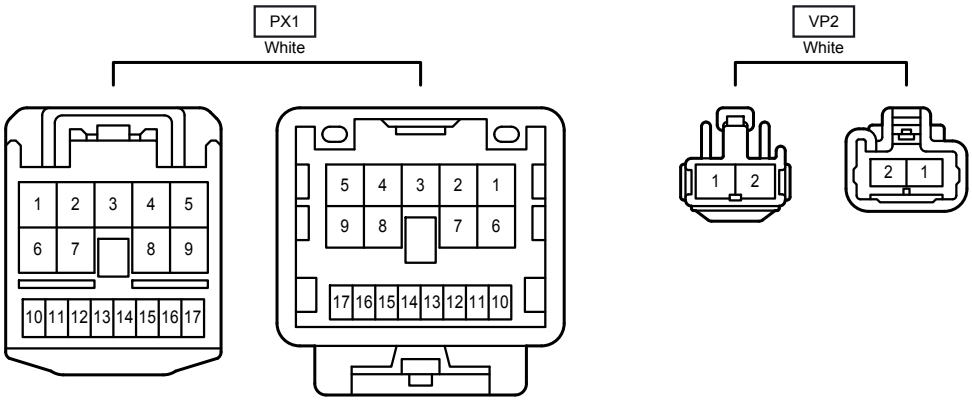
PX1
White
1 2 3 4 5
6 7 8 9
10 11 12 13 14 15 16 17
5 4 3 2 1
9 8 7 6
17 16 15 14 13 12 11 10
VP2
White
1 2
2 1

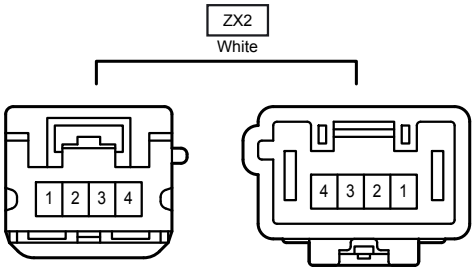
ZX2
White
1 2 3 4
4 3 2 1