[Instrument Panel J/B Assembly Inner Circuit]

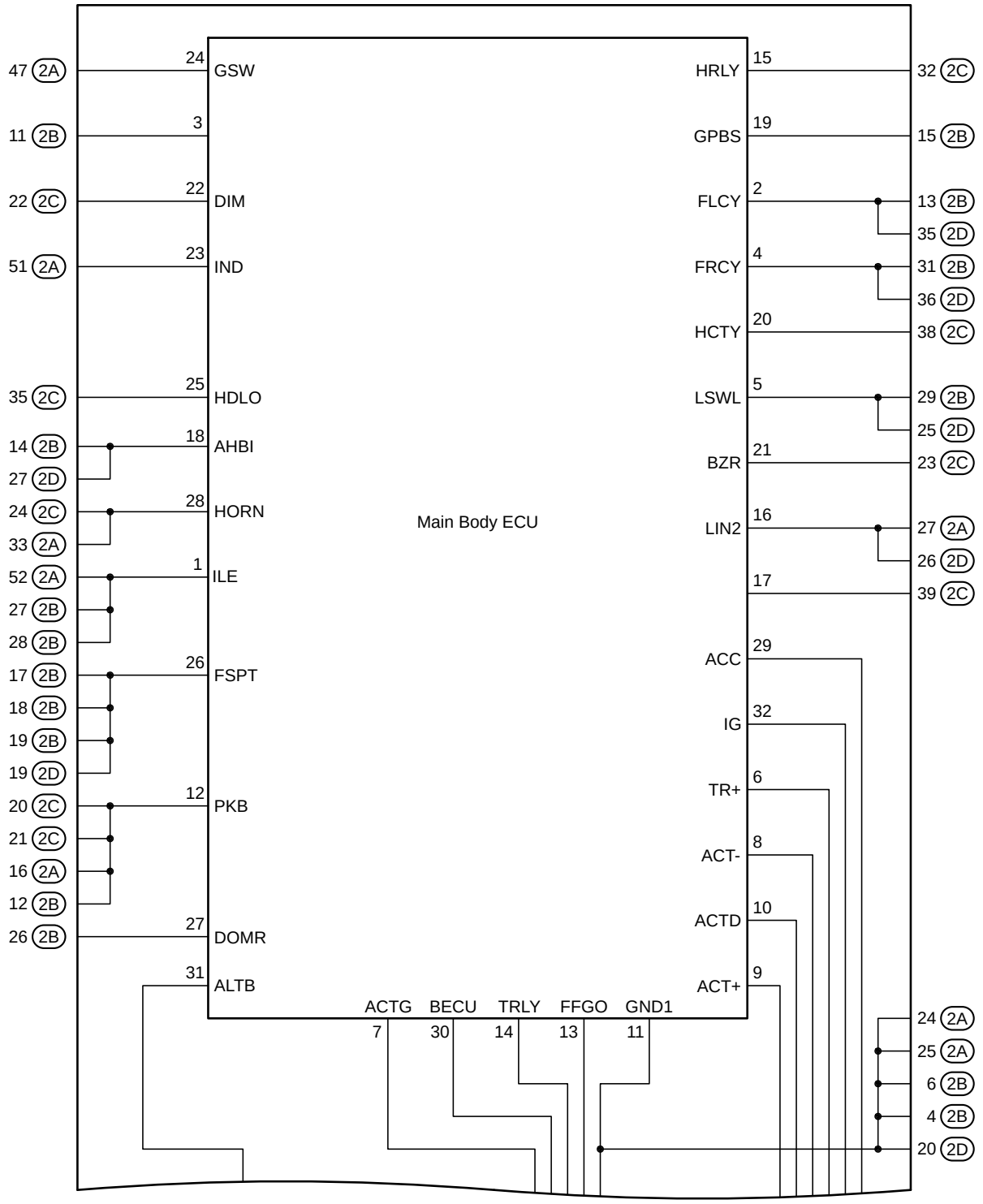

(Cont. Next Page)

[Instrument Panel J/B Assembly Inner Circuit]

* 6:Before Aug. 2014 Production,
From Aug. 2014 Production LHD Except Europe
* 7:From Aug. 2014 Production LHD Europe, RHD

(Cont'd)

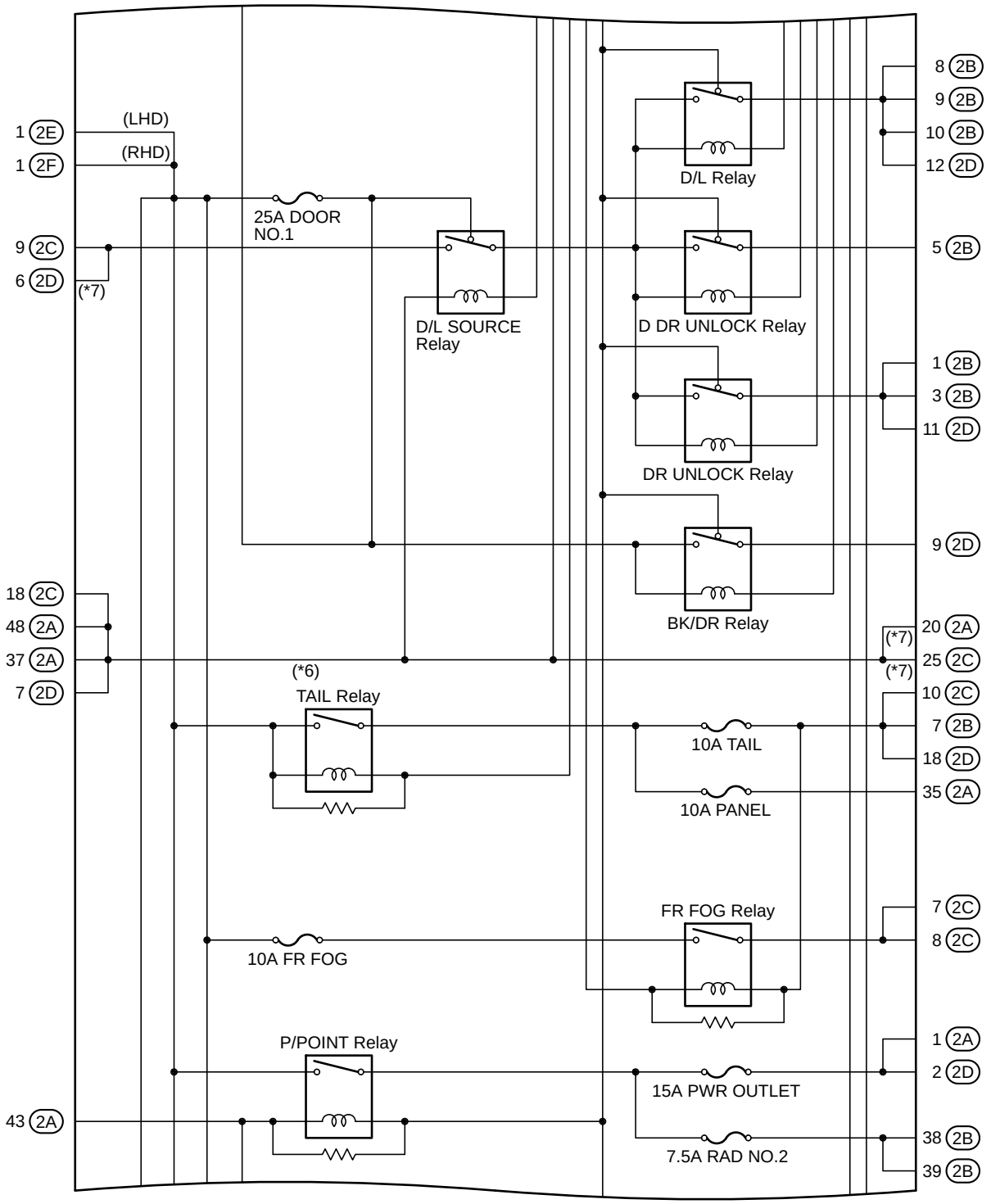

(Cont. Next Page)

[Instrument Panel J/B Assembly Inner Circuit]

(Cont'd)

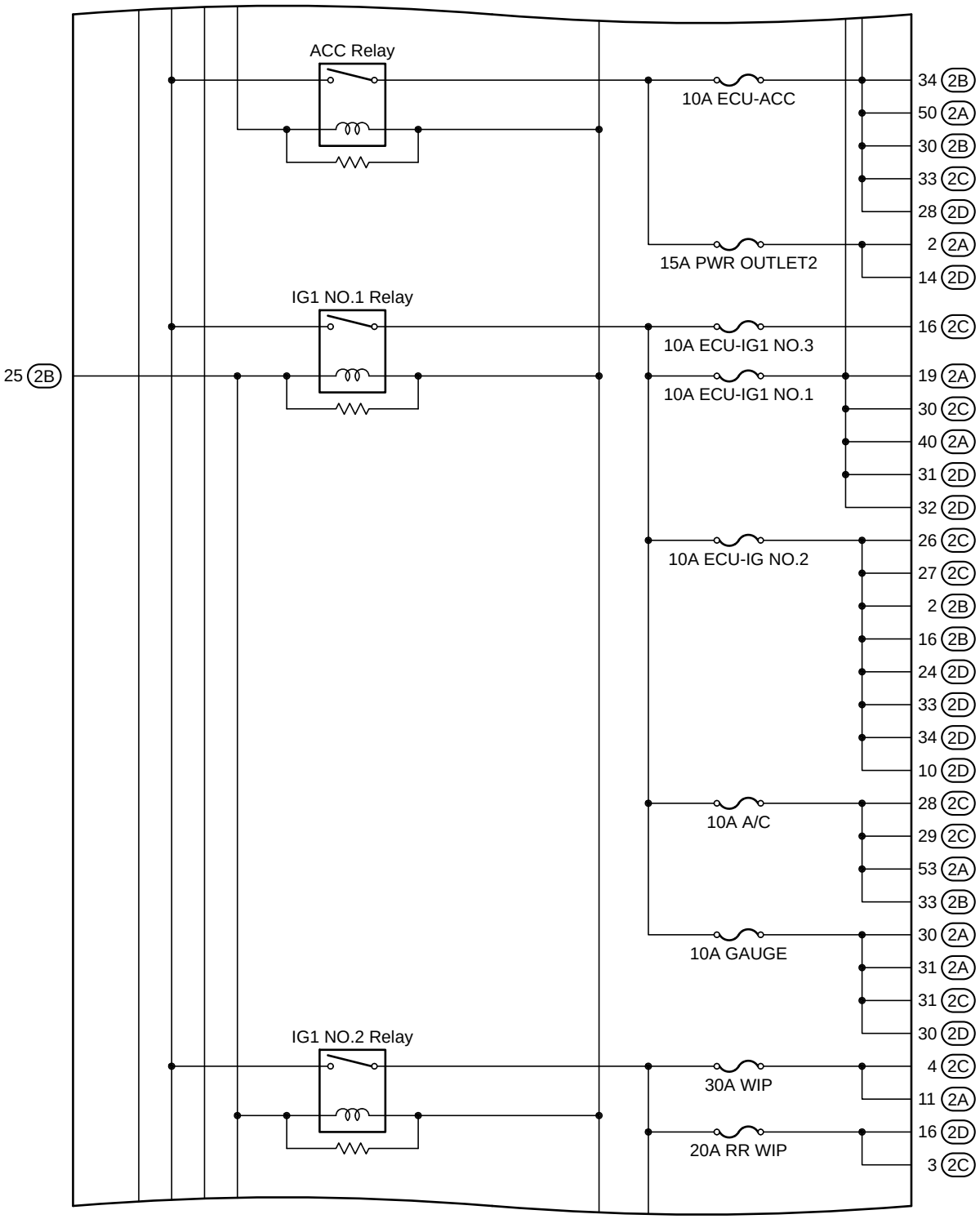

(Cont. Next Page)

[Instrument Panel J/B Assembly Inner Circuit]

* 6:Before Aug. 2014 Production,
From Aug. 2014 Production LHD Except Europe

(Cont'd)

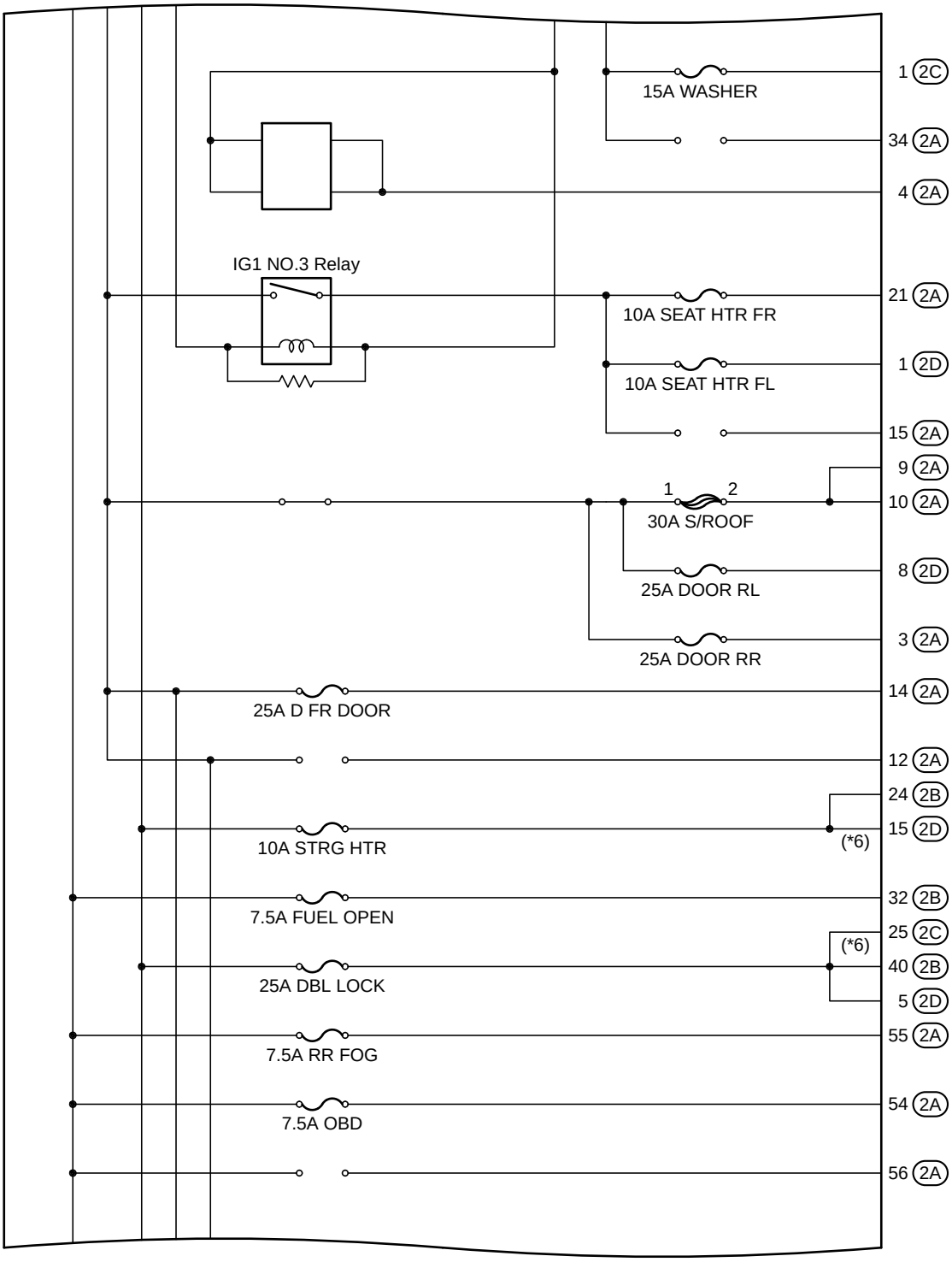

(Cont. Next Page)

[Instrument Panel J/B Assembly Inner Circuit]

(Cont'd)

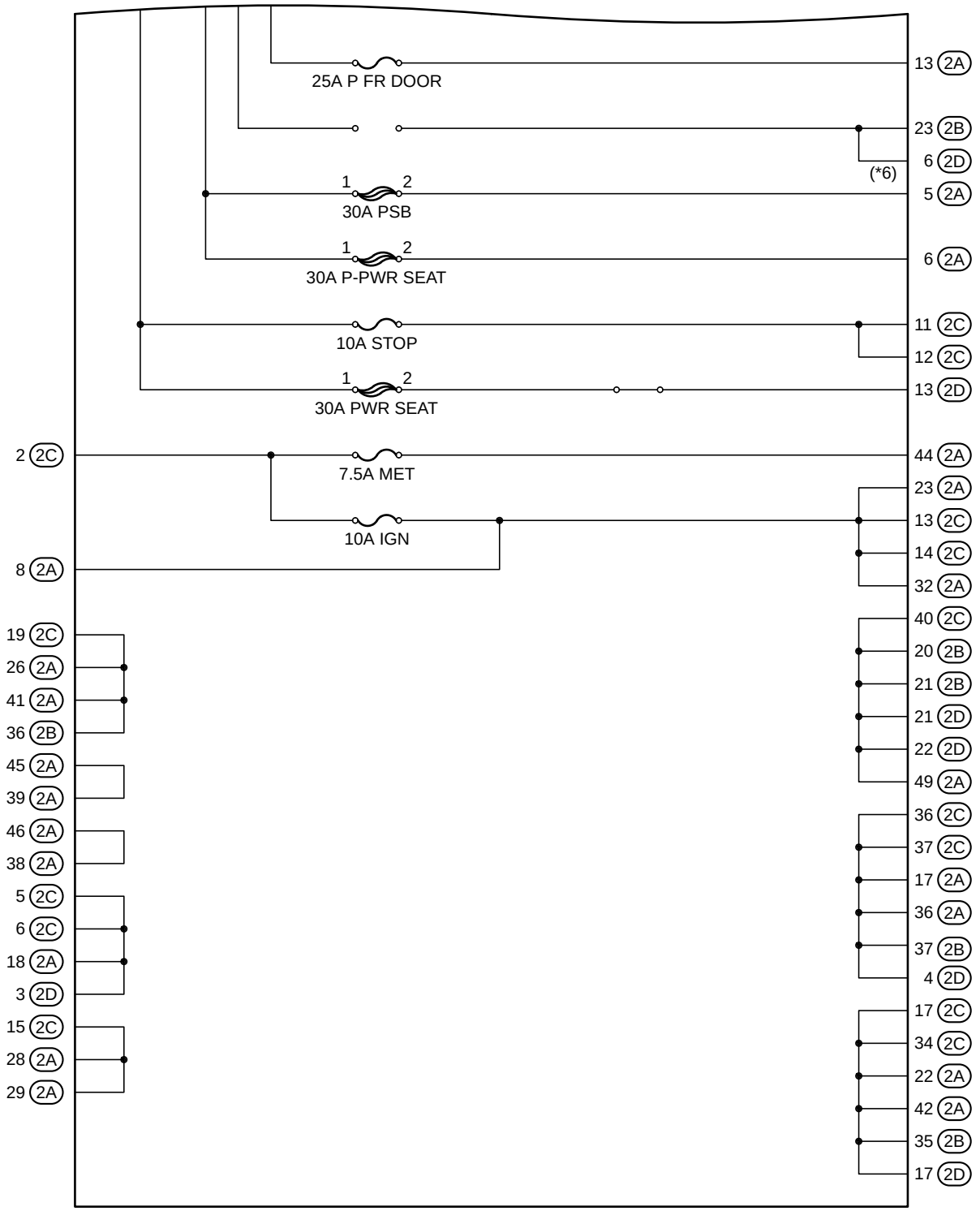

* 6:Before Aug. 2014 Production,
From Aug. 2014 Production LHD Except Europe