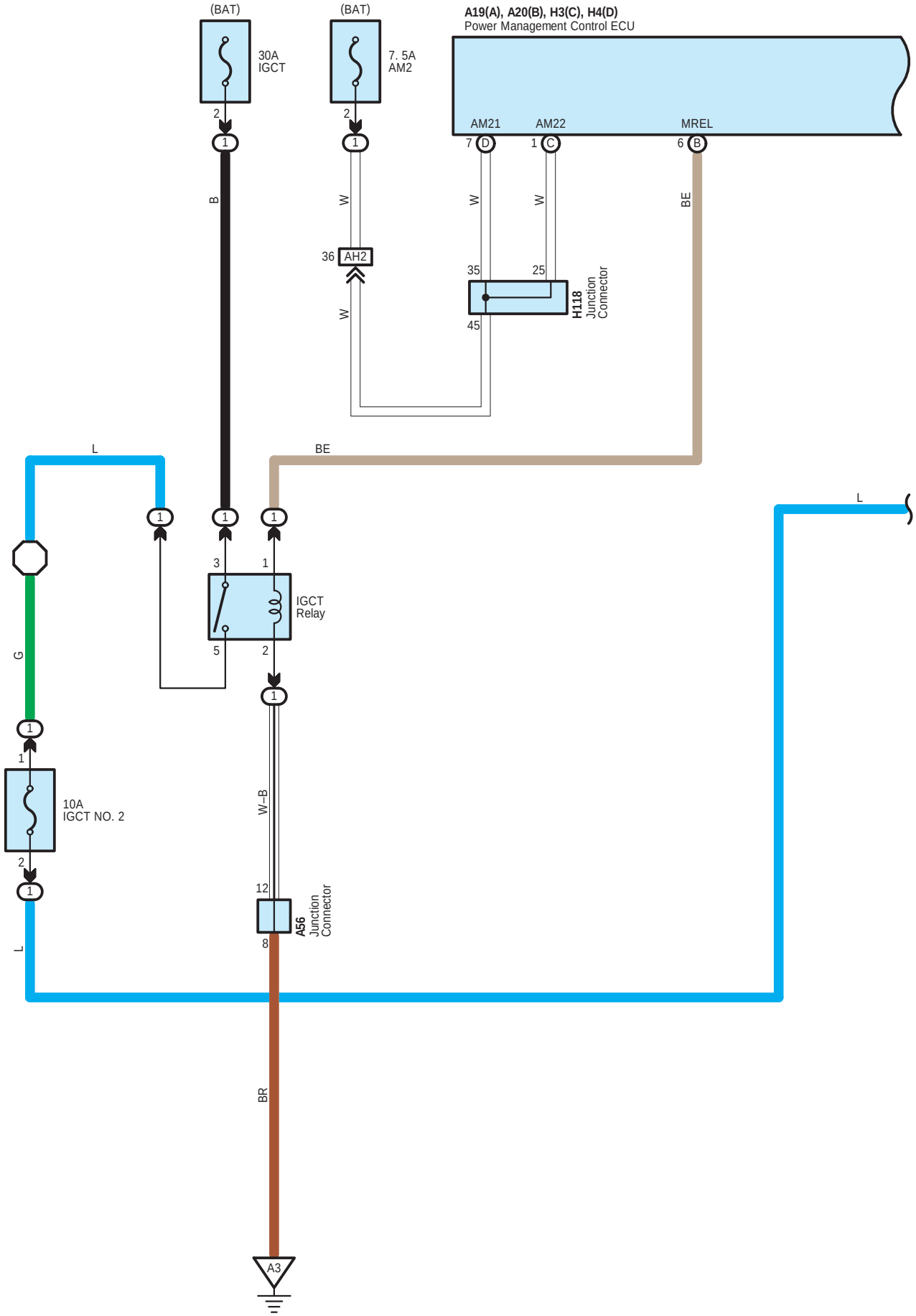
(BAT)
30A
IGCT
(BAT)
7. 5A
AM2
A19(A), A20(B), H3(C), H4(D)
Power Management Control ECU
AM21
AM22
MREL
B
W
W
W
BE
36
AH2
35
25
45
H118
Junction
Connector
L
BE
L
G
3
1
5
2
IGCT
Relay
10A
IGCT NO. 2
W–B
12
8
A56
Junction
Connector
L
BR
A3

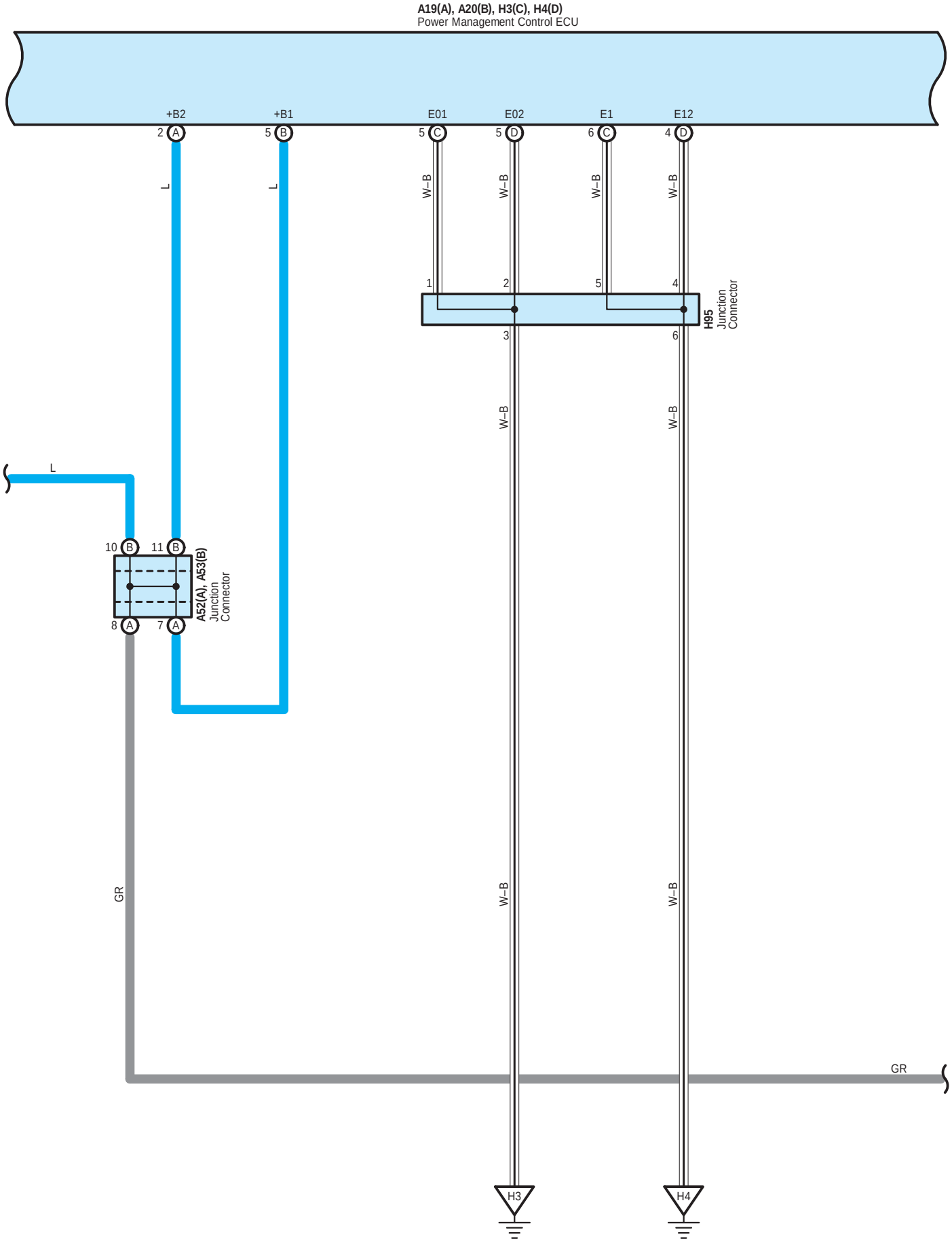
A19(A), A20(B), H3(C), H4(D)
Power Management Control ECU
+B2
+B1
E01
E02
E1
E12
2 A
5 B
5 C
5 D
6 C
4 D
L
L
W–B
W–B
W–B
W–B
1
2
5
4
H95
Junction
Connector
3
6
W–B
W–B
L
10 B
11 B
8 A
7 A
A52(A), A53(B)
Junction
Connector
GR
W–B
W–B
GR
H3
H4

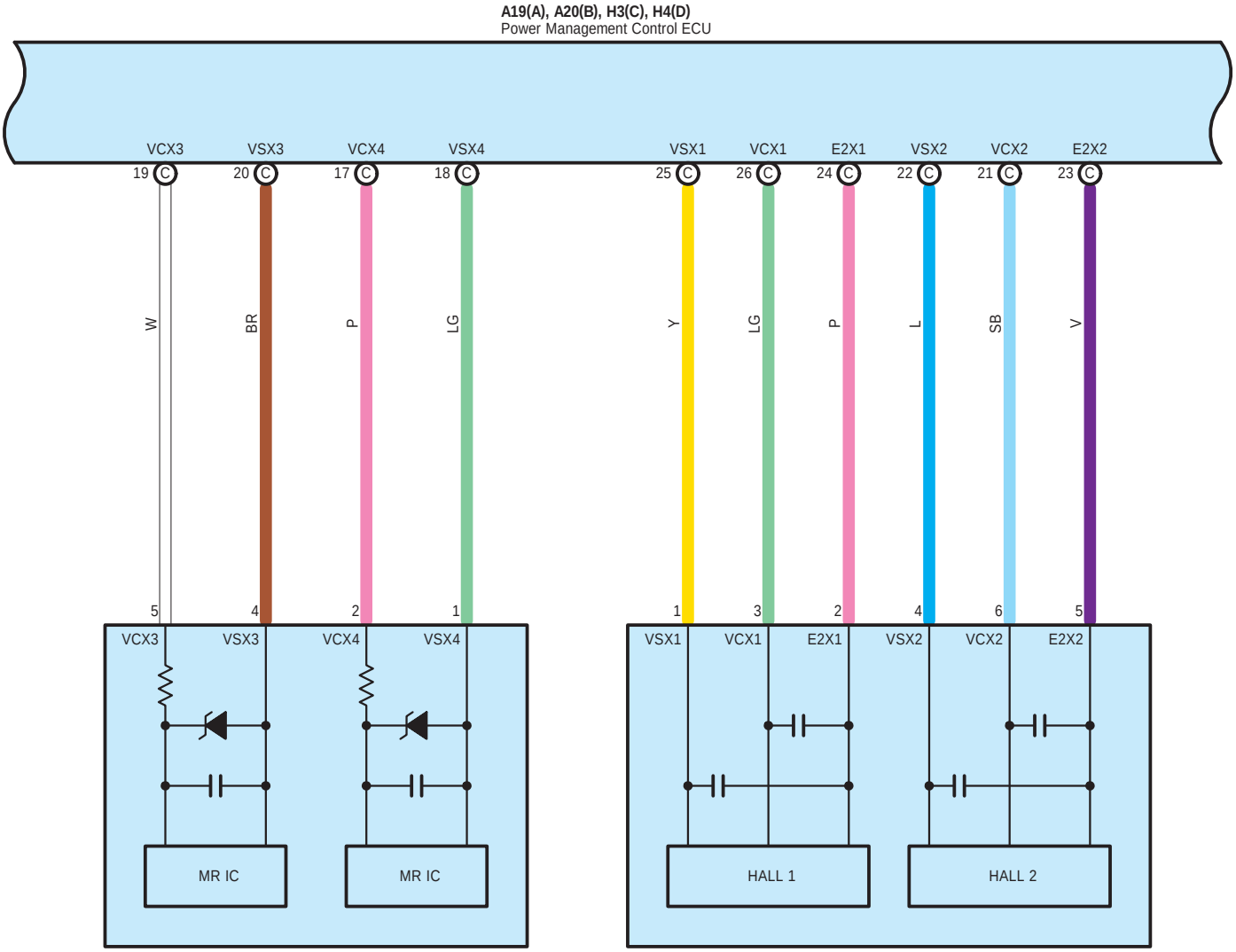
A19(A), A20(B), H3(C), H4(D)
Power Management Control ECU
VCX3
VSX3
VCX4
VSX4
VSX1
VCX1
E2X1
VSX2
VCX2
E2X2
19 C
20 C
17 C
18 C
25 C
26 C
24 C
22 C
21 C
23 C
W
BR
P
LG
Y
LG
P
L
SB
V
5
4
2
1
1
3
2
4
6
5
MR IC
MR IC
HALL 1
HALL 2
H76
No. 1 Shift Lever Position Sensor
H77
No. 2 Shift Lever Position Sensor

GR
GR

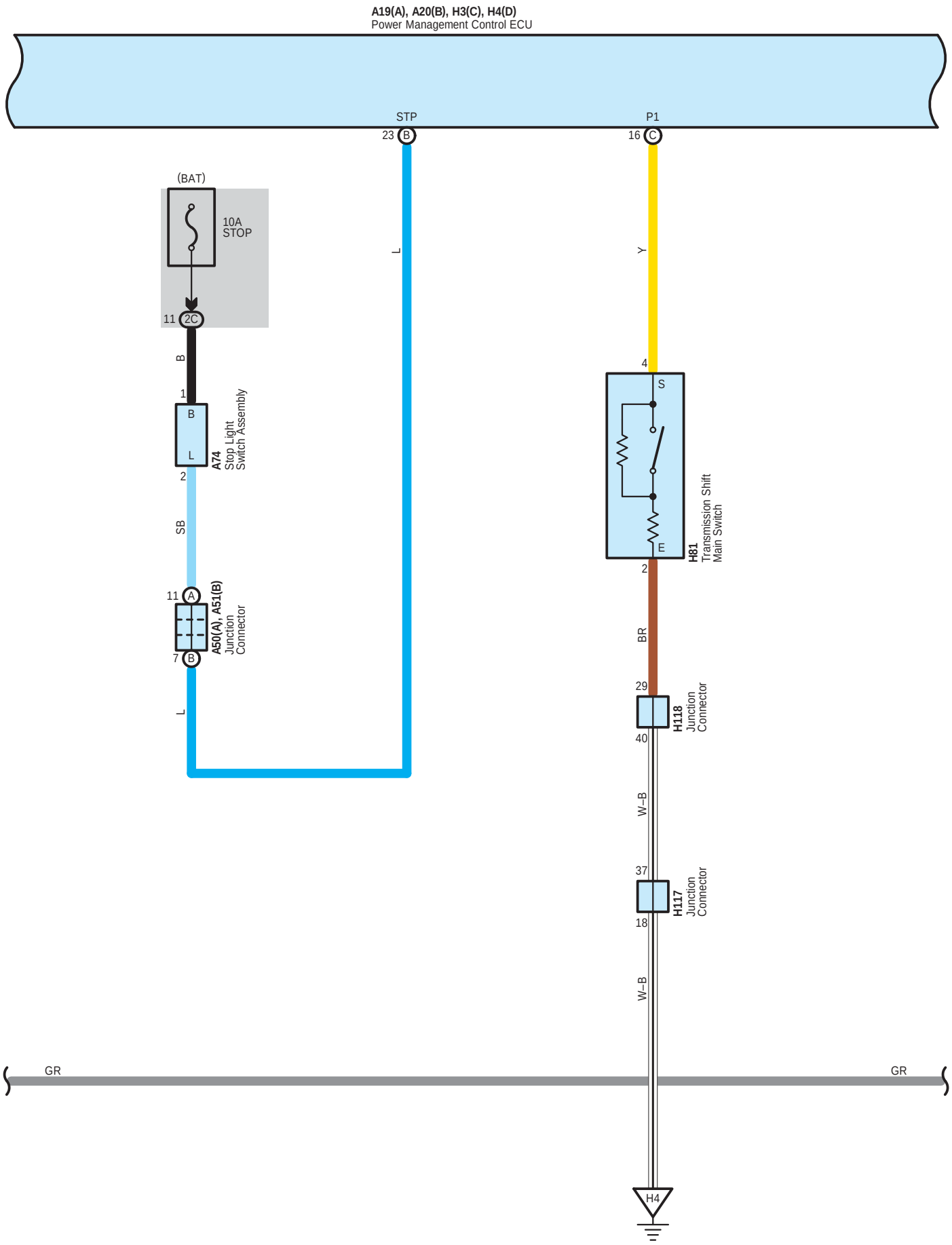
A19(A), A20(B), H3(C), H4(D)
Power Management Control ECU
STP
23 B
P1
16 C
(BAT)
10A
STOP
11 2C
B
1
B
L
A74
Stop Light
Switch Assembly
2
SB
11 A
7 B
A50(A), A51(B)
Junction
Connector
L
L
Y
4
S
E
H81
Transmission Shift
Main Switch
2
BR
29
40
H118
Junction
Connector
W–B
37
18
H117
Junction
Connector
W–B
GR
GR
H4

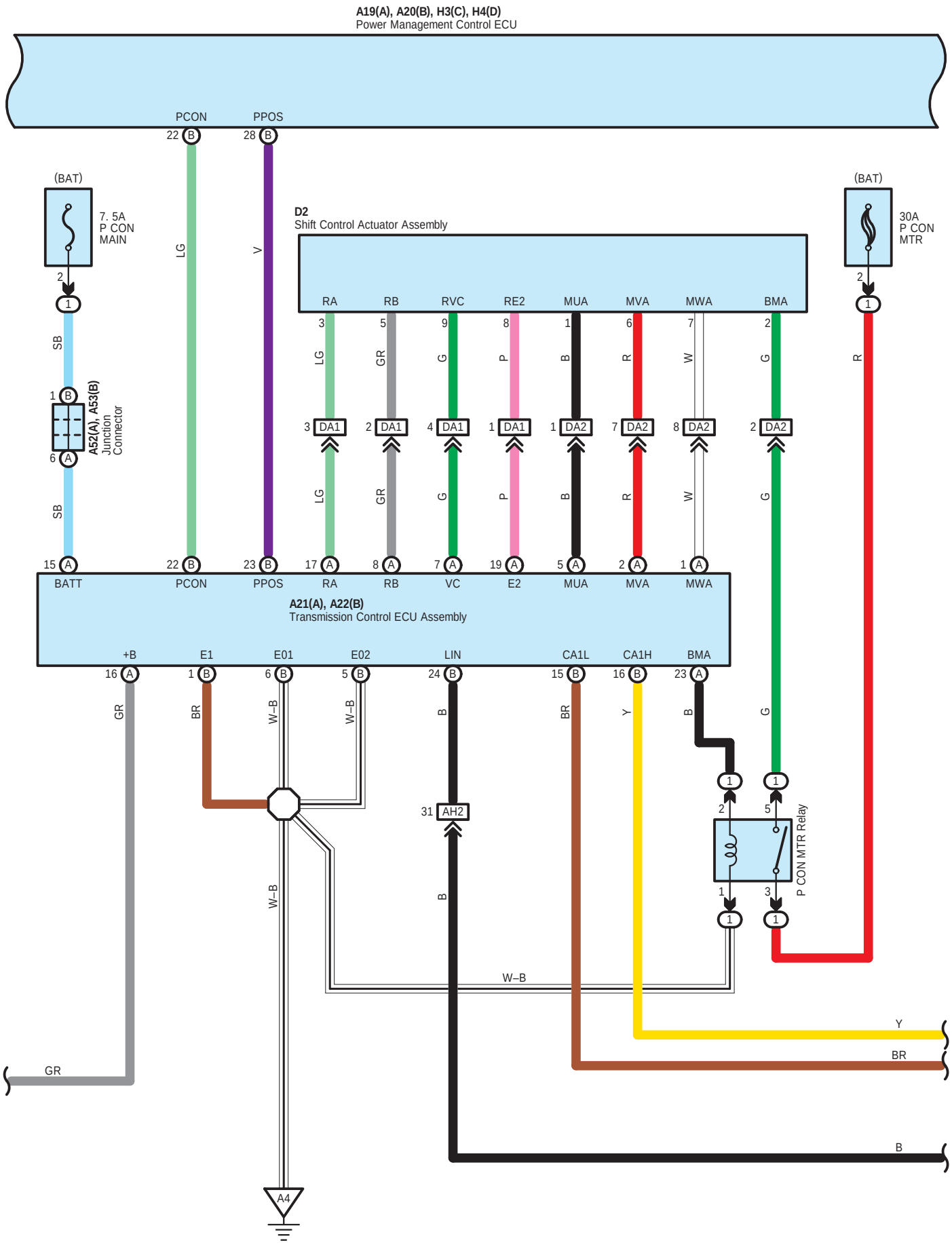
A19(A), A20(B), H3(C), H4(D)
Power Management Control ECU
PCON
PPOS
(BAT)
7. 5A
P CON
MAIN
D2
Shift Control Actuator Assembly
RA
RB
RVC
RE2
MUA
MVA
MWA
BMA
DA1
DA2
A52(A), A53(B)
Junction
Connector
BATT
VC
E2
A21(A), A22(B)
Transmission Control ECU Assembly
+B
E1
E01
E02
LIN
CA1L
CA1H
AH2
30A
P CON
MTR
P CON MTR Relay
A4
GR
BR
W–B
B
Y

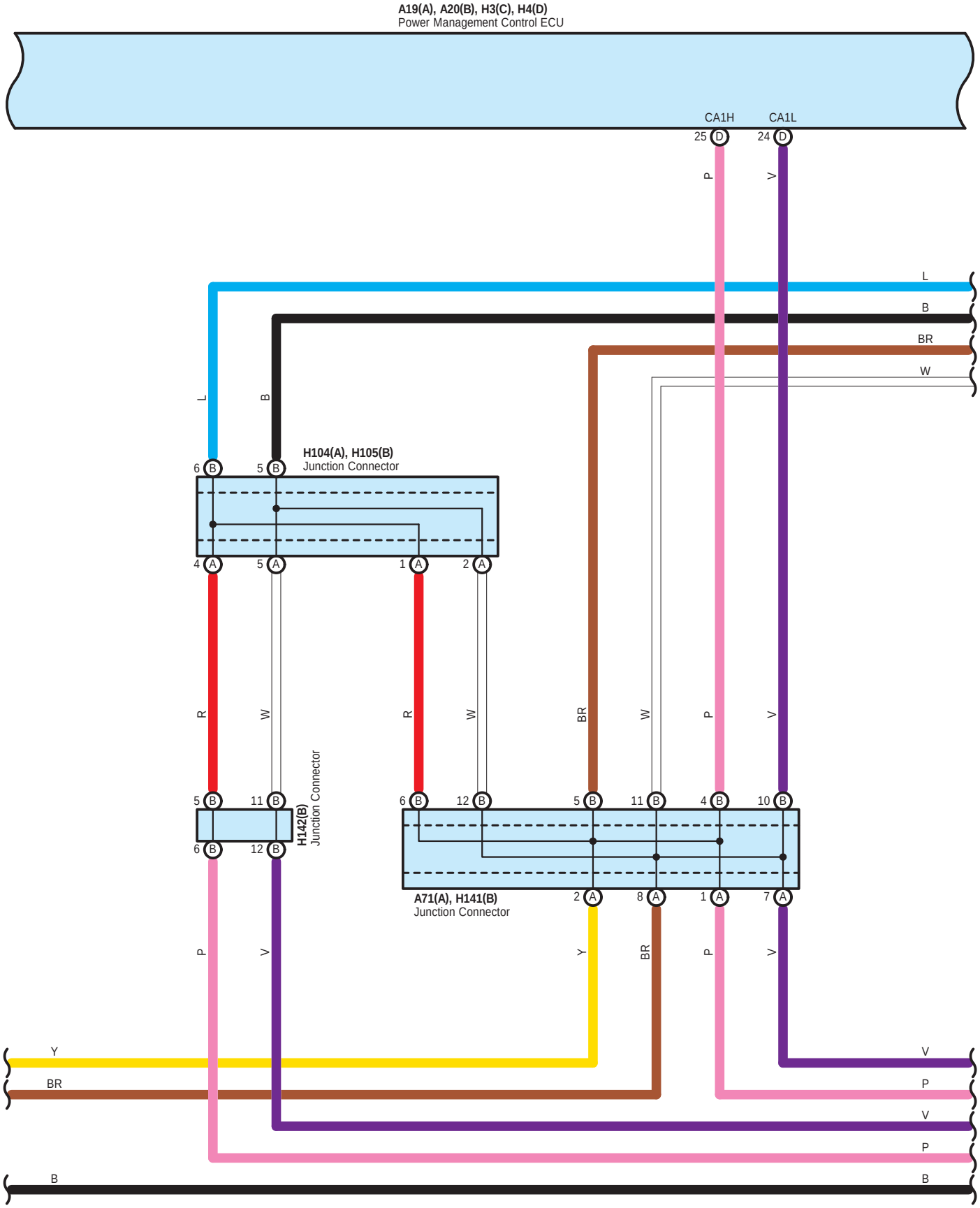
A19(A), A20(B), H3(C), H4(D)
Power Management Control ECU
CA1H
CA1L
25 D
24 D
P
V
L
B
BR
W
H104(A), H105(B)
Junction Connector
6 B
5 B
4 A
5 A
1 A
2 A
R
W
R
W
BR
W
P
V
5 B
11 B
6 B
12 B
H142(B)
Junction Connector
6 B
12 B
5 B
11 B
4 B
10 B
A71(A), H141(B)
Junction Connector
2 A
8 A
1 A
7 A
P
V
Y
BR
P
V
Y
BR
V
P
V
P
B
B

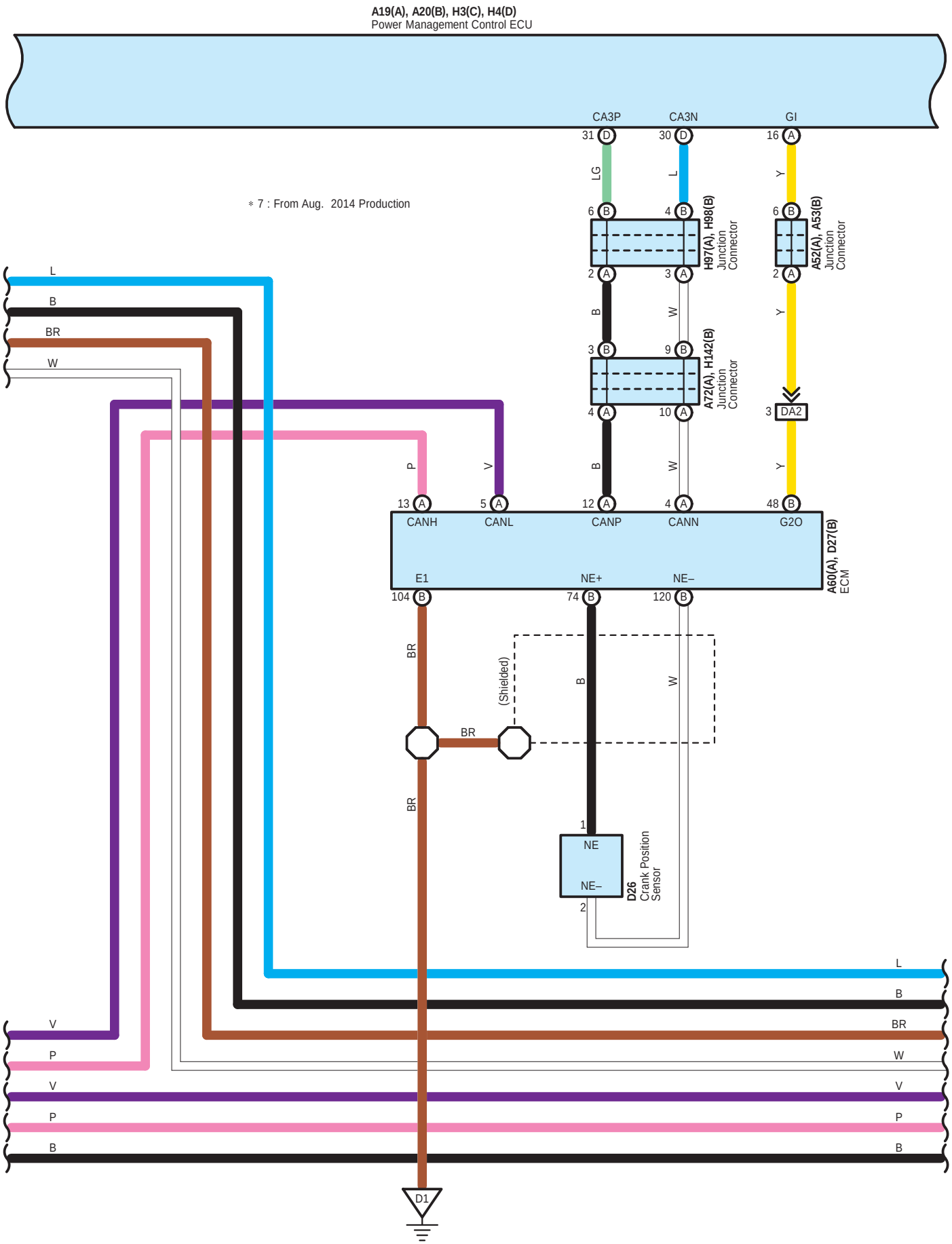
A19(A), A20(B), H3(C), H4(D)
Power Management Control ECU
CA3P
CA3N
GI
31 D
30 D
16 A
LG
L
Y
∗ 7 : From Aug. 2014 Production
6 B
4 B
6 B
H97(A), H98(B)
Junction
Connector
A52(A), A53(B)
Junction
Connector
2 A
3 A
2 A
B
W
Y
3 B
9 B
A72(A), H142(B)
Junction
Connector
4 A
10 A
3 DA2
P
V
B
W
Y
13 A
5 A
12 A
4 A
48 B
CANH
CANL
CANP
CANN
G2O
A60(A), D27(B)
ECM
E1
NE+
NE–
104 B
74 B
120 B
BR
(Shielded)
B
W
BR
BR
1
NE
NE–
2
D26
Crank Position
Sensor
L
B
BR
W
V
P
V
P
B
L
B
BR
W
V
P
V
P
B
D1

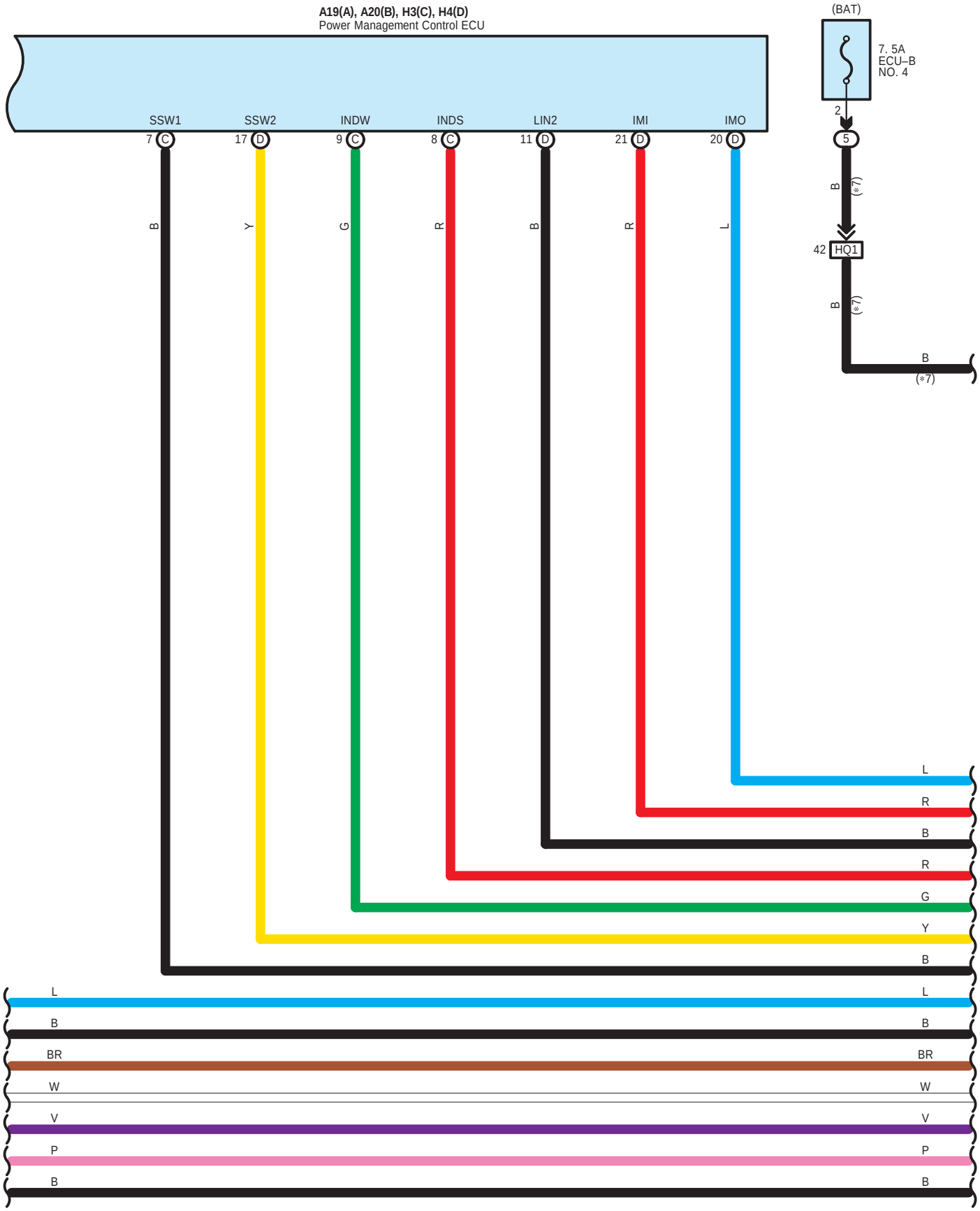
A19(A), A20(B), H3(C), H4(D)
Power Management Control ECU
SSW1
SSW2
INDW
INDS
LIN2
IMI
IMO
7 C
17 D
9 C
8 C
11 D
21 D
20 D
B
Y
G
R
B
R
L
(BAT)
7. 5A
ECU–B
NO. 4
2
5
B
(*7)
42 HQ1
B
(*7)
B
(*7)
L
R
B
R
G
Y
B
L
B
BR
W
V
P
B
L
B
BR
W
V
P
B

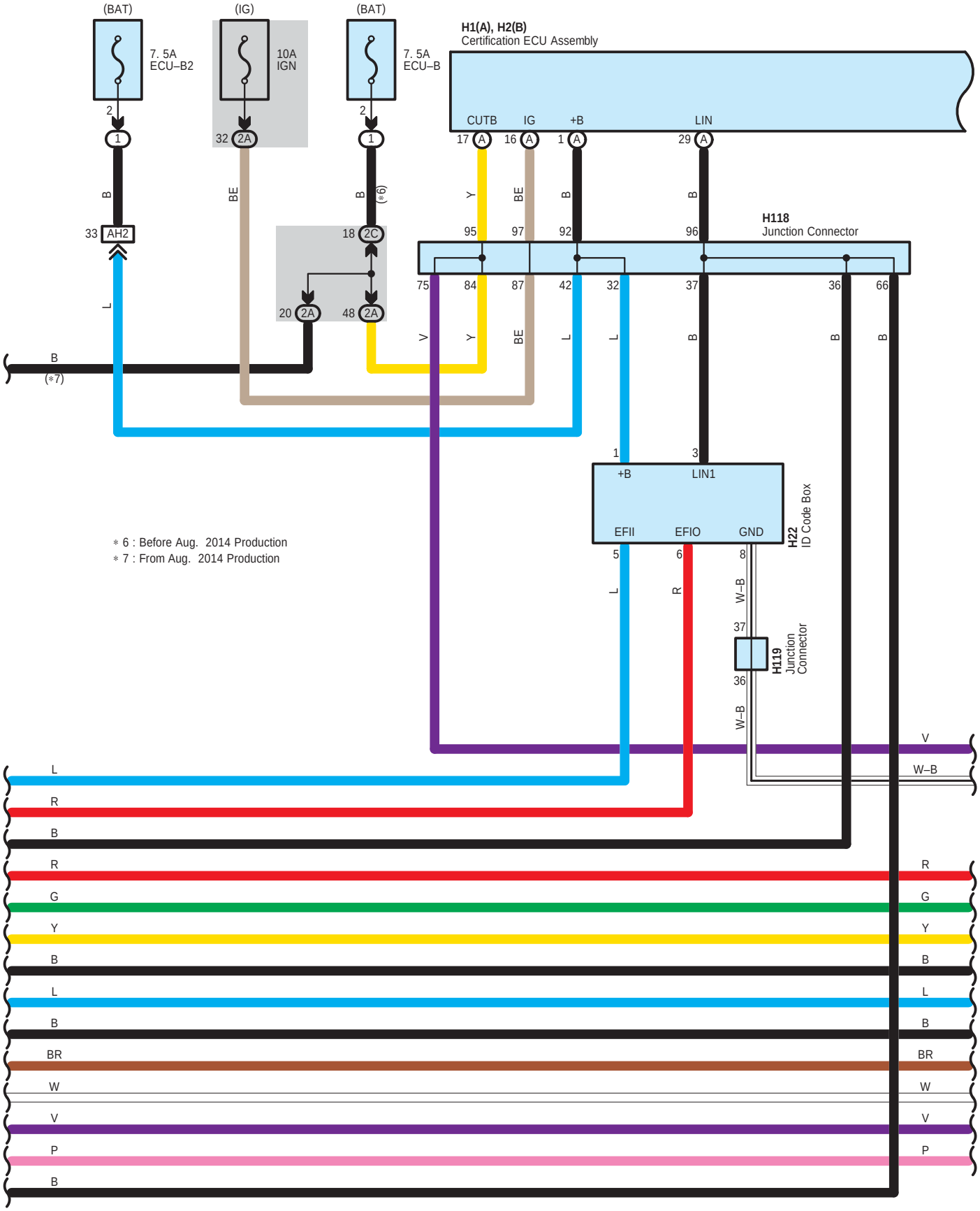
(BAT)
7. 5A
ECU–B2
(IG)
10A
IGN
(BAT)
7. 5A
ECU–B
H1(A), H2(B)
Certification ECU Assembly
CUTB
IG
+B
LIN
H118
Junction Connector
AH2
2A
2C
H22
ID Code Box
+B
LIN1
EFII
EFIO
GND
H119
Junction
Connector
∗ 6 : Before Aug. 2014 Production
∗ 7 : From Aug. 2014 Production

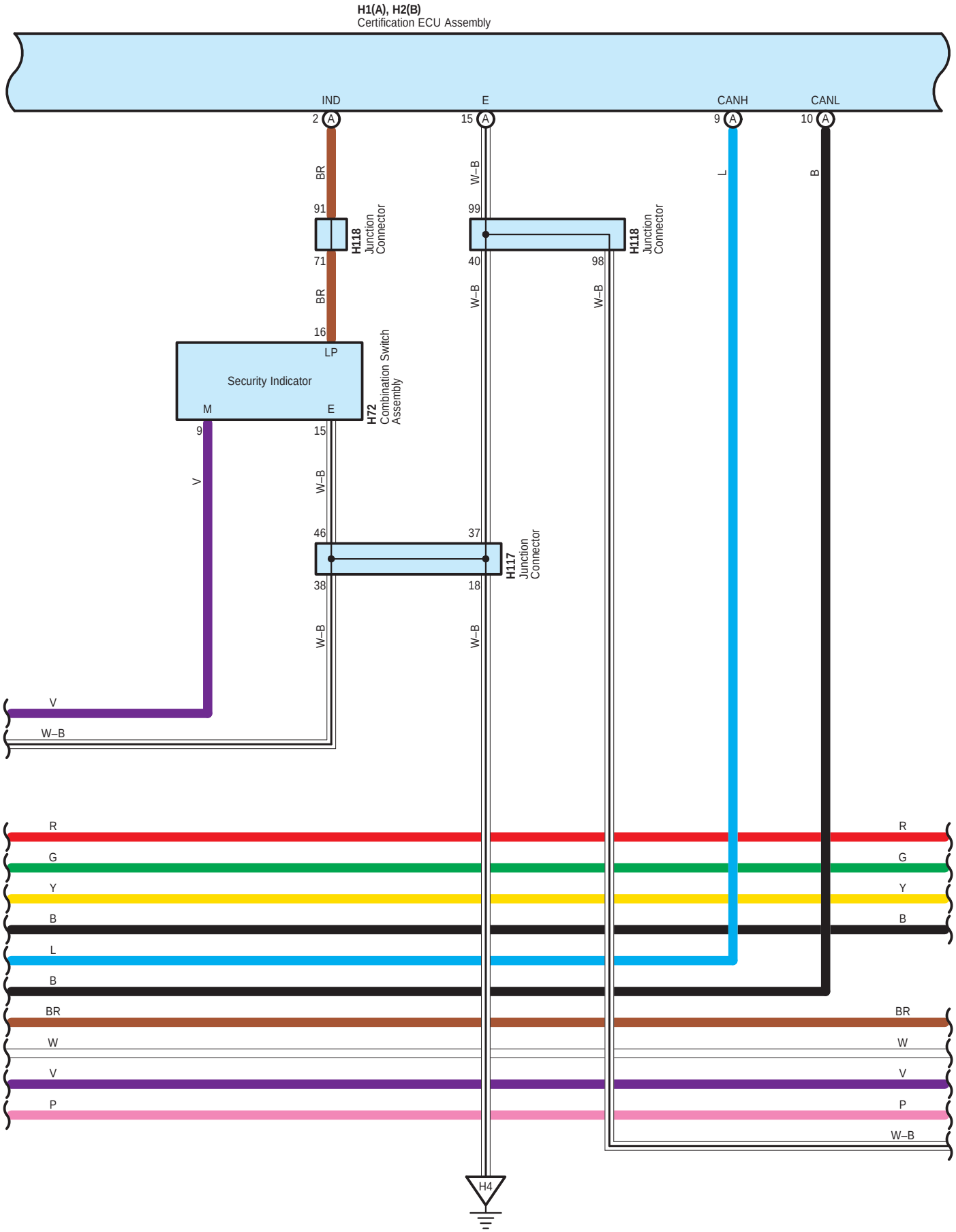
H1(A), H2(B)
Certification ECU Assembly
IND
E
CANH
CANL
2 A
15 A
9 A
10 A
BR
W–B
L
B
91
99
H118 Junction Connector
71
40
98
BR
W–B
W–B
16
LP
Security Indicator
M
E
H72 Combination Switch Assembly
9
15
V
W–B
46
37
H117 Junction Connector
38
18
W–B
W–B
V
W–B
R
G
Y
B
L
B
BR
W
V
P
R
G
Y
B
BR
W
V
P
W–B
H4

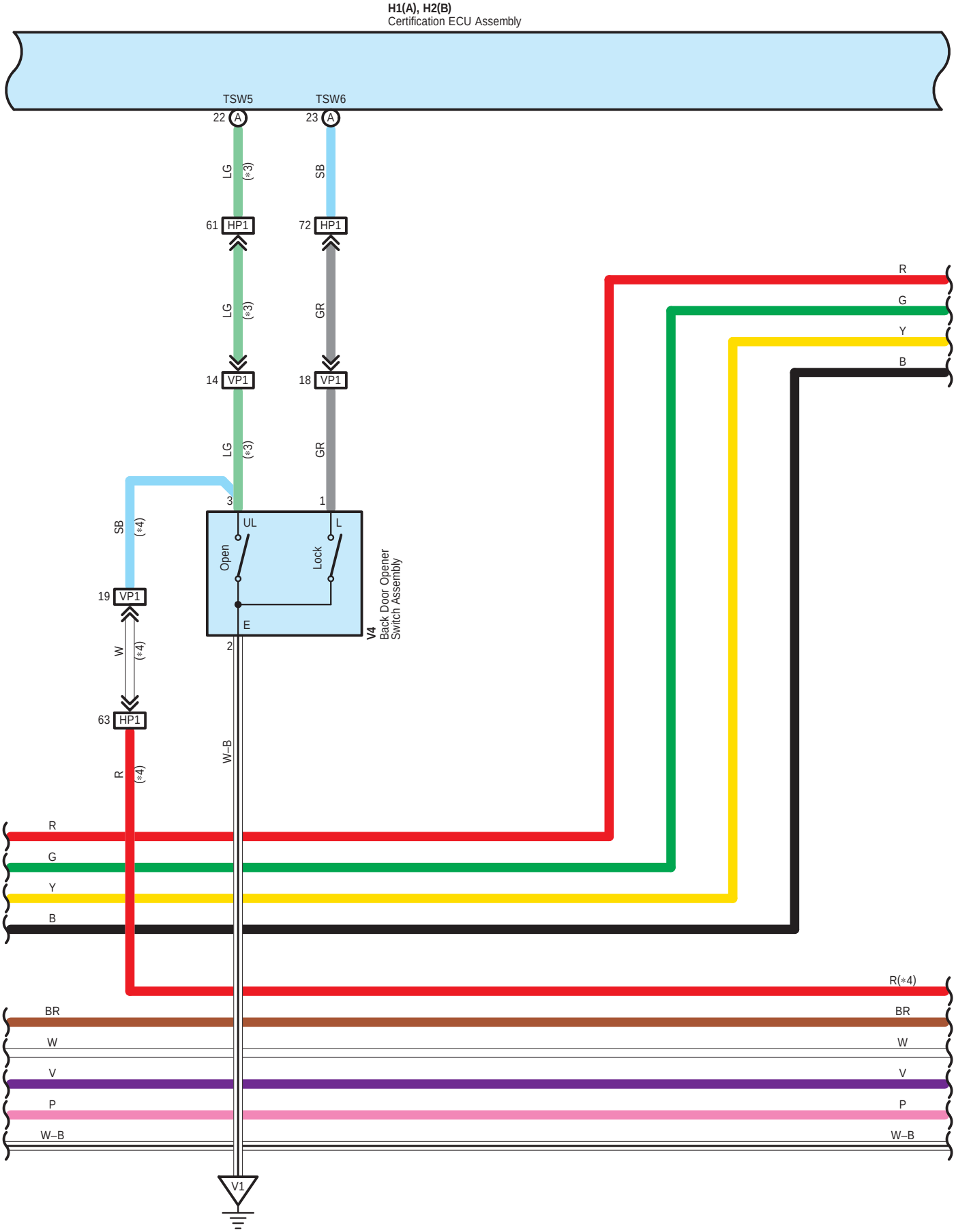
H1(A), H2(B)
Certification ECU Assembly
TSW5
TSW6
22 A
23 A
LG
(*3)
SB
61 HP1
72 HP1
LG
(*3)
GR
14 VP1
18 VP1
LG
(*3)
GR
3
1
SB
(*4)
UL
L
Open
Lock
E
V4
Back Door Opener
Switch Assembly
19 VP1
W
(*4)
2
63 HP1
R
(*4)
W–B
R
G
Y
B
R(*4)
BR
W
V
P
W–B
V1

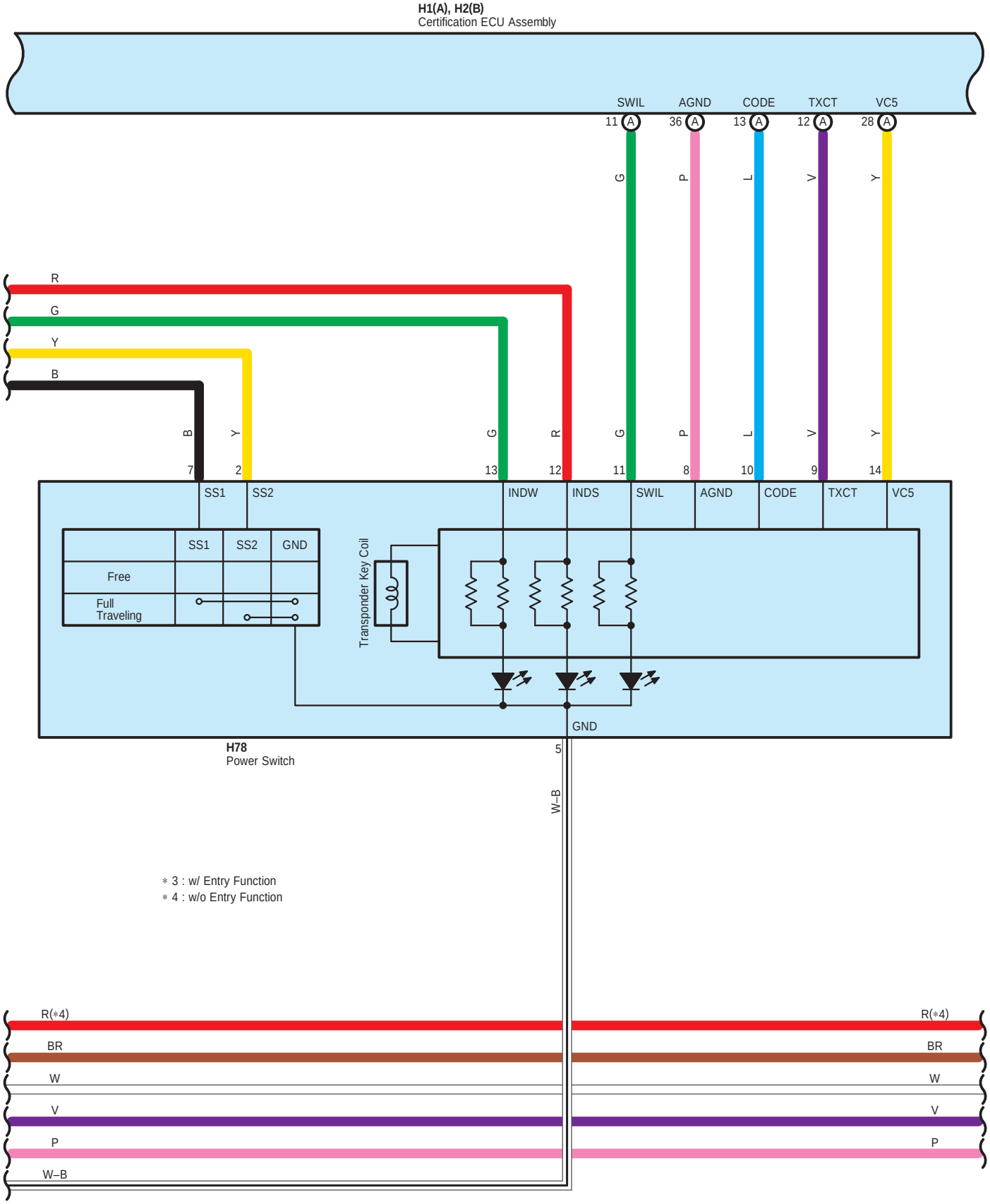
H1(A), H2(B)
Certification ECU Assembly
SWIL
AGND
CODE
TXCT
VC5
11 A
36 A
13 A
12 A
28 A
G
P
L
V
Y
R
G
Y
B
B
Y
G
R
G
P
L
V
Y
7
2
13
12
11
8
10
9
14
SS1
SS2
INDW
INDS
SWIL
AGND
CODE
TXCT
VC5
SS1
SS2
GND
Free
Full Traveling
Transponder Key Coil
GND
H78
Power Switch
5
W–B
∗ 3 : w/ Entry Function
∗ 4 : w/o Entry Function
R(∗4)
BR
W
V
P
W–B
R(∗4)
BR
W
V
P

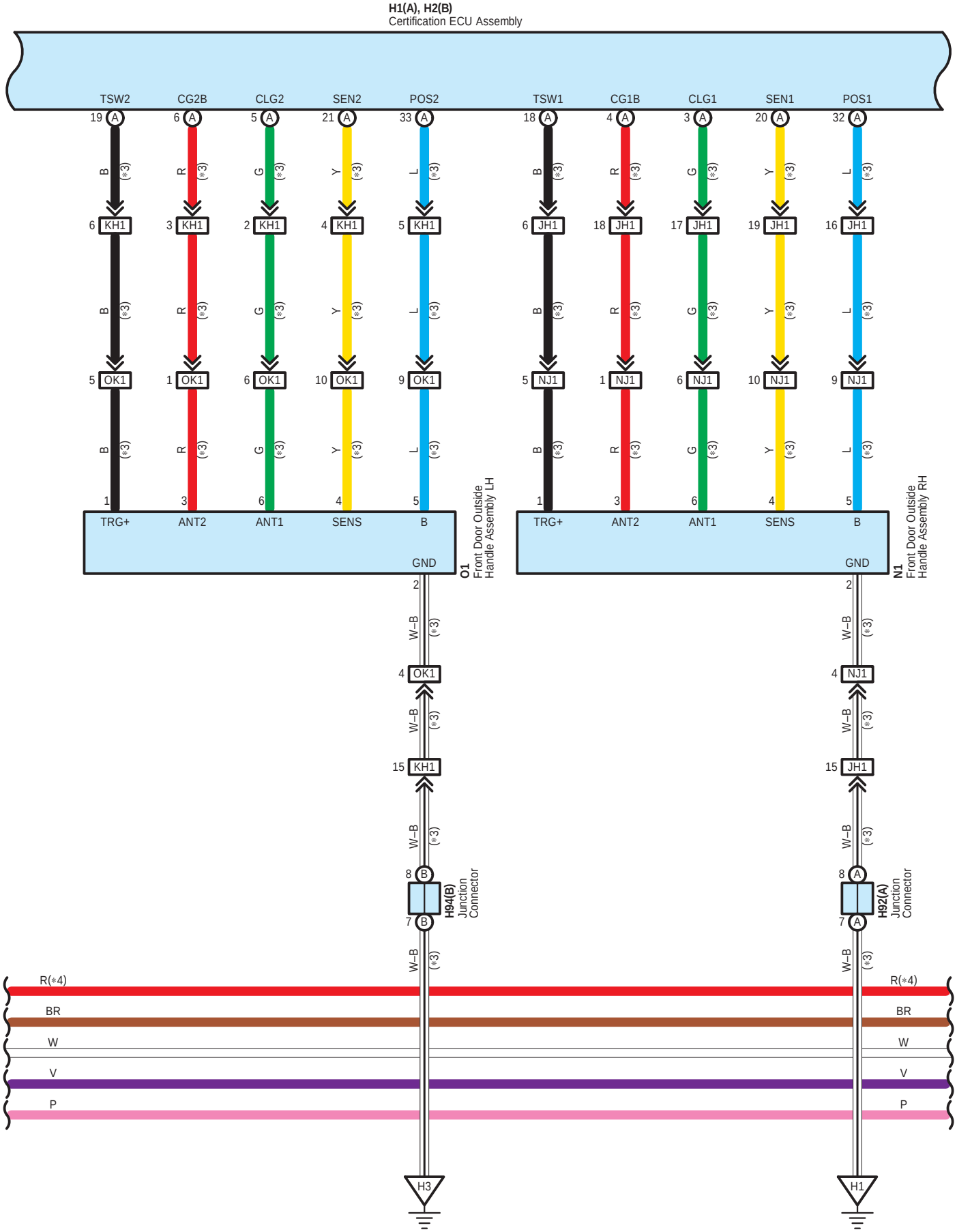
H1(A), H2(B)
Certification ECU Assembly
TSW2
CG2B
CLG2
SEN2
POS2
TSW1
CG1B
CLG1
SEN1
POS1
TRG+
ANT2
ANT1
SENS
B
GND
O1
Front Door Outside Handle Assembly LH
N1
Front Door Outside Handle Assembly RH
KH1
JH1
OK1
NJ1
H94(B)
Junction Connector
H92(A)
Junction Connector
R(*4)
BR
W
V
P
H3
H1

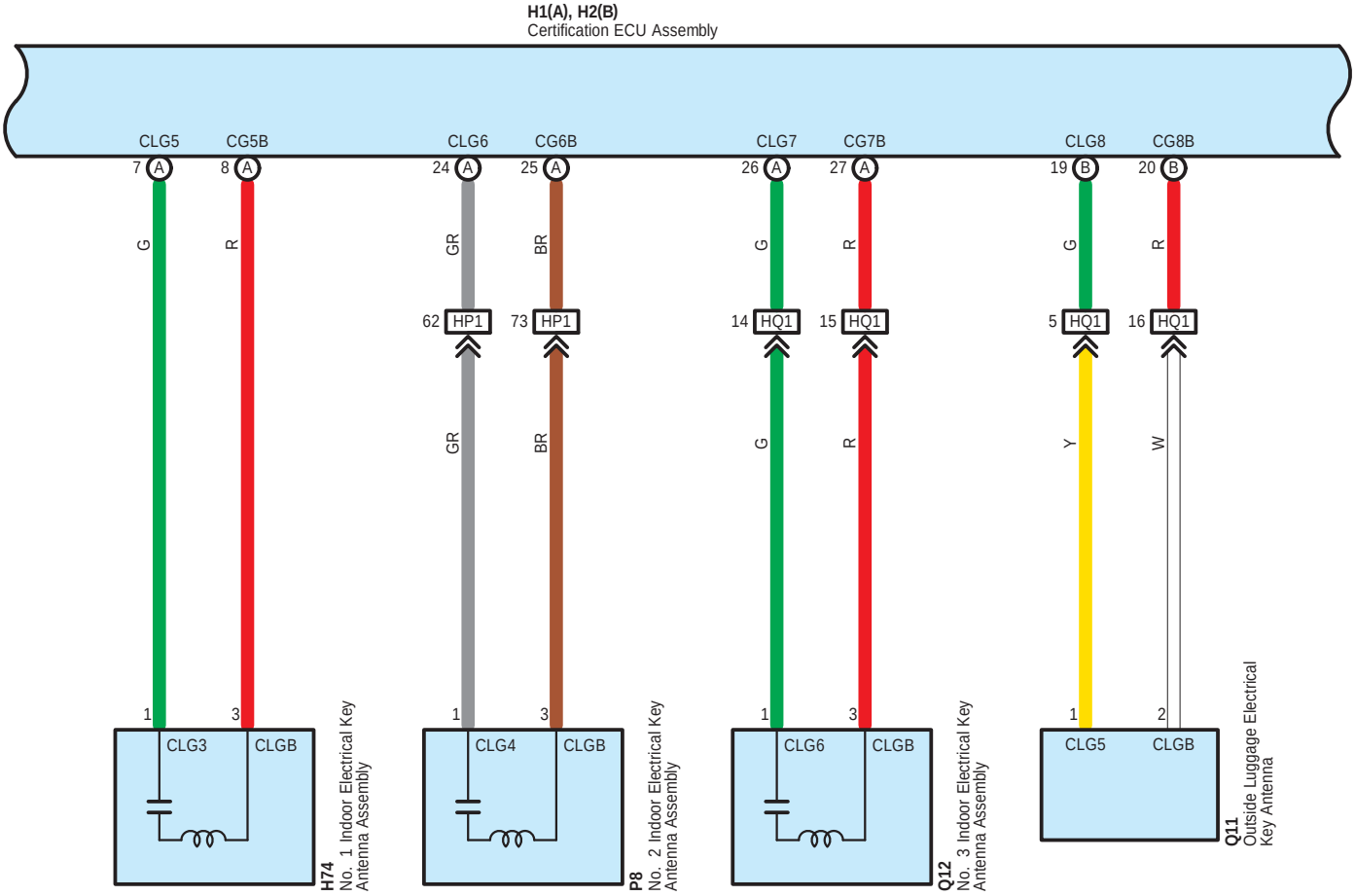

∗ 3 : w/ Entry Function
∗ 4 : w/o Entry Function

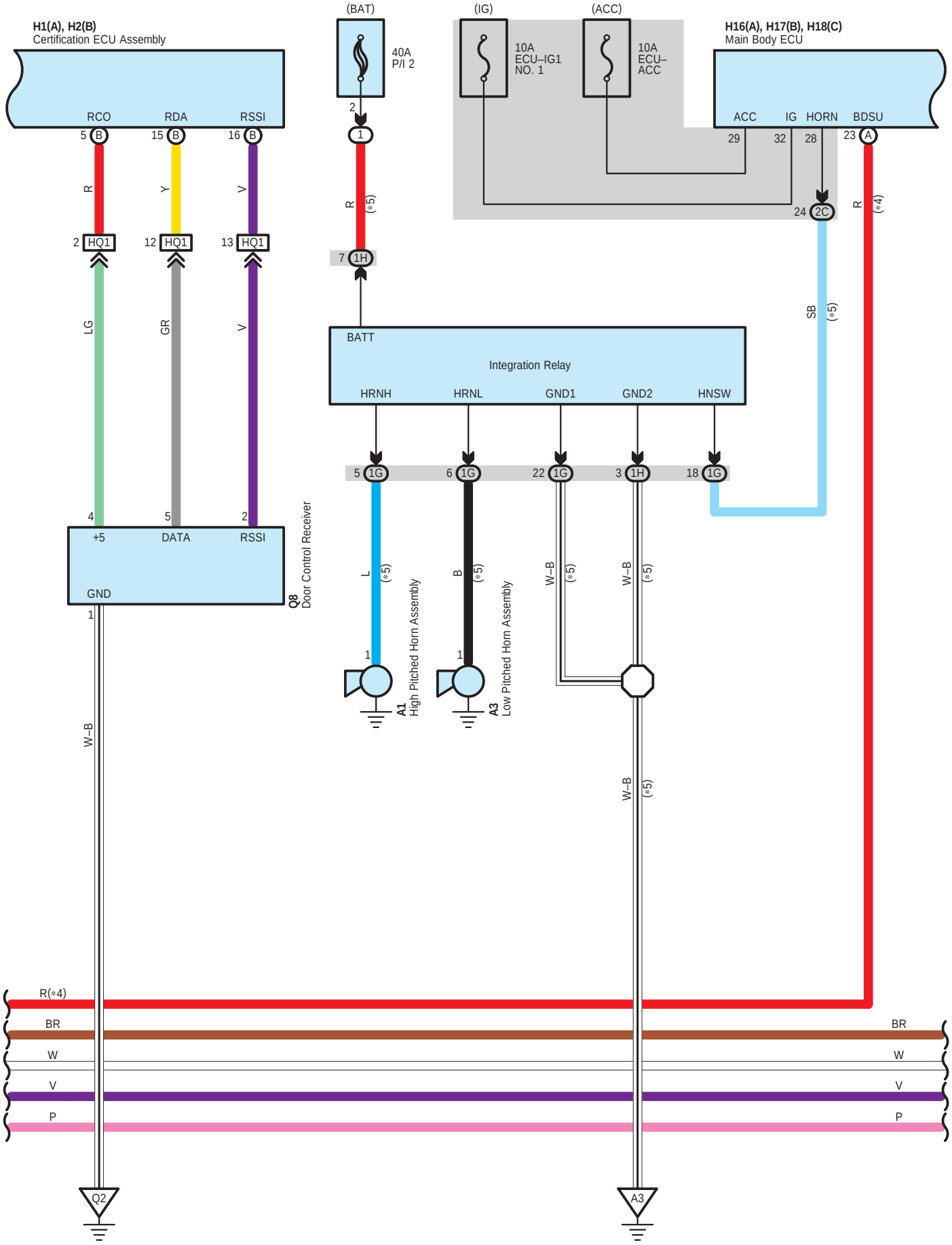
H1(A), H2(B)
Certification ECU Assembly
RCO
RDA
RSSI
5 B
15 B
16 B
R
Y
V
2 HQ1
12 HQ1
13 HQ1
LG
GR
V
4
5
2
+5
DATA
RSSI
GND
1
Q8
Door Control Receiver
W–B
(BAT)
40A
P/I 2
2
1
R
(*5)
7 1H
BATT
Integration Relay
HRNH
HRNL
GND1
GND2
HNSW
5 1G
6 1G
22 1G
3 1H
18 1G
L
(*5)
B
(*5)
W–B
(*5)
W–B
(*5)
1
1
A1
High Pitched Horn Assembly
A3
Low Pitched Horn Assembly
W–B
(*5)
(IG)
10A
ECU–IG1
NO. 1
(ACC)
10A
ECU–
ACC
H16(A), H17(B), H18(C)
Main Body ECU
ACC
IG
HORN
BDSU
29
32
28
23 A
24 2C
R
(*4)
SB
(*5)
R(*4)
BR
W
V
P
BR
W
V
P
Q2
A3

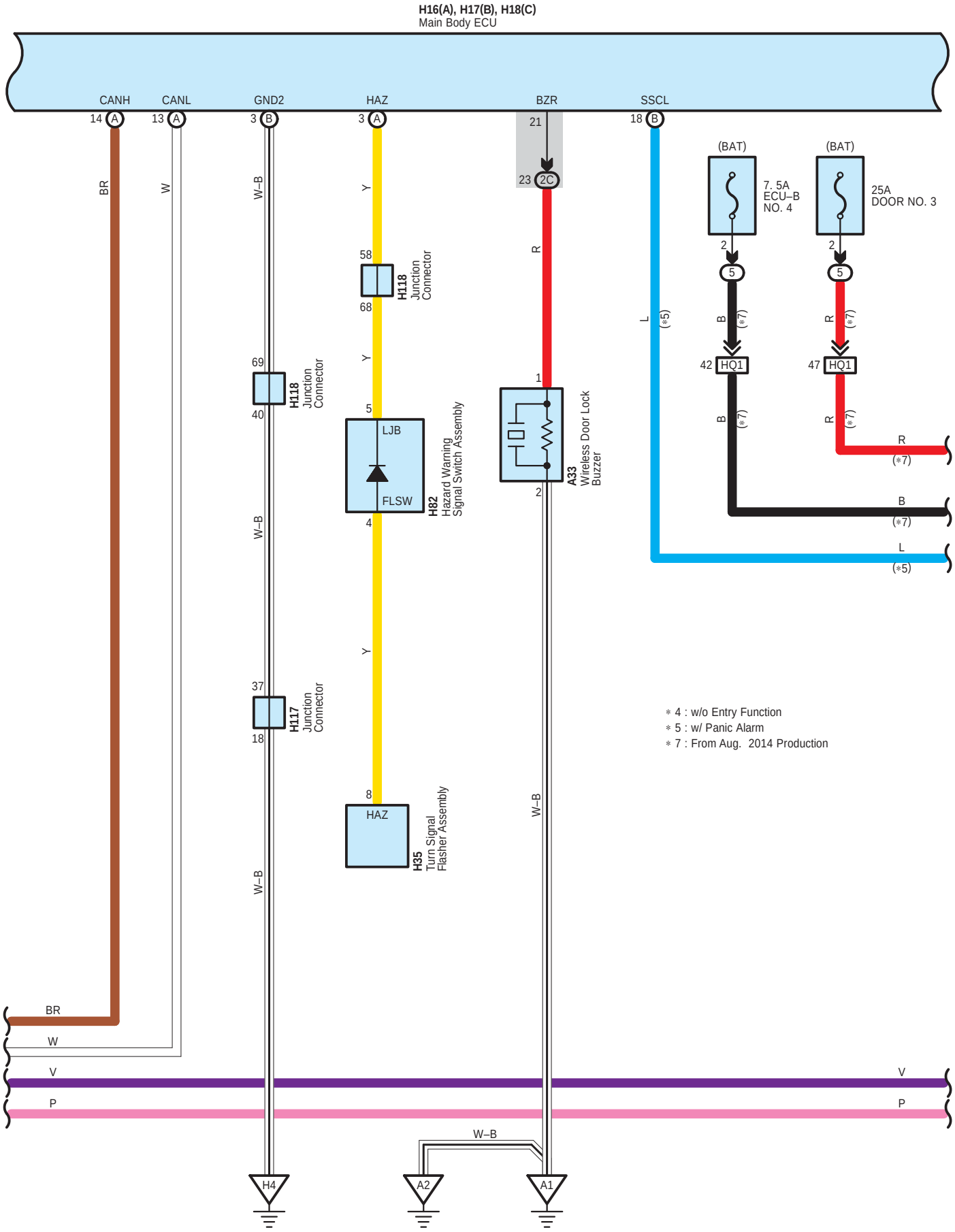
H16(A), H17(B), H18(C)
Main Body ECU
CANH
CANL
GND2
HAZ
BZR
SSCL
14 A
13 A
3 B
3 A
21
23 2C
18 B
BR
W
W–B
Y
R
L
(*5)
58
68
H118
Junction
Connector
69
40
H118
Junction
Connector
5
LJB
FLSW
4
H82
Hazard Warning
Signal Switch Assembly
1
2
A33
Wireless Door Lock
Buzzer
37
18
H117
Junction
Connector
8
HAZ
H35
Turn Signal
Flasher Assembly
(BAT)
7. 5A
ECU–B
NO. 4
(BAT)
25A
DOOR NO. 3
2
5
B
(*7)
42 HQ1
47 HQ1
R
(*7)
B
(*7)
L
(*5)
∗ 4 : w/o Entry Function
∗ 5 : w/ Panic Alarm
∗ 7 : From Aug. 2014 Production
V
P
H4
A2
A1

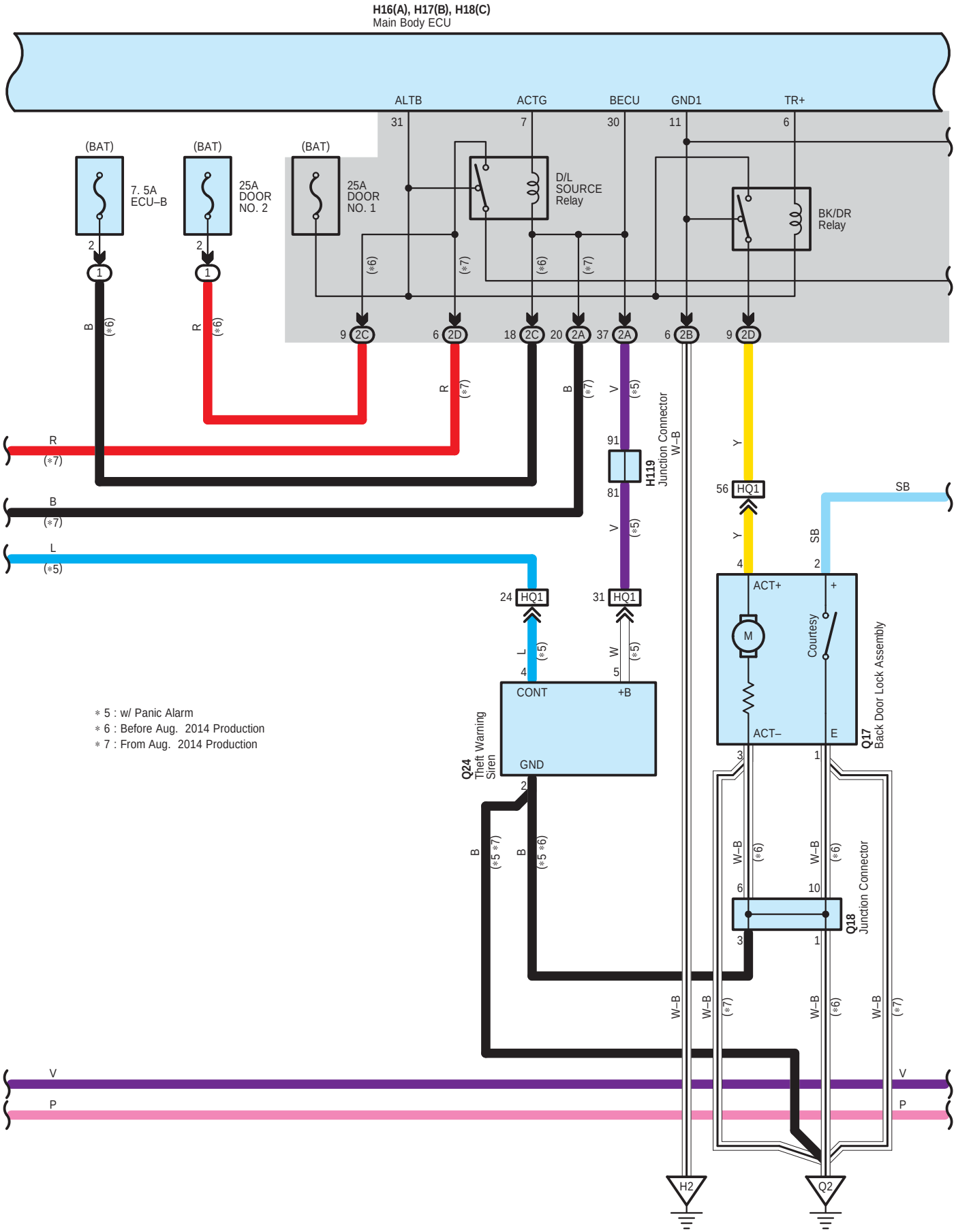
H16(A), H17(B), H18(C)
Main Body ECU
ALTB
ACTG
BECU
GND1
TR+
31
7
30
11
6
(BAT)
7. 5A
ECU–B
25A
DOOR
NO. 2
25A
DOOR
NO. 1
D/L
SOURCE
Relay
BK/DR
Relay
9 2C
6 2D
18 2C
20 2A
37 2A
6 2B
9 2D
H119
Junction Connector
W–B
91
81
56 HQ1
24 HQ1
31 HQ1
CONT
+B
GND
Q24
Theft Warning
Siren
ACT+
ACT–
Courtesy
Q17
Back Door Lock Assembly
Q18
Junction Connector
H2
Q2
∗ 5 : w/ Panic Alarm
∗ 6 : Before Aug. 2014 Production
∗ 7 : From Aug. 2014 Production

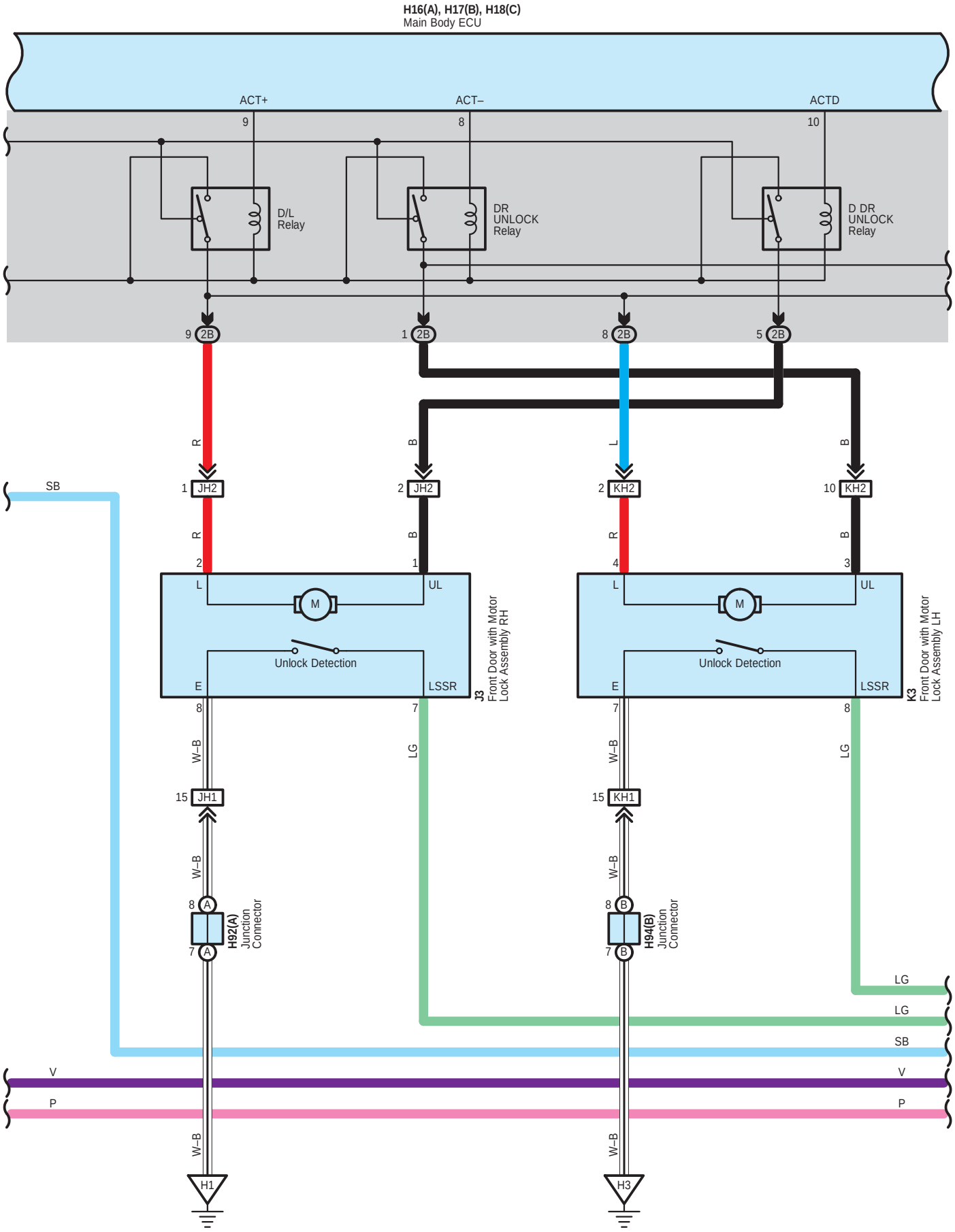
H16(A), H17(B), H18(C)
Main Body ECU
ACT+
ACT–
ACTD
9
8
10
D/L Relay
DR UNLOCK Relay
D DR UNLOCK Relay
9 2B
1 2B
8 2B
5 2B
R
B
L
B
SB
1 JH2
2 JH2
2 KH2
10 KH2
R
B
R
B
2
1
4
3
L
UL
M
Unlock Detection
E
LSSR
J3 Front Door with Motor Lock Assembly RH
K3 Front Door with Motor Lock Assembly LH
8
7
7
8
W–B
LG
W–B
LG
15 JH1
15 KH1
W–B
W–B
8 A
7 A
H92(A) Junction Connector
8 B
7 B
H94(B) Junction Connector
LG
LG
SB
V
V
P
P
W–B
W–B
H1
H3

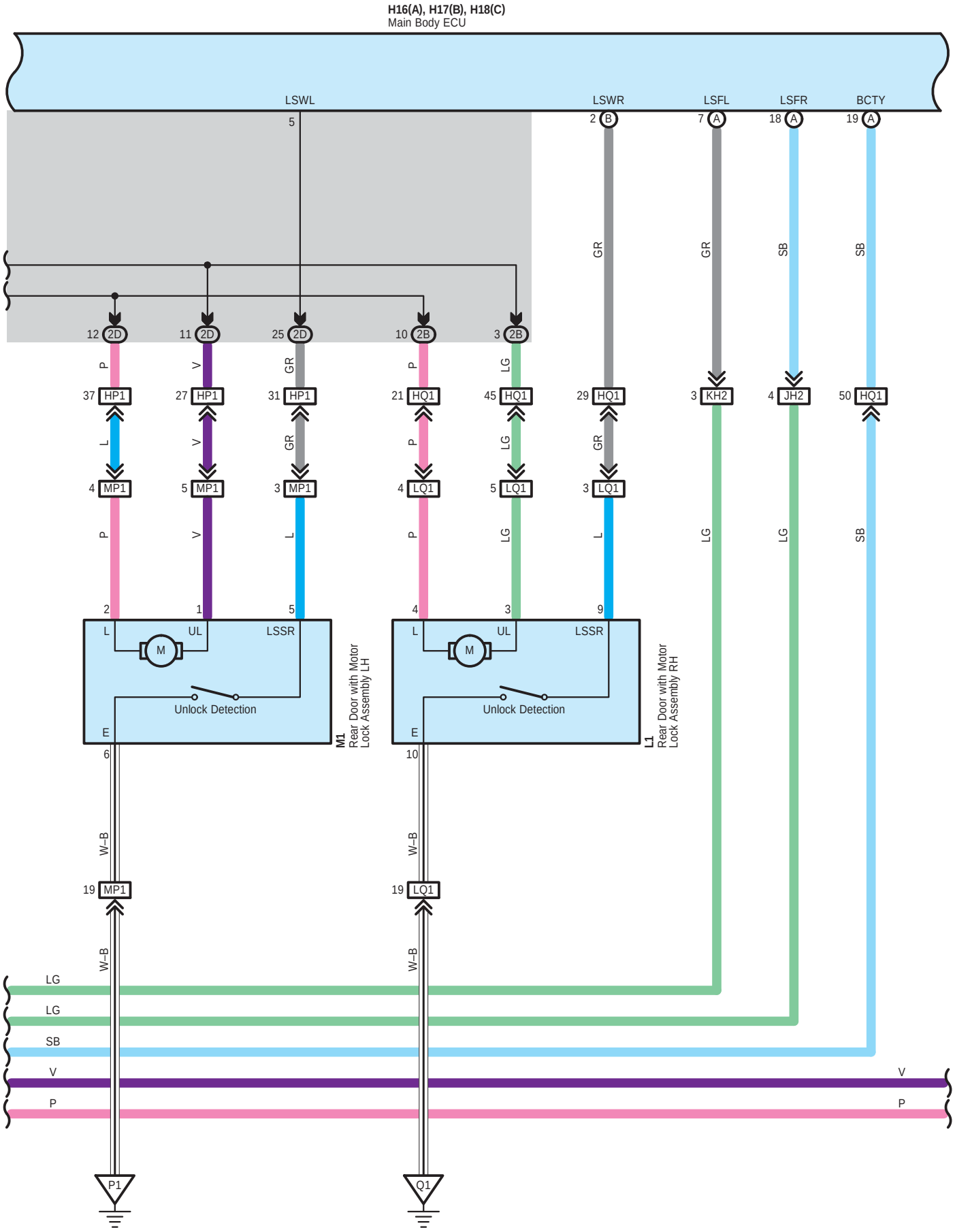
H16(A), H17(B), H18(C)
Main Body ECU
LSWL
LSWR
LSFL
LSFR
BCTY
5
2 B
7 A
18 A
19 A
GR
GR
SB
SB
12 2D
11 2D
25 2D
10 2B
3 2B
P
V
GR
P
LG
37 HP1
27 HP1
31 HP1
21 HQ1
45 HQ1
29 HQ1
3 KH2
4 JH2
50 HQ1
L
V
GR
P
LG
GR
4 MP1
5 MP1
3 MP1
4 LQ1
5 LQ1
3 LQ1
P
V
L
P
LG
L
LG
LG
SB
2
1
5
4
3
9
L
UL
LSSR
M
Unlock Detection
E
M1
Rear Door with Motor Lock Assembly LH
L
UL
LSSR
M
Unlock Detection
E
L1
Rear Door with Motor Lock Assembly RH
6
10
W–B
W–B
19 MP1
19 LQ1
W–B
W–B
LG
LG
SB
V
V
P
P
P1
Q1

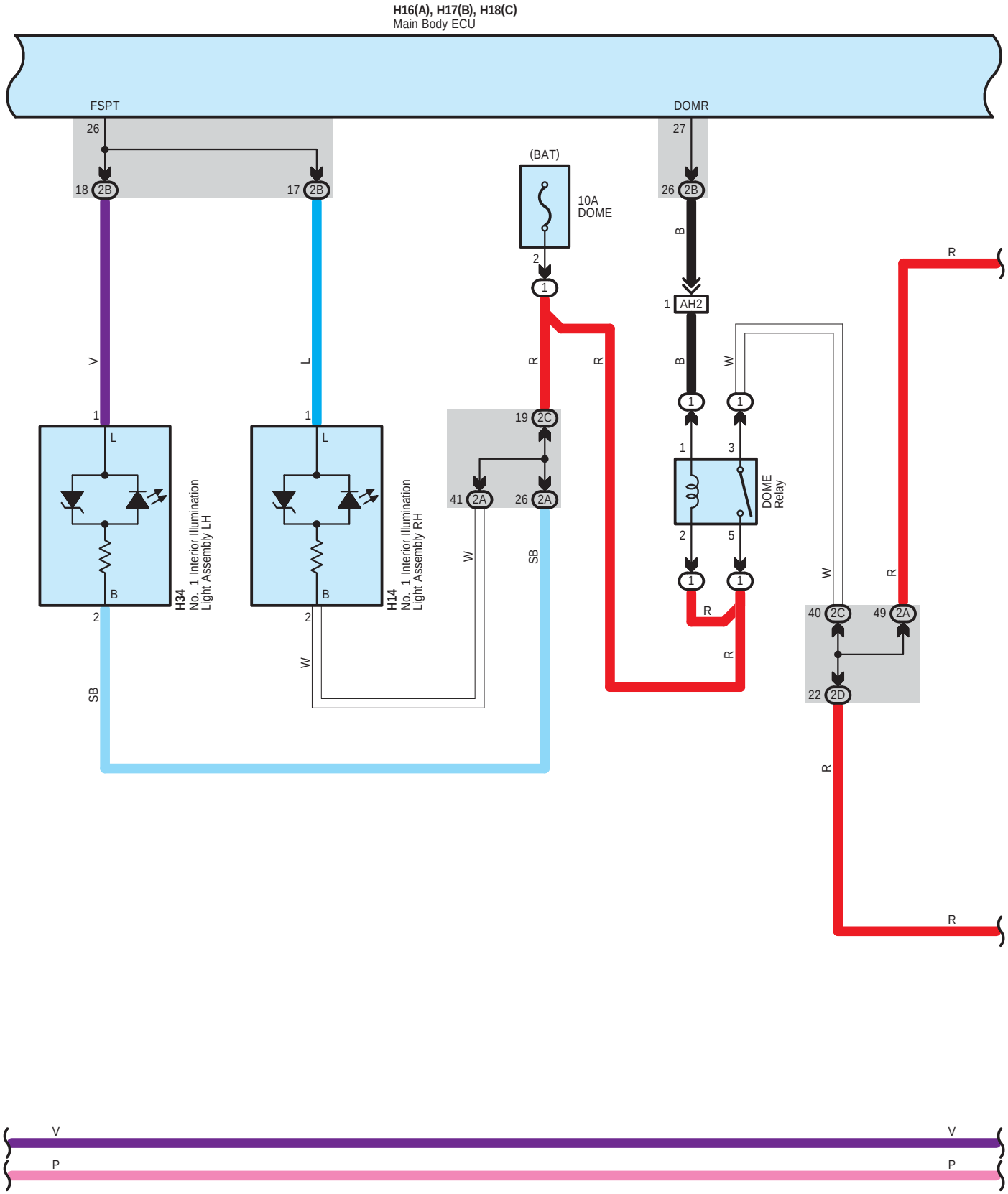
H16(A), H17(B), H18(C)
Main Body ECU
FSPT
DOMR
(BAT)
10A
DOME
AH2
DOME
Relay
H34
No. 1 Interior Illumination
Light Assembly LH
H14
No. 1 Interior Illumination
Light Assembly RH
V
L
R
B
W
SB
P

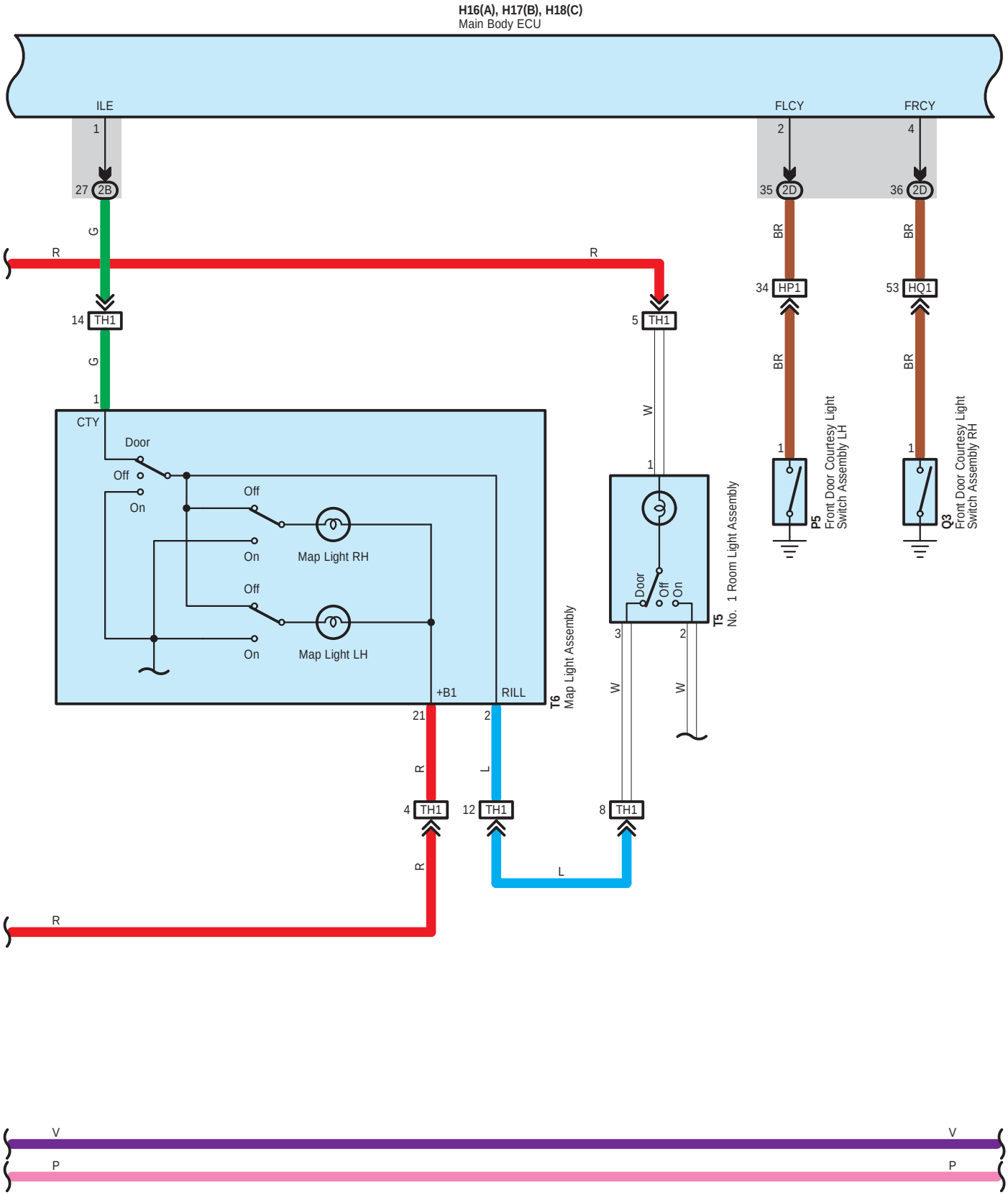
H16(A), H17(B), H18(C)
Main Body ECU
ILE
FLCY
FRCY
1
27 2B
2
35 2D
4
36 2D
G
R
R
BR
BR
34 HP1
53 HQ1
14 TH1
5 TH1
G
BR
BR
1
CTY
Door
Off
On
Off
On
Map Light RH
Off
On
Map Light LH
+B1
RILL
21
2
W
1
Door
Off
On
3
2
T5
No. 1 Room Light Assembly
T6
Map Light Assembly
W
W
P5
Front Door Courtesy Light Switch Assembly LH
Q3
Front Door Courtesy Light Switch Assembly RH
R
L
4 TH1
12 TH1
8 TH1
R
L
R
V
V
P
P

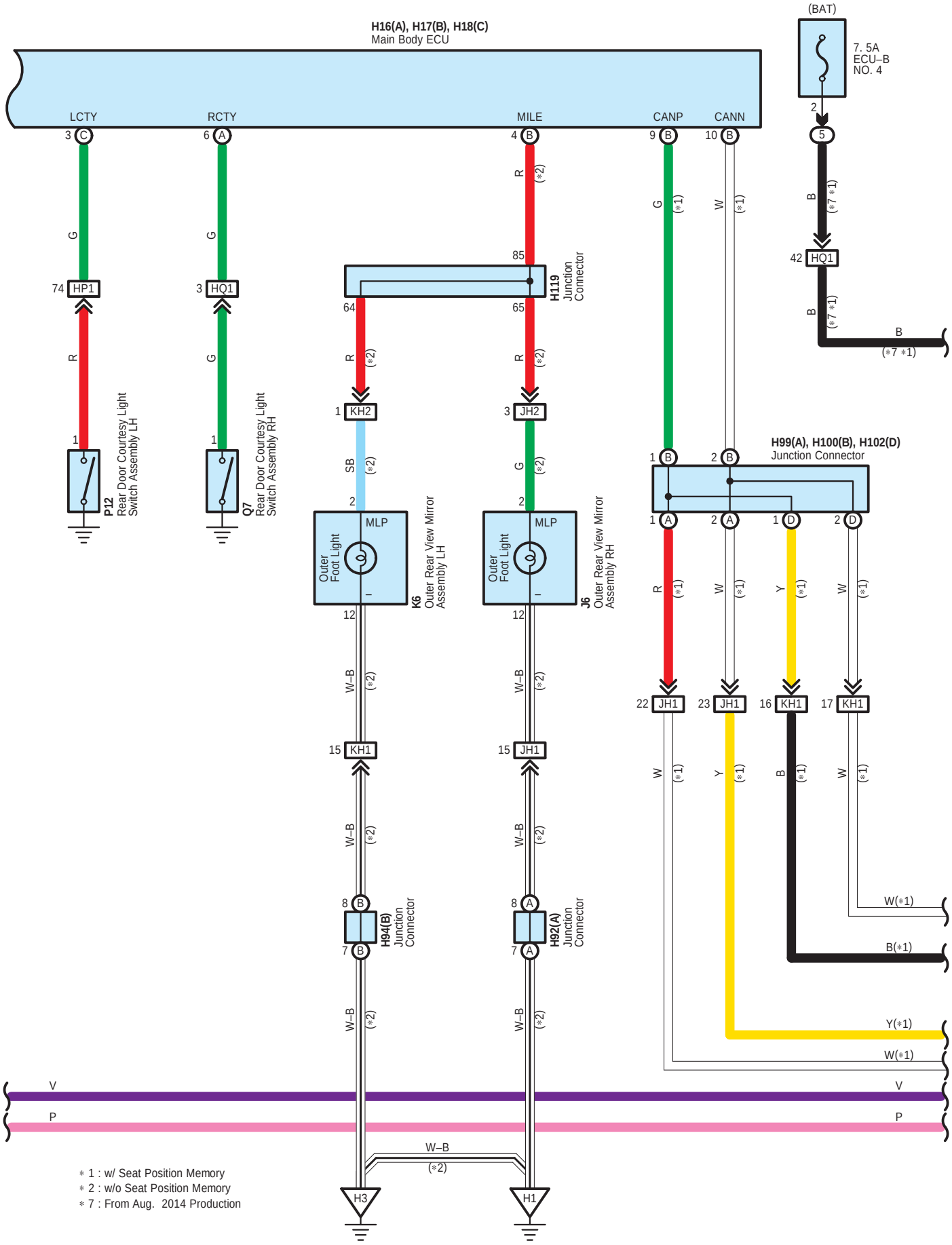
H16(A), H17(B), H18(C)
Main Body ECU
LCTY
RCTY
MILE
CANP
CANN
(BAT)
7. 5A
ECU–B
NO. 4
H119
Junction
Connector
H99(A), H100(B), H102(D)
Junction Connector
P12
Rear Door Courtesy Light
Switch Assembly LH
Q7
Rear Door Courtesy Light
Switch Assembly RH
K6
Outer Rear View Mirror
Assembly LH
J6
Outer Rear View Mirror
Assembly RH
Outer
Foot Light
MLP
H94(B)
Junction
Connector
H92(A)
Junction
Connector
HP1
HQ1
KH2
JH2
KH1
JH1
H3
H1
W(∗1)
B(∗1)
Y(∗1)
∗ 1 : w/ Seat Position Memory
∗ 2 : w/o Seat Position Memory
∗ 7 : From Aug. 2014 Production

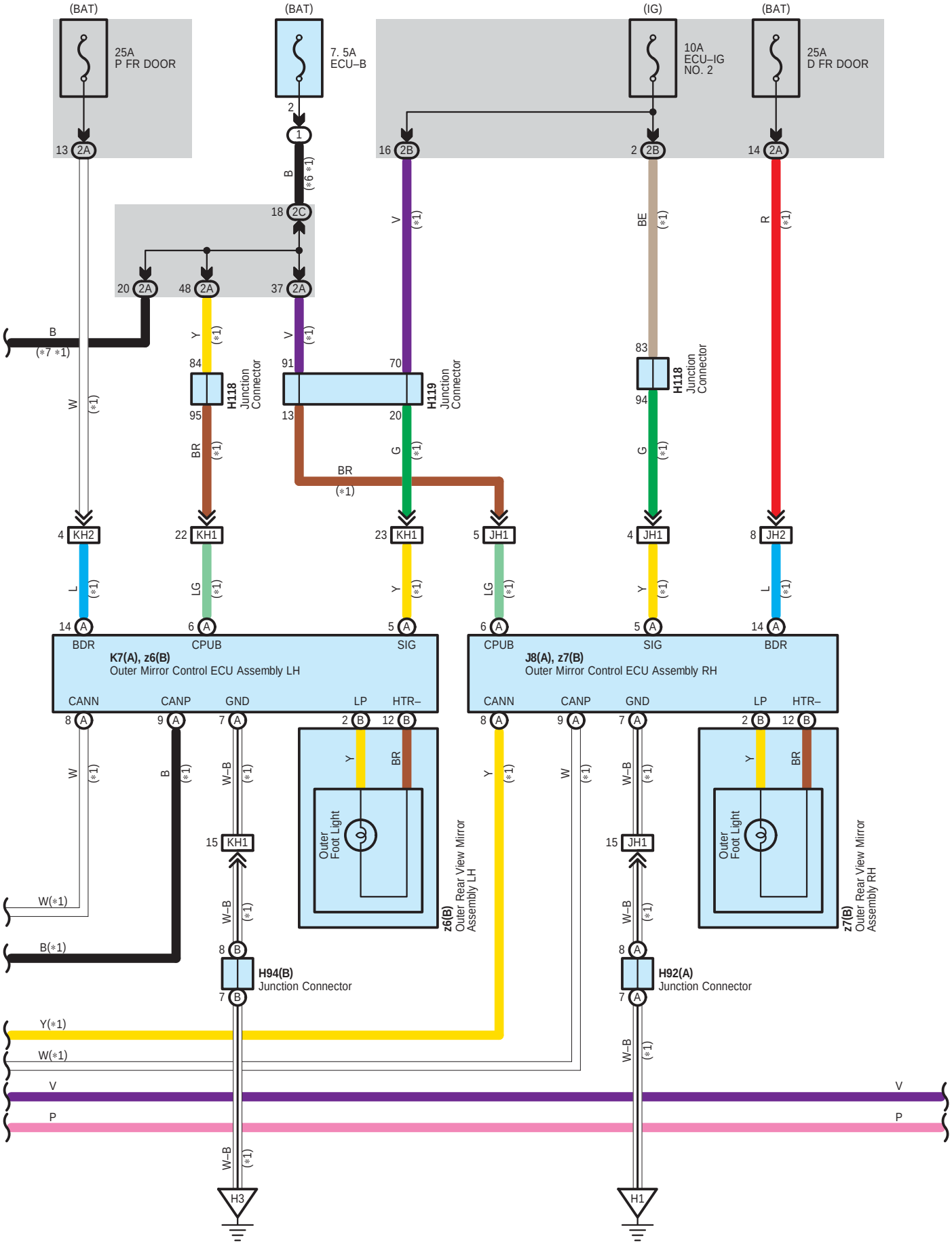
(BAT)
25A
P FR DOOR
(BAT)
7. 5A
ECU–B
(IG)
10A
ECU–IG
NO. 2
(BAT)
25A
D FR DOOR
H118
Junction
Connector
H119
Junction
Connector
H118
Junction
Connector
K7(A), z6(B)
Outer Mirror Control ECU Assembly LH
J8(A), z7(B)
Outer Mirror Control ECU Assembly RH
Outer
Foot Light
z6(B)
Outer Rear View Mirror
Assembly LH
z7(B)
Outer Rear View Mirror
Assembly RH
H94(B)
Junction Connector
H92(A)
Junction Connector
H3
H1

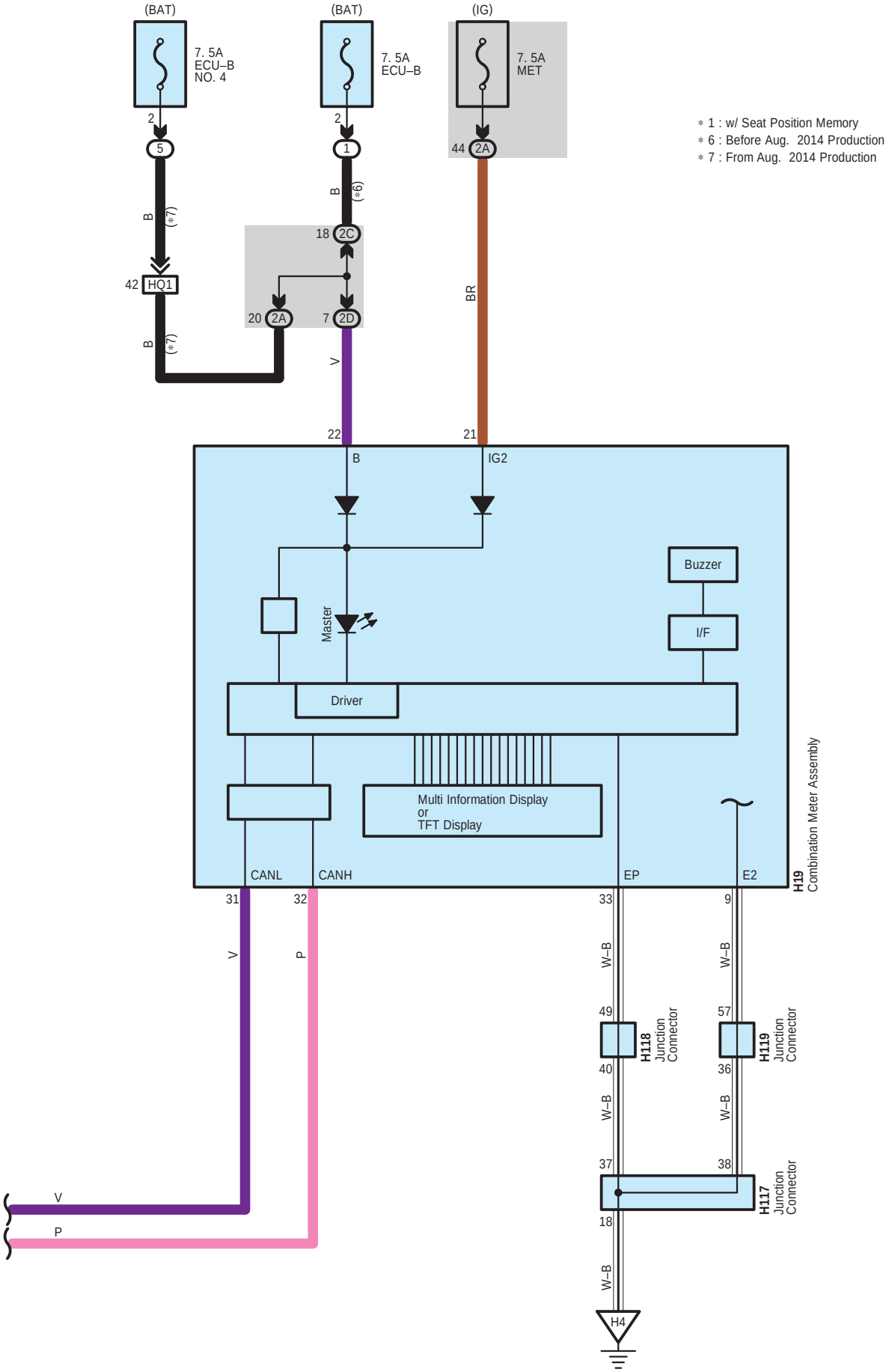
(BAT)
7. 5A
ECU–B
NO. 4
(BAT)
7. 5A
ECU–B
(IG)
7. 5A
MET
* 1 : w/ Seat Position Memory
* 6 : Before Aug. 2014 Production
* 7 : From Aug. 2014 Production
2
5
B
(*7)
42
HQ1
B
(*7)
2
1
B
(*6)
18
2C
20
2A
7
2D
V
44
2A
BR
22
21
B
IG2
Master
Buzzer
I/F
Driver
Multi Information Display
or
TFT Display
CANL
CANH
EP
E2
H19
Combination Meter Assembly
31
32
33
9
V
P
W–B
W–B
49
H118
Junction
Connector
57
H119
Junction
Connector
40
36
W–B
W–B
37
38
H117
Junction
Connector
18
W–B
H4
V
P

A 1
Black

A 3
Black

A 19
Gray

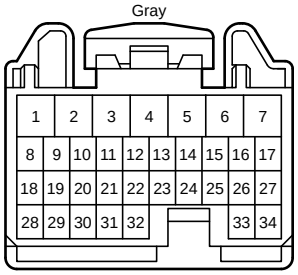

A 20
Gray

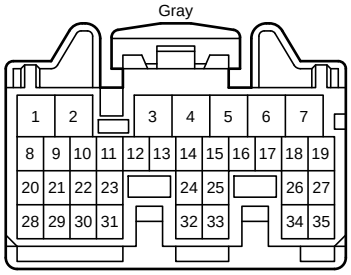

A 21
White

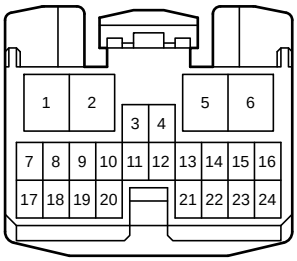

A 22
White

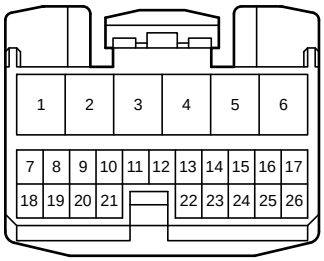

A 33
Gray

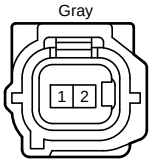

A 50
White

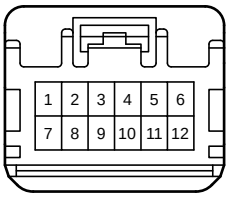

A 51
White

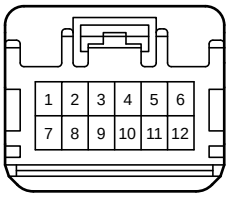

A 52
Black

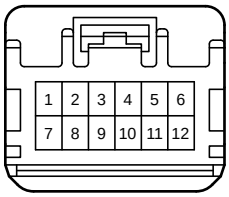

A 53
Black

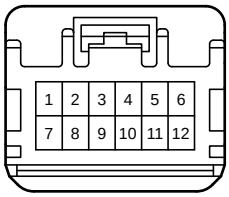

A 56
White

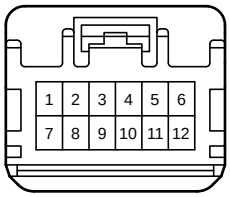

A 60
Black

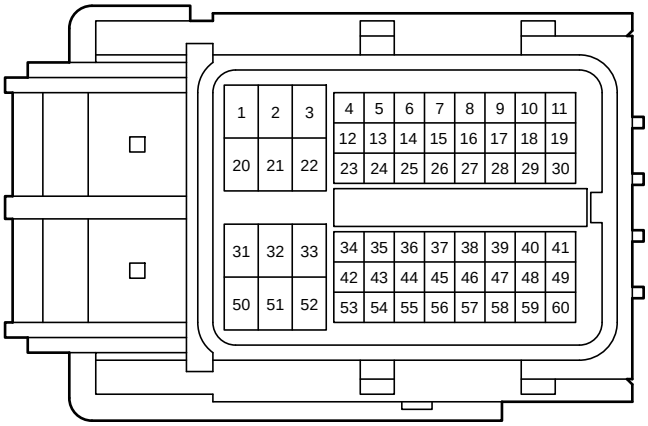

A 71
Gray

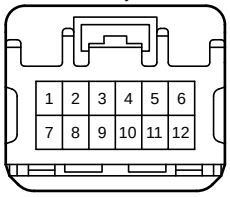

A 72
Blue

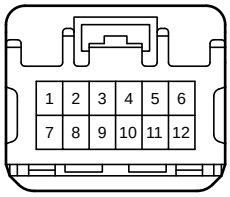

A 74
White

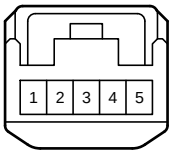

D 2
Black

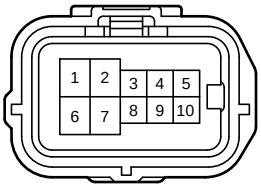

D 26
Black

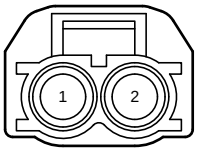

D 27
Black

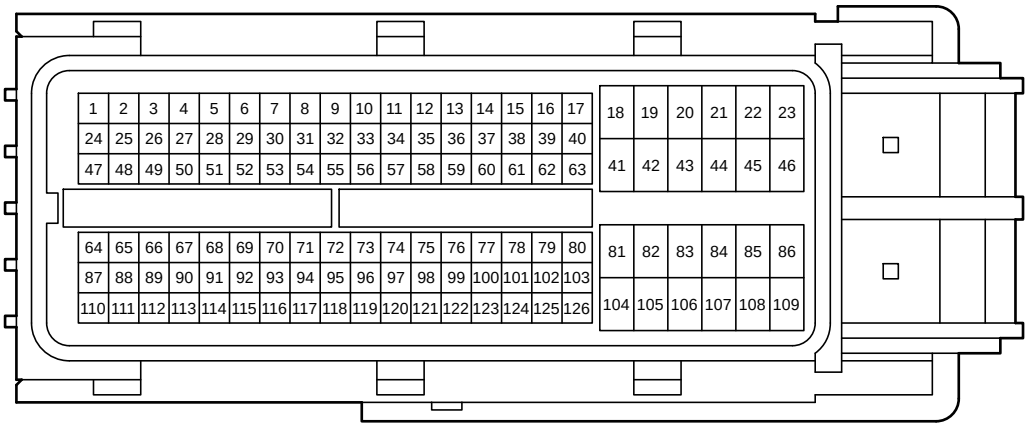

H 1
White

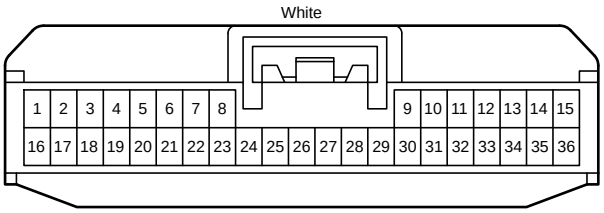

H 2
White

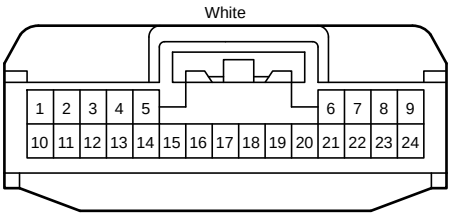

H 3
Gray

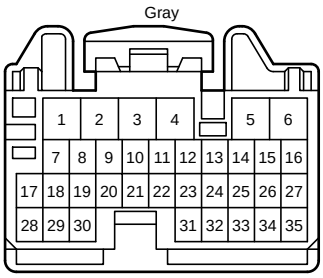

H 4
Gray

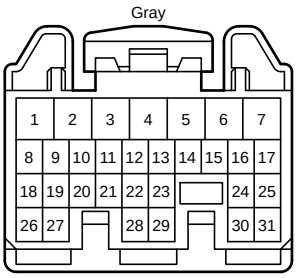

H 14
Gray

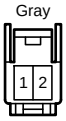

H 16
Black

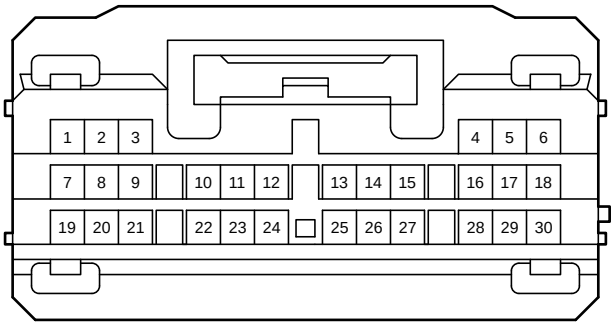

H 17
White

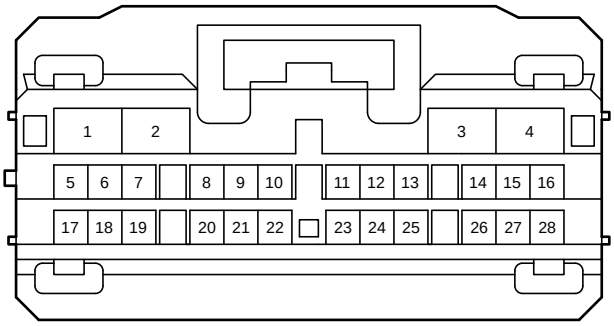

H 18
White

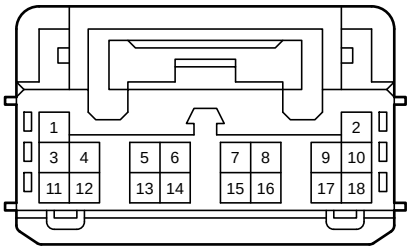

H 19
White

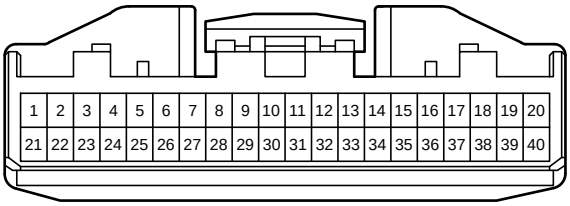

H 22
White

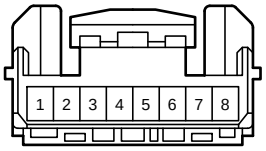

H 34
Gray

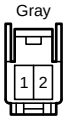

H 35
White

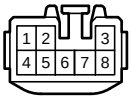

H 72
Black

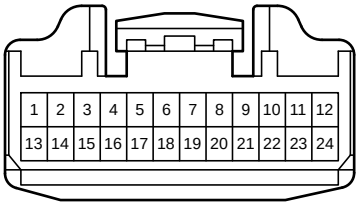

H 74
White

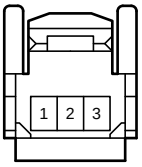

H 76
White

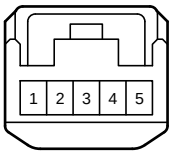

H 77
Black

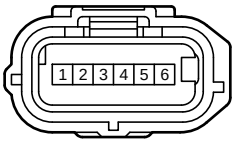

H 78
Black

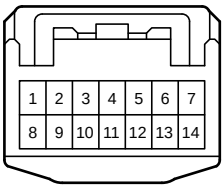

H 81
Black

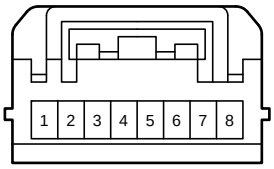

H 82
Black

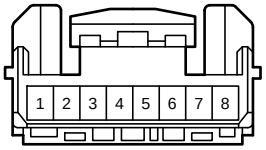

H 92
White

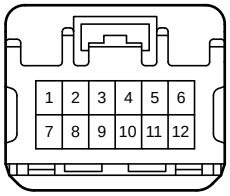

H 94
White

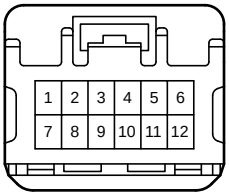

H 95
Gray

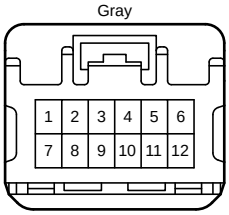

H 97
Black

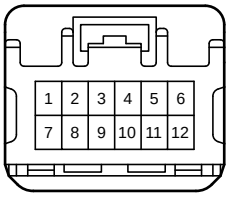

H 98
Black

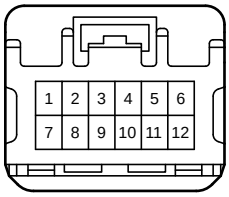

H 99
White

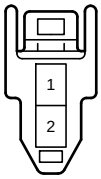

H100
White

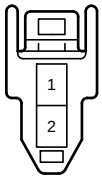

H102
White

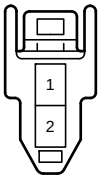

H104
White

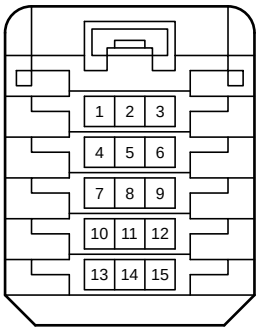

H105
White

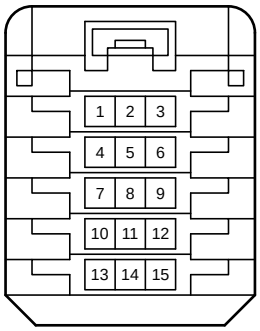

H117
White

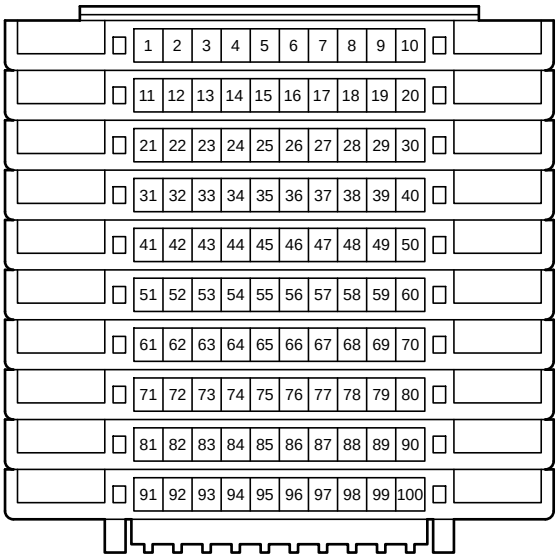

H118
White

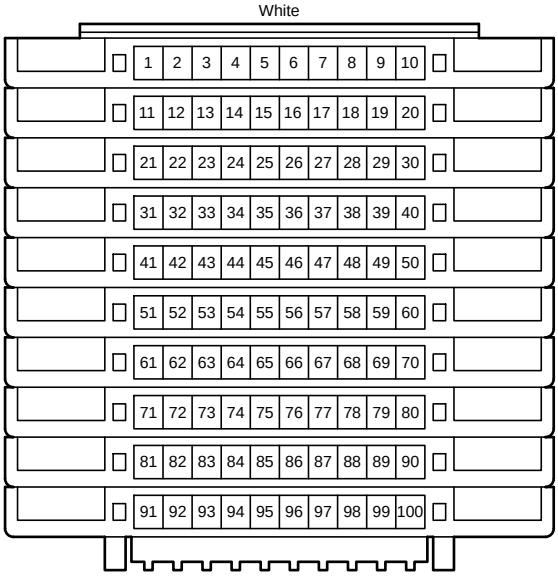

H119
White

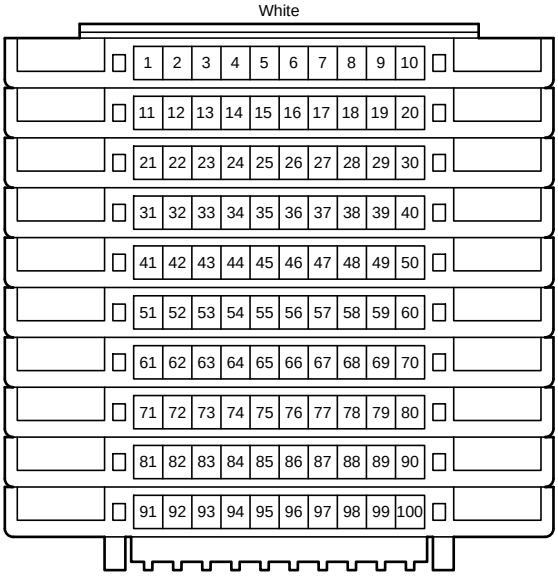

H141
Gray

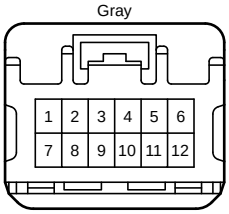

H142
Blue

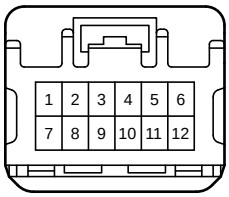

J 3
White

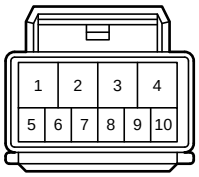

J 6
White

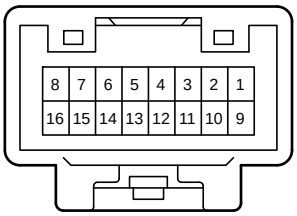

J 8
White

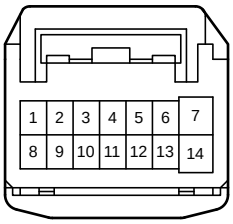

K 3
White

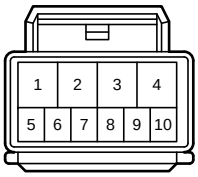

K 6
White

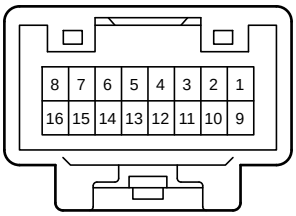

K 7
White

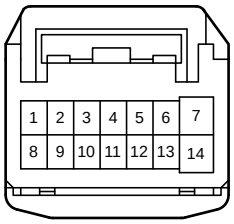

L 1
White

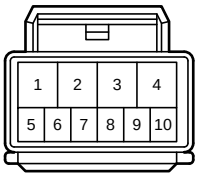

M 1
White

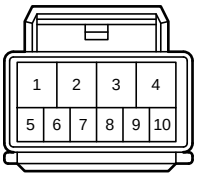

N 1
Gray

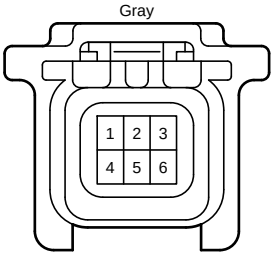

O 1
Gray

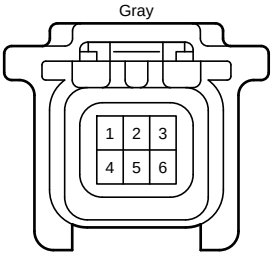

P 5
White

P 8
White

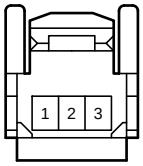

P 12
White

Q 3
White

Q 7
White

Q 8
Blue

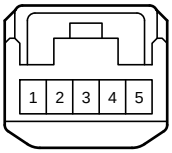

Q 11
White

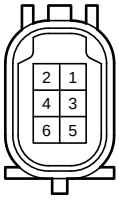

Q 12
White

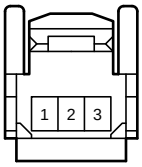

Q 17
White

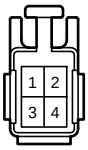

Q 18
White

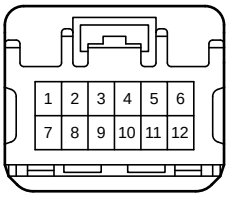

Q 24
Black

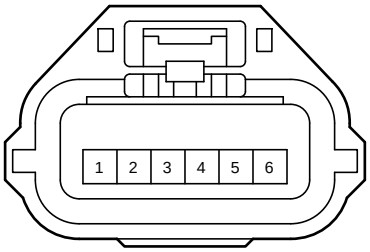

T 5
Gray

T 6
White

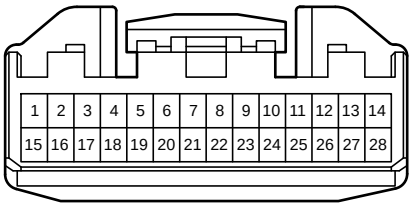

V 4
White

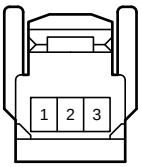

z 6
White

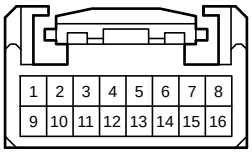

z 7
White

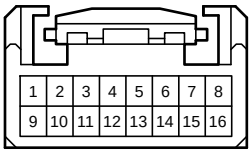

1G
White

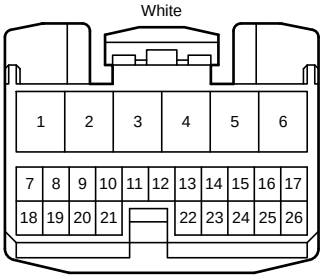

1H
White

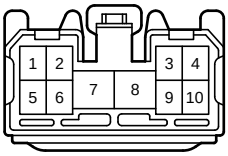

2A
White

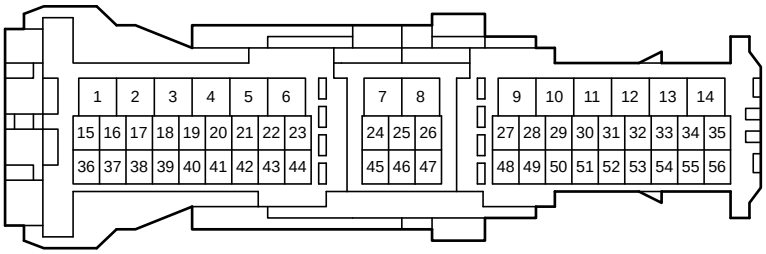

2B
White

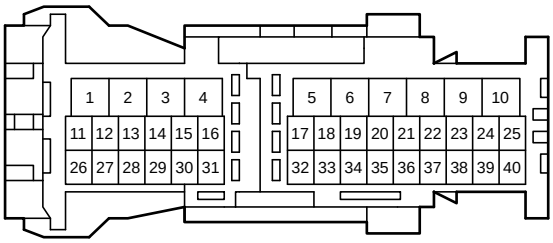

2C
White

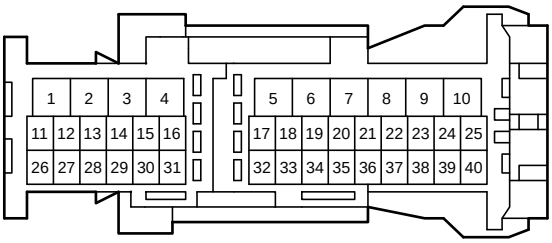

2D
White

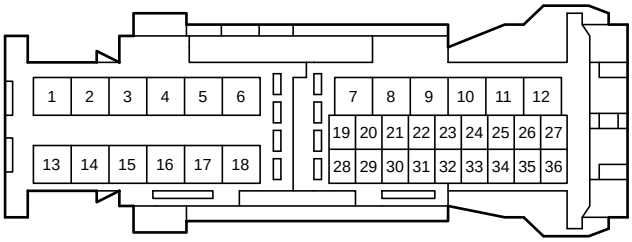

AH2
White

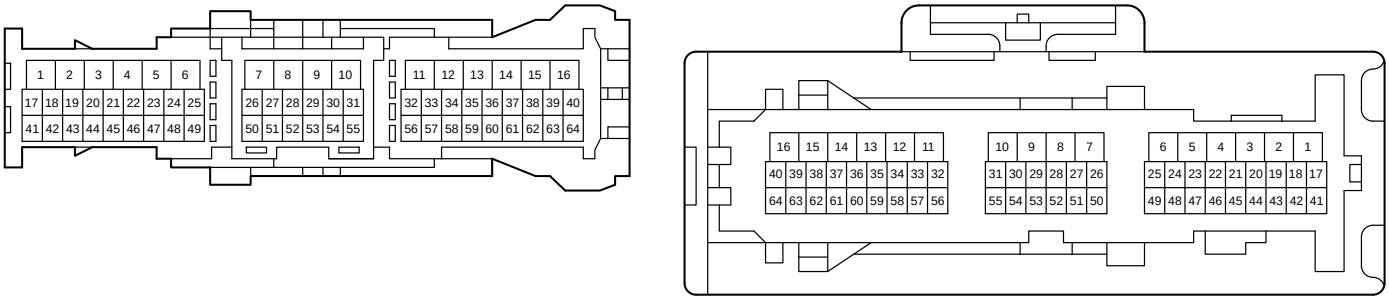

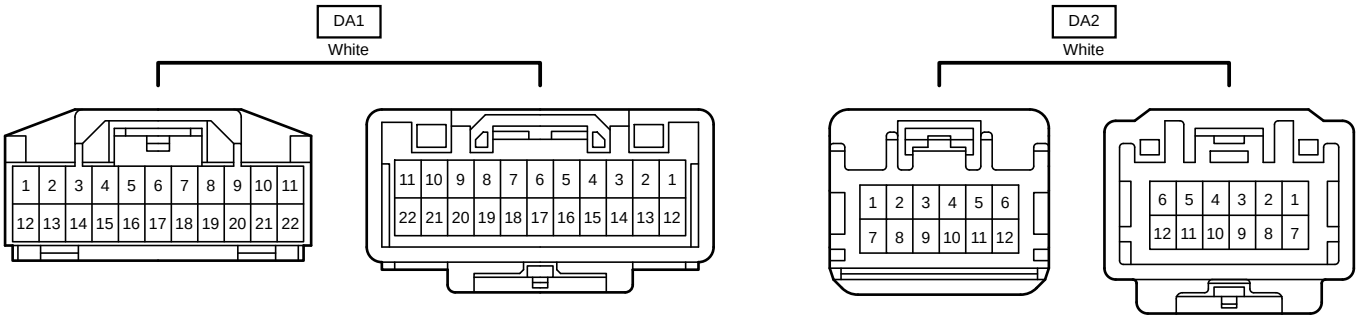
DA1
White
1 2 3 4 5 6 7 8 9 10 11
12 13 14 15 16 17 18 19 20 21 22
11 10 9 8 7 6 5 4 3 2 1
22 21 20 19 18 17 16 15 14 13 12
DA2
White
1 2 3 4 5 6
7 8 9 10 11 12
6 5 4 3 2 1
12 11 10 9 8 7

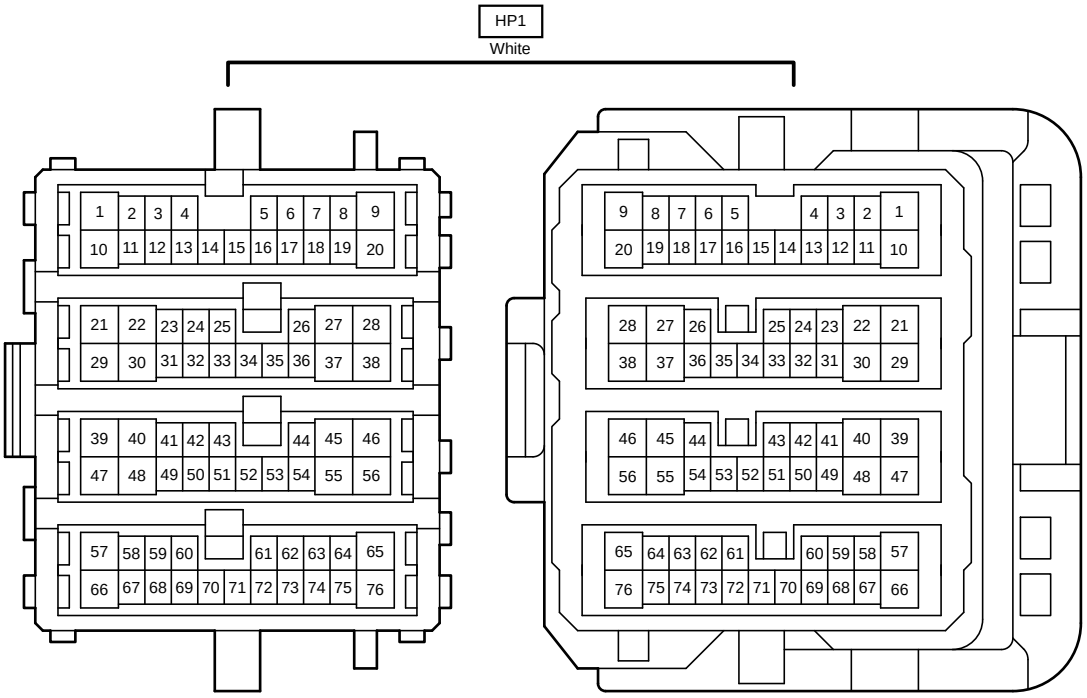
HP1
White
1 2 3 4 5 6 7 8 9
10 11 12 13 14 15 16 17 18 19 20
21 22 23 24 25 26 27 28
29 30 31 32 33 34 35 36 37 38
39 40 41 42 43 44 45 46
47 48 49 50 51 52 53 54 55 56
57 58 59 60 61 62 63 64 65
66 67 68 69 70 71 72 73 74 75 76
9 8 7 6 5 4 3 2 1
20 19 18 17 16 15 14 13 12 11 10
28 27 26 25 24 23 22 21
38 37 36 35 34 33 32 31 30 29
46 45 44 43 42 41 40 39
56 55 54 53 52 51 50 49 48 47
65 64 63 62 61 60 59 58 57
76 75 74 73 72 71 70 69 68 67 66

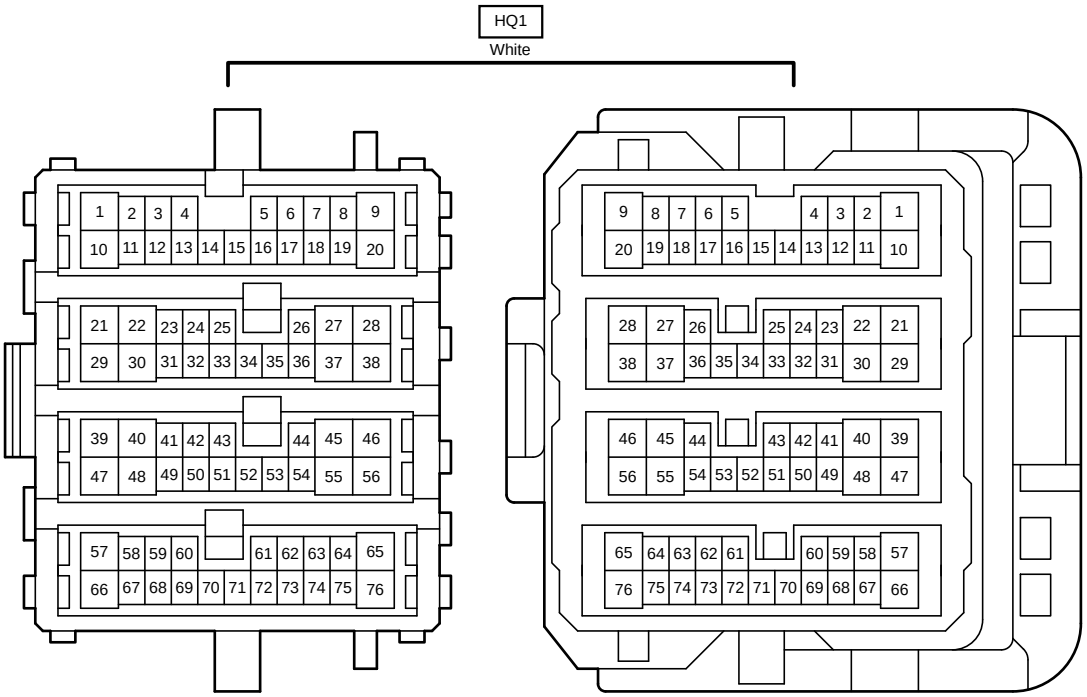
HQ1
White

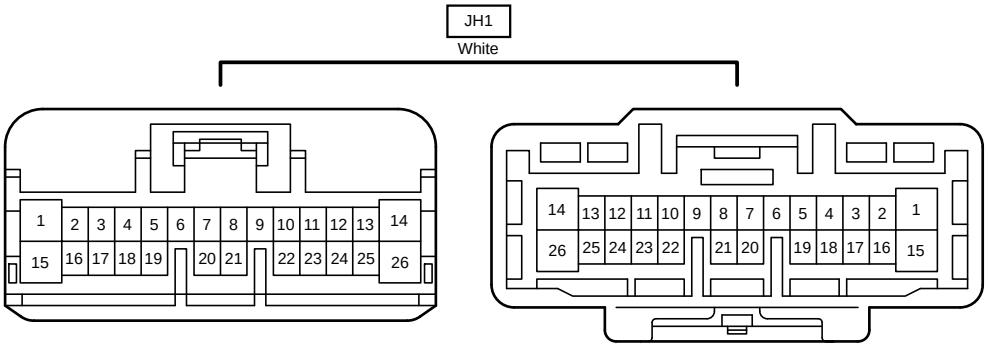
JH1
White

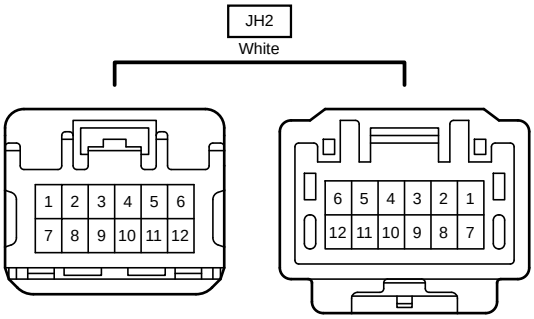
JH2
White

KH1
White

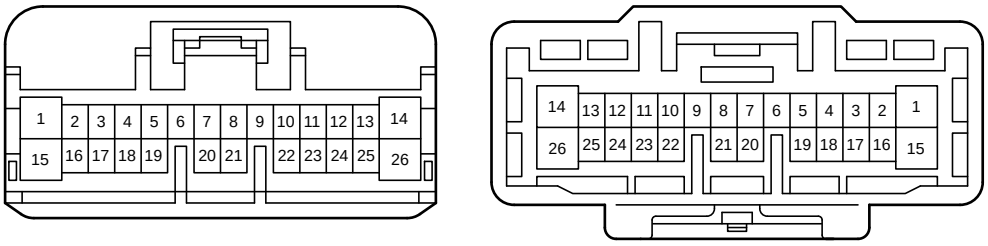

KH2
White

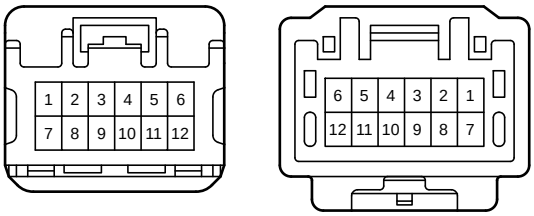

LQ1
White

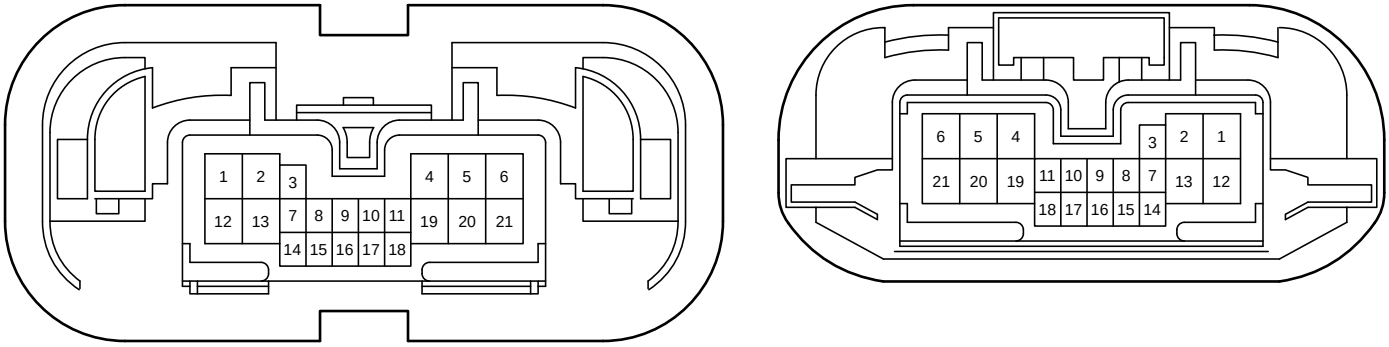

MP1
White

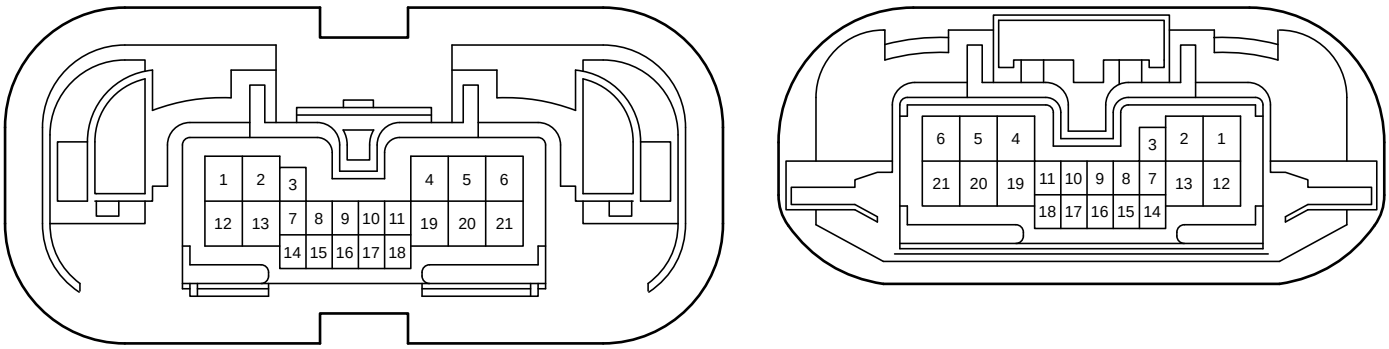

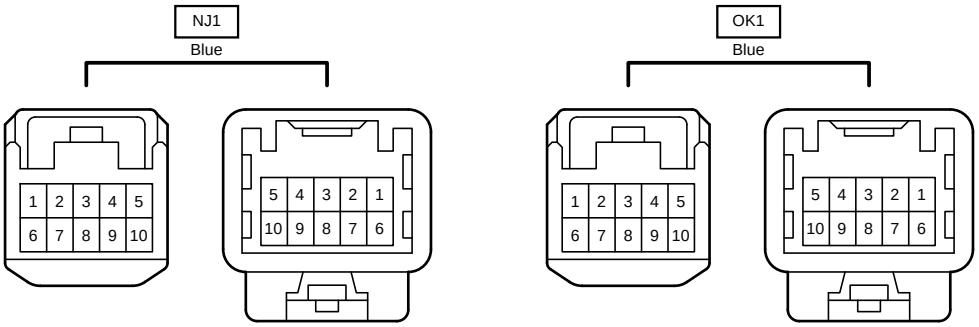
NJ1
Blue
1 2 3 4 5
6 7 8 9 10
5 4 3 2 1
10 9 8 7 6
OK1
Blue
1 2 3 4 5
6 7 8 9 10
5 4 3 2 1
10 9 8 7 6

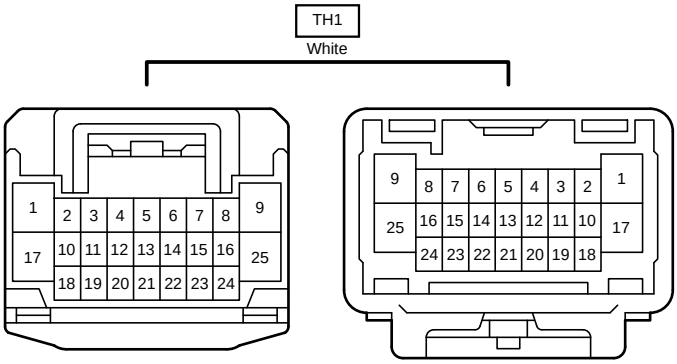
TH1
White
1 2 3 4 5 6 7 8 9
17 10 11 12 13 14 15 16 25
18 19 20 21 22 23 24
9 8 7 6 5 4 3 2 1
25 16 15 14 13 12 11 10 17
24 23 22 21 20 19 18

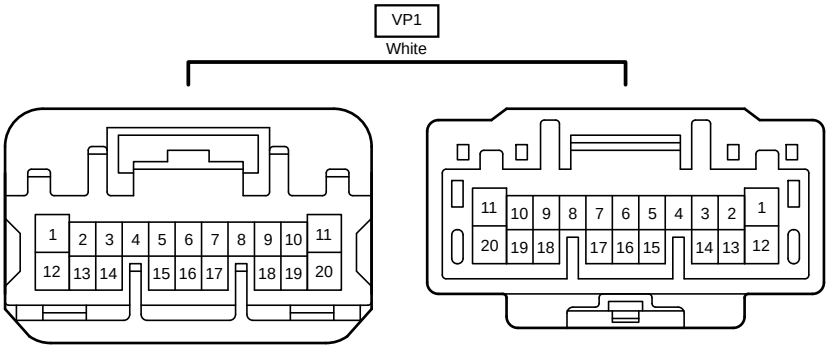
VP1
White
1 2 3 4 5 6 7 8 9 10 11
12 13 14 15 16 17 18 19 20
11 10 9 8 7 6 5 4 3 2 1
20 19 18 17 16 15 14 13 12