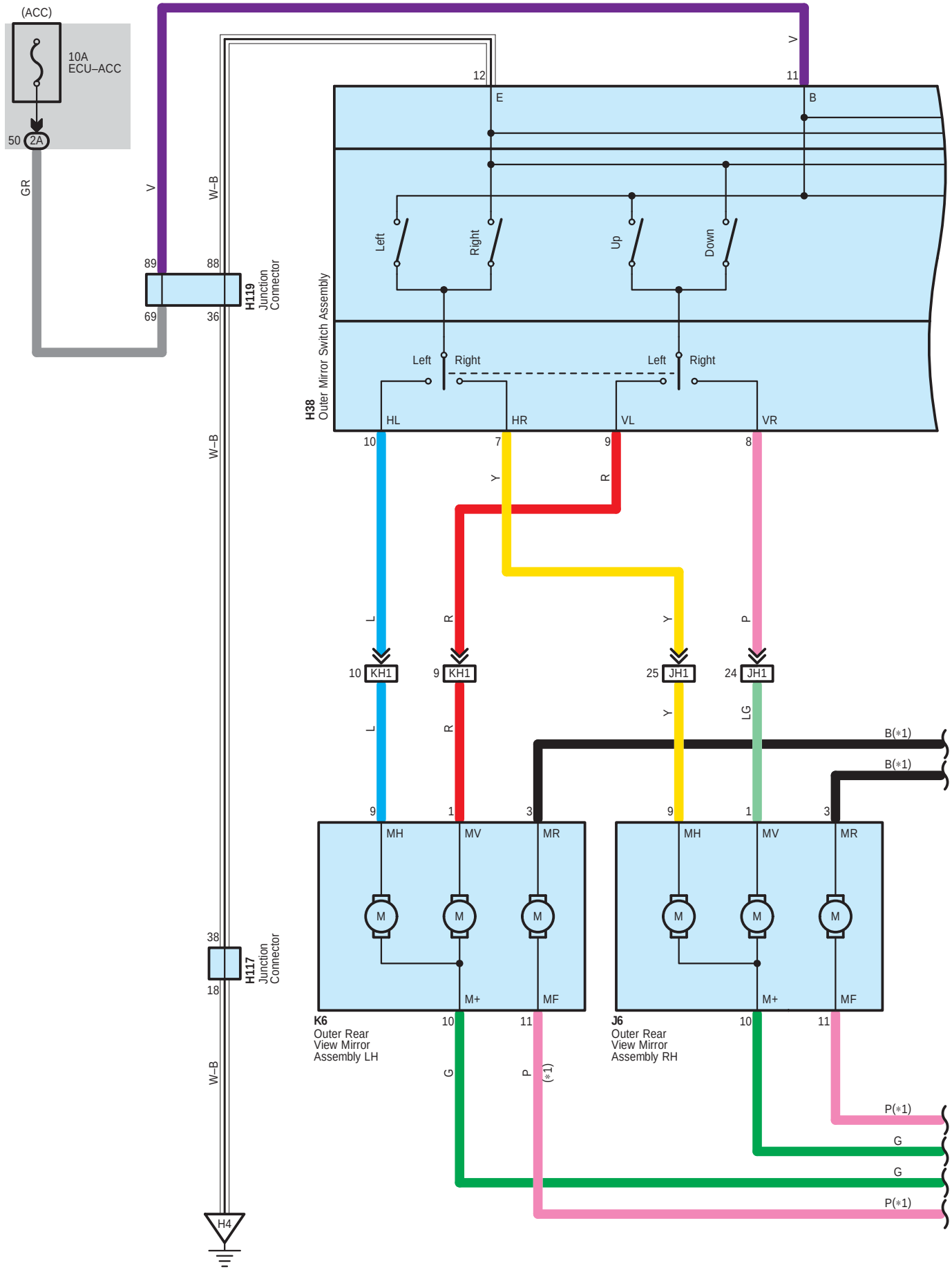
(ACC)
10A
ECU–ACC
50
2A
GR
V
W–B
89
88
69
36
H119
Junction
Connector
12
11
E
B
V
Left
Right
Up
Down
H38
Outer Mirror Switch Assembly
Left
Right
Left
Right
HL
HR
VL
VR
10
7
9
8
Y
R
L
R
Y
P
10
KH1
9
KH1
25
JH1
24
JH1
L
R
Y
LG
B(*1)
B(*1)
9
1
3
9
1
3
MH
MV
MR
MH
MV
MR
M
M
M
M
M
M
38
H117
Junction
Connector
18
M+
MF
M+
MF
K6
Outer Rear
View Mirror
Assembly LH
10
11
J6
Outer Rear
View Mirror
Assembly RH
10
11
G
P
(*1)
P(*1)
G
G
P(*1)
H4

∗ 1 : w/ Retractable Mirror

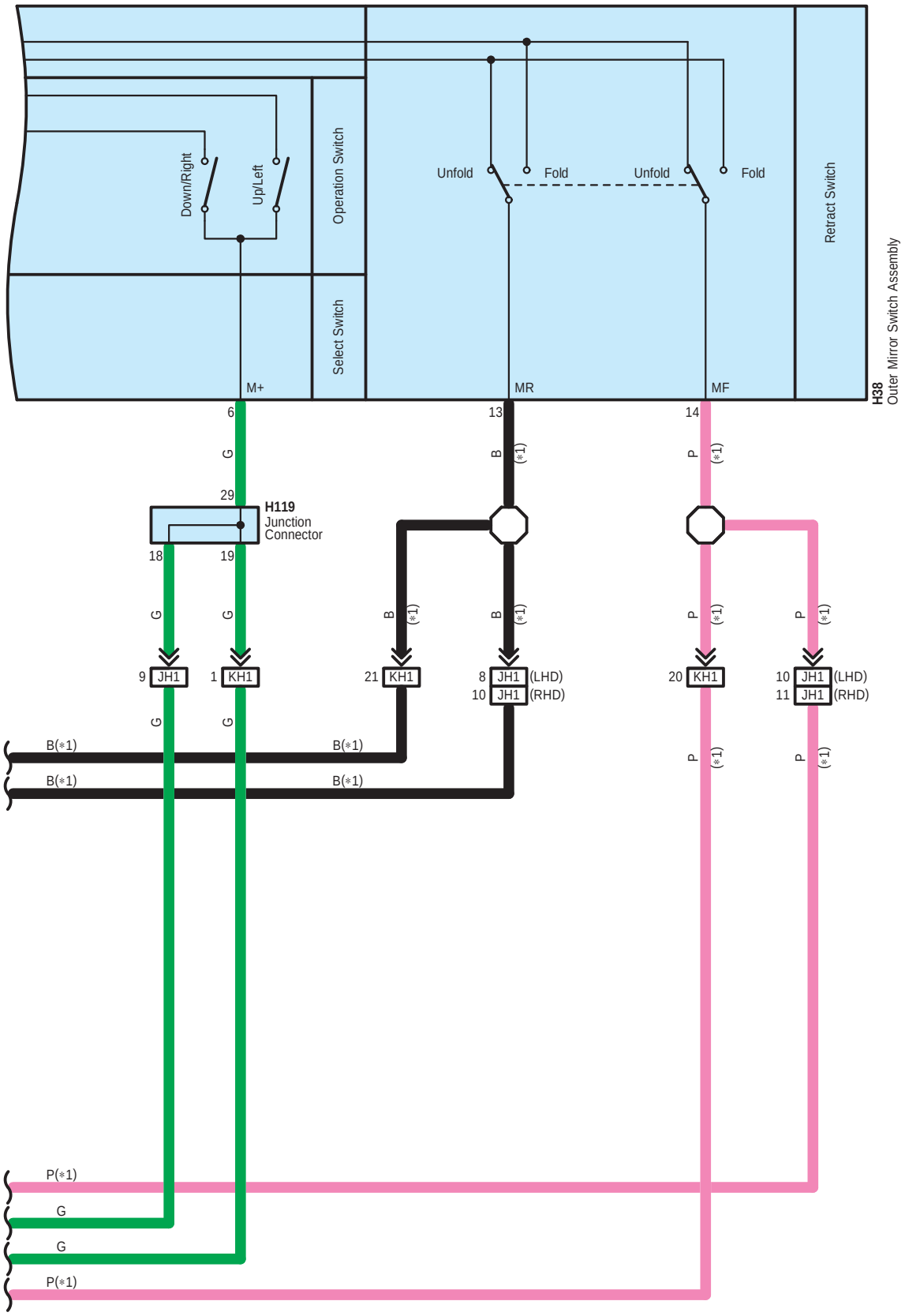

H 38
Black

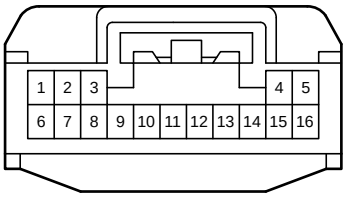

H117
White

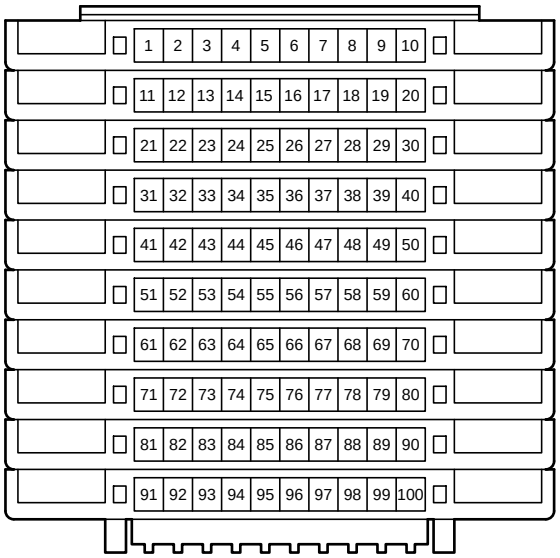

H119
White

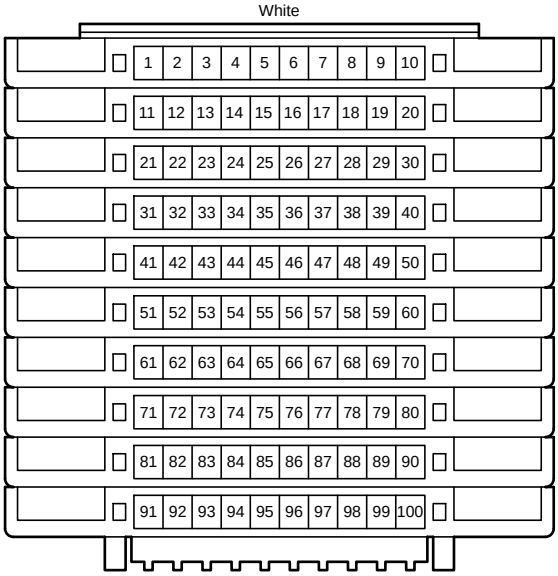

J 6
White

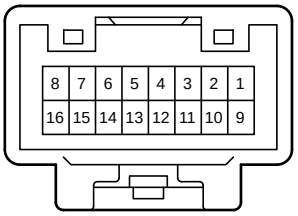

K 6
White

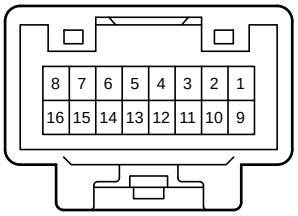

2A
White

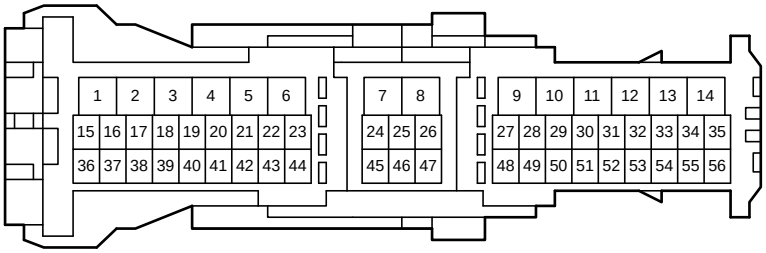

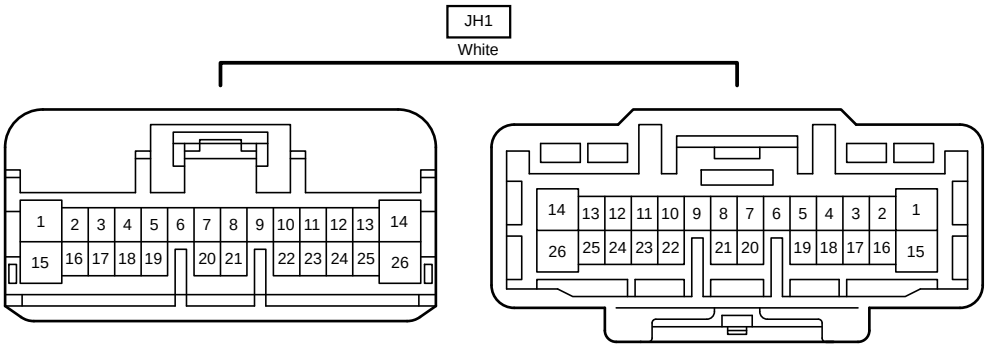
JH1
White
1 2 3 4 5 6 7 8 9 10 11 12 13 14
15 16 17 18 19 20 21 22 23 24 25 26
14 13 12 11 10 9 8 7 6 5 4 3 2 1
26 25 24 23 22 21 20 19 18 17 16 15

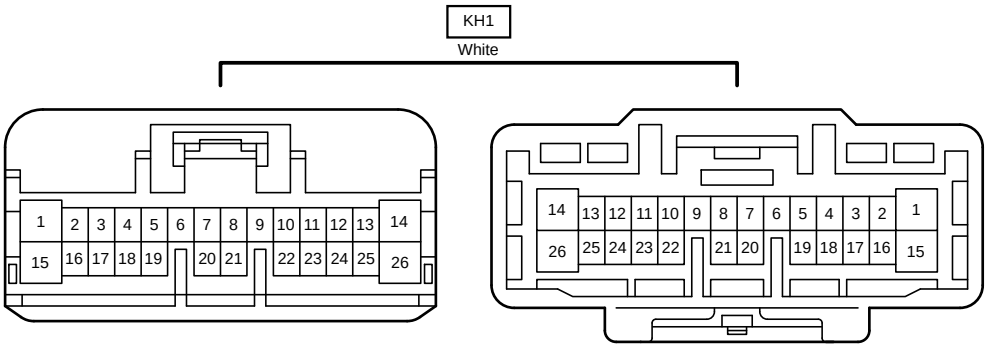
KH1
White
1 2 3 4 5 6 7 8 9 10 11 12 13 14
15 16 17 18 19 20 21 22 23 24 25 26
14 13 12 11 10 9 8 7 6 5 4 3 2 1
26 25 24 23 22 21 20 19 18 17 16 15