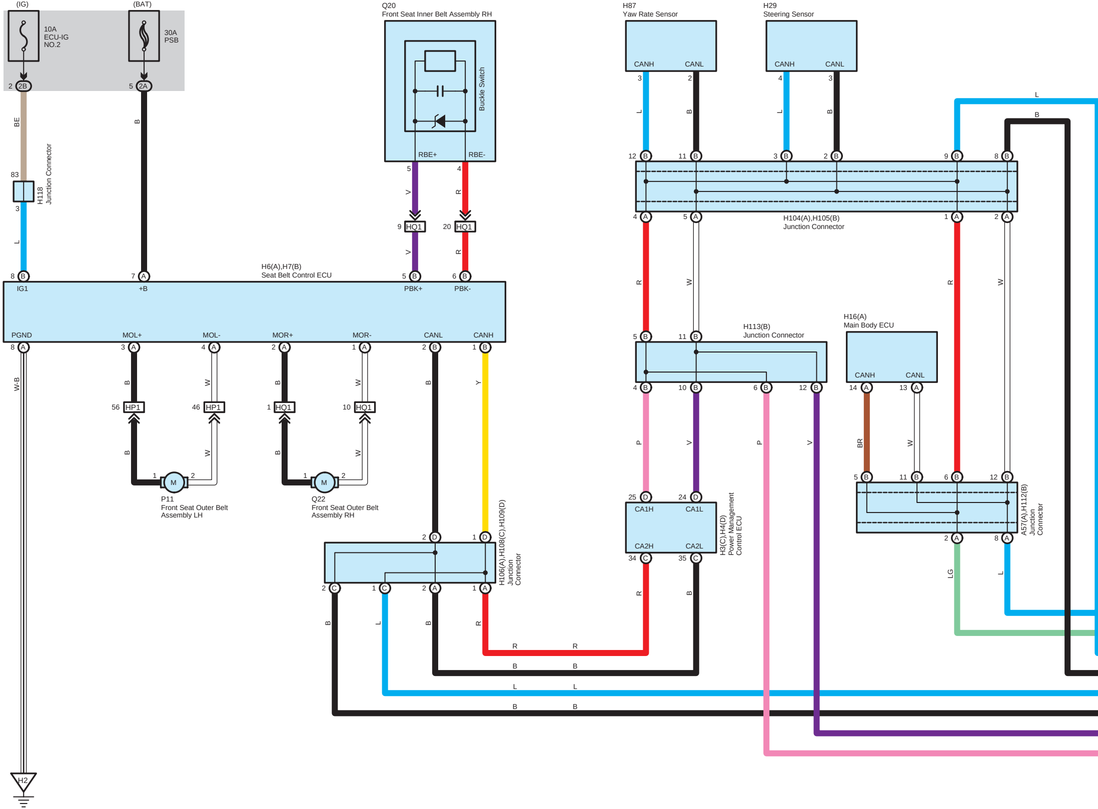
(IG)
10A
ECU-IG
NO.2
(BAT)
30A
PSB
2B
2A
BE
B
83
H118
Junction Connector
3
L
Q20
Front Seat Inner Belt Assembly RH
Buckle Switch
RBE+
RBE-
V
R
HQ1
H87
Yaw Rate Sensor
CANH
CANL
H29
Steering Sensor
H104(A),H105(B)
Junction Connector
H6(A),H7(B)
Seat Belt Control ECU
IG1
+B
PBK+
PBK-
PGND
MOL+
MOL-
MOR+
MOR-
CANL
CANH
W-B
HP1
W
Y
M
P11
Front Seat Outer Belt
Assembly LH
Q22
Front Seat Outer Belt
Assembly RH
H113(B)
Junction Connector
H16(A)
Main Body ECU
BR
P
CA1H
CA1L
CA2H
CA2L
H3(C),H4(D)
Power Management
Control ECU
A57(A),H112(B)
Junction
Connector
LG
H106(A),H108(C),H109(D)
Junction
Connector
H2

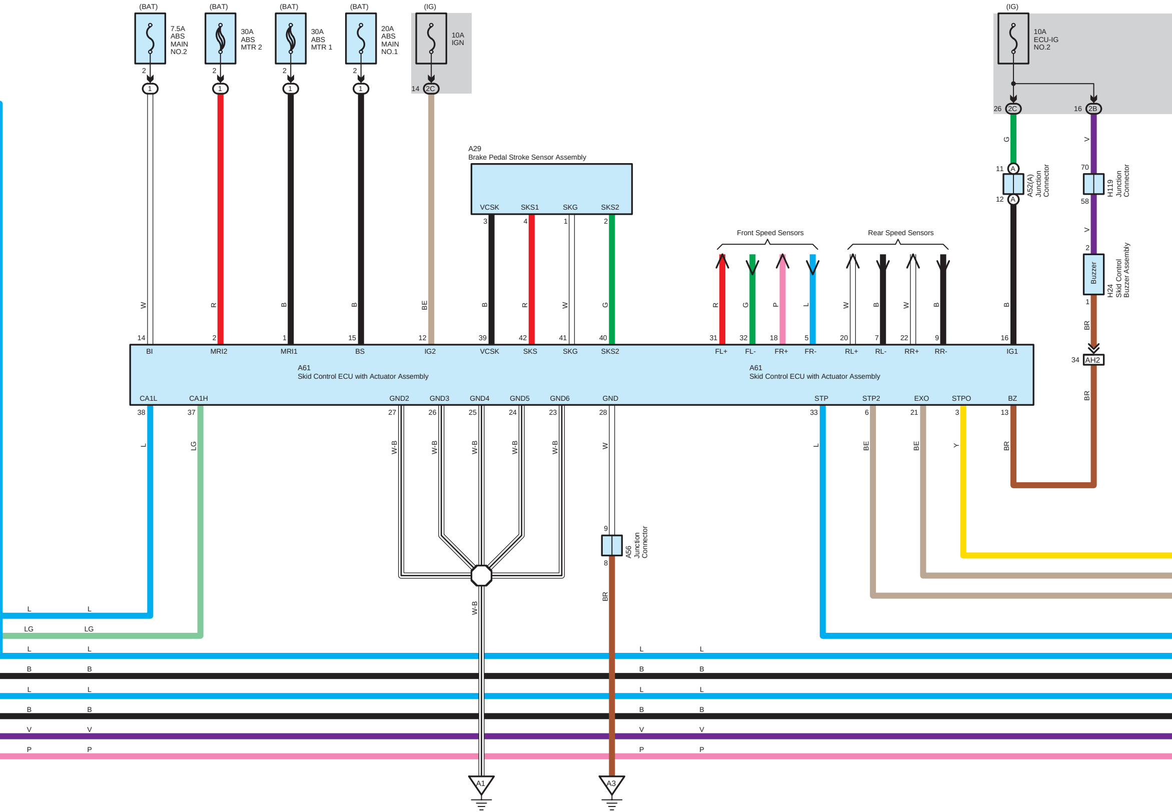

(BAT)
7.5A ABS MAIN NO.2
(BAT)
30A ABS MTR 2
(BAT)
30A ABS MTR 1
(BAT)
20A ABS MAIN NO.1
(IG)
10A IGN
(IG)
10A ECU-IG NO.2
2
1
14 2C
26 2C
16 2B
A29
Brake Pedal Stroke Sensor Assembly
VCSK
SKS1
SKG
SKS2
3
4
1
2
11 A
12 A
A52(A) Junction Connector
70
58
H119 Junction Connector
2
Buzzer
1
H24 Skid Control Buzzer Assembly
Front Speed Sensors
Rear Speed Sensors
W
R
B
B
BE
B
R
W
G
R
G
P
L
W
B
W
B
B
G
V
V
BR
14
2
1
15
12
39
42
41
40
31
32
18
5
20
7
22
9
16
34 AH2
BI
MRI2
MRI1
BS
IG2
VCSK
SKS
SKG
SKS2
FL+
FL-
FR+
FR-
RL+
RL-
RR+
RR-
IG1
A61
Skid Control ECU with Actuator Assembly
A61
Skid Control ECU with Actuator Assembly
CA1L
CA1H
GND2
GND3
GND4
GND5
GND6
GND
STP
STP2
EXO
STPO
BZ
38
37
27
26
25
24
23
28
33
6
21
3
13
L
LG
W-B
W-B
W-B
W-B
W-B
W
L
BE
BE
Y
BR
BR
9
A56 Junction Connector
8
BR
W-B
L
L
LG
LG
L
L
B
B
L
L
B
B
V
V
P
P
L
L
B
B
L
L
B
B
V
V
P
P
A1
A3

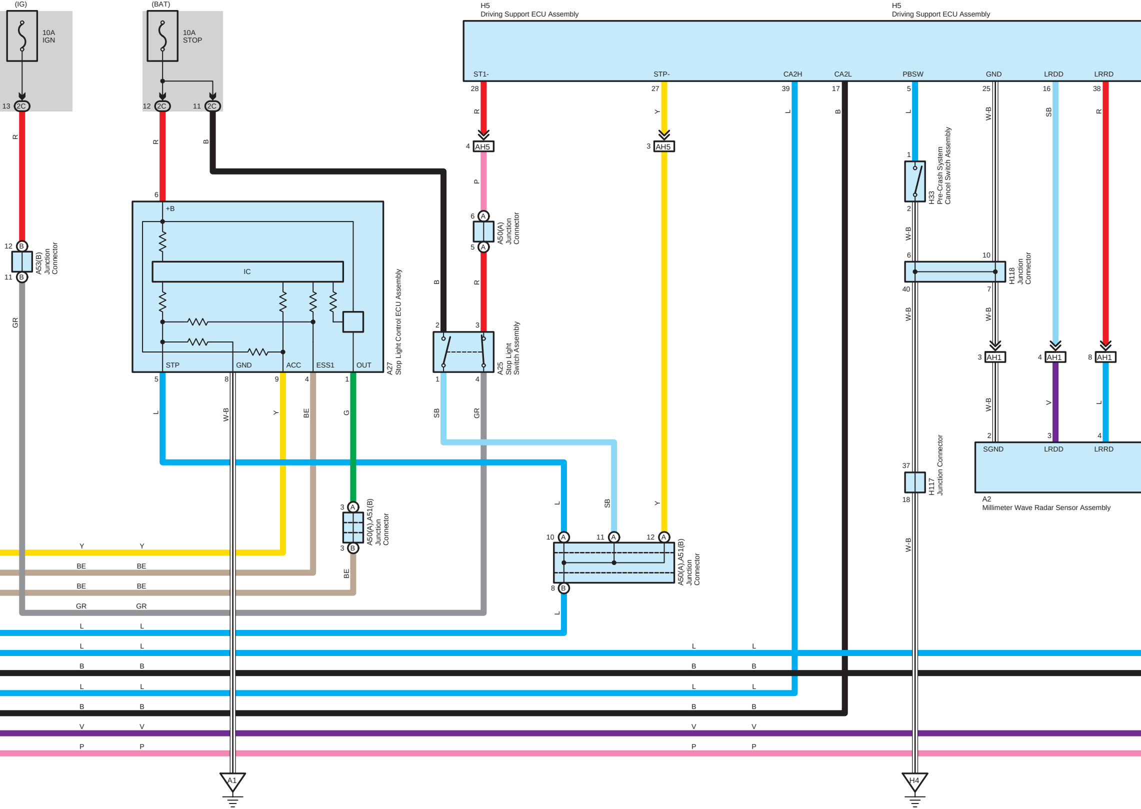
(IG)
10A
IGN
13 2C
(BAT)
10A
STOP
12 2C
11 2C
R
R
B
H5
Driving Support ECU Assembly
ST1-
STP-
CA2H
CA2L
PBSW
GND
LRDD
LRRD
28
27
39
17
5
25
16
38
R
Y
L
B
L
W-B
SB
R
4 AH5
3 AH5
P
6 A
5 A
A50(A) Junction Connector
1
2
H33
Pre-Crash System
Cancel Switch Assembly
W-B
6
10
40
7
H118 Junction Connector
W-B
W-B
3 AH1
4 AH1
8 AH1
W-B
V
L
2
3
4
SGND
LRDD
LRRD
A2
Millimeter Wave Radar Sensor Assembly
37
18
H117 Junction Connector
W-B
12 B
11 B
A53(B) Junction Connector
GR
6
+B
IC
STP
GND
ACC
ESS1
OUT
5
8
9
4
1
A27
Stop Light Control ECU Assembly
L
W-B
Y
BE
G
B
R
2
3
1
4
A25
Stop Light Switch Assembly
SB
GR
3 A
3 B
A50(A),A51(B) Junction Connector
BE
L
SB
Y
10 A
11 A
12 A
8 B
A50(A),A51(B) Junction Connector
L
Y
Y
BE
BE
BE
BE
GR
GR
L
L
L
L
L
L
B
B
B
B
L
L
L
L
B
B
B
B
V
V
V
V
P
P
P
P
A1
H4

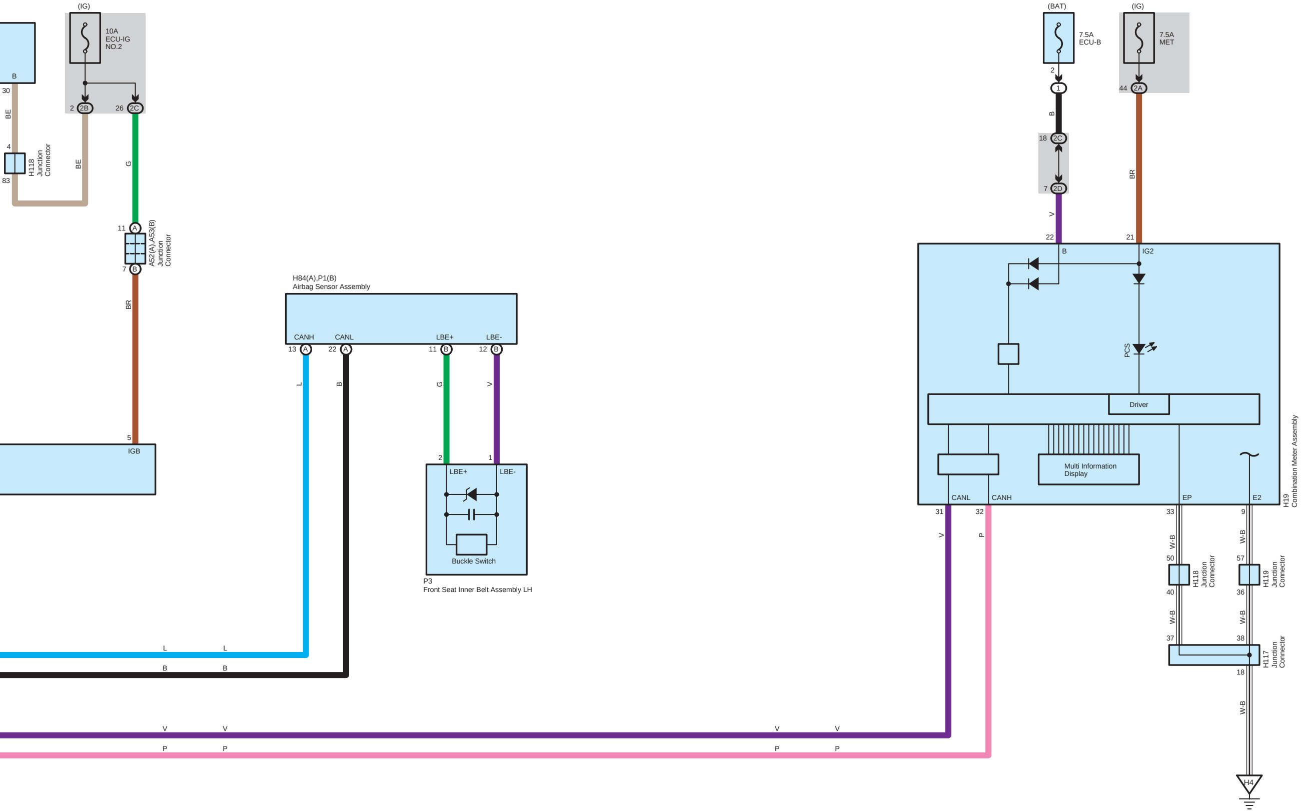
(IG)
10A
ECU-IG
NO.2
B
30
BE
4
H118
Junction
Connector
83
BE
2
2B
26
2C
G
11
A
A52(A),A53(B)
Junction
Connector
7
B
BR
5
IGB
H84(A),P1(B)
Airbag Sensor Assembly
CANH
CANL
LBE+
LBE-
13
A
22
A
11
B
12
B
L
B
G
V
2
1
LBE+
LBE-
Buckle Switch
P3
Front Seat Inner Belt Assembly LH
L
L
B
B
V
V
P
P
V
V
P
P
(BAT)
7.5A
ECU-B
2
1
B
18
2C
7
2D
V
(IG)
7.5A
MET
44
2A
BR
22
21
B
IG2
PCS
Driver
Multi Information
Display
CANL
CANH
EP
E2
H19
Combination Meter Assembly
31
32
V
P
33
9
W-B
W-B
50
H118
Junction
Connector
40
57
H119
Junction
Connector
36
W-B
W-B
37
38
H117
Junction
Connector
18
W-B
H4