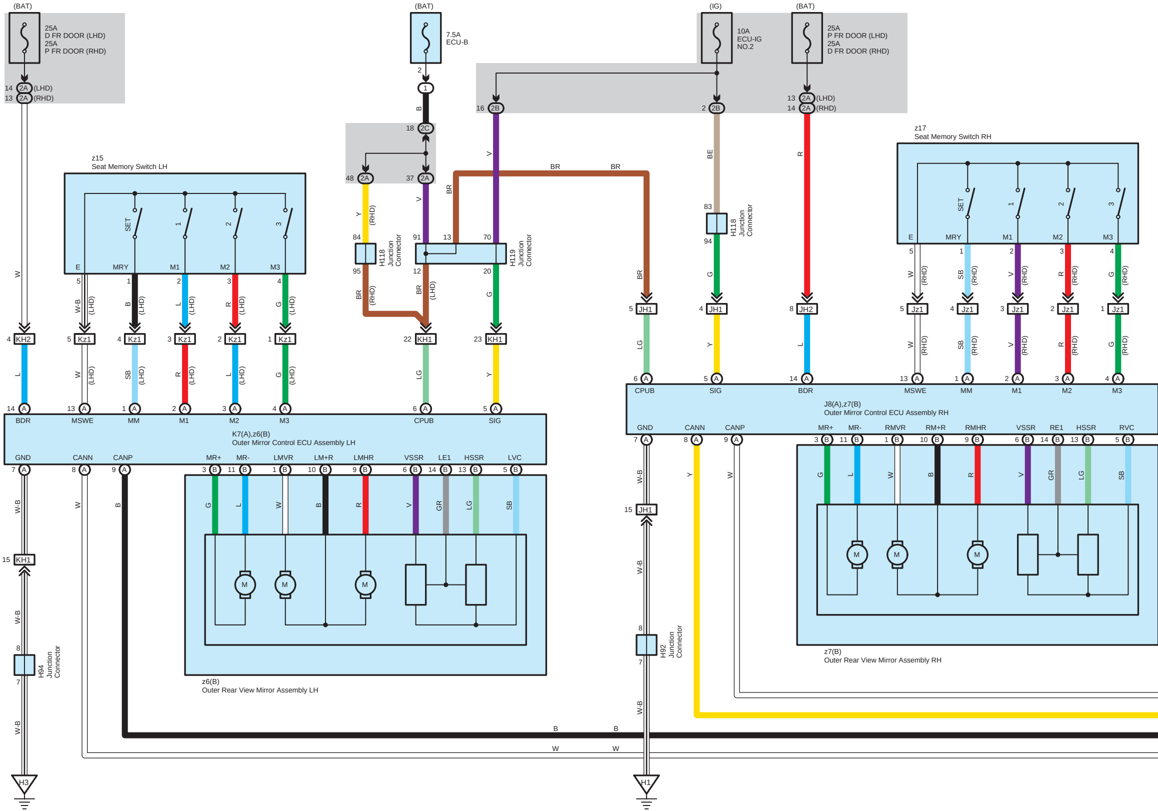
(BAT)
25A
D FR DOOR (LHD)
25A
P FR DOOR (RHD)
14 2A (LHD)
13 2A (RHD)
W
(BAT)
7.5A
ECU-B
2
1
B
18 2C
48 2A
37 2A
Y
(RHD)
V
84
95
H118
Junction
Connector
BR
(RHD)
91
13
70
12
20
H119
Junction
Connector
BR
(LHD)
G
BR
V
BR
BR
(IG)
10A
ECU-IG
NO.2
(BAT)
25A
P FR DOOR (LHD)
25A
D FR DOOR (RHD)
16 2B
2 2B
13 2A (LHD)
14 2A (RHD)
BE
83
94
H118
Junction
Connector
G
R
z15
Seat Memory Switch LH
SET
1
2
3
E
MRY
M1
M2
M3
5 W-B (LHD)
1 B (LHD)
2 L (LHD)
3 R (LHD)
4 G (LHD)
4 KH2
5 Kz1
4 Kz1
3 Kz1
2 Kz1
1 Kz1
22 KH1
23 KH1
L
W (LHD)
SB (LHD)
R (LHD)
L (LHD)
G (LHD)
LG
Y
14 A BDR
13 A MSWE
1 A MM
2 A M1
3 A M2
4 A M3
6 A CPUB
5 A SIG
K7(A),z6(B)
Outer Mirror Control ECU Assembly LH
GND
CANN
CANP
MR+
MR-
LMVR
LM+R
LMHR
VSSR
LE1
HSSR
LVC
7 A
8 A
9 A
3 B
11 B
1 B
10 B
9 B
6 B
14 B
13 B
5 B
W-B
W
B
G
L
W
B
R
V
GR
LG
SB
M
15 KH1
8
H94
Junction
Connector
7
H3
z6(B)
Outer Rear View Mirror Assembly LH
z17
Seat Memory Switch RH
SET
1
2
3
E
MRY
M1
M2
M3
5 W (RHD)
1 SB (RHD)
2 V (RHD)
3 R (RHD)
4 G (RHD)
5 JH1
4 JH1
8 JH2
5 Jz1
4 Jz1
3 Jz1
2 Jz1
1 Jz1
BR
LG
Y
L
W (RHD)
SB (RHD)
V (RHD)
R (RHD)
G (RHD)
6 A CPUB
5 A SIG
14 A BDR
13 A MSWE
1 A MM
2 A M1
3 A M2
4 A M3
J8(A),z7(B)
Outer Mirror Control ECU Assembly RH
GND
CANN
CANP
MR+
MR-
RMVR
RM+R
RMHR
VSSR
RE1
HSSR
RVC
7 A
8 A
9 A
3 B
11 B
1 B
10 B
9 B
6 B
14 B
13 B
5 B
W-B
Y
W
G
L
W
B
R
V
GR
LG
SB
M
15 JH1
8
H92
Junction
Connector
7
H1
z7(B)
Outer Rear View Mirror Assembly RH
B
B
W
W

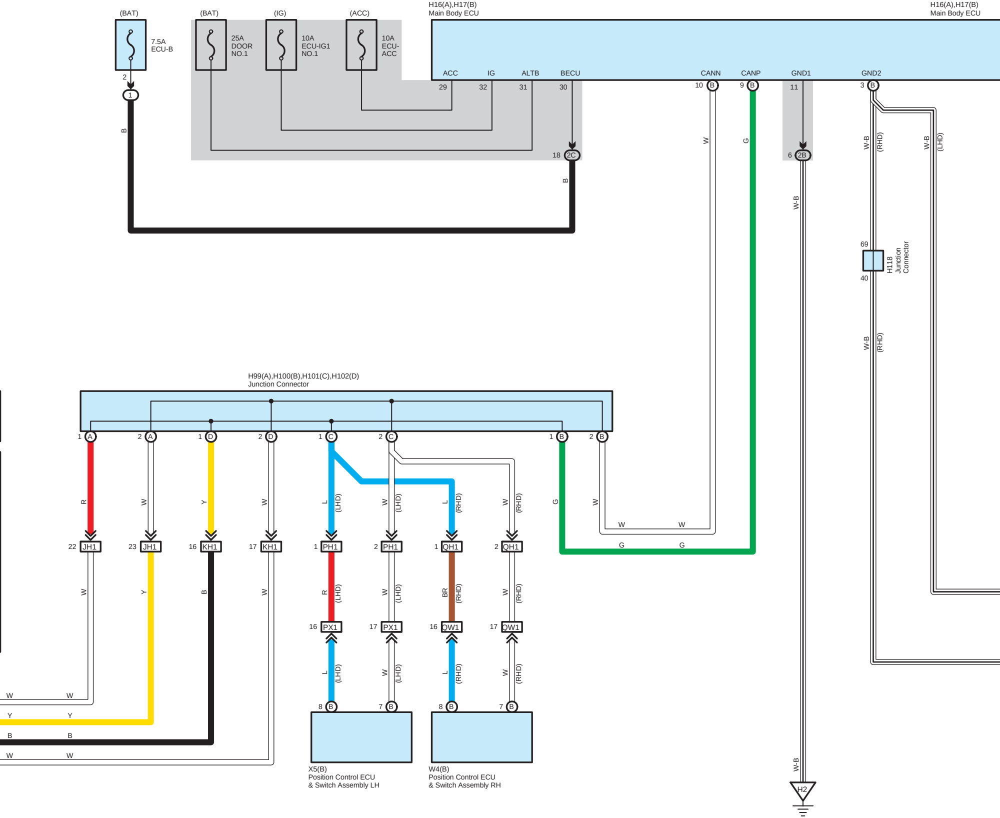
(BAT)
7.5A
ECU-B
2
1
B
(BAT)
25A
DOOR
NO.1
(IG)
10A
ECU-IG1
NO.1
(ACC)
10A
ECU-
ACC
H16(A),H17(B)
Main Body ECU
ACC
IG
ALTB
BECU
29
32
31
30
18
2C
B
CANN
CANP
GND1
GND2
10
B
9
B
11
3
B
W
G
6
2B
W-B
W-B
(RHD)
W-B
(LHD)
H16(A),H17(B)
Main Body ECU
69
40
H118
Junction
Connector
W-B
(RHD)
H99(A),H100(B),H101(C),H102(D)
Junction Connector
1
A
2
A
1
D
2
D
1
C
2
C
1
B
2
B
R
W
Y
W
L
(LHD)
W
(LHD)
L
(RHD)
W
(RHD)
G
W
W
W
G
G
22
JH1
23
JH1
16
KH1
17
KH1
1
PH1
2
PH1
1
QH1
2
QH1
W
Y
B
W
R
(LHD)
W
(LHD)
BR
(RHD)
W
(RHD)
16
PX1
17
PX1
16
QW1
17
QW1
L
(LHD)
W
(LHD)
L
(RHD)
W
(RHD)
8
B
7
B
8
B
7
B
W
W
Y
Y
B
B
W
W
X5(B)
Position Control ECU
& Switch Assembly LH
W4(B)
Position Control ECU
& Switch Assembly RH
W-B
H2

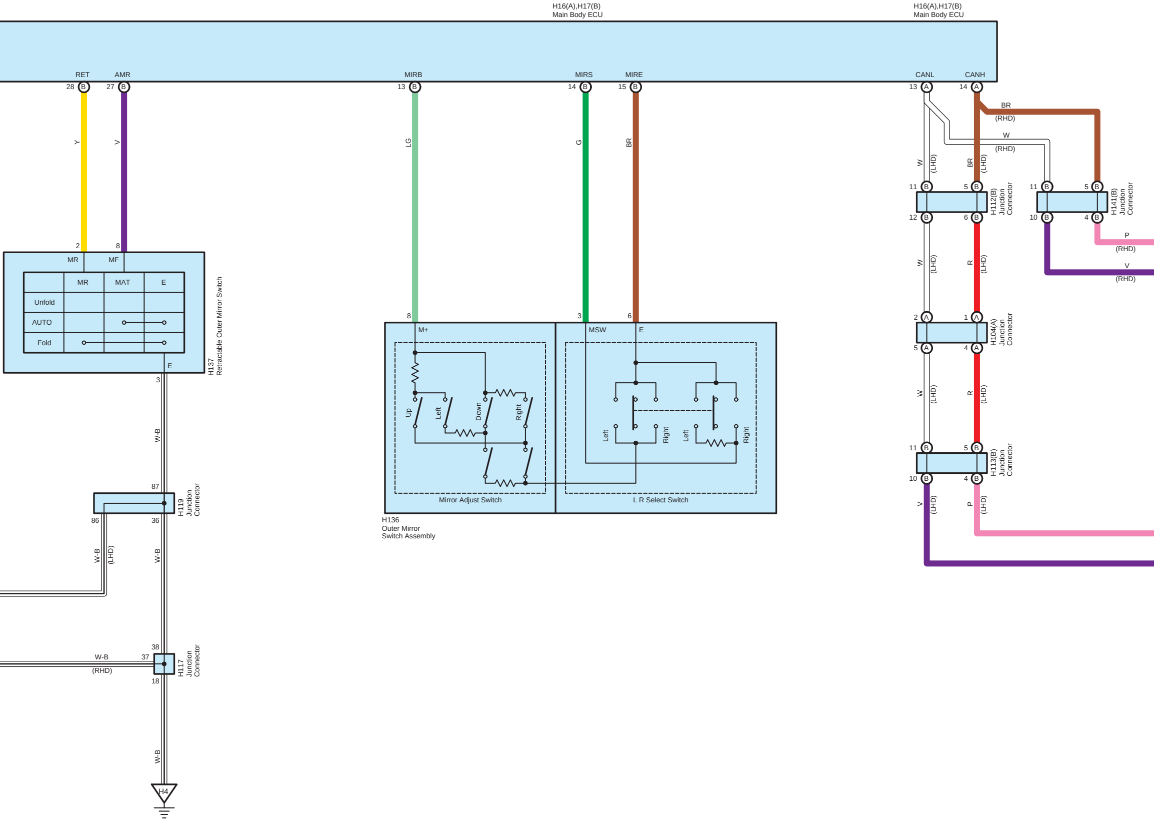
H16(A),H17(B)
Main Body ECU
H16(A),H17(B)
Main Body ECU
RET
AMR
MIRB
MIRS
MIRE
CANL
CANH
28
B
27
B
13
B
14
B
15
B
13
A
14
A
Y
V
LG
G
BR
BR
(RHD)
W
(RHD)
W
(LHD)
BR
(LHD)
11
B
5
B
12
B
6
B
H112(B)
Junction
Connector
11
B
5
B
10
B
4
B
H141(B)
Junction
Connector
P
(RHD)
V
(RHD)
W
(LHD)
R
(LHD)
2
A
1
A
5
A
4
A
H104(A)
Junction
Connector
W
(LHD)
R
(LHD)
11
B
5
B
10
B
4
B
H113(B)
Junction
Connector
V
(LHD)
P
(LHD)
2
8
MR
MF
MR
MAT
E
Unfold
AUTO
Fold
E
3
H137
Retractable Outer Mirror Switch
W-B
87
H119
Junction
Connector
86
36
W-B
(LHD)
W-B
38
W-B
37
(RHD)
H117
Junction
Connector
18
W-B
H4
8
3
6
M+
MSW
E
Up
Left
Down
Right
Left
Right
Left
Right
Mirror Adjust Switch
L R Select Switch
H136
Outer Mirror
Switch Assembly

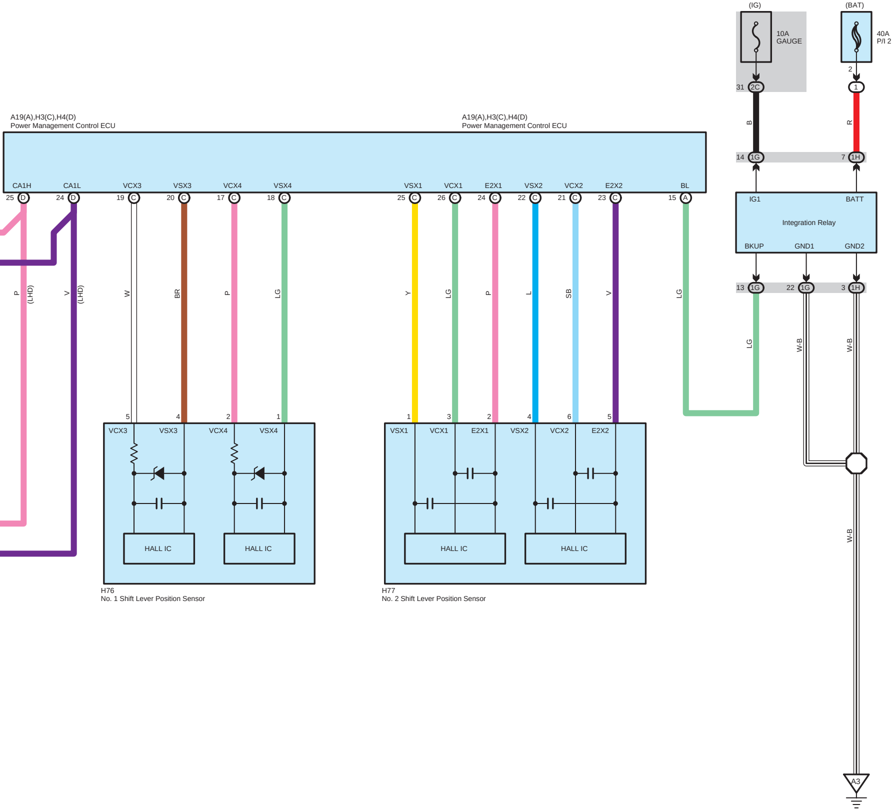
(IG)
10A
GAUGE
(BAT)
40A
P/I 2
2
31
2C
1
B
R
14
1G
7
1H
A19(A),H3(C),H4(D)
Power Management Control ECU
A19(A),H3(C),H4(D)
Power Management Control ECU
CA1H
CA1L
VCX3
VSX3
VCX4
VSX4
VSX1
VCX1
E2X1
VSX2
VCX2
E2X2
BL
25 D
24 D
19 C
20 C
17 C
18 C
25 C
26 C
24 C
22 C
21 C
23 C
15 A
IG1
BATT
Integration Relay
BKUP
GND1
GND2
13 1G
22 1G
3 1H
P
(LHD)
V
(LHD)
W
BR
P
LG
Y
LG
P
L
SB
V
LG
LG
W-B
W-B
W-B
5
4
2
1
1
3
2
4
6
5
VCX3
VSX3
VCX4
VSX4
HALL IC
HALL IC
VSX1
VCX1
E2X1
VSX2
VCX2
E2X2
HALL IC
HALL IC
H76
No. 1 Shift Lever Position Sensor
H77
No. 2 Shift Lever Position Sensor
A3