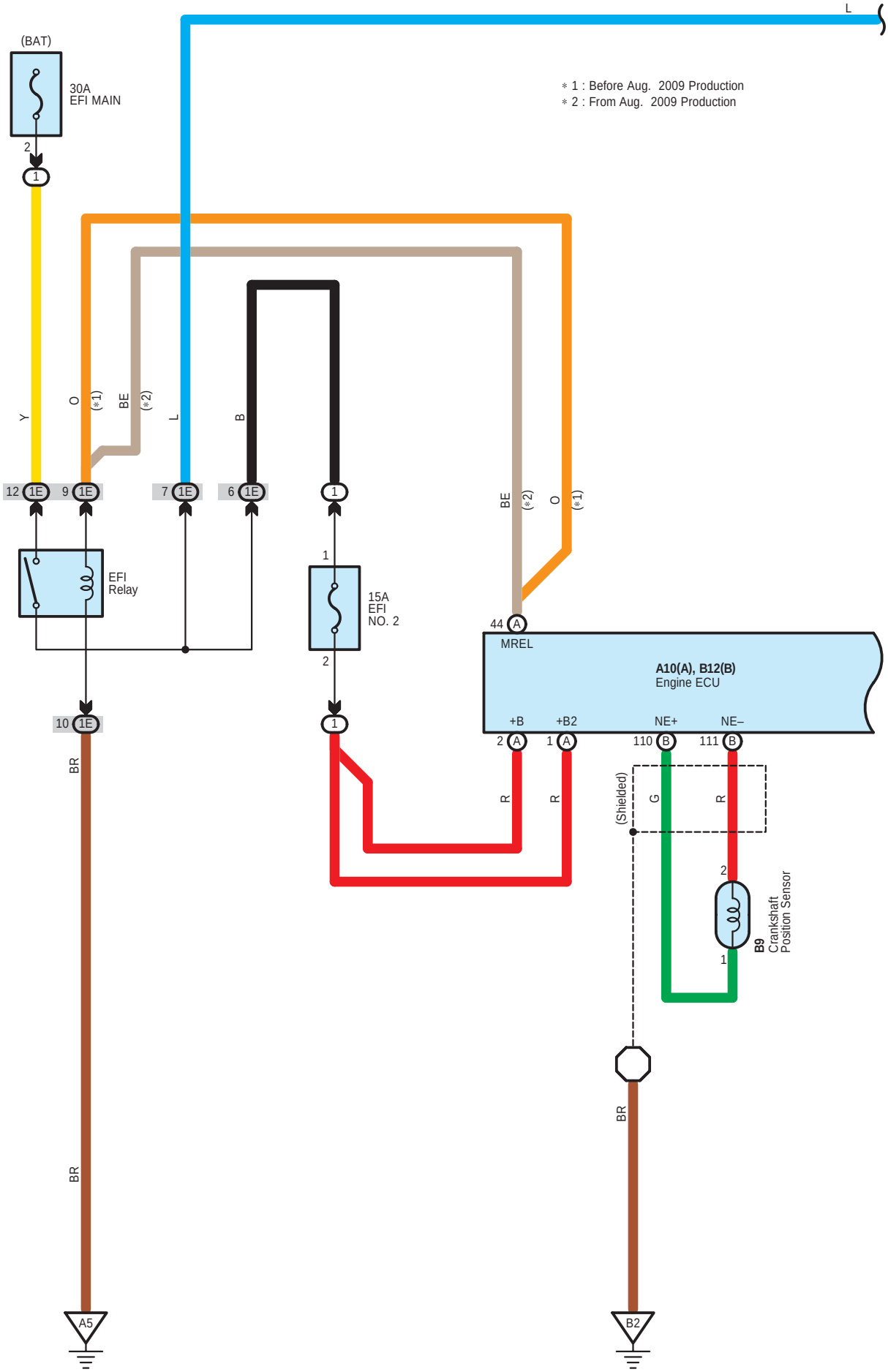
(BAT)
30A
EFI MAIN
2
1
L
＊1 : Before Aug. 2009 Production
＊2 : From Aug. 2009 Production
Y
O
(＊1)
BE
(＊2)
L
B
12 1E
9 1E
7 1E
6 1E
1
EFI
Relay
1
15A
EFI
NO. 2
2
BE
(＊2)
O
(＊1)
44 A
MREL
A10(A), B12(B)
Engine ECU
+B
+B2
NE+
NE–
2 A
1 A
110 B
111 B
10 1E
1
BR
R
R
(Shielded)
G
R
2
B9
Crankshaft
Position Sensor
1
BR
BR
A5
B2

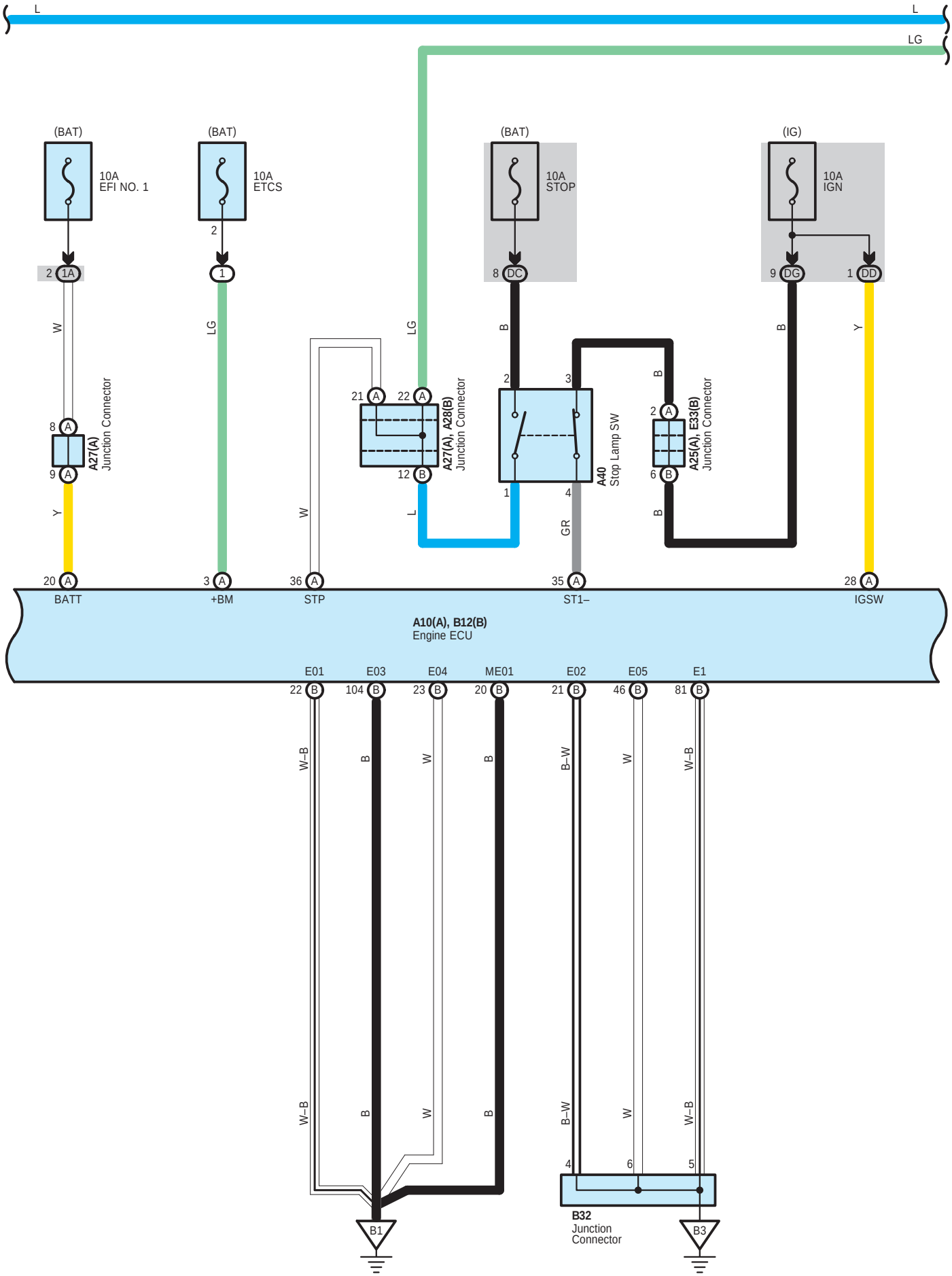
L
L
LG
(BAT)
10A
EFI NO. 1
(BAT)
10A
ETCS
(BAT)
10A
STOP
(IG)
10A
IGN
2 1A
2
1
8 DC
9 DG
1 DD
W
LG
LG
B
B
Y
A27(A)
Junction Connector
8 A
9 A
21 A
22 A
12 B
A27(A), A28(B)
Junction Connector
2
3
1
4
A40
Stop Lamp SW
B
2 A
6 B
A25(A), E33(B)
Junction Connector
Y
W
L
GR
B
20 A
BATT
3 A
+BM
36 A
STP
35 A
ST1–
28 A
IGSW
A10(A), B12(B)
Engine ECU
E01
E03
E04
ME01
E02
E05
E1
22 B
104 B
23 B
20 B
21 B
46 B
81 B
W–B
B
W
B
B–W
W
W–B
W–B
B
W
B
B–W
W
W–B
4
6
5
B32
Junction
Connector
B1
B3

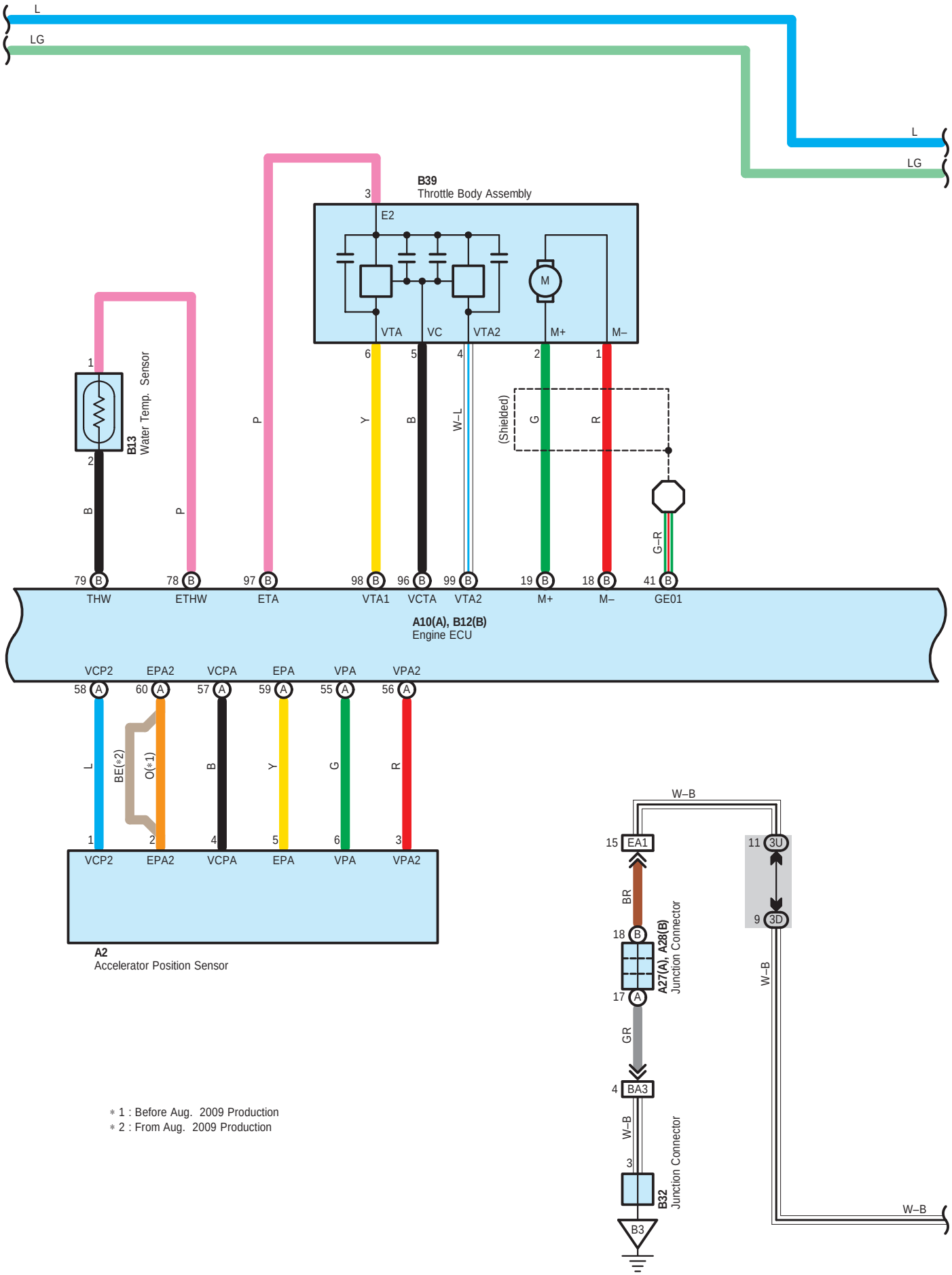

* 1 : Before Aug. 2009 Production
* 2 : From Aug. 2009 Production

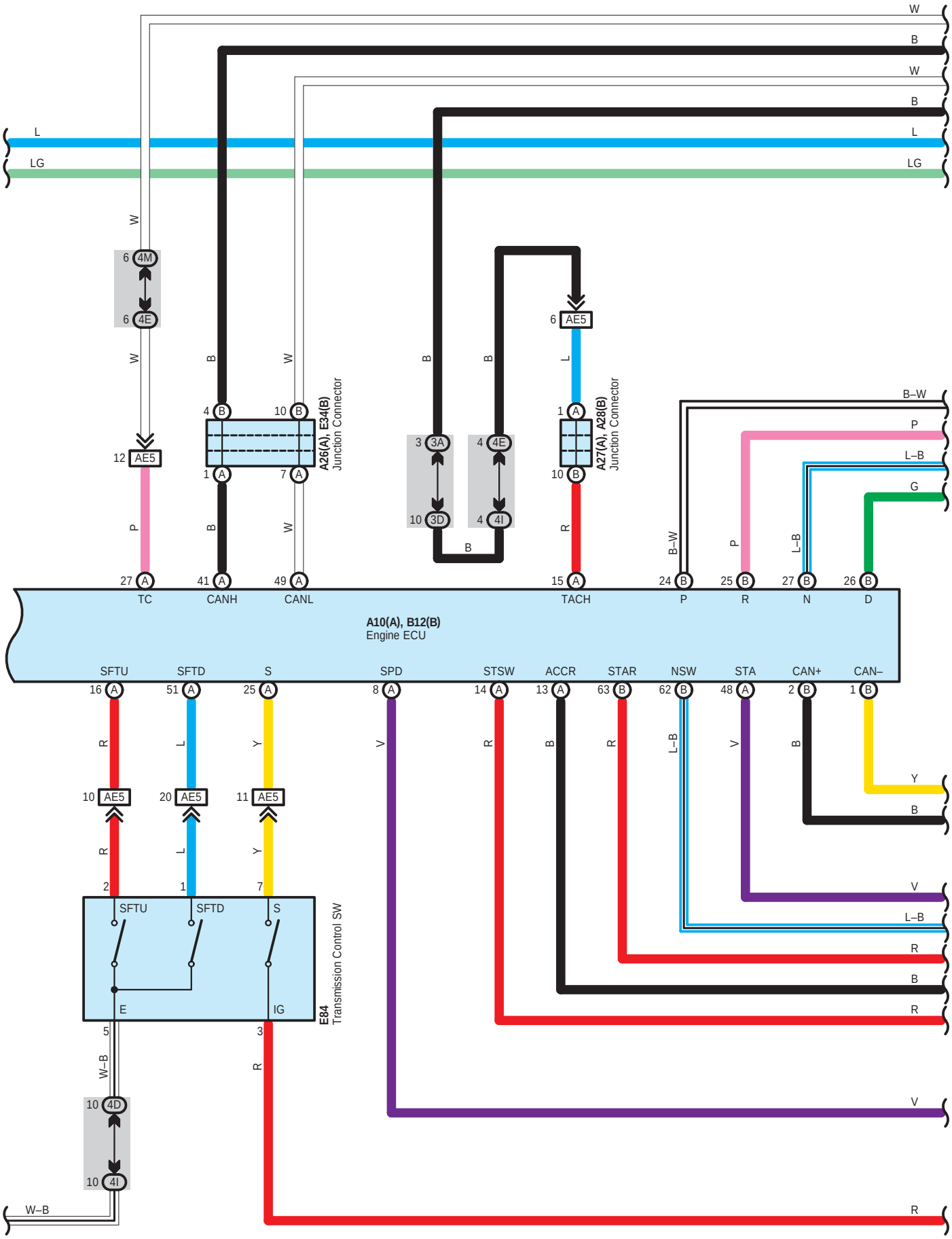
W
B
W
B
L
L
LG
LG
6 4M
6 4E
12 AE5
P
27 A
TC
4 B
10 B
1 A
7 A
A26(A), E34(B)
Junction Connector
41 A
CANH
49 A
CANL
3 3A
10 3D
4 4E
4 4I
6 AE5
1 A
10 B
A27(A), A28(B)
Junction Connector
15 A
TACH
B–W
24 B
P
25 B
R
L–B
27 B
N
G
26 B
D
A10(A), B12(B)
Engine ECU
SFTU
16 A
SFTD
51 A
S
25 A
SPD
8 A
STSW
14 A
ACCR
13 A
STAR
63 B
NSW
62 B
STA
48 A
CAN+
2 B
CAN–
1 B
10 AE5
20 AE5
11 AE5
2
1
7
SFTU
SFTD
S
E
IG
E84
Transmission Control SW
5
3
W–B
10 4D
10 4I
W–B

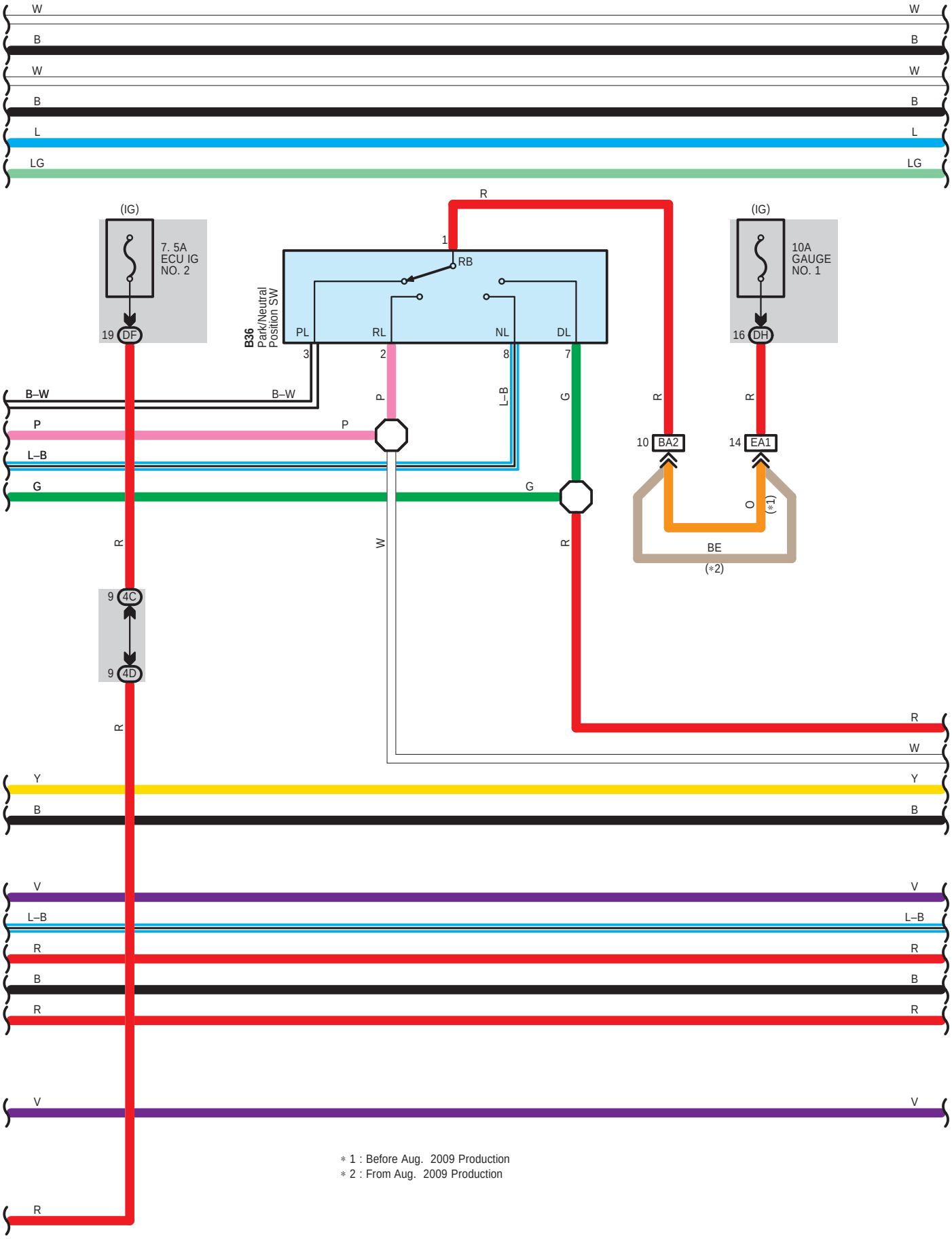

* 1 : Before Aug. 2009 Production
* 2 : From Aug. 2009 Production

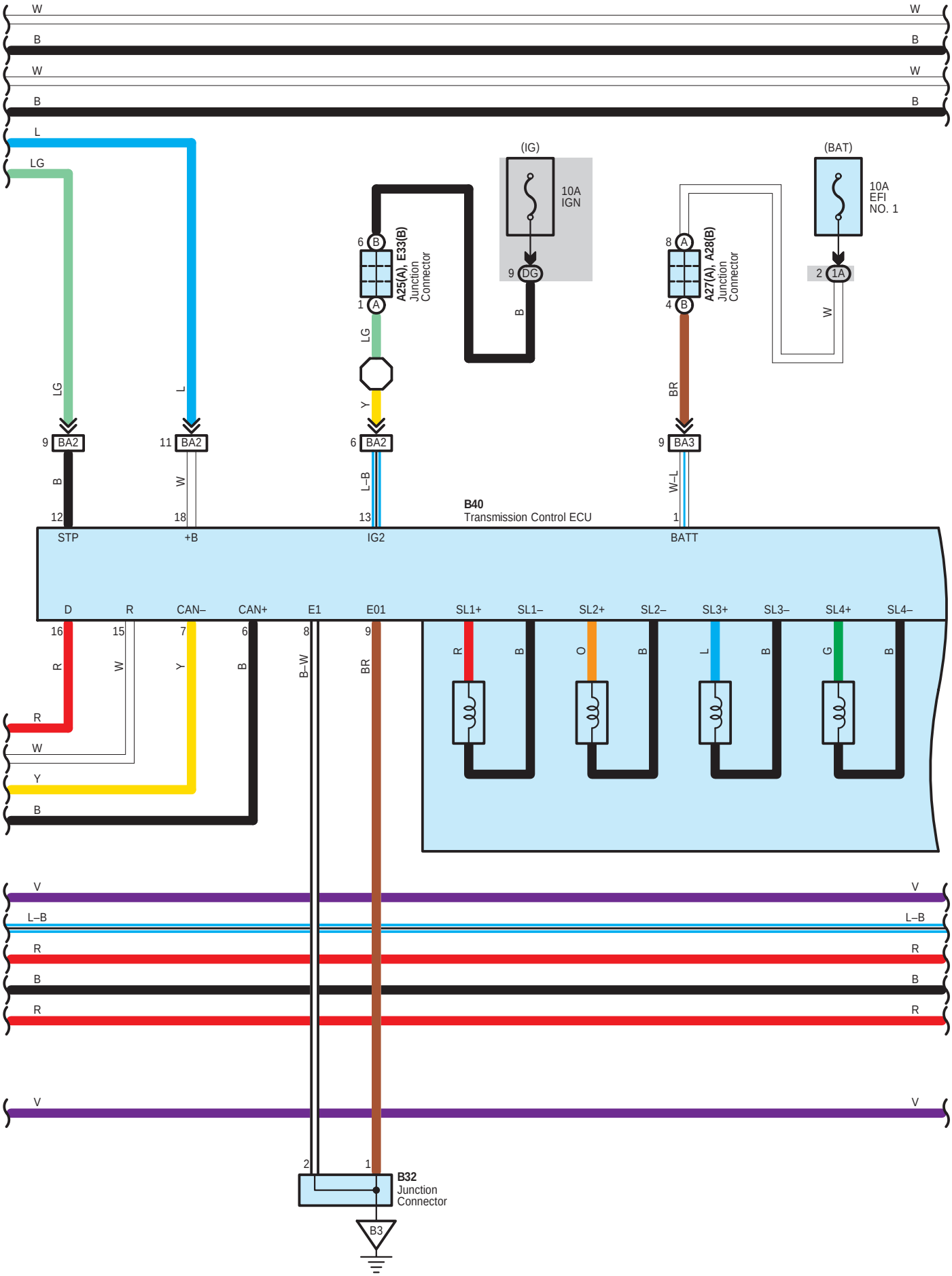
W
B
W
B
L
LG
(IG)
10A
IGN
(BAT)
10A
EFI
NO. 1
A25(A), E33(B)
Junction
Connector
A27(A), A28(B)
Junction
Connector
6 B
1 A
9 DG
8 A
4 B
2 1A
LG
Y
B
BR
W
L
9 BA2
11 BA2
6 BA2
9 BA3
B
W
L–B
W–L
12
18
13
1
B40
Transmission Control ECU
STP
+B
IG2
BATT
D
R
CAN–
CAN+
E1
E01
SL1+
SL1–
SL2+
SL2–
SL3+
SL3–
SL4+
SL4–
16
15
7
6
8
9
R
W
Y
B
B–W
BR
O
L
G
V
L–B
2
1
B32
Junction
Connector
B3

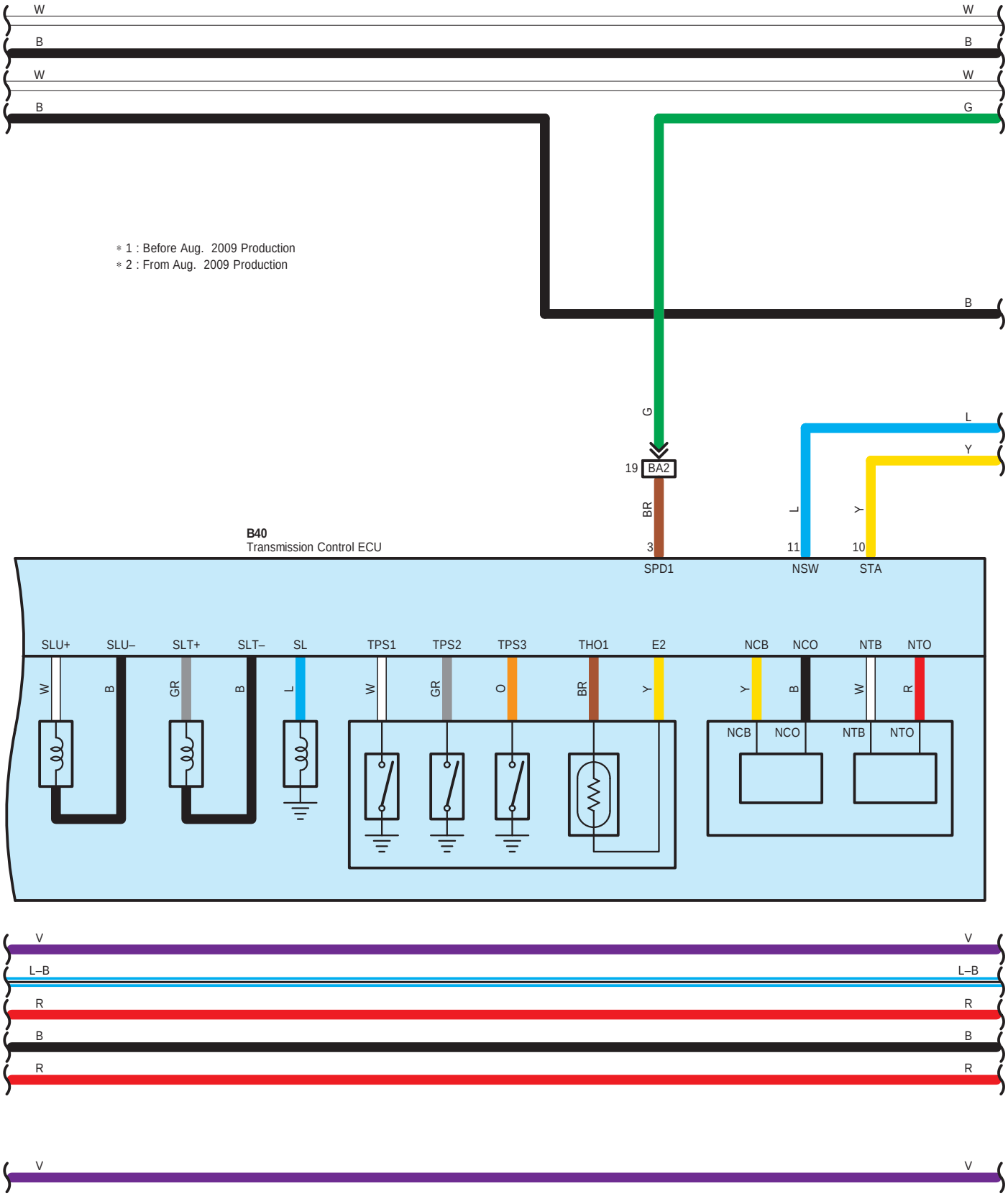
W
B
W
B
W
W
B
G
* 1 : Before Aug. 2009 Production
* 2 : From Aug. 2009 Production
B
G
L
Y
19
BA2
BR
L
Y
B40
Transmission Control ECU
3
11
10
SPD1
NSW
STA
SLU+
SLU–
SLT+
SLT–
SL
TPS1
TPS2
TPS3
THO1
E2
NCB
NCO
NTB
NTO
W
B
GR
B
L
W
GR
O
BR
Y
Y
B
W
R
NCB
NCO
NTB
NTO
V
V
L–B
L–B
R
R
B
B
R
R
V
V

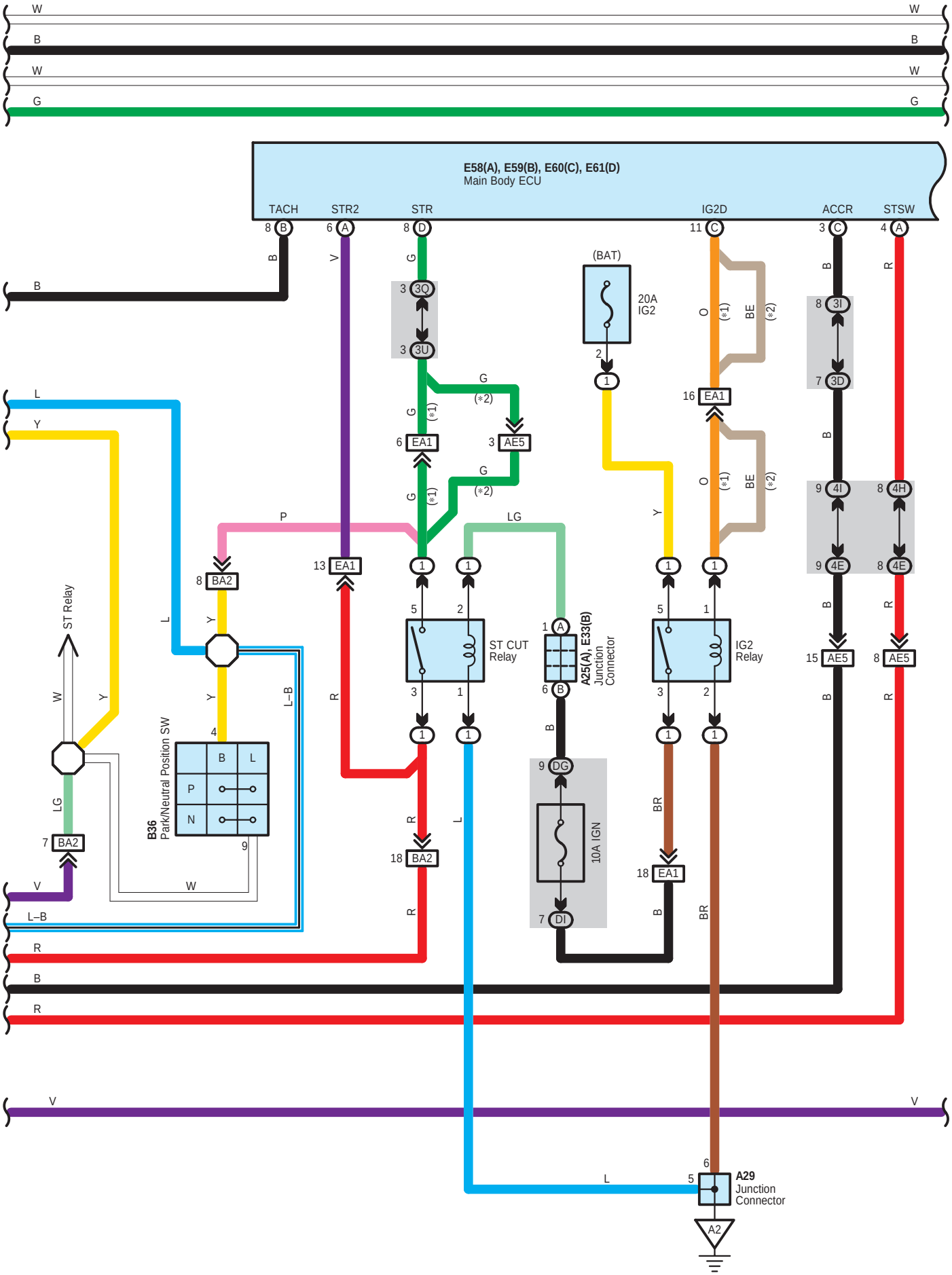
E58(A), E59(B), E60(C), E61(D)
Main Body ECU
TACH
STR2
STR
IG2D
ACCR
STSW
(BAT)
20A
IG2
ST CUT
Relay
IG2
Relay
A25(A), E33(B)
Junction
Connector
10A IGN
ST Relay
B36
Park/Neutral Position SW
A29
Junction
Connector
A2

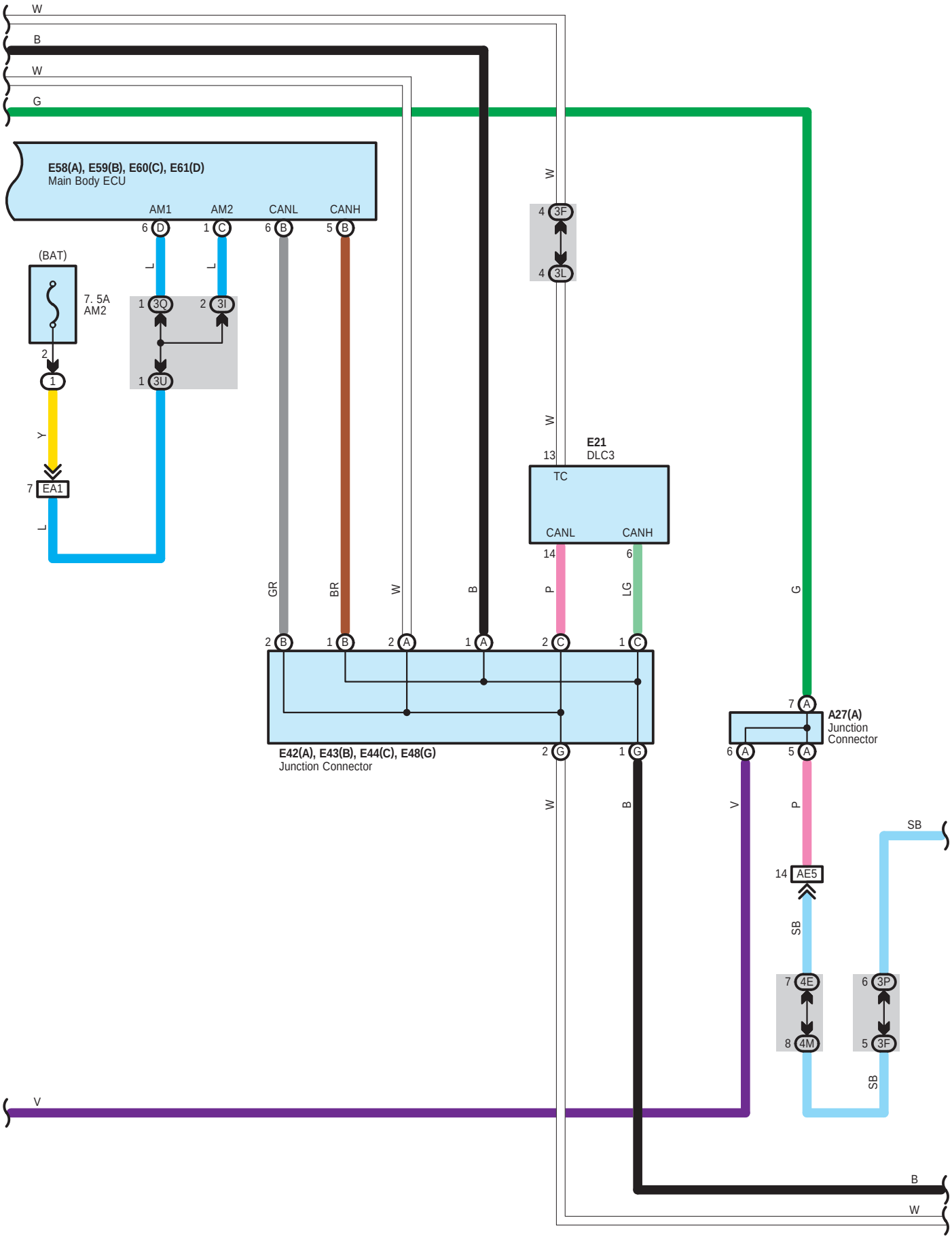
W
B
W
G
E58(A), E59(B), E60(C), E61(D)
Main Body ECU
AM1
AM2
CANL
CANH
6 D
1 C
6 B
5 B
(BAT)
7. 5A
AM2
2
1
Y
7 EA1
L
L
L
1 3Q
2 3I
1 3U
GR
BR
W
B
W
4 3F
4 3L
W
13
E21
DLC3
TC
CANL
CANH
14
6
P
LG
G
2 B
1 B
2 A
1 A
2 C
1 C
E42(A), E43(B), E44(C), E48(G)
Junction Connector
2 G
1 G
7 A
A27(A)
Junction
Connector
6 A
5 A
W
B
V
P
SB
14 AE5
SB
7 4E
8 4M
6 3P
5 3F
SB
V
B
W

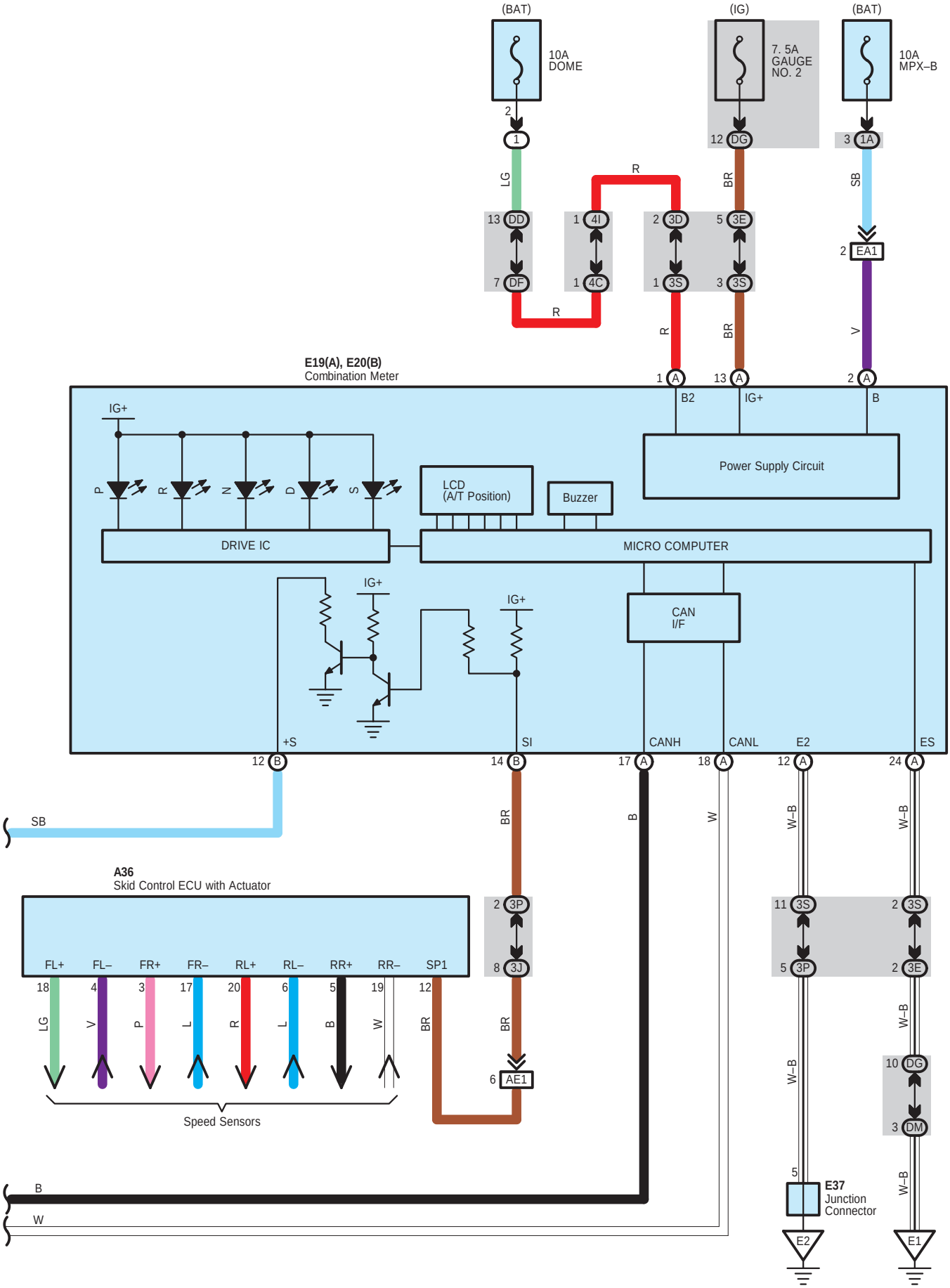
(BAT)
10A
DOME
(IG)
7. 5A
GAUGE
NO. 2
(BAT)
10A
MPX–B
E19(A), E20(B)
Combination Meter
IG+
P
R
N
D
S
LCD
(A/T Position)
Buzzer
Power Supply Circuit
DRIVE IC
MICRO COMPUTER
CAN
I/F
+S
SI
CANH
CANL
E2
ES
A36
Skid Control ECU with Actuator
FL+
FL–
FR+
FR–
RL+
RL–
RR+
RR–
SP1
Speed Sensors
E37
Junction
Connector
E2
E1

A 2
Black

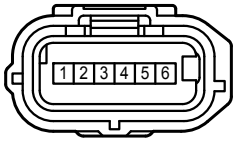

A 10
Black

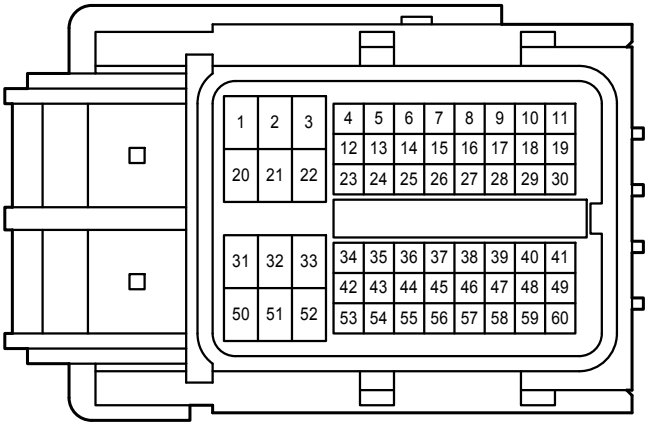

A 25
Black

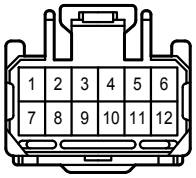

A 26
Blue

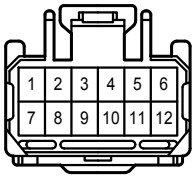

A 27
White

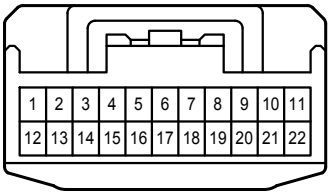

A 28
White

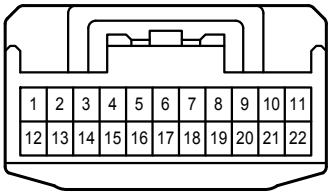

A 29
Gray

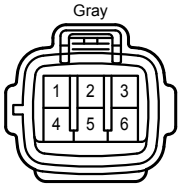

A 36
Black

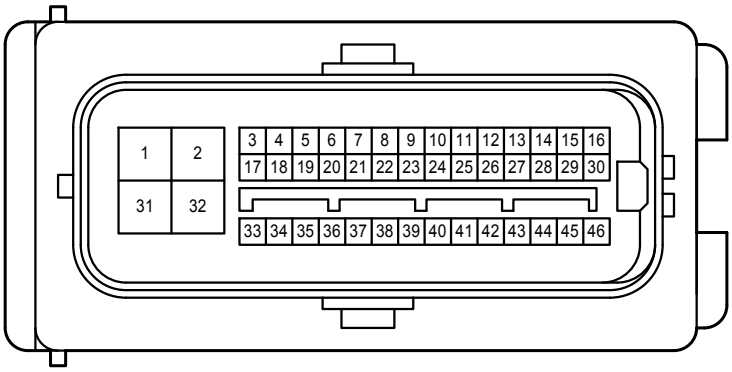

A 40
Blue

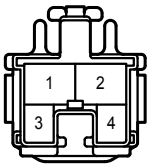

B 9
Black

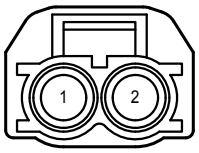

B 12
Black

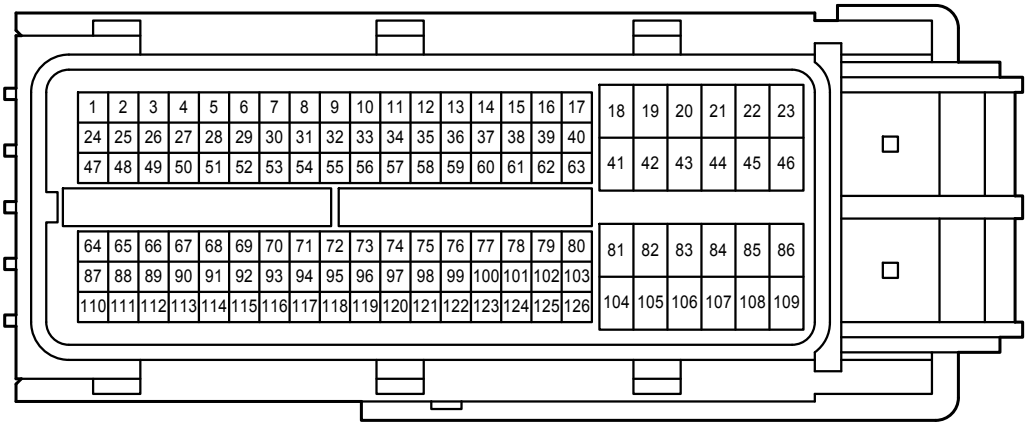

B 13
Black

B 32
Gray

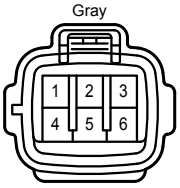

B 36
Gray

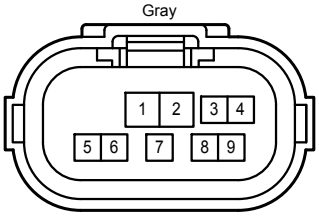

B 39
Black

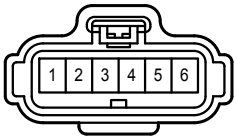

B 40
Black

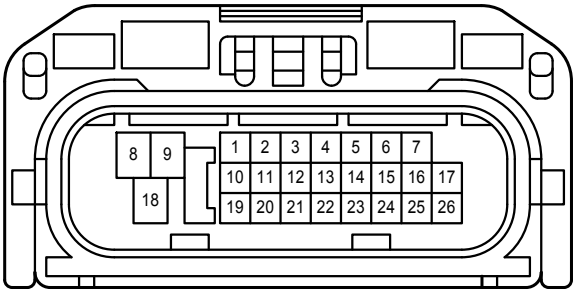

E 19
White

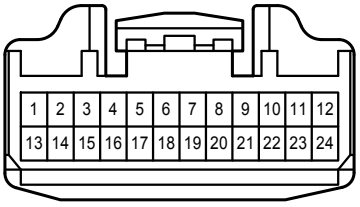

E 20
White

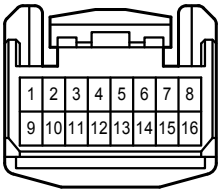

E 21
Black

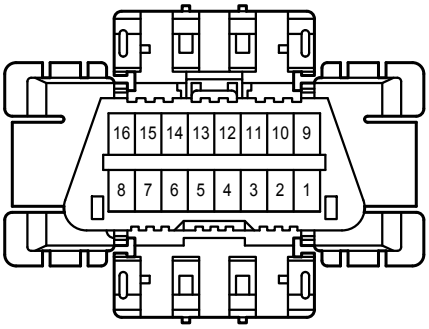

E 33
Black

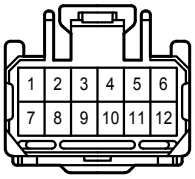

E 34
Blue

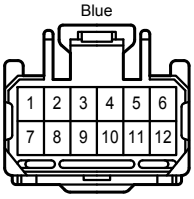

E 37
White

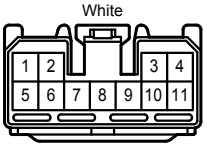

E 42
White

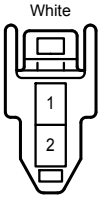

E 43
White

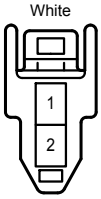

E 44
White

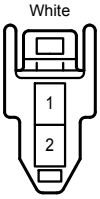

E 48
White

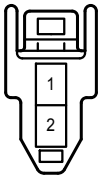

E 58
White

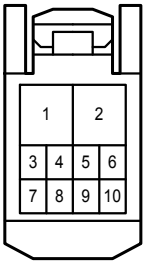

E 59
White

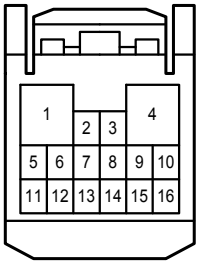

E 60
White

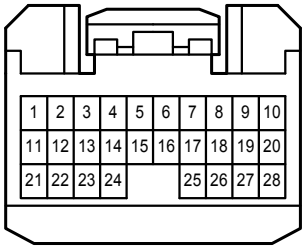

E 61
White

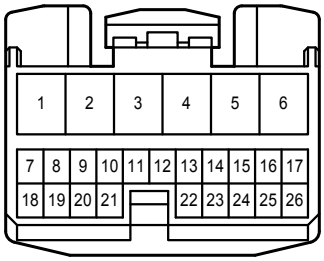

E 84
White

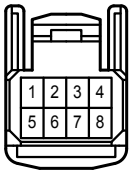

1A
White

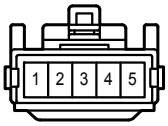

1E
Black

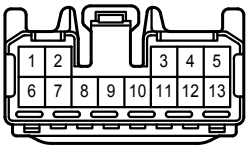

3A
White

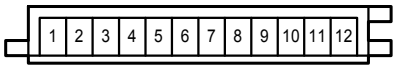

3D
White

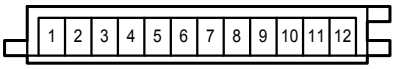

3E
Gray

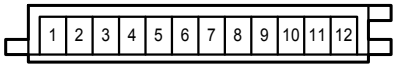

3F
White

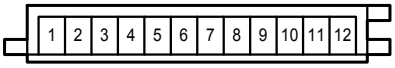

3I
White

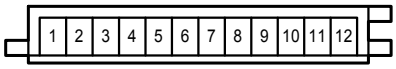

3J
Gray

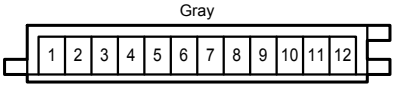

3L
Gray

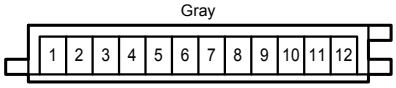

3P
White

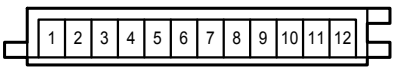

3Q
Gray

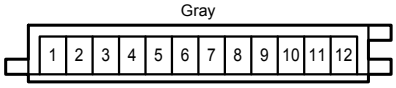

3S
Gray

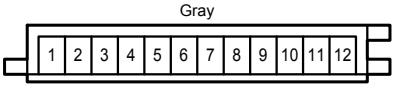

3U
Gray

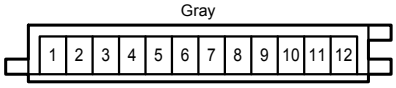

4C
White

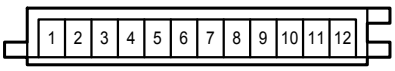

4D
Gray

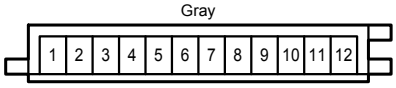

4E
White

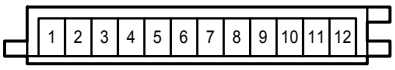

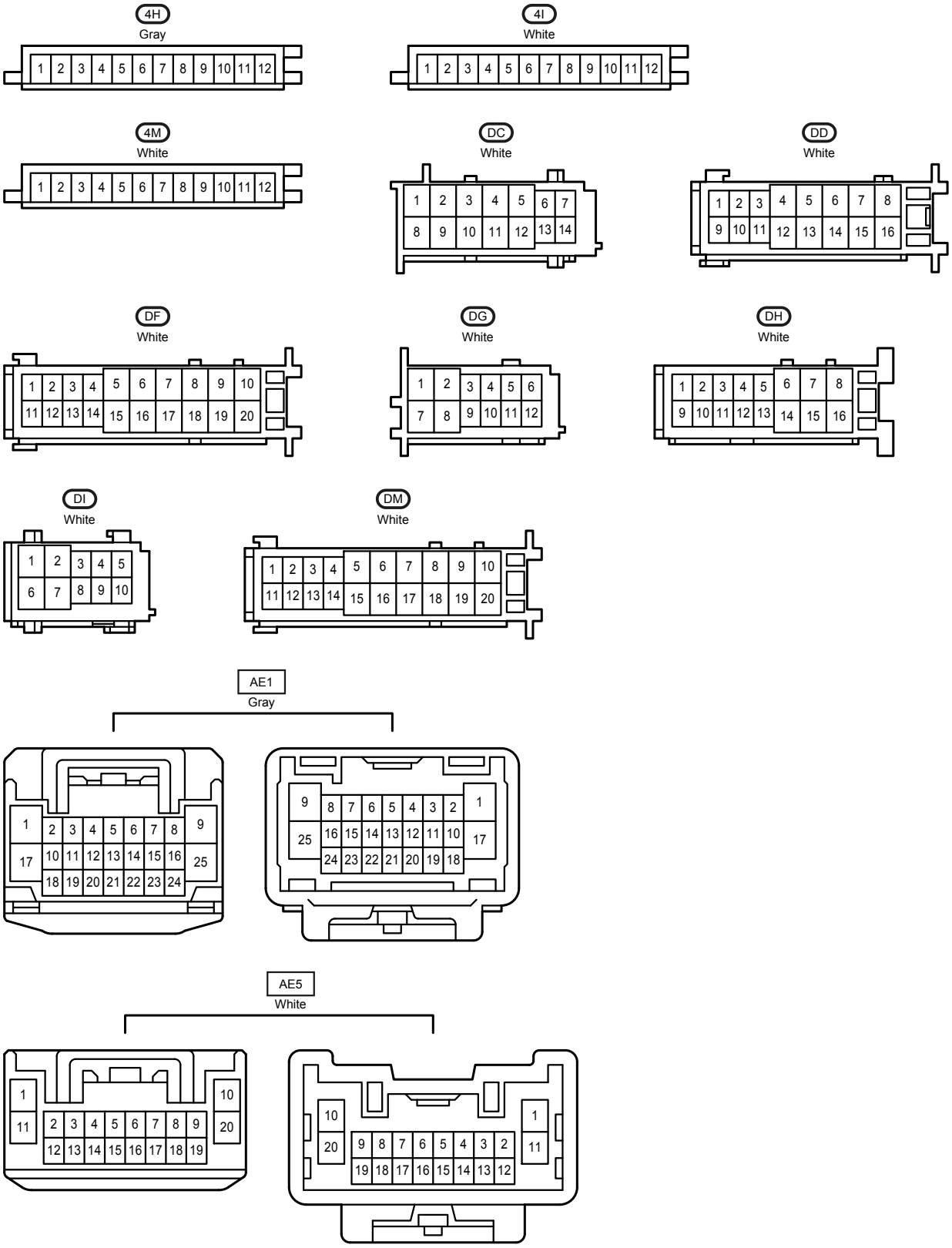
4H
Gray
4I
White
4M
White
DC
White
DD
White
DF
White
DG
White
DH
White
DI
White
DM
White
AE1
Gray
AE5
White

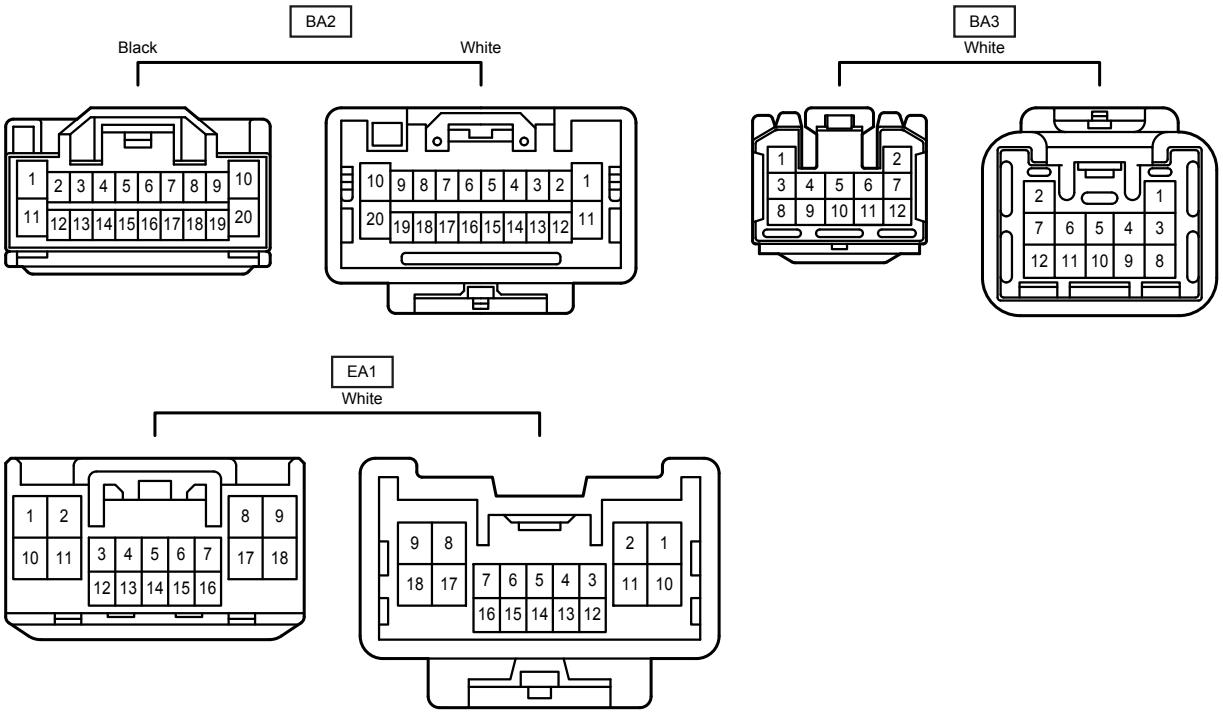
BA2
Black
White
BA3
White
EA1
White