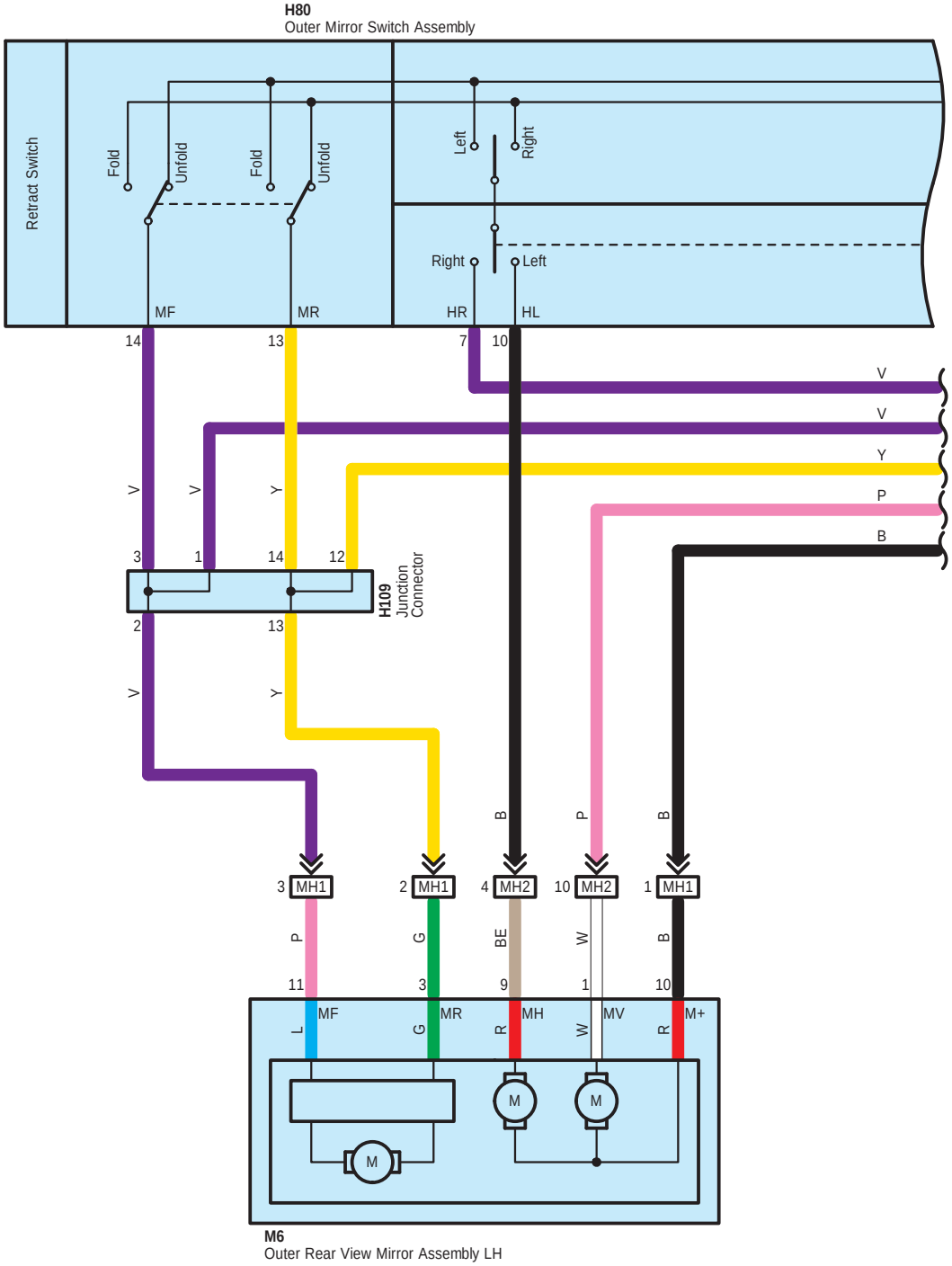
H80
Outer Mirror Switch Assembly
Retract Switch
Fold
Unfold
Fold
Unfold
Left
Right
Right
Left
MF
MR
HR
HL
14
13
7
10
V
V
Y
P
B
V
V
Y
3
1
14
12
H109
Junction
Connector
2
13
V
Y
B
P
B
3 MH1
2 MH1
4 MH2
10 MH2
1 MH1
P
G
BE
W
B
11
3
9
1
10
L MF
G MR
R MH
W MV
R M+
M
M
M
M6
Outer Rear View Mirror Assembly LH

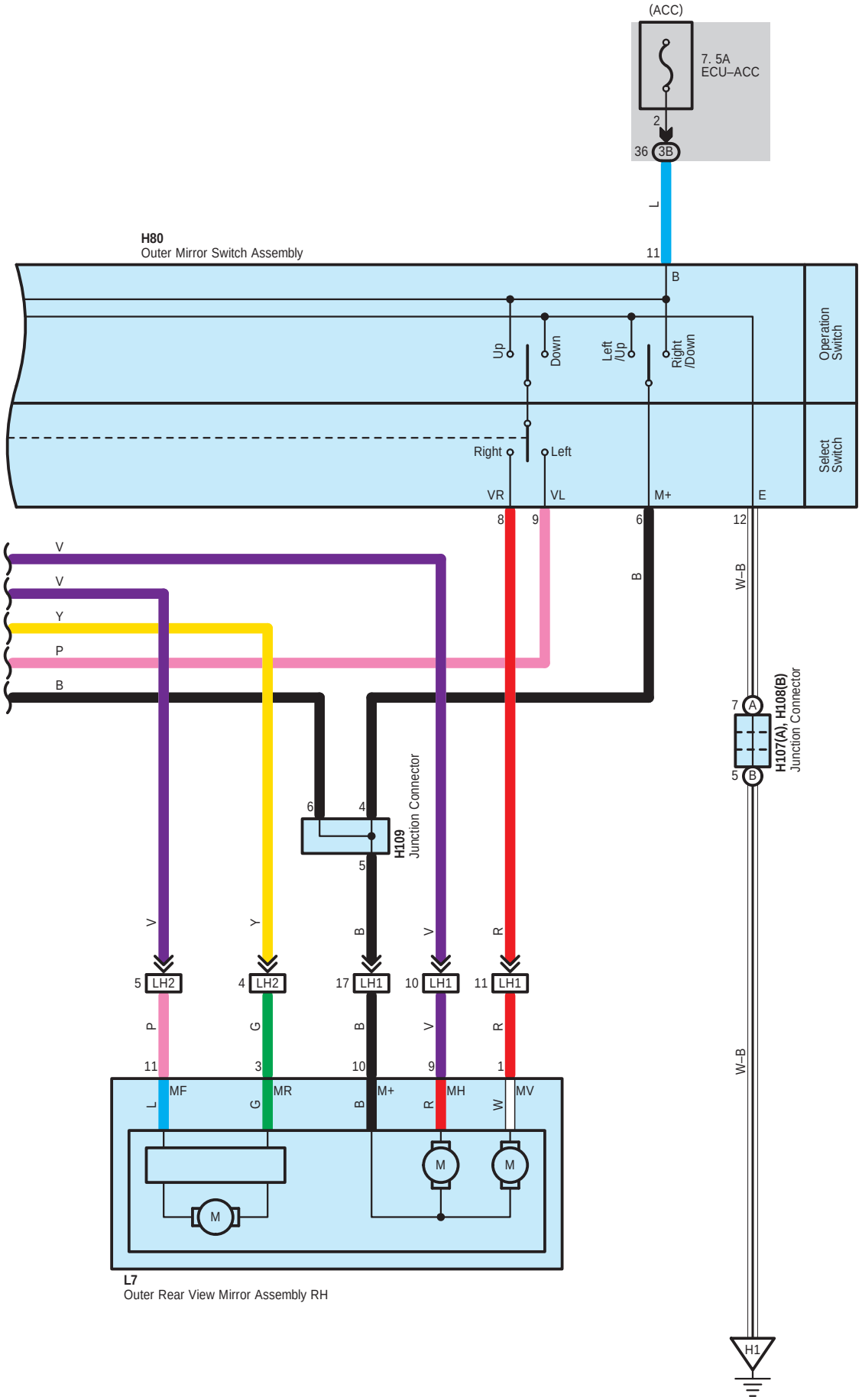
(ACC)
7. 5A
ECU–ACC
2
36
3B
L
H80
Outer Mirror Switch Assembly
11
B
Up
Down
Left
/Up
Right
/Down
Operation
Switch
Right
Left
Select
Switch
VR
VL
M+
E
8
9
6
12
V
V
Y
P
B
B
W–B
7
A
5
B
H107(A), H108(B)
Junction Connector
6
4
5
H109
Junction Connector
V
Y
B
V
R
5
LH2
4
LH2
17
LH1
10
LH1
11
LH1
P
G
B
V
R
11
3
10
9
1
L
MF
G
MR
B
M+
R
MH
W
MV
M
M
M
W–B
L7
Outer Rear View Mirror Assembly RH
H1

H 80
Black

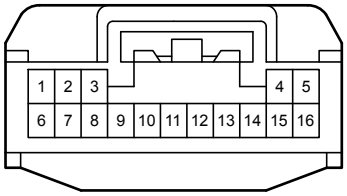

H107
Gray

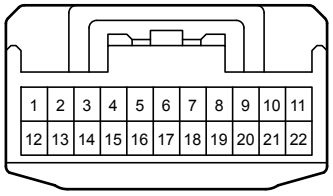

H108
Gray

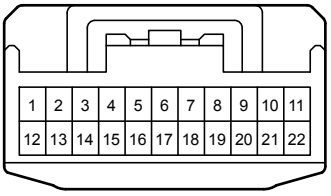

H109
Black

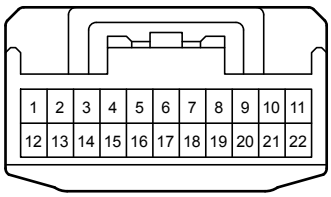

L 7
White

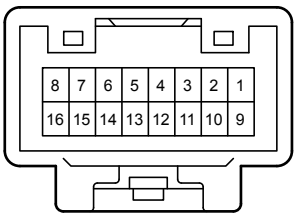

M 6
White

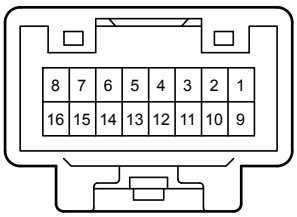

3B
White

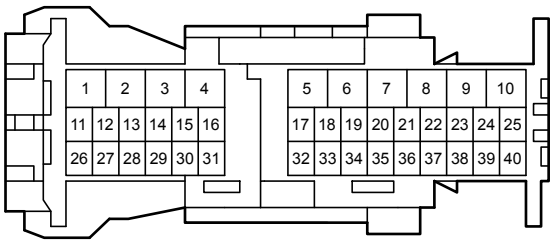

LH1
Gray

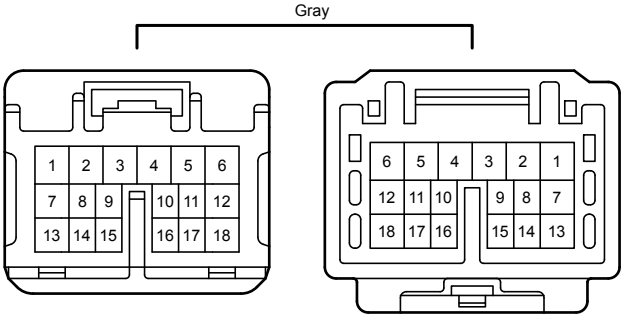

LH2
Blue

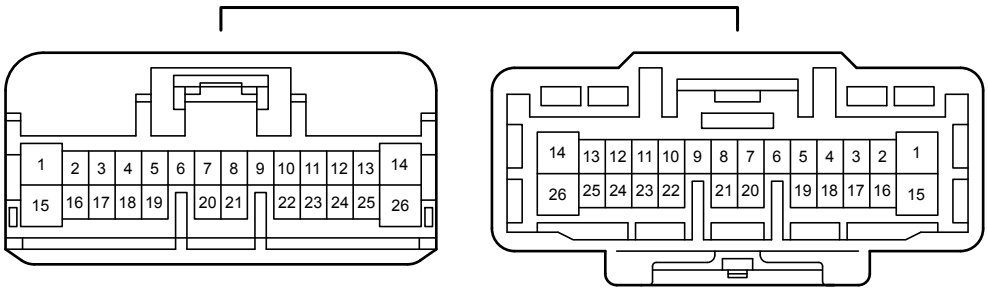

MH1
Blue

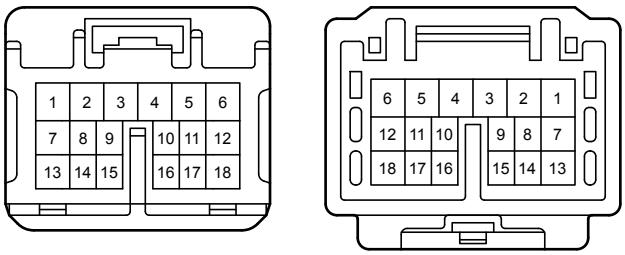

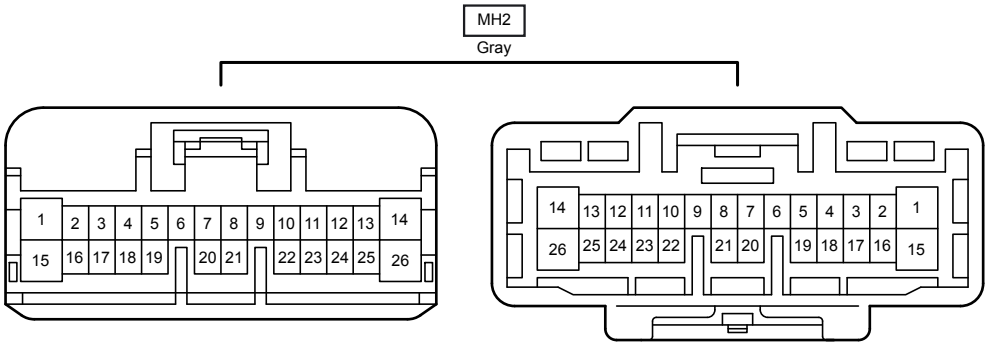
MH2
Gray
1 2 3 4 5 6 7 8 9 10 11 12 13 14
15 16 17 18 19 20 21 22 23 24 25 26
14 13 12 11 10 9 8 7 6 5 4 3 2 1
26 25 24 23 22 21 20 19 18 17 16 15