(Cont. next page)

Power Source (A25A-FXS)

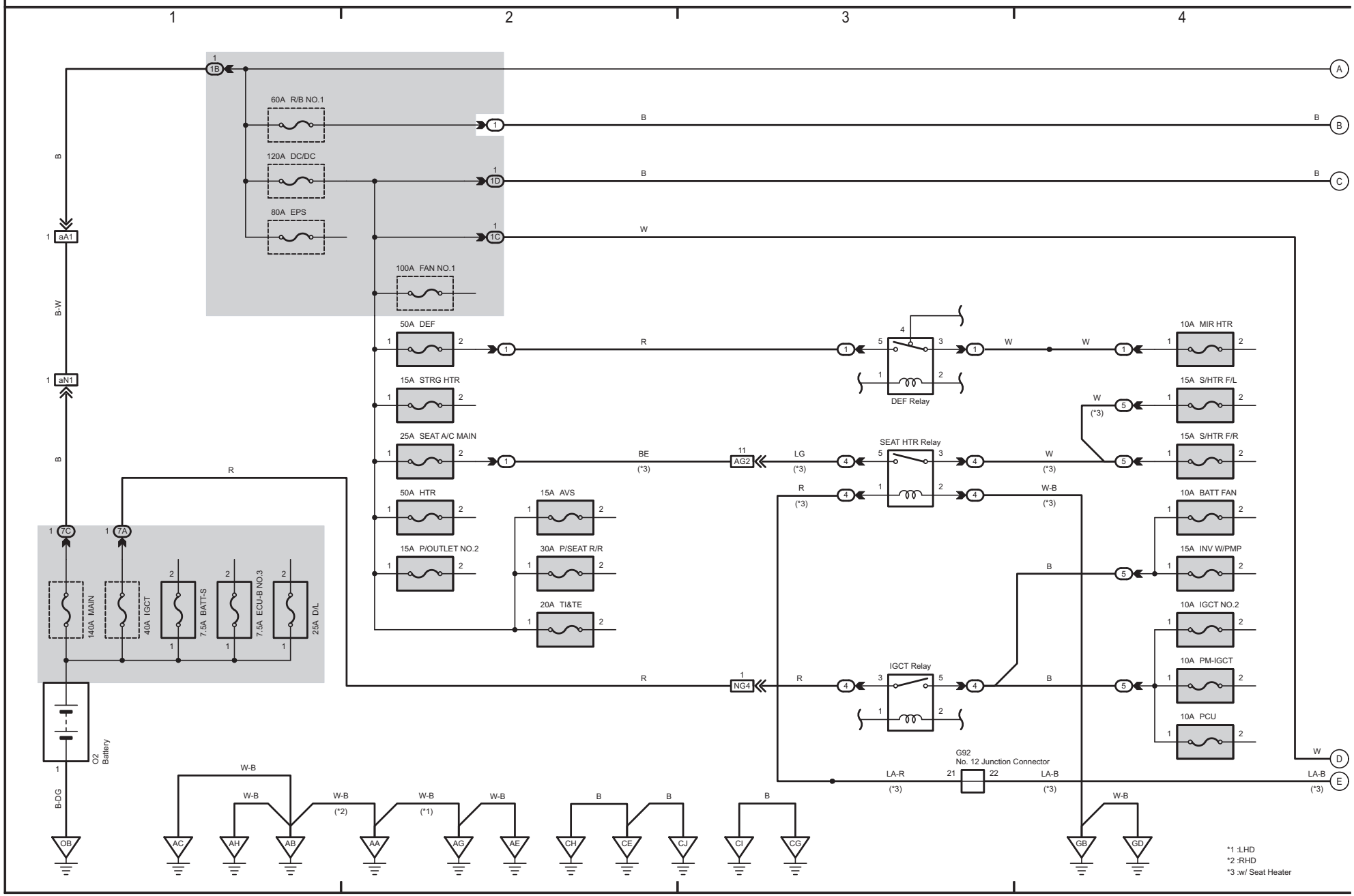

(Cont. next page)

Power Source (A25A-FXS)

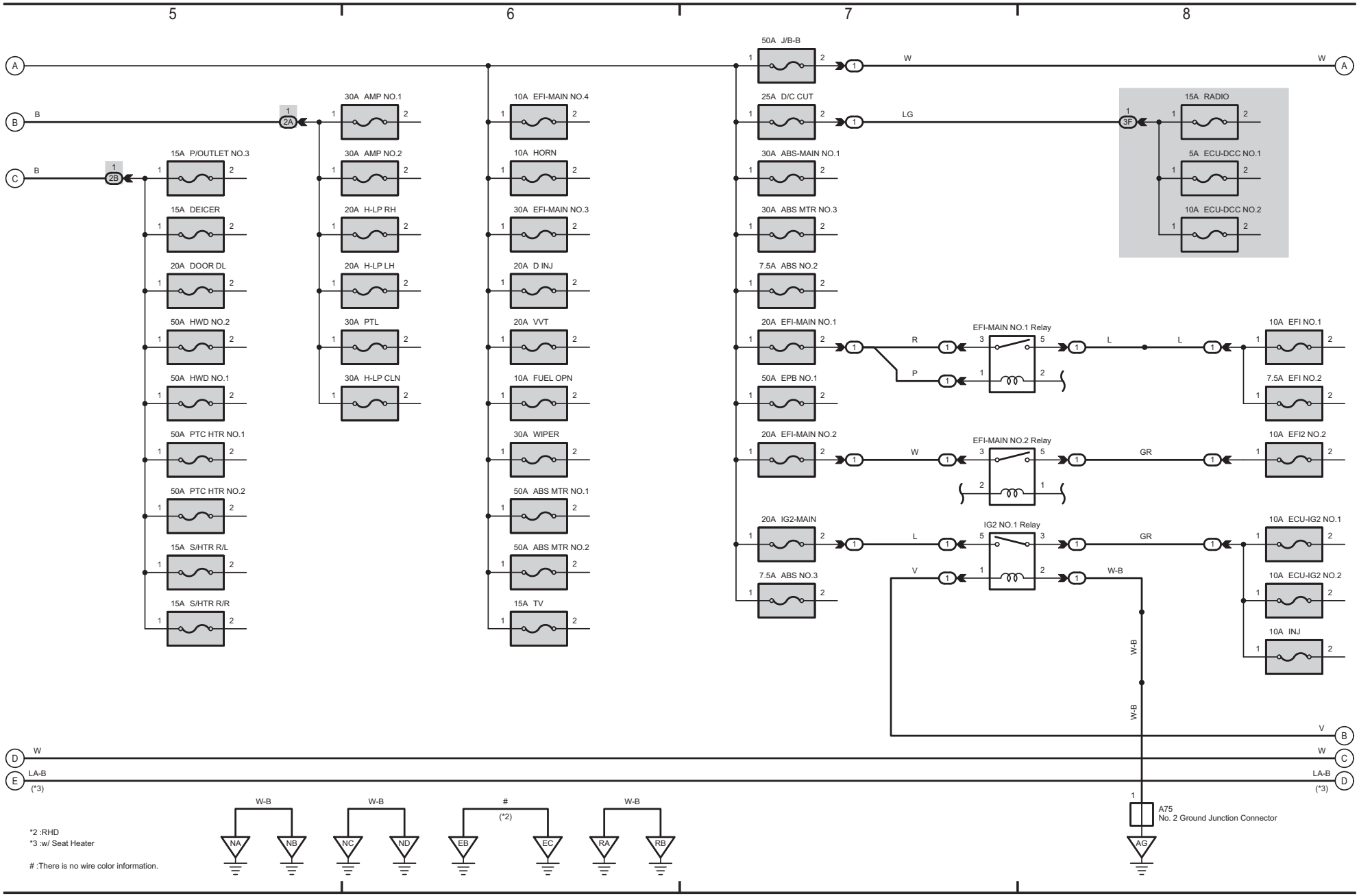

*2 :RHD
*3 :w/ Seat Heater

:There is no wire color information.
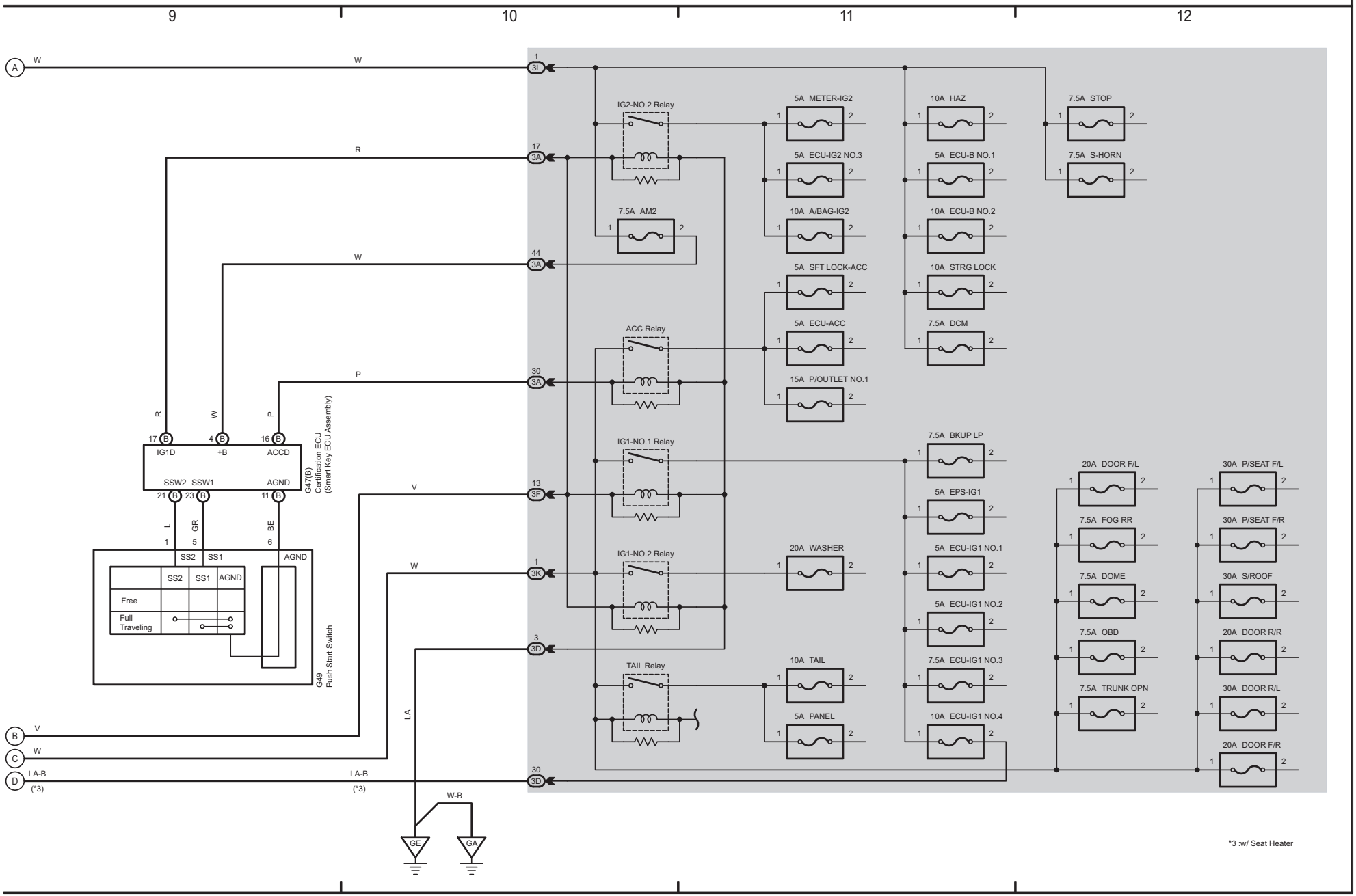
Power Source (A25A-FXS)