(Cont. next page)

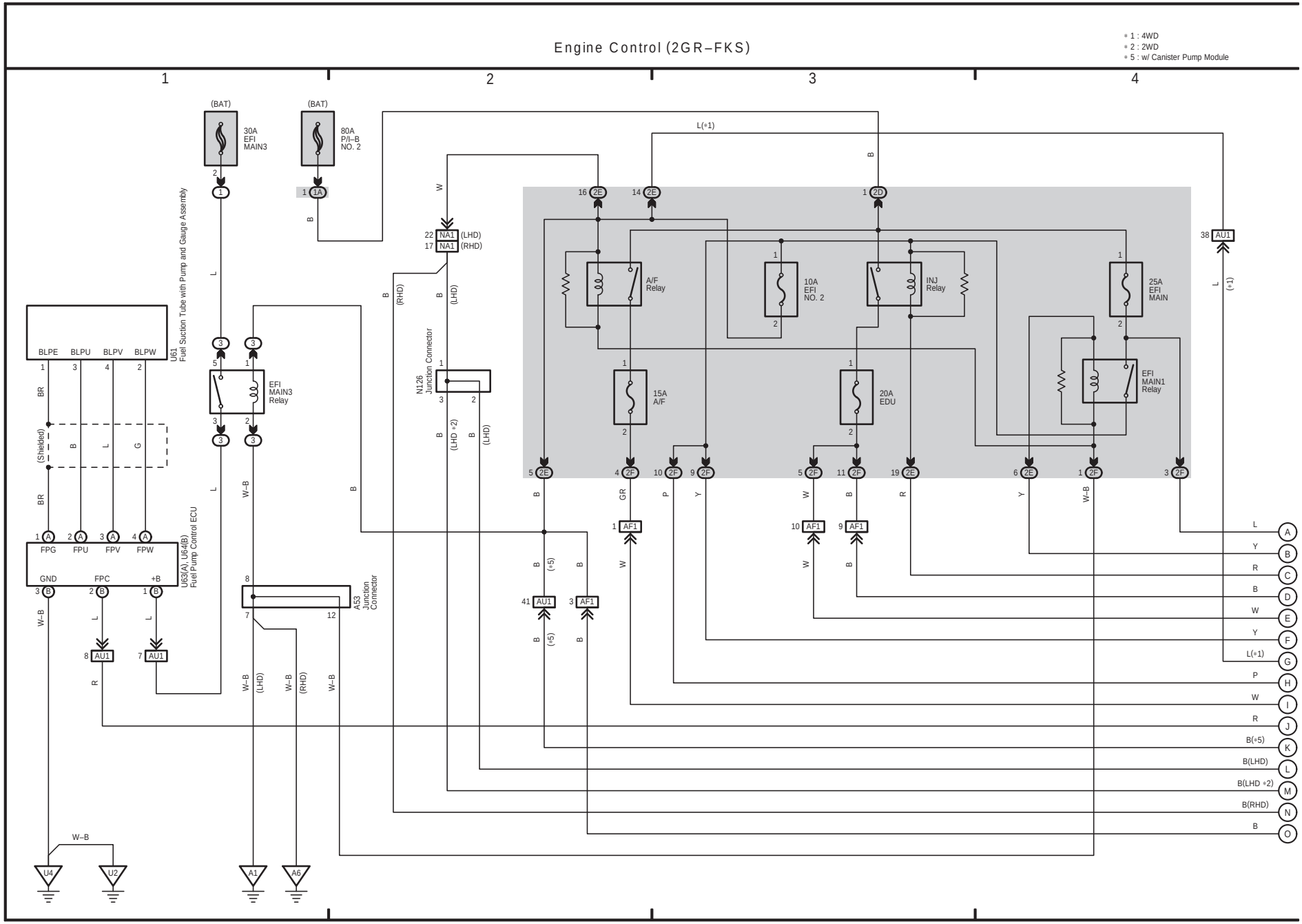

(Cont. next page)

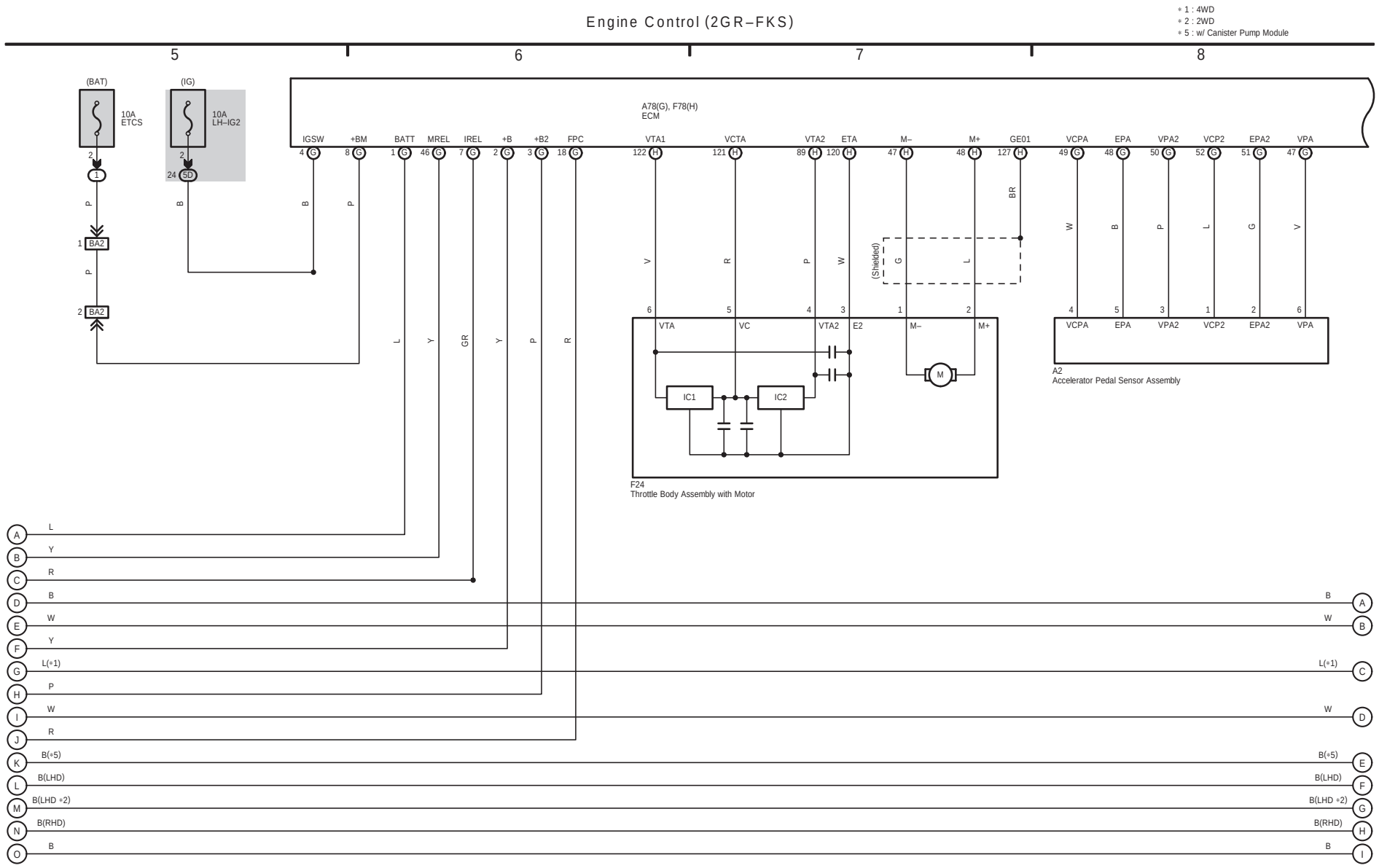

## 65 GS 350 / GS 250 / GS 200t / GS 300 (Cont' d)

(Cont. next page)

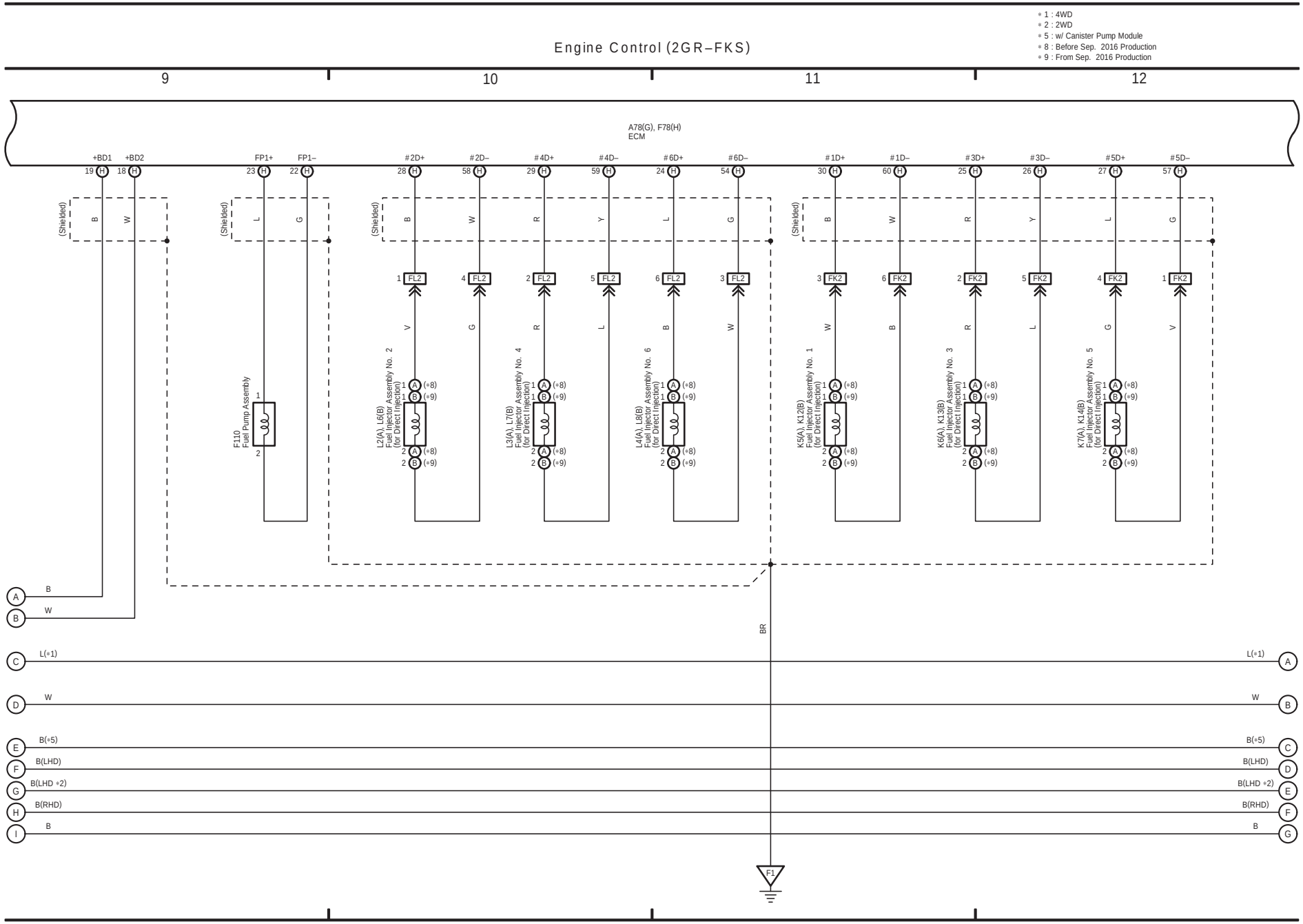

(Cont. next page)

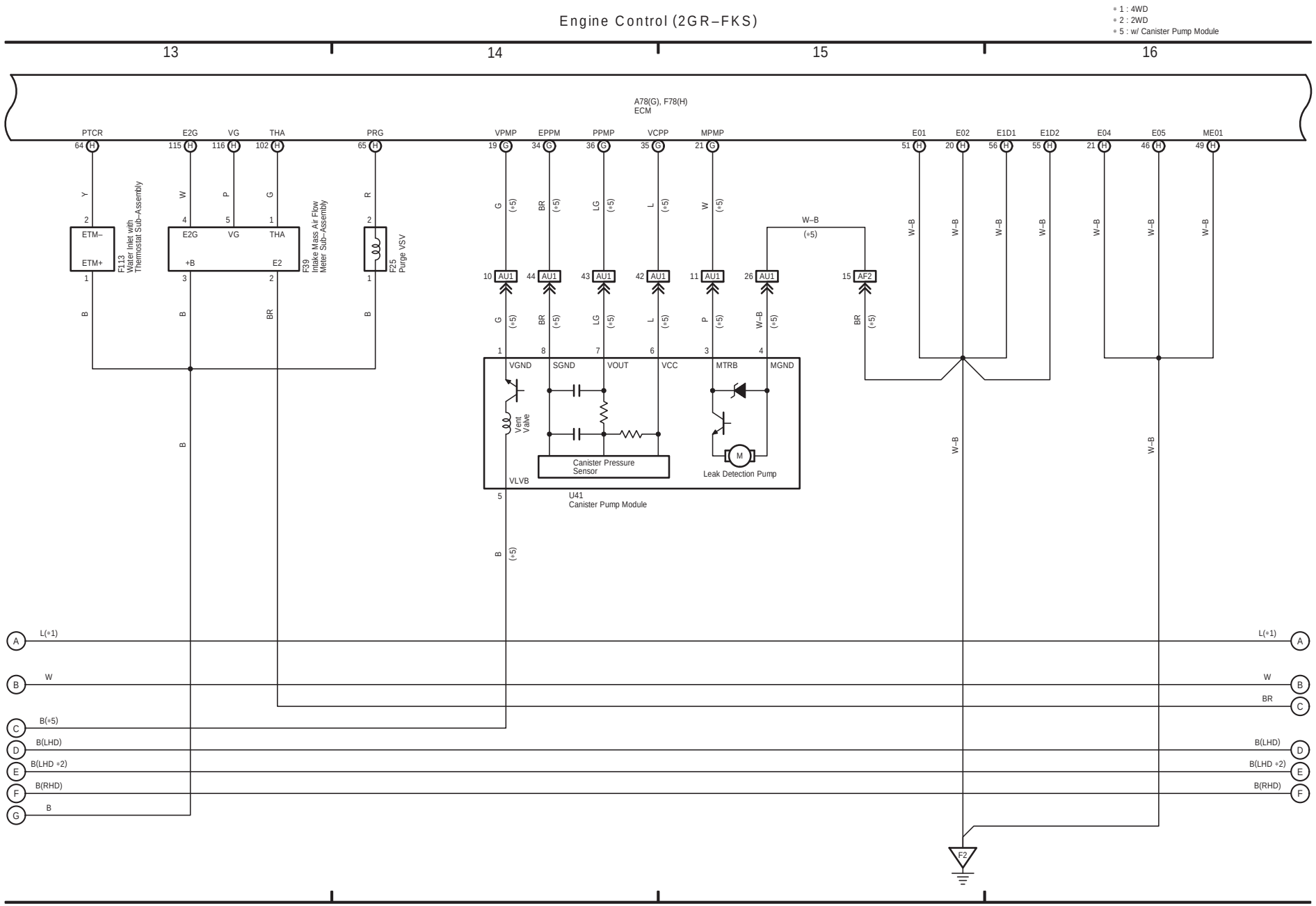

## 65 GS 350 / GS 250 / GS 200t / GS 300 (Cont' d)

(Cont. next page)

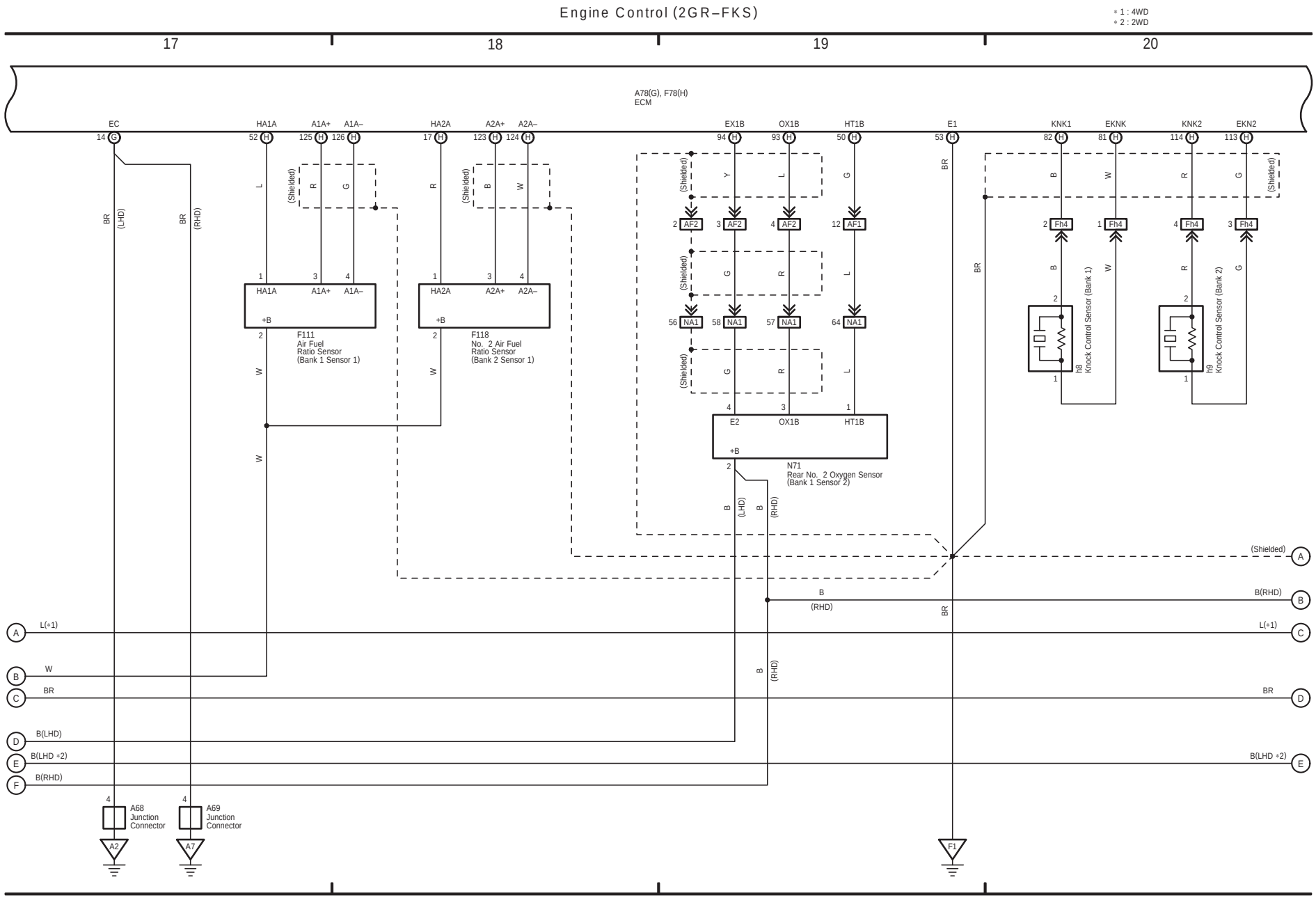

(Cont. next page)

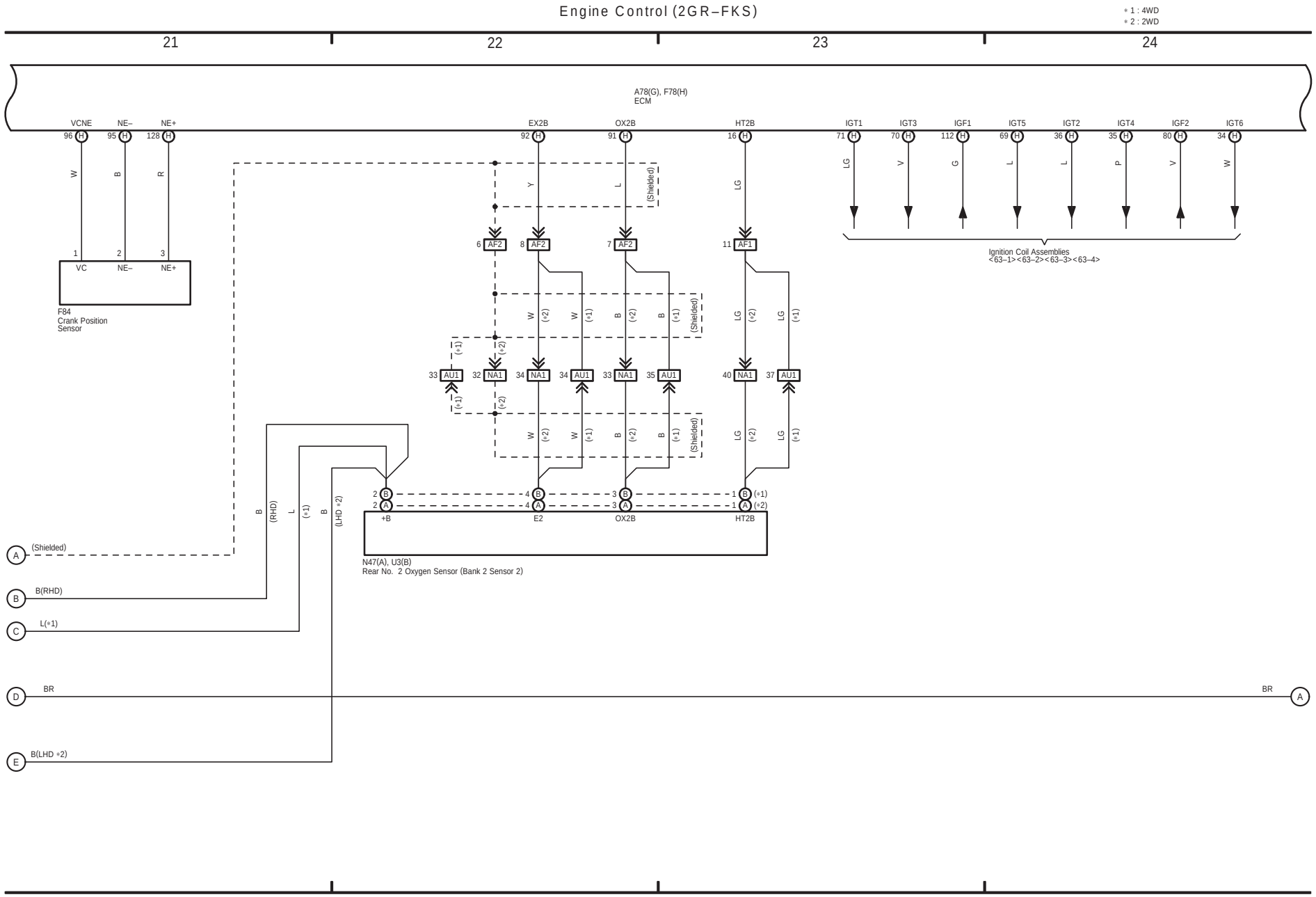

## 65 GS 350 / GS 250 / GS 200t / GS 300 (Cont' d)

(Cont. next page)

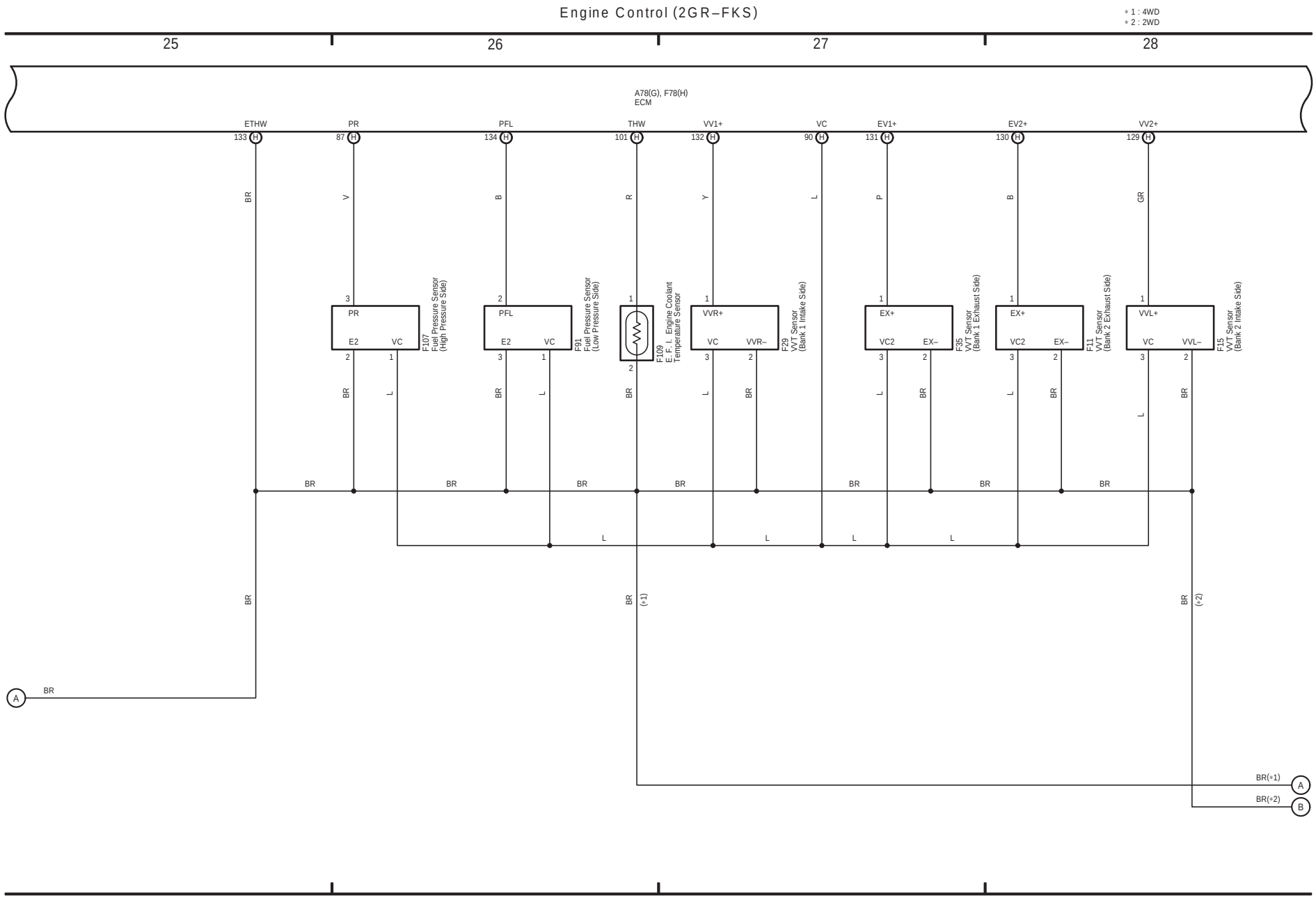

(Cont. next page)

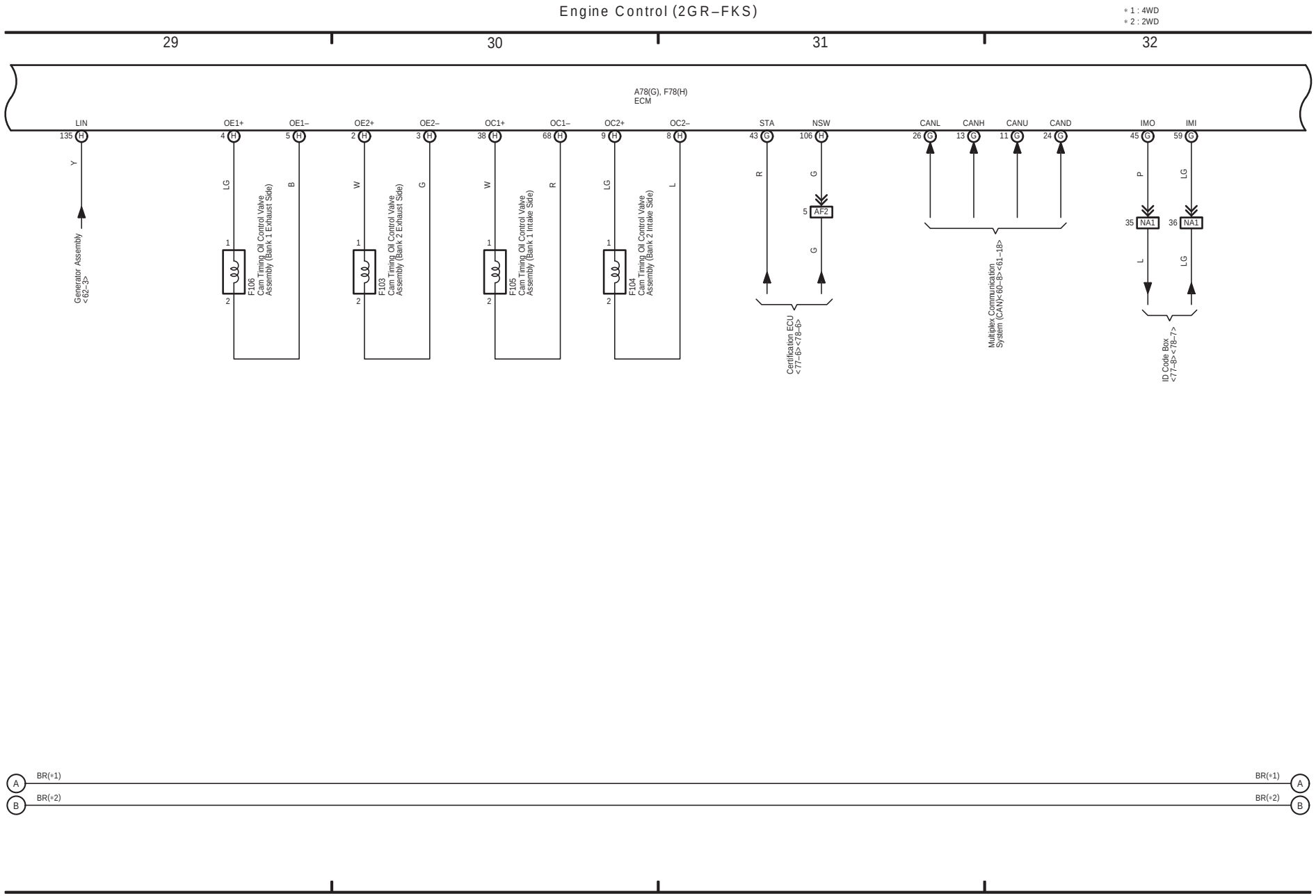

## 65 GS 350 / GS 250 / GS 200t / GS 300 (Cont' d)

(Cont. next page)

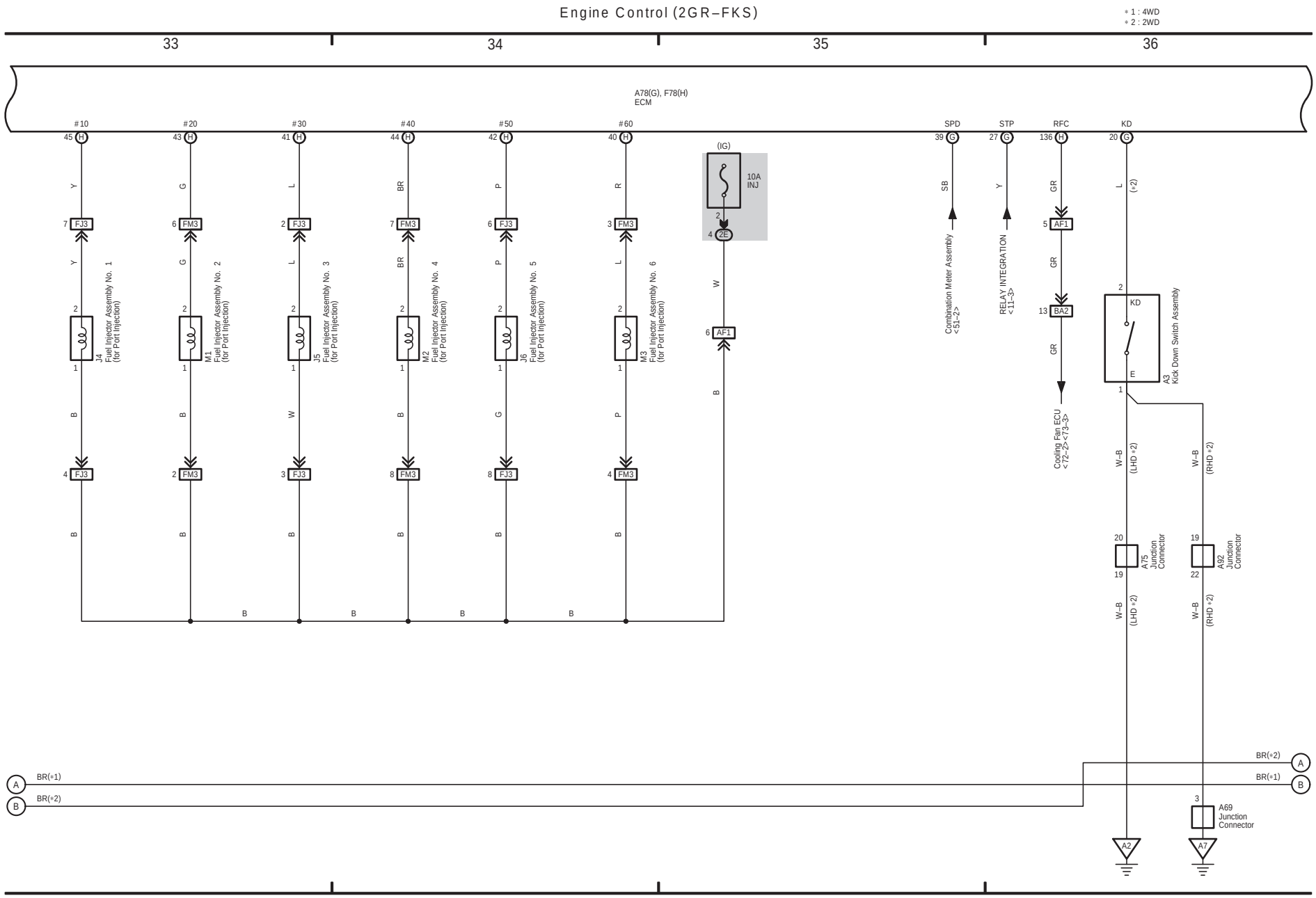

(Cont. next page)

Cruise Control (2GR–FKS) or Dynamic Radar Cruise Control (2GR–FKS), Pre–Crash Safety System (2GR–FKS)

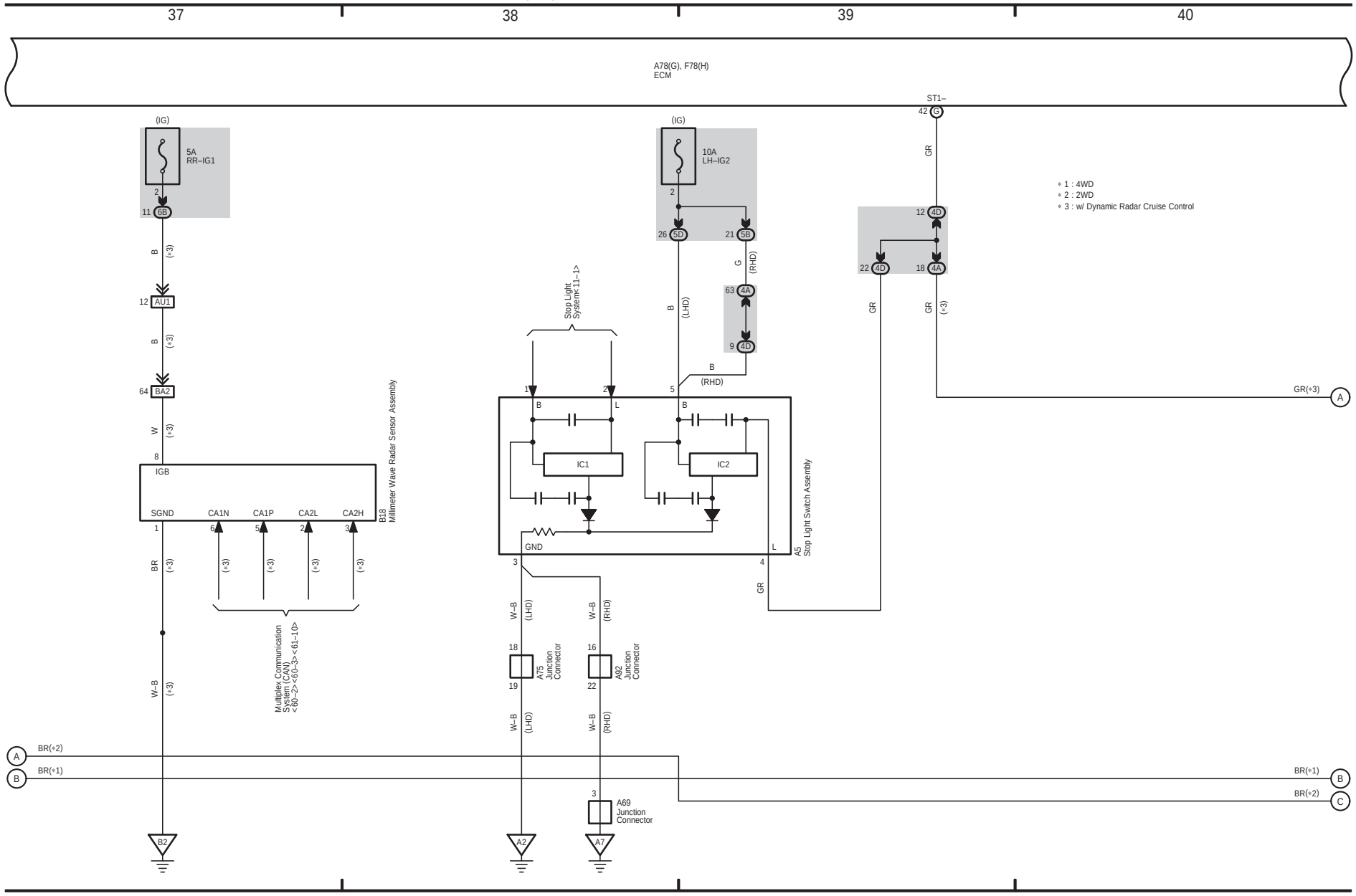

## 65 GS 350 / GS 250 / GS 200t / GS 300 (Cont' d)

(Cont. next page)

Cruise Control (2GR–FKS) or Dynamic Radar Cruise Control (2GR–FKS), Pre–Crash Safety System (2GR–FKS)

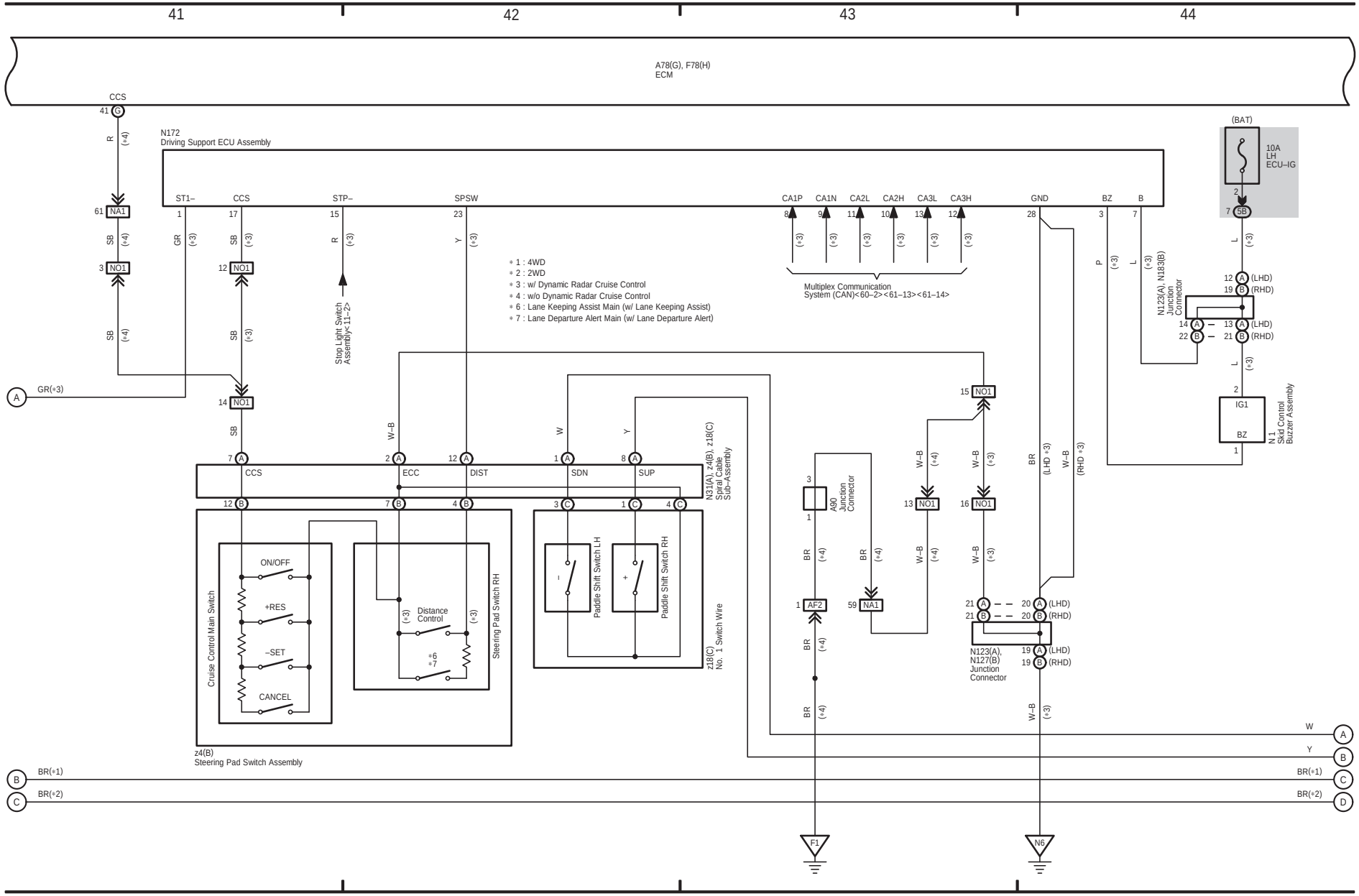

(Cont. next page)

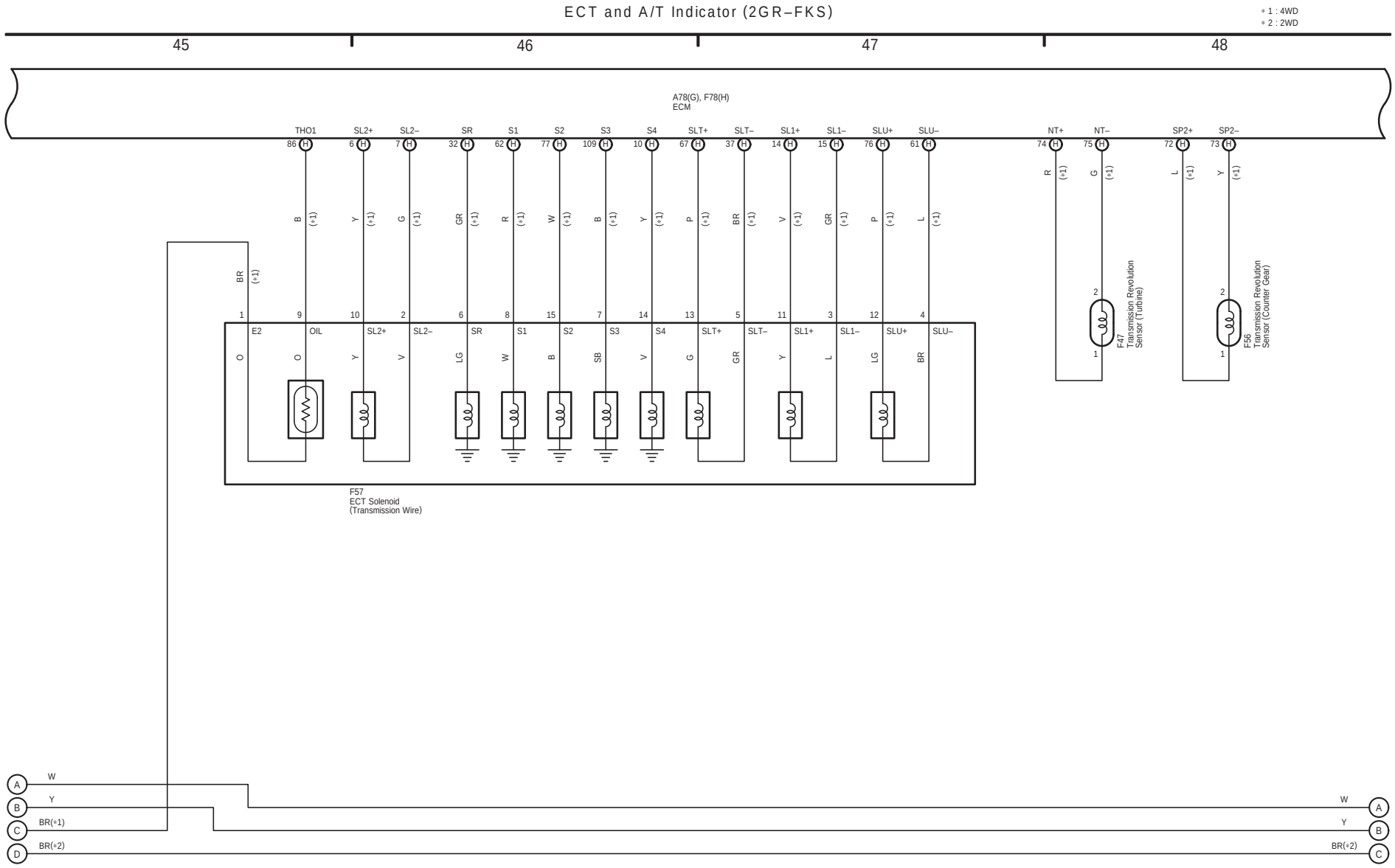

## 65 GS 350 / GS 250 / GS 200t / GS 300 (Cont' d)

(Cont. next page)

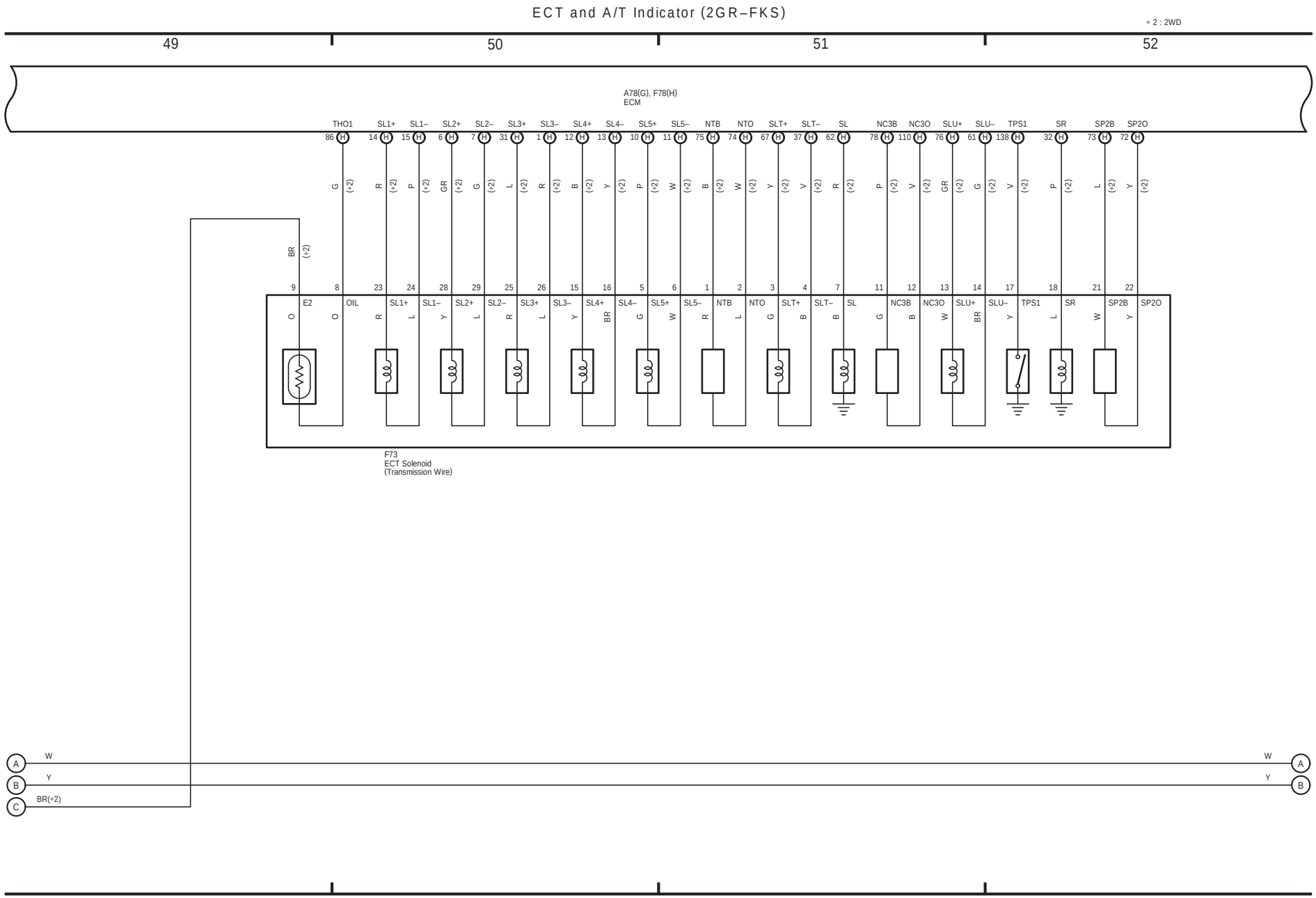

(Cont. next page)

ECT and A/T Indicator (2GR–FKS)

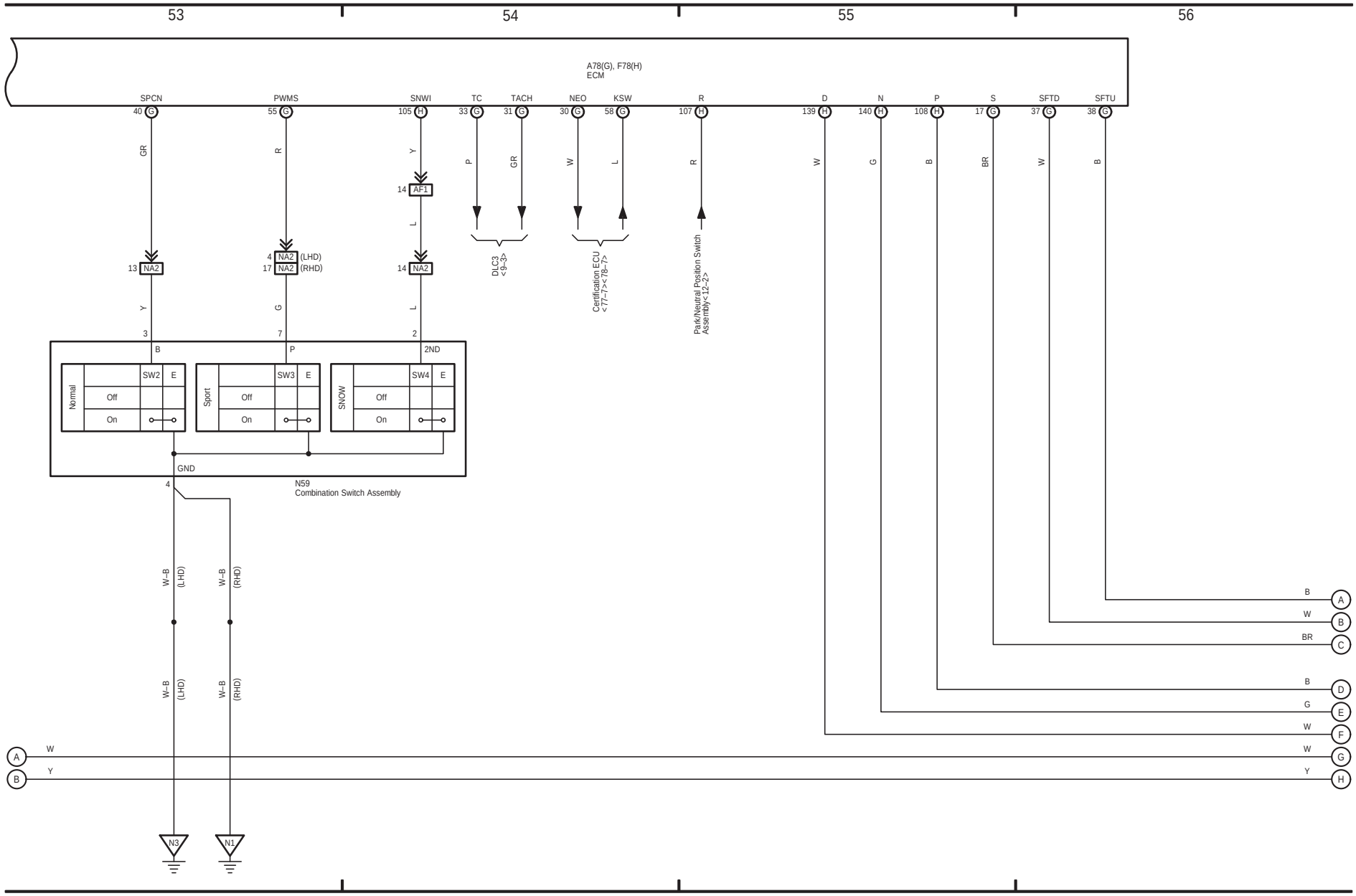

## 65 GS 350 / GS 250 / GS 200t / GS 300 (Cont' d)

(Cont. next page)

ECT and A/T Indicator (2GR–FKS)

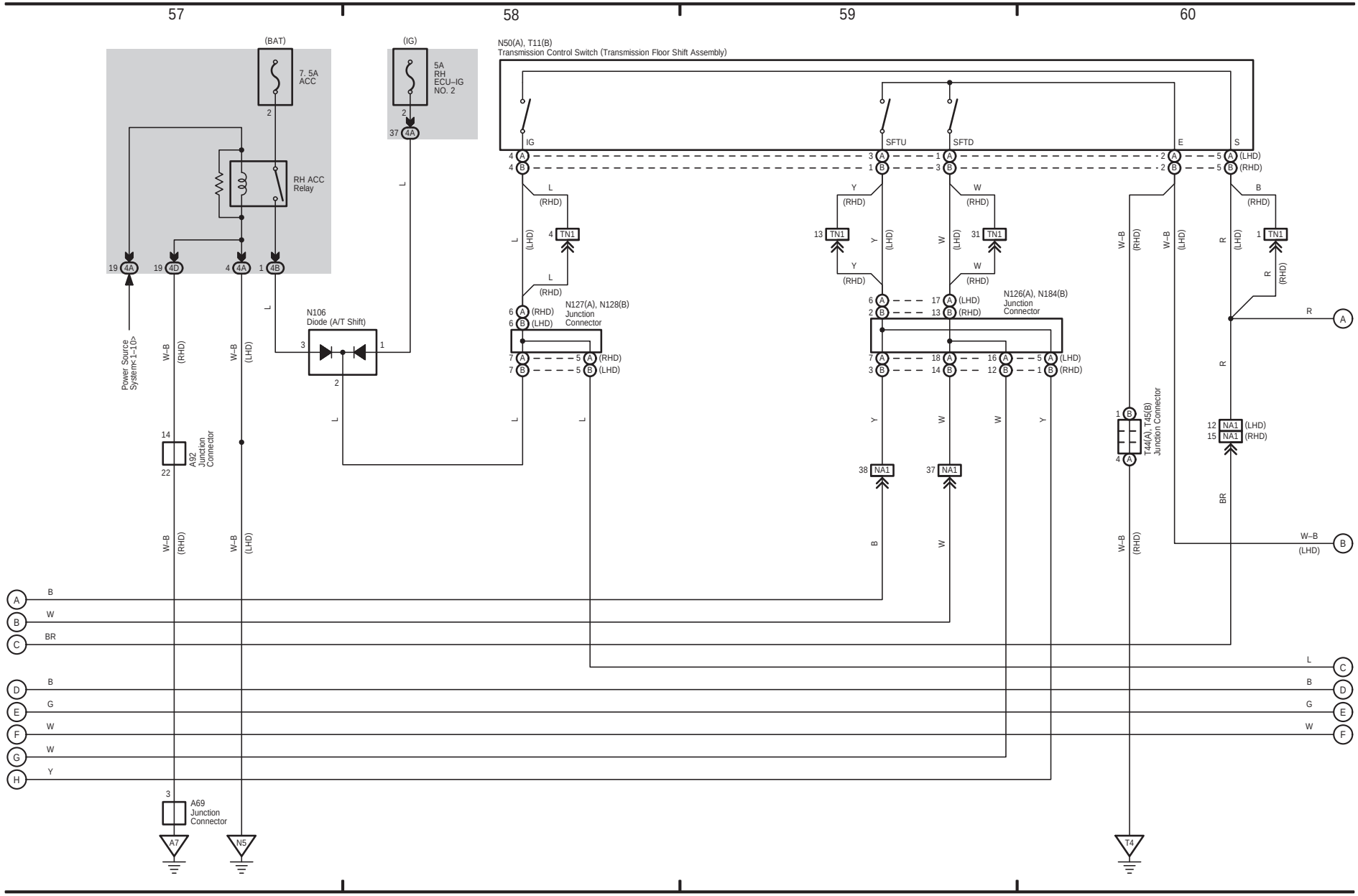

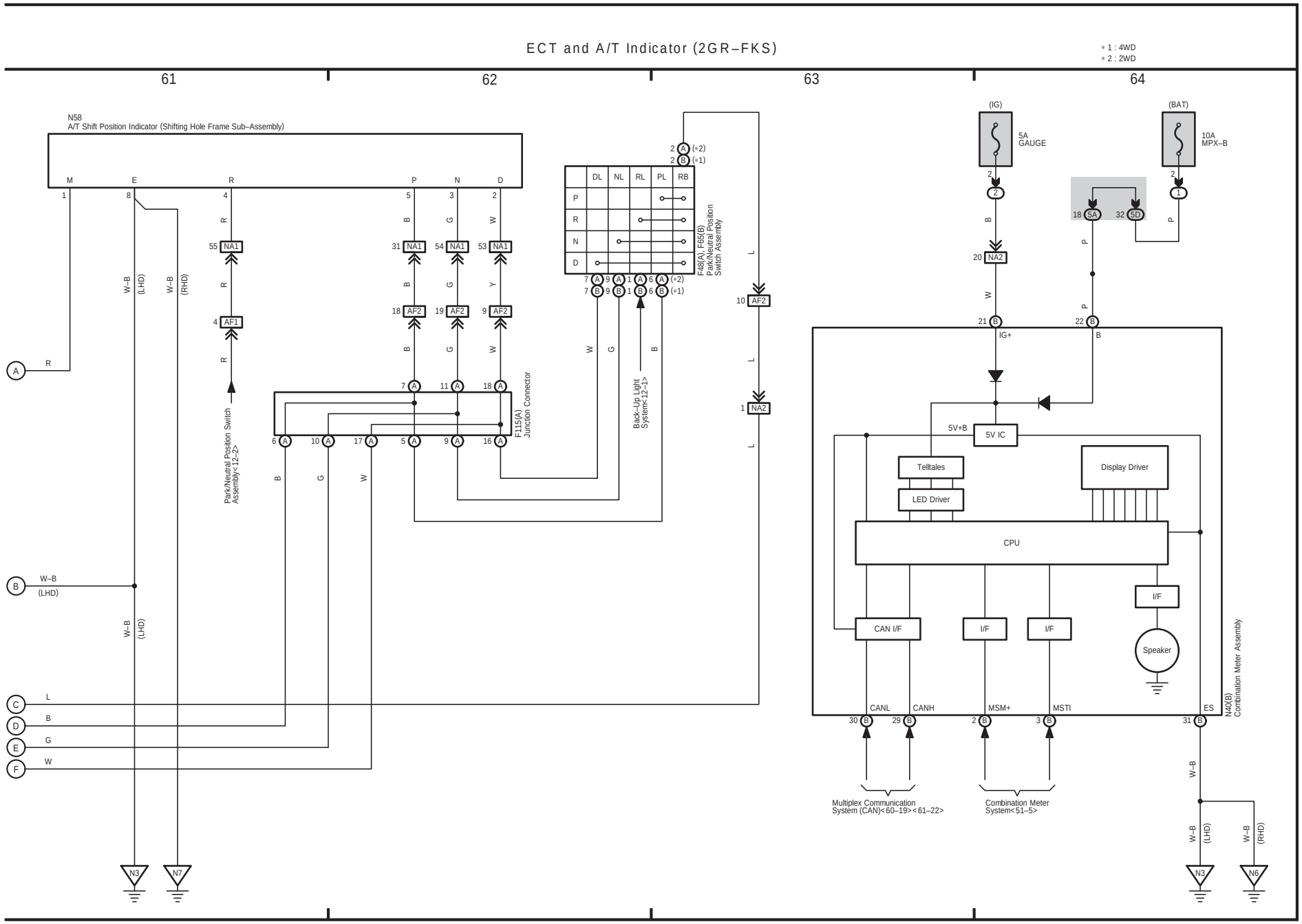
ECT and A/T Indicator (2GR–FKS)
* 1 : 4WD
* 2 : 2WD
61
62
63
64
N58
A/T Shift Position Indicator (Shifting Hole Frame Sub–Assembly)
M
E
R
P
N
D
NA1
AF1
AF2
NA2
Park/Neutral Position Switch Assembly<12–2>
F115(A) Junction Connector
F48(A), F65(B) Park/Neutral Position Switch Assembly
DL
NL
RL
PL
RB
Back–Up Light System<12–1>
(IG)
5A GAUGE
(BAT)
10A MPX–B
IG+
5V+B
5V IC
Telltales
LED Driver
Display Driver
CPU
I/F
Speaker
CAN I/F
CANL
CANH
MSM+
MSTI
ES
N40(B) Combination Meter Assembly
Multiplex Communication System (CAN)<60–19><61–22>
Combination Meter System<51–5>
W–B (LHD)
W–B (RHD)
N3
N7
N6