(Cont. next page)

Engine Immobiliser System (LHD), Entry & Start System (LHD), Starting (LHD), Steering Lock (LHD) and Wireless Door Lock Control (LHD) (From Oct. 2015 Production)

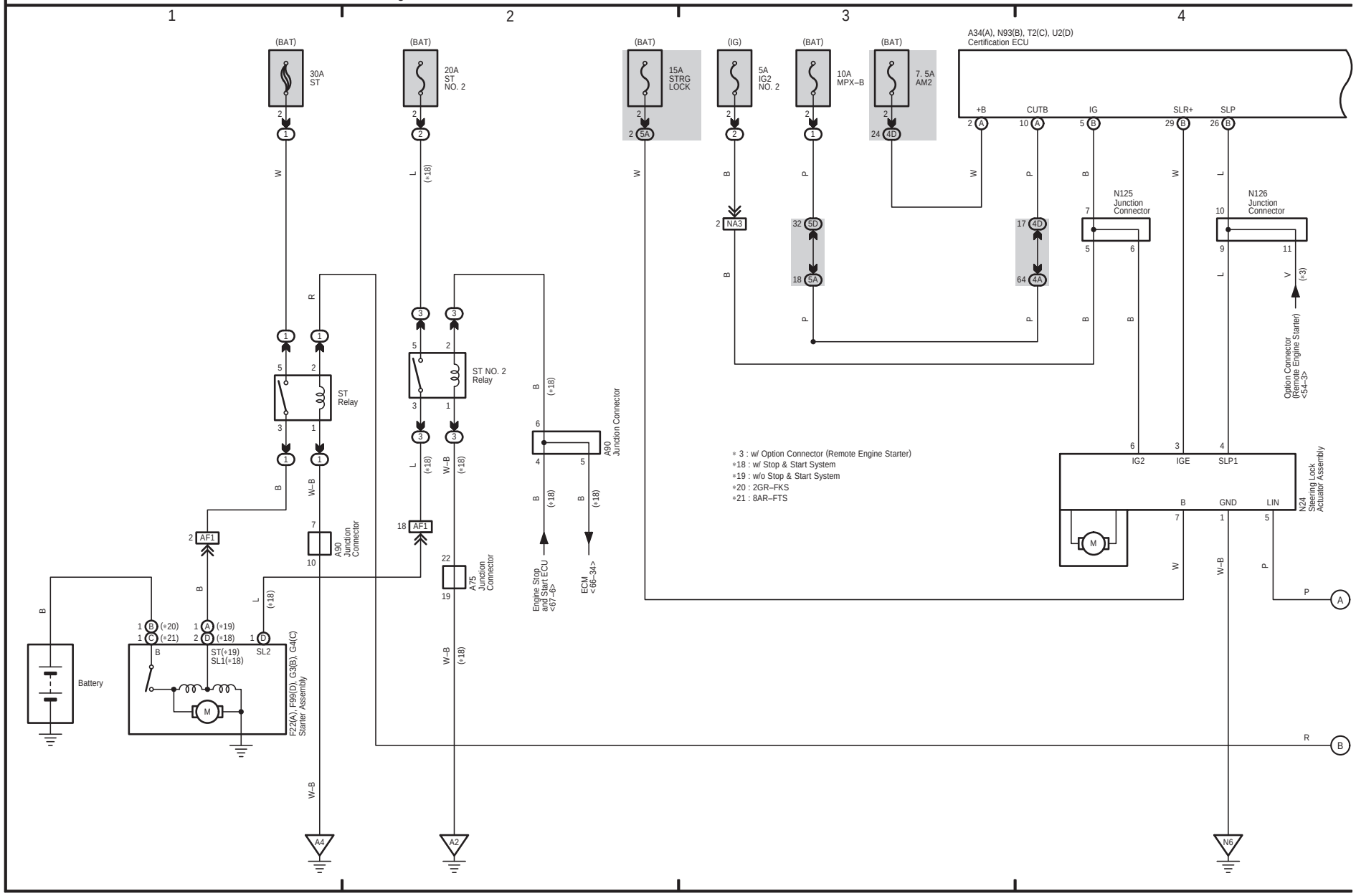

(Cont. next page)

Engine Immobiliser System (LHD), Entry & Start System (LHD), Starting (LHD), Steering Lock (LHD) and Wireless Door Lock Control (LHD) (From Oct. 2015 Production)

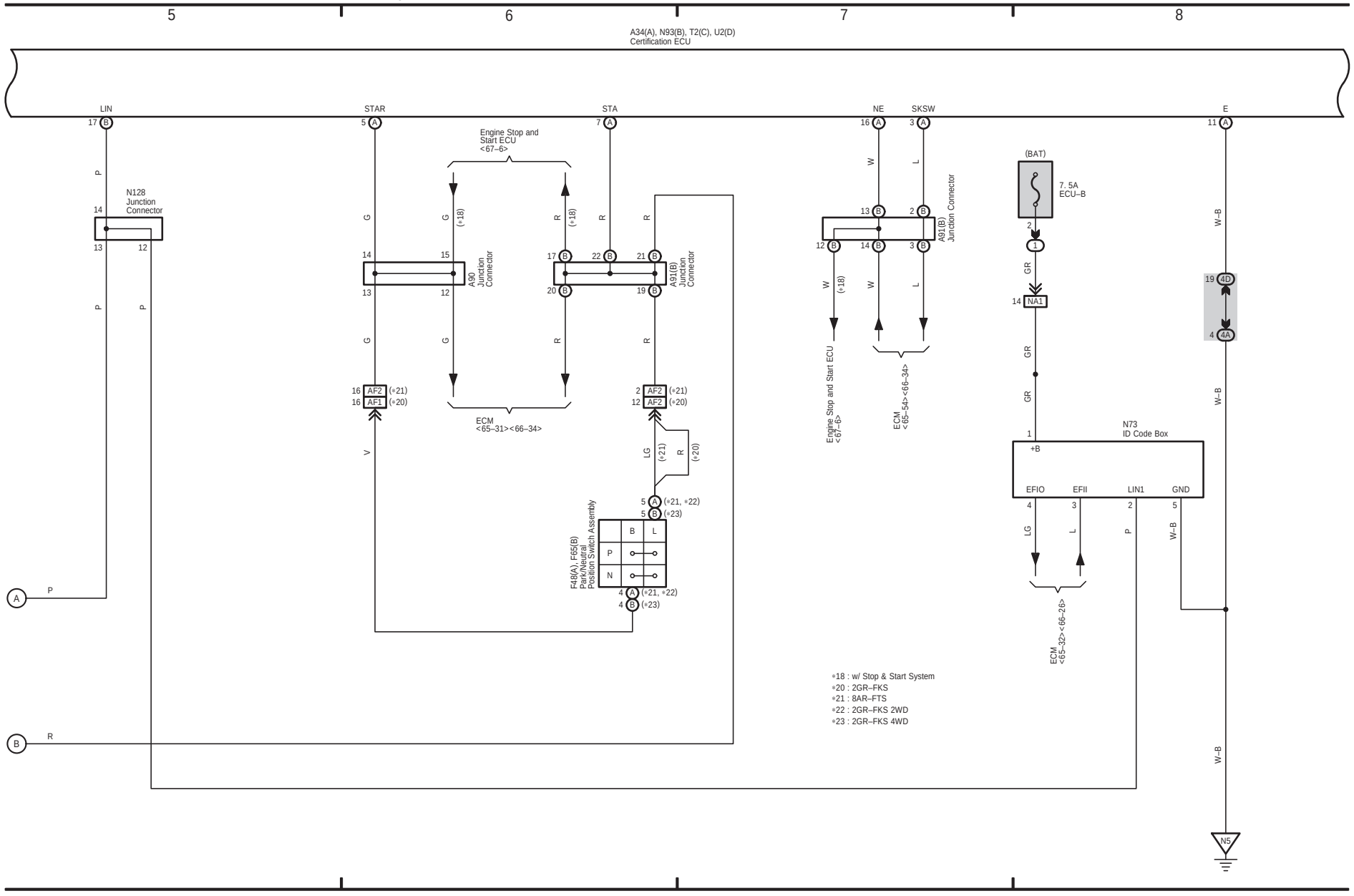

77 GS 350 / GS 250 / GS 200t / GS 300 (Cont' d)

(Cont. next page)

Engine Immobiliser System (LHD), Entry & Start System (LHD), Starting (LHD), Steering Lock (LHD) and Wireless Door Lock Control (LHD) (From Oct. 2015 Production)

*13 : w/ Entry Function
*18 : w/ Stop & Start System
*19 : w/o Stop & Start System

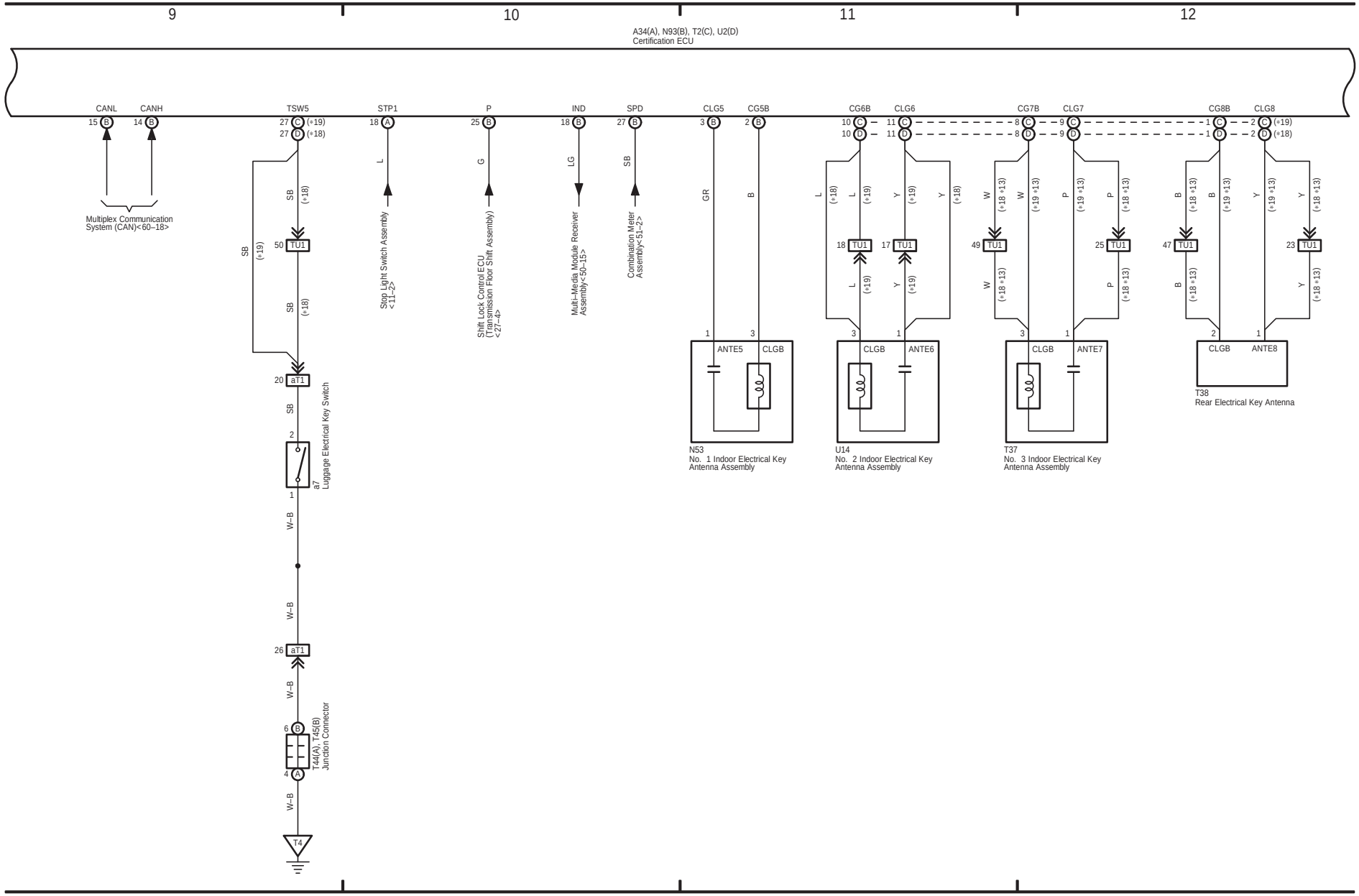

(Cont. next page)

Engine Immobiliser System (LHD), Entry & Start System (LHD), Starting (LHD), Steering Lock (LHD) and Wireless Door Lock Control (LHD) (From Oct. 2015 Production)

*13 : w/ Entry Function
*18 : w/ Stop & Start System
*19 : w/o Stop & Start System

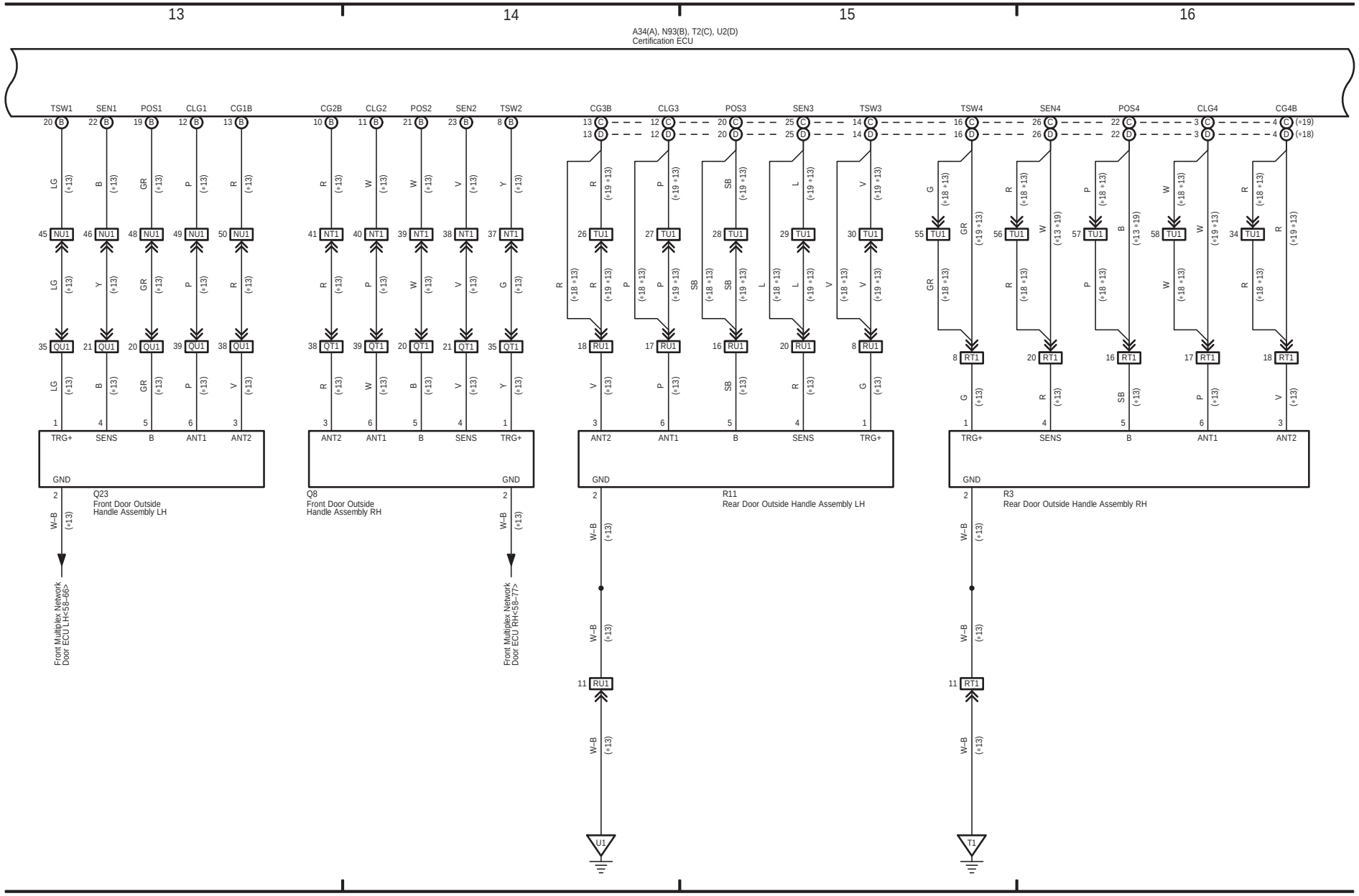

77 GS 350 / GS 250 / GS 200t / GS 300 (Cont' d)

(Cont. next page)

Engine Immobiliser System (LHD), Entry & Start System (LHD), Starting (LHD), Steering Lock (LHD) and Wireless Door Lock Control (LHD) (From Oct. 2015 Production)

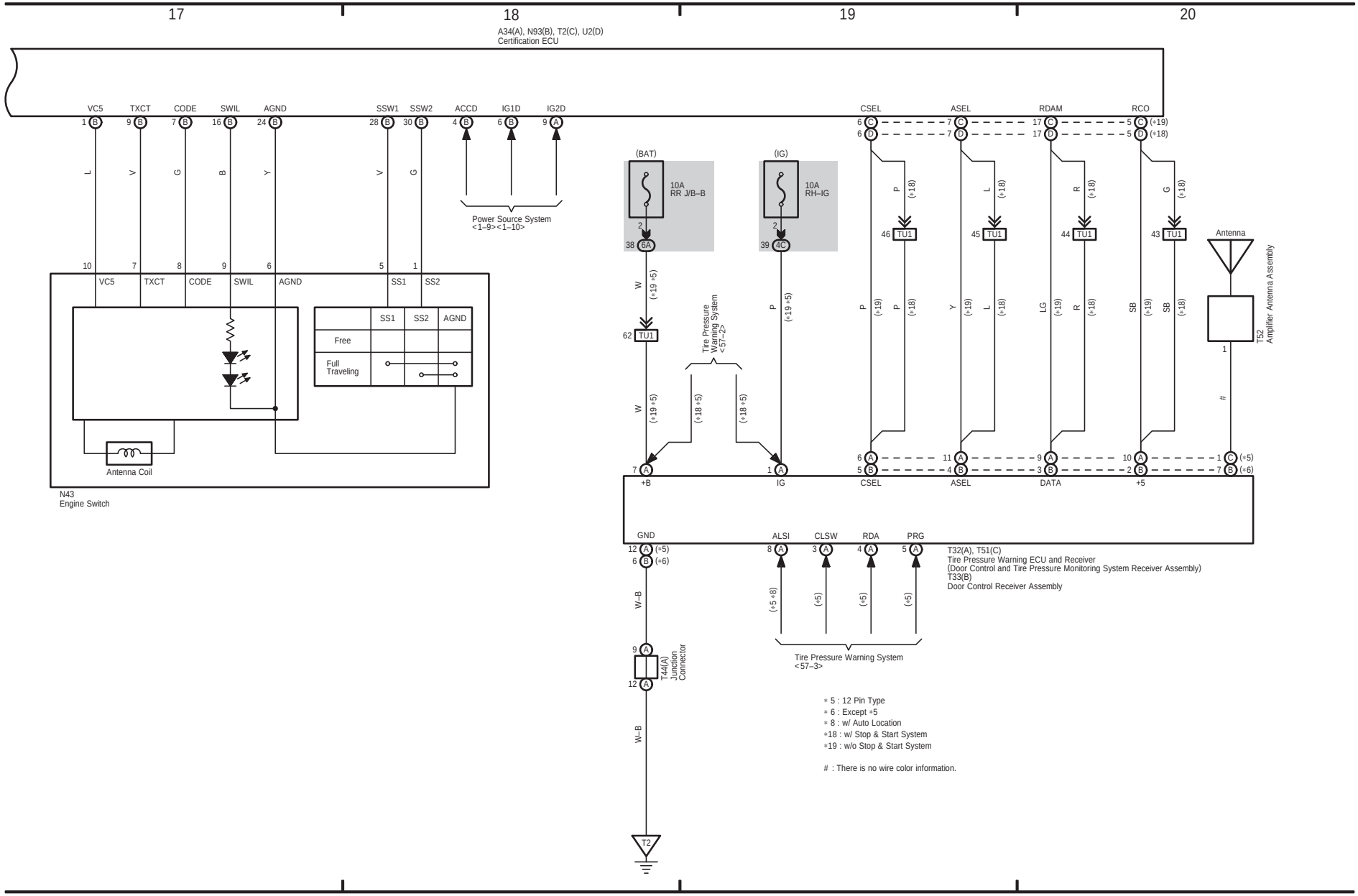

Engine Immobiliser System (LHD), Entry & Start System (LHD), Starting (LHD), Steering Lock (LHD) and Wireless Door Lock Control (LHD) (From Oct. 2015 Production)

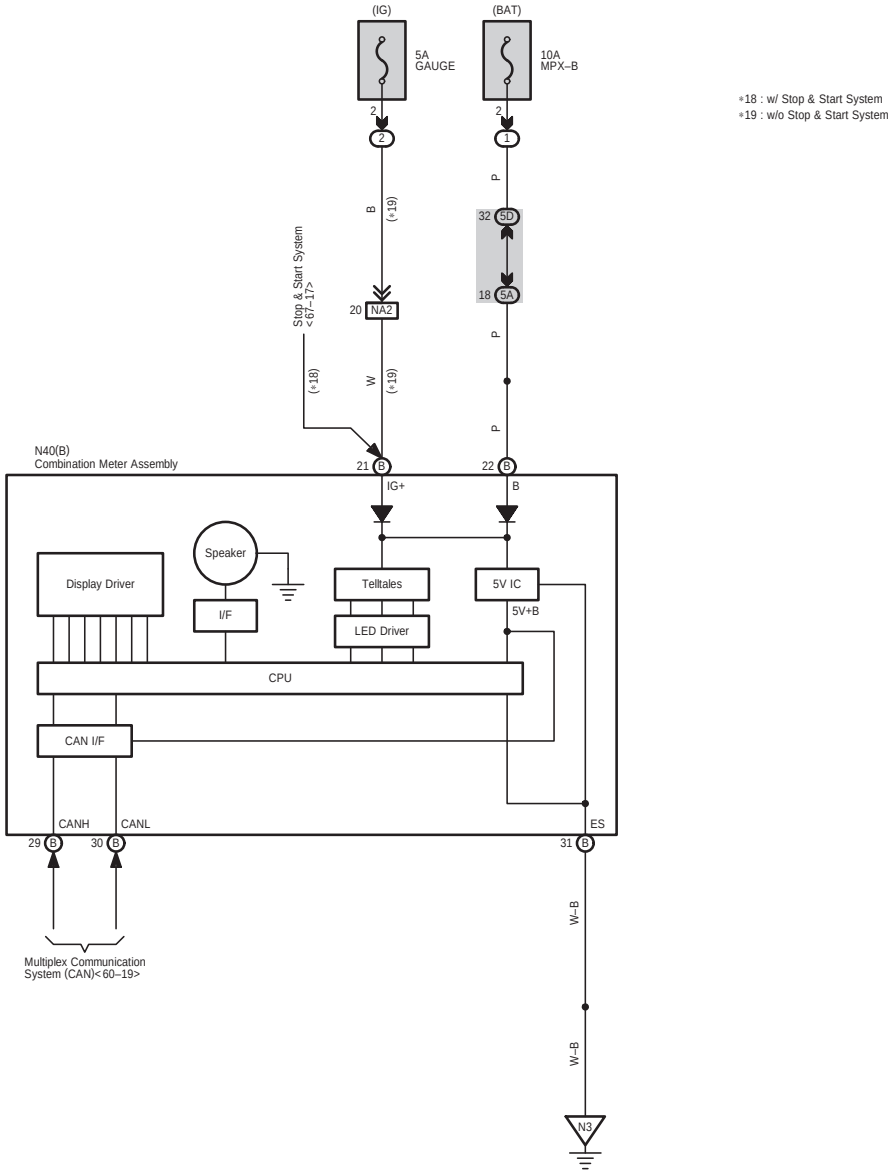

*18 : w/ Stop & Start System
*19 : w/o Stop & Start System