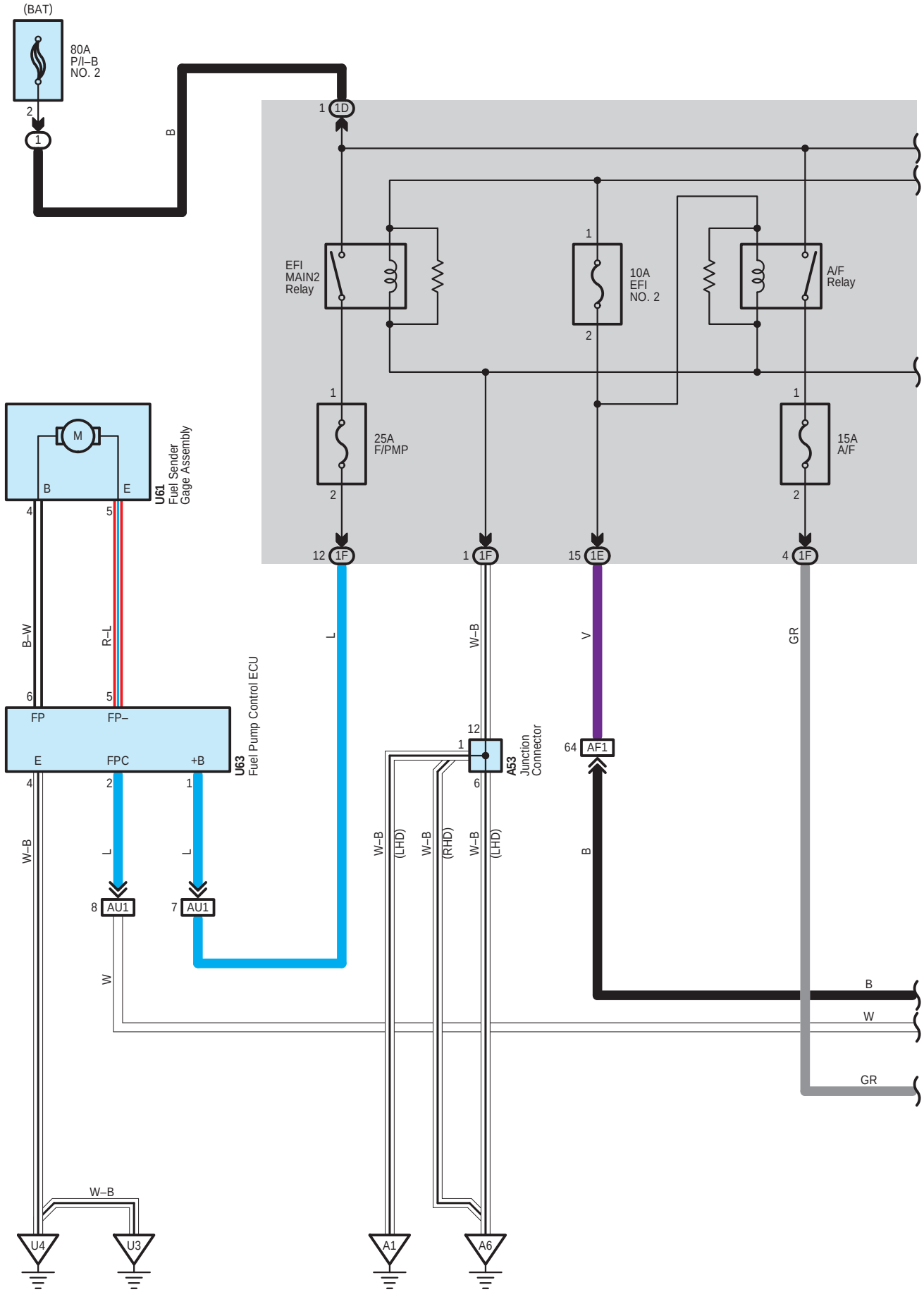
(BAT)
80A
P/I–B
NO. 2
2
1
B
1 1D
EFI
MAIN2
Relay
1
10A
EFI
NO. 2
2
A/F
Relay
1
25A
F/PMP
2
1
15A
A/F
2
12 1F
1 1F
15 1E
4 1F
M
B
E
U61
Fuel Sender
Gage Assembly
4
5
B–W
R–L
L
W–B
V
GR
6
5
FP
FP–
E
FPC
+B
U63
Fuel Pump Control ECU
4
2
1
12
1
6
A53
Junction
Connector
64 AF1
W–B
L
L
8 AU1
7 AU1
W
W–B
(LHD)
W–B
(RHD)
W–B
(LHD)
B
B
W
GR
W–B
U4
U3
A1
A6

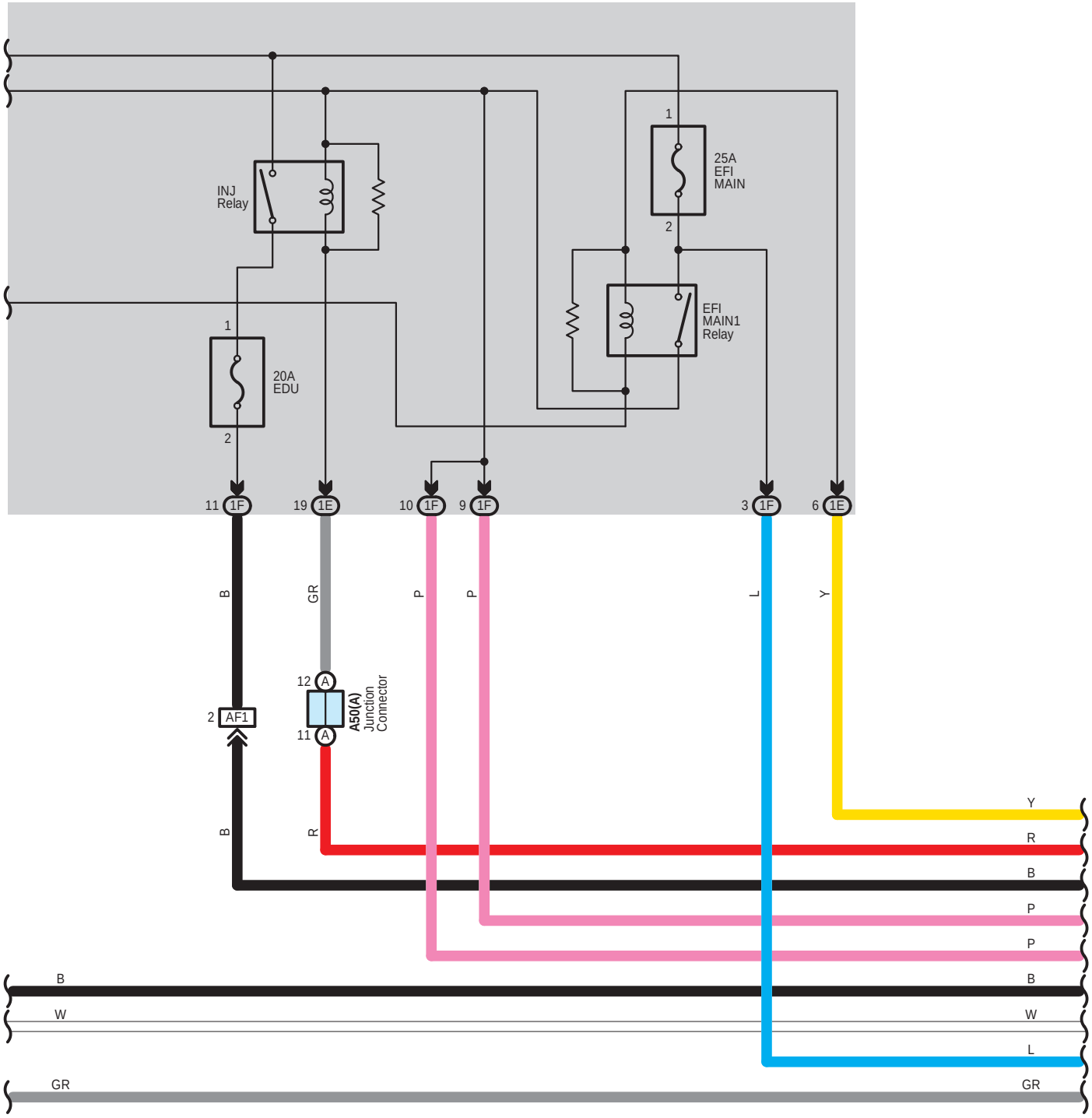
INJ
Relay
1
25A
EFI
MAIN
2
EFI
MAIN1
Relay
1
20A
EDU
2
11 1F
19 1E
10 1F
9 1F
3 1F
6 1E
B
GR
P
P
L
Y
12 A
2 AF1
11 A
A50(A)
Junction
Connector
B
R
Y
R
B
P
P
B
B
W
W
L
GR
GR

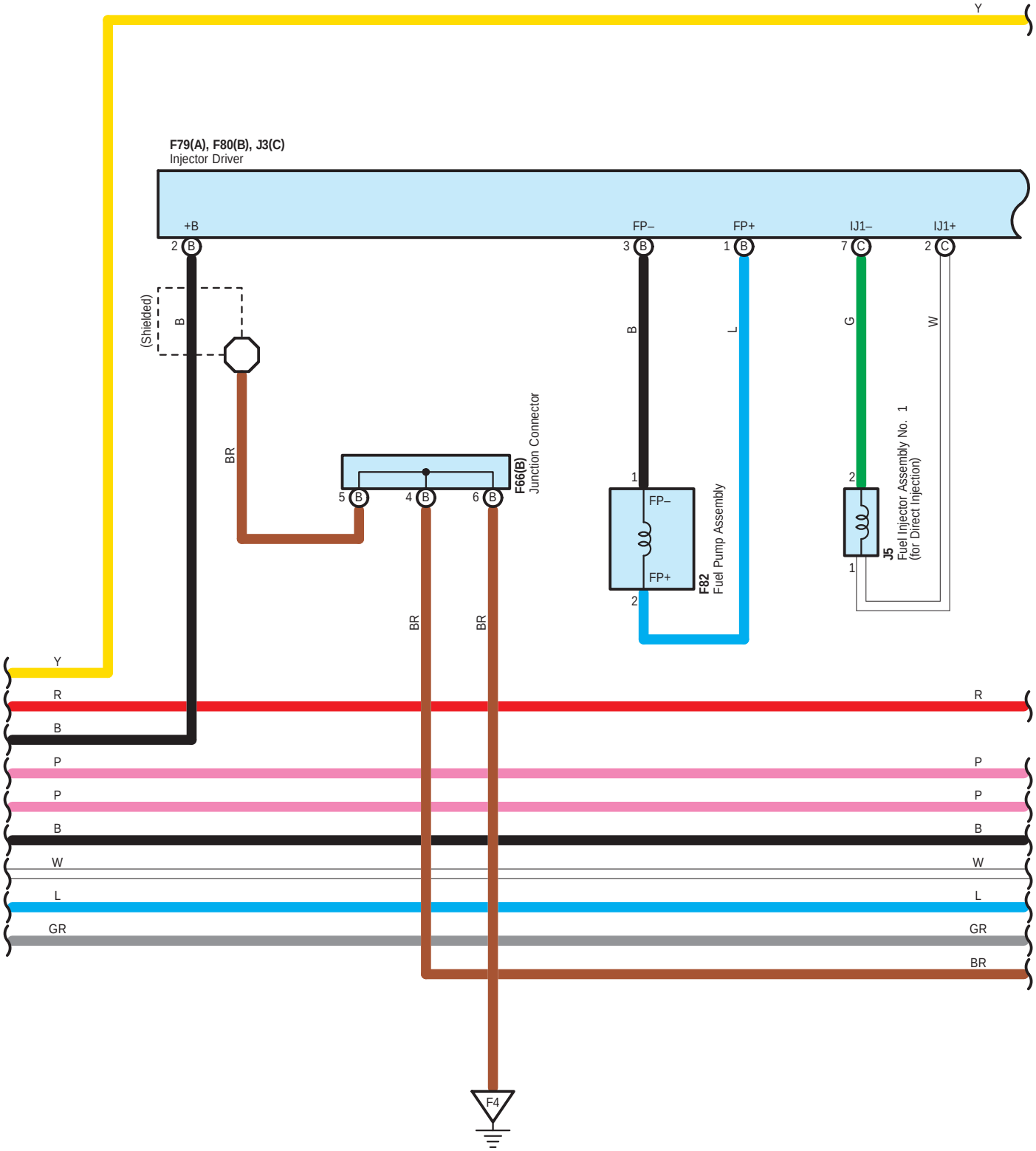
F79(A), F80(B), J3(C)
Injector Driver
+B
FP–
FP+
IJ1–
IJ1+
2 B
3 B
1 B
7 C
2 C
(Shielded)
B
BR
B
L
G
W
F66(B)
Junction Connector
5 B
4 B
6 B
1
FP–
FP+
2
F82
Fuel Pump Assembly
2
1
J5
Fuel Injector Assembly No. 1
(for Direct Injection)
BR
BR
Y
R
B
P
P
B
W
L
GR
Y
R
P
P
B
W
L
GR
BR
F4

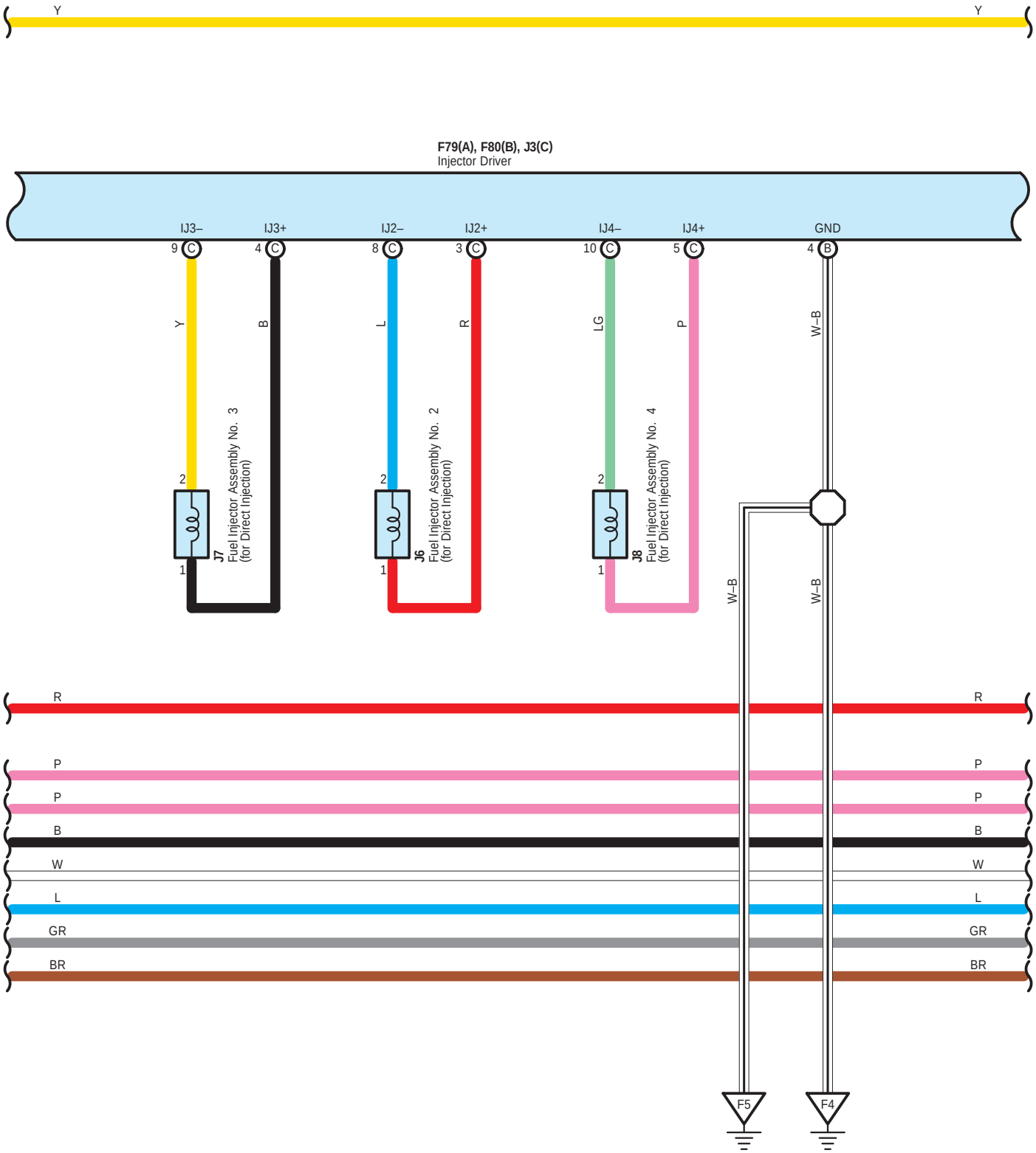
Y
Y
F79(A), F80(B), J3(C)
Injector Driver
IJ3–
IJ3+
IJ2–
IJ2+
IJ4–
IJ4+
GND
9 C
4 C
8 C
3 C
10 C
5 C
4 B
Y
B
L
R
LG
P
W–B
2
1
J7
Fuel Injector Assembly No. 3
(for Direct Injection)
J6
Fuel Injector Assembly No. 2
(for Direct Injection)
J8
Fuel Injector Assembly No. 4
(for Direct Injection)
W–B
W–B
R
R
P
P
P
P
B
B
W
W
L
L
GR
GR
BR
BR
F5
F4

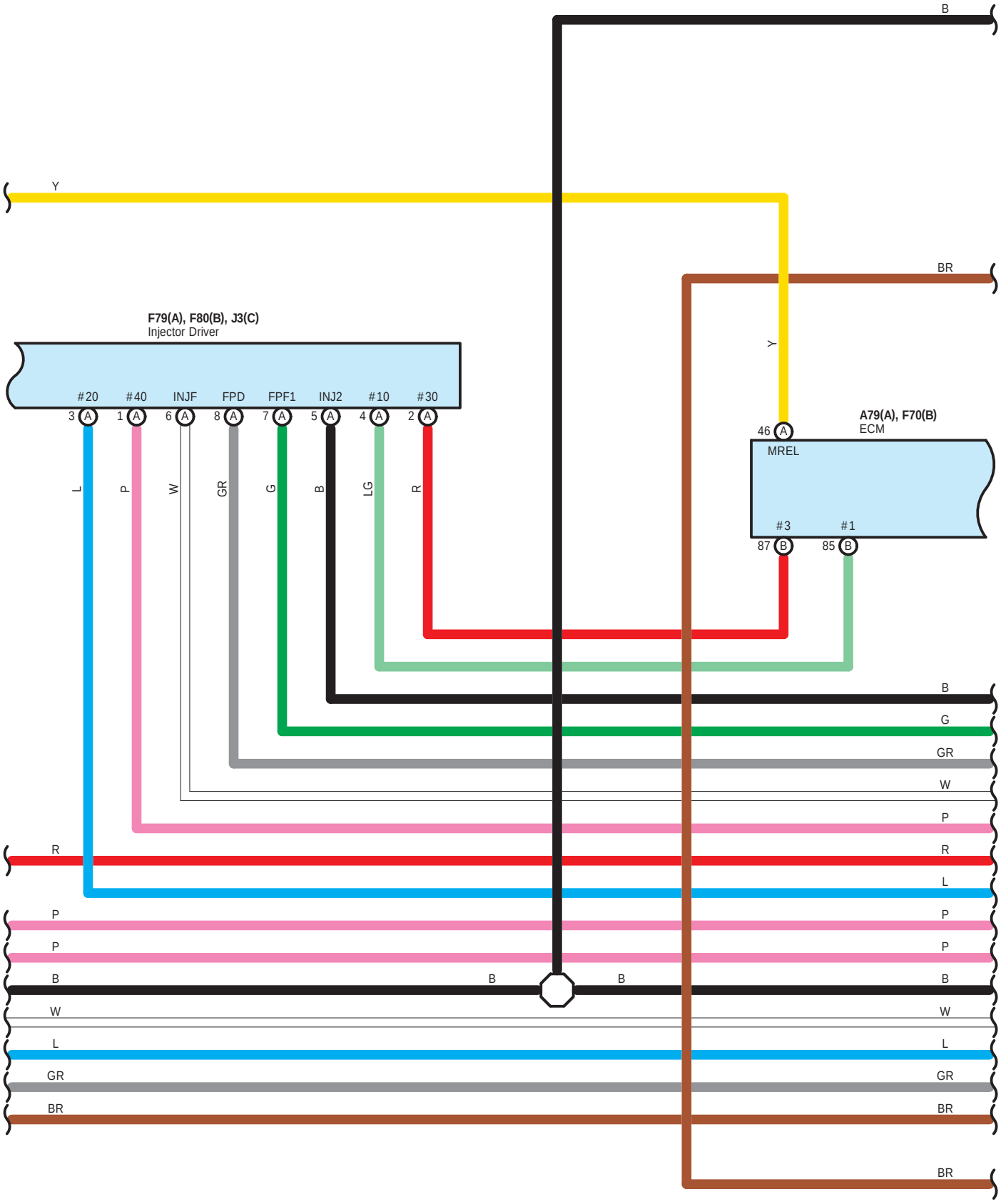
B
Y
BR
F79(A), F80(B), J3(C)
Injector Driver
#20
#40
INJF
FPD
FPF1
INJ2
#10
#30
3 A
1 A
6 A
8 A
7 A
5 A
4 A
2 A
L
P
W
GR
G
B
LG
R
Y
A79(A), F70(B)
ECM
46 A
MREL
#3
#1
87 B
85 B
B
G
GR
W
P
R
R
L
P
P
P
P
B
B
B
B
W
W
L
L
GR
GR
BR
BR
BR

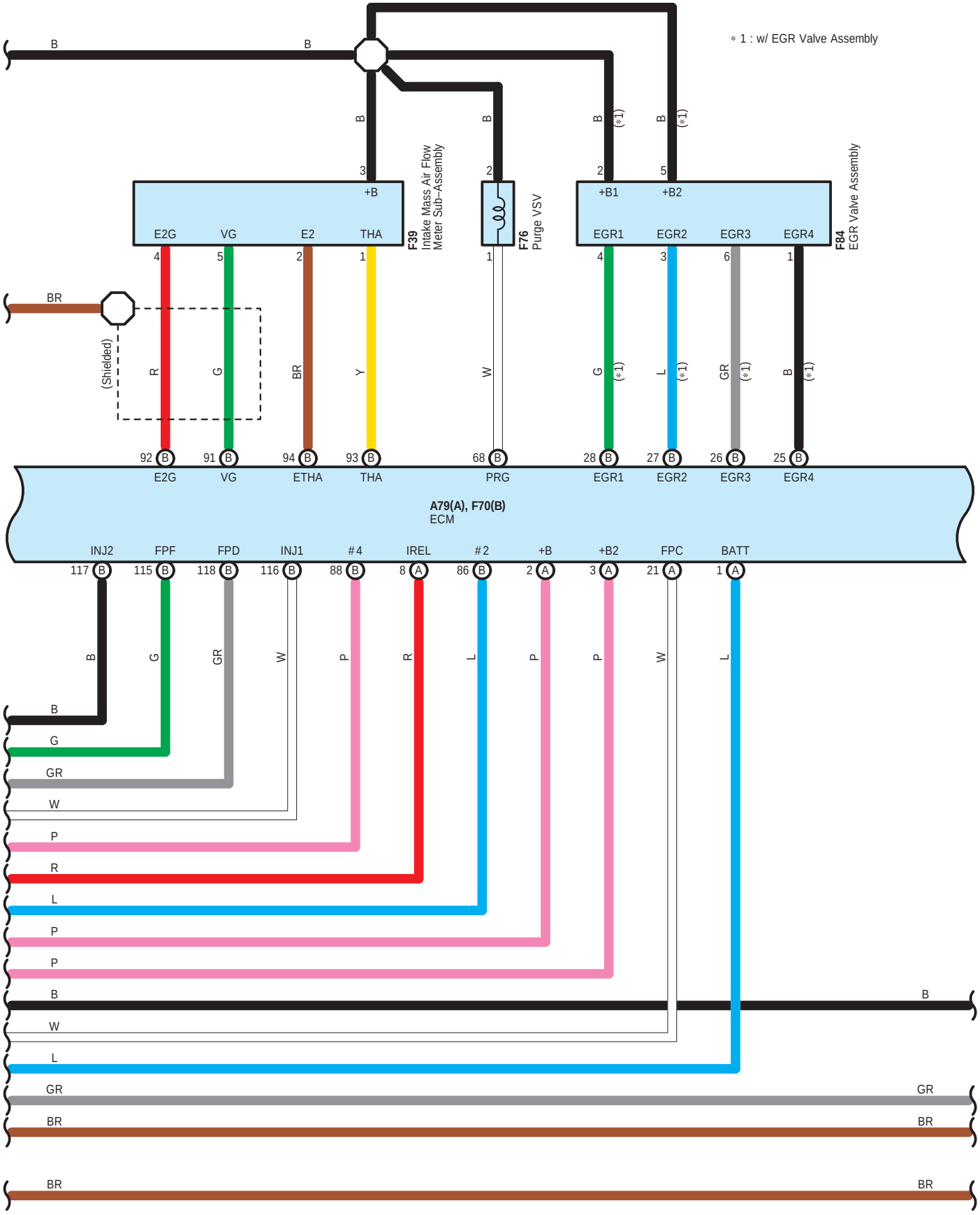
∗1 : w/ EGR Valve Assembly
F39
Intake Mass Air Flow Meter Sub-Assembly
F76
Purge VSV
F84
EGR Valve Assembly
+B
E2G
VG
E2
THA
+B1
+B2
EGR1
EGR2
EGR3
EGR4
(Shielded)
A79(A), F70(B)
ECM
INJ2
FPF
FPD
INJ1
#4
IREL
#2
+B
+B2
FPC
BATT
ETHA
PRG

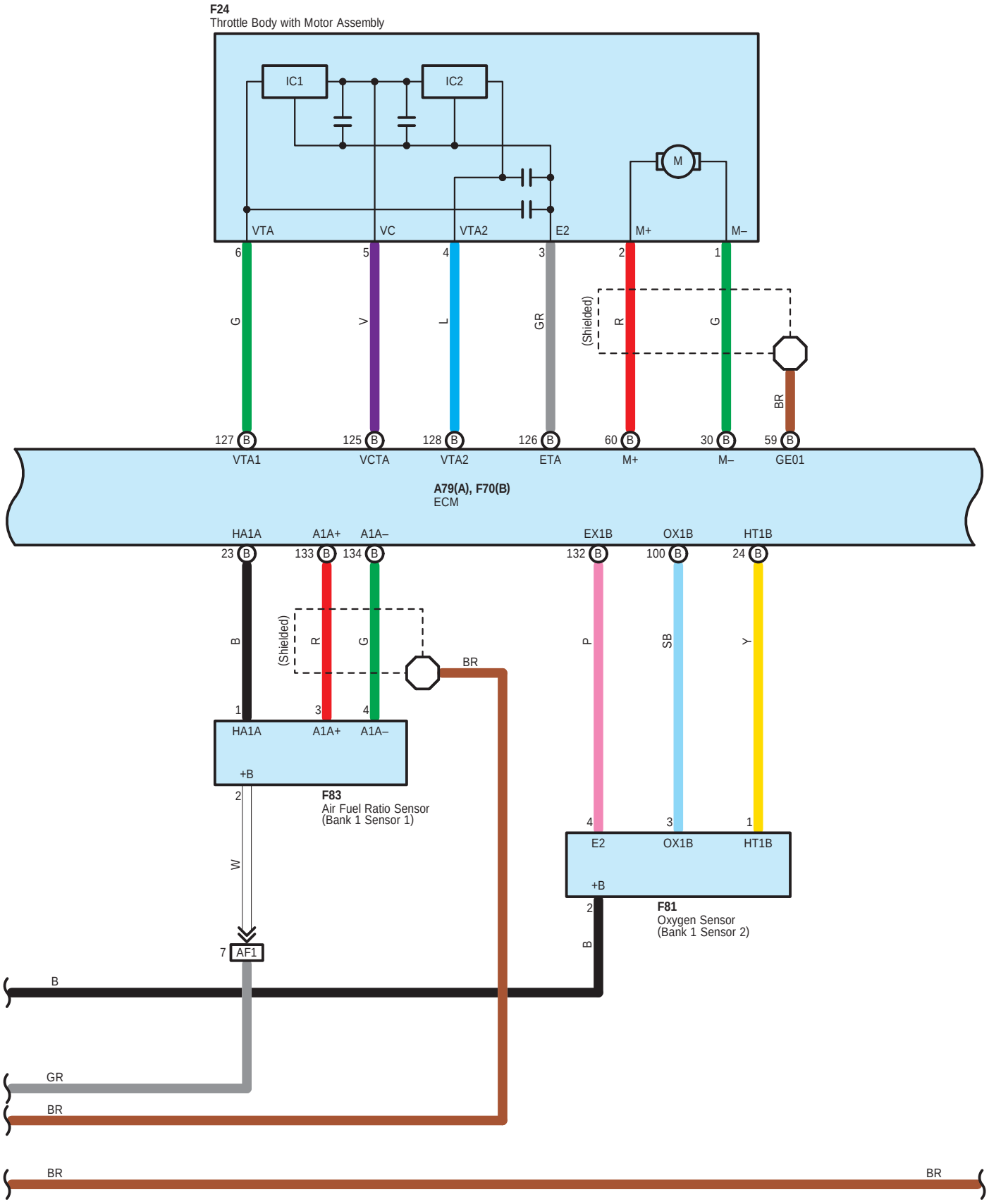
F24
Throttle Body with Motor Assembly
IC1
IC2
M
VTA
VC
VTA2
E2
M+
M–
6
5
4
3
2
1
G
V
L
GR
(Shielded)
R
G
BR
127 B
125 B
128 B
126 B
60 B
30 B
59 B
VTA1
VCTA
VTA2
ETA
M+
M–
GE01
A79(A), F70(B)
ECM
HA1A
A1A+
A1A–
EX1B
OX1B
HT1B
23 B
133 B
134 B
132 B
100 B
24 B
B
(Shielded)
R
G
BR
P
SB
Y
1
3
4
HA1A
A1A+
A1A–
+B
2
F83
Air Fuel Ratio Sensor
(Bank 1 Sensor 1)
4
3
1
E2
OX1B
HT1B
+B
2
F81
Oxygen Sensor
(Bank 1 Sensor 2)
W
B
7 AF1
B
GR
BR
BR
BR

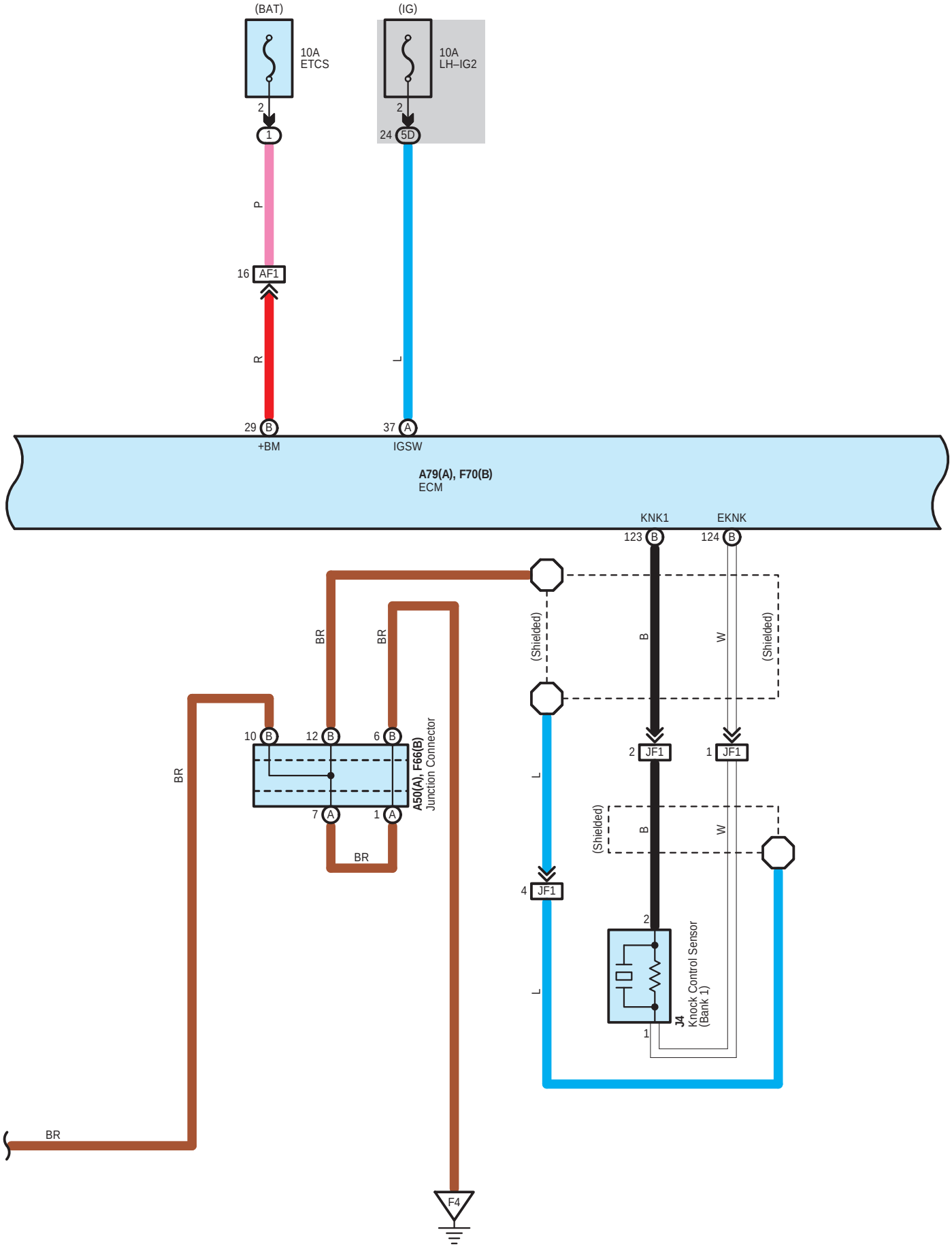
(BAT)
10A
ETCS
(IG)
10A
LH–IG2
2
1
24
5D
P
16
AF1
R
L
29
B
+BM
37
A
IGSW
A79(A), F70(B)
ECM
KNK1
EKNK
123
124
(Shielded)
B
W
BR
10
12
6
7
1
A50(A), F66(B)
Junction Connector
2
JF1
4
J4
Knock Control Sensor
(Bank 1)
F4

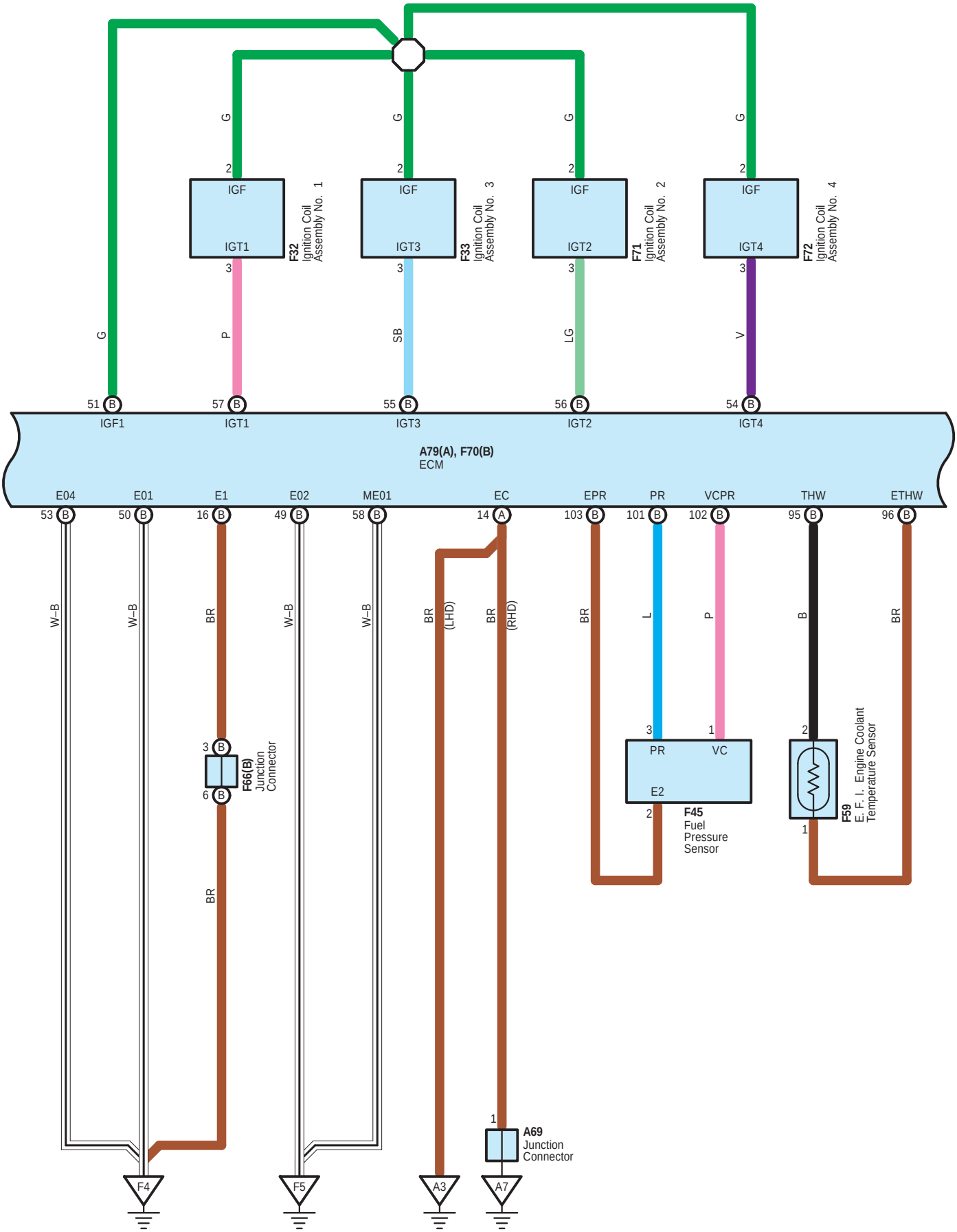
G
2
IGF
IGT1
3
F32
Ignition Coil
Assembly No. 1
IGT3
F33
Ignition Coil
Assembly No. 3
IGT2
F71
Ignition Coil
Assembly No. 2
IGT4
F72
Ignition Coil
Assembly No. 4
P
SB
LG
V
51 B IGF1
57 B IGT1
55 B IGT3
56 B IGT2
54 B IGT4
A79(A), F70(B)
ECM
E04 53 B
E01 50 B
E1 16 B
E02 49 B
ME01 58 B
EC 14 A
EPR 103 B
PR 101 B
VCPR 102 B
THW 95 B
ETHW 96 B
W–B
BR
BR (LHD)
BR (RHD)
L
B
3 B
6 B
F66(B)
Junction
Connector
PR
VC
E2
F45
Fuel
Pressure
Sensor
F59
E. F. I. Engine Coolant
Temperature Sensor
A69
Junction
Connector
F4
F5
A3
A7

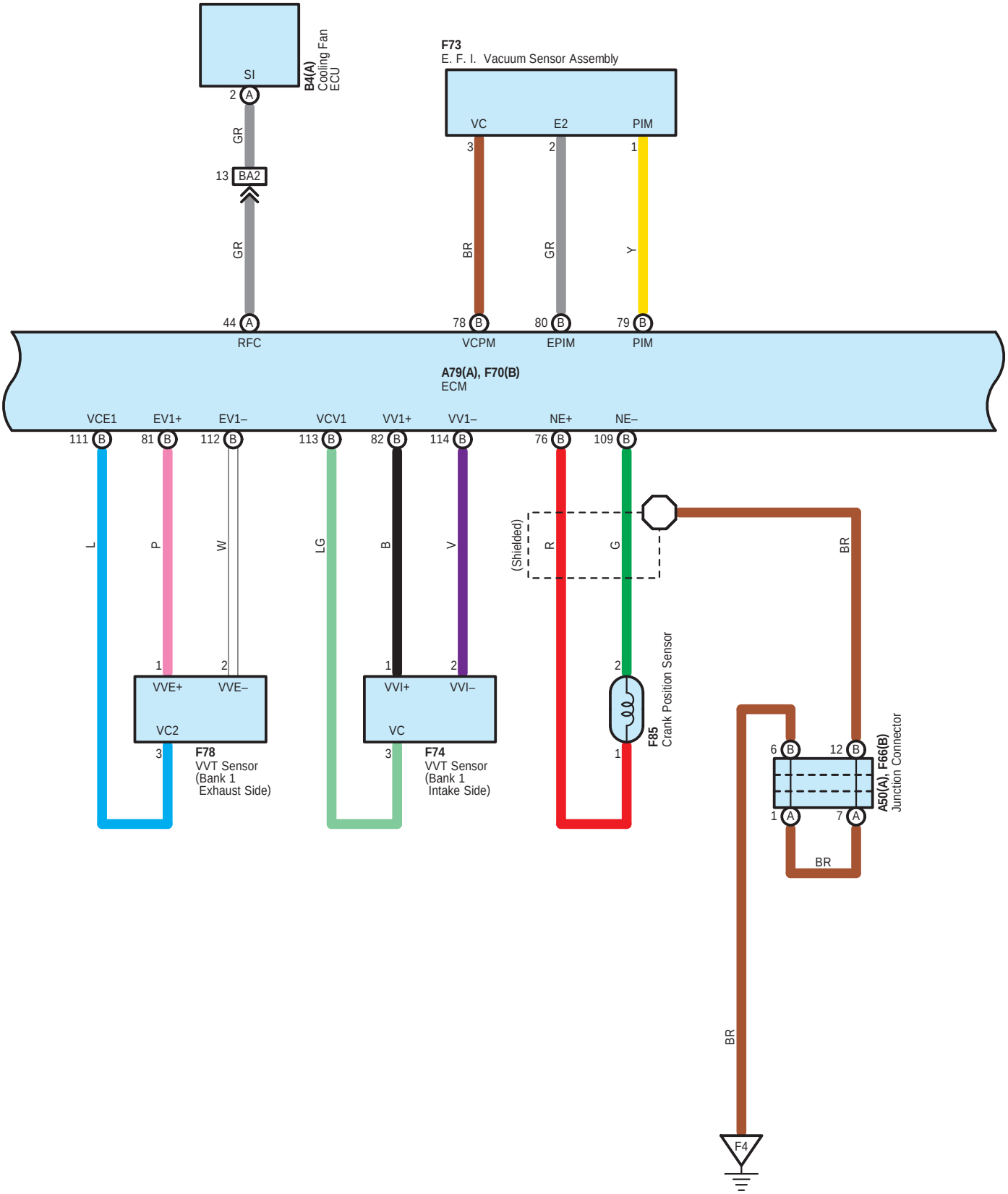
B4(A)
Cooling Fan
ECU
SI
2 A
GR
13 BA2
GR
44 A
RFC
F73
E. F. I. Vacuum Sensor Assembly
VC
E2
PIM
3
2
1
BR
GR
Y
78 B
80 B
79 B
VCPM
EPIM
PIM
A79(A), F70(B)
ECM
VCE1
EV1+
EV1–
VCV1
VV1+
VV1–
NE+
NE–
111 B
81 B
112 B
113 B
82 B
114 B
76 B
109 B
L
P
W
LG
B
V
(Shielded)
R
G
BR
1
2
VVE+
VVE–
VC2
3
F78
VVT Sensor
(Bank 1
Exhaust Side)
1
2
VVI+
VVI–
VC
3
F74
VVT Sensor
(Bank 1
Intake Side)
2
1
F85
Crank Position Sensor
6 B
12 B
1 A
7 A
A50(A), F66(B)
Junction Connector
BR
BR
F4

＊2 : w/ Adaptive Variable Suspension
＊3 : w/o Adaptive Variable Suspension

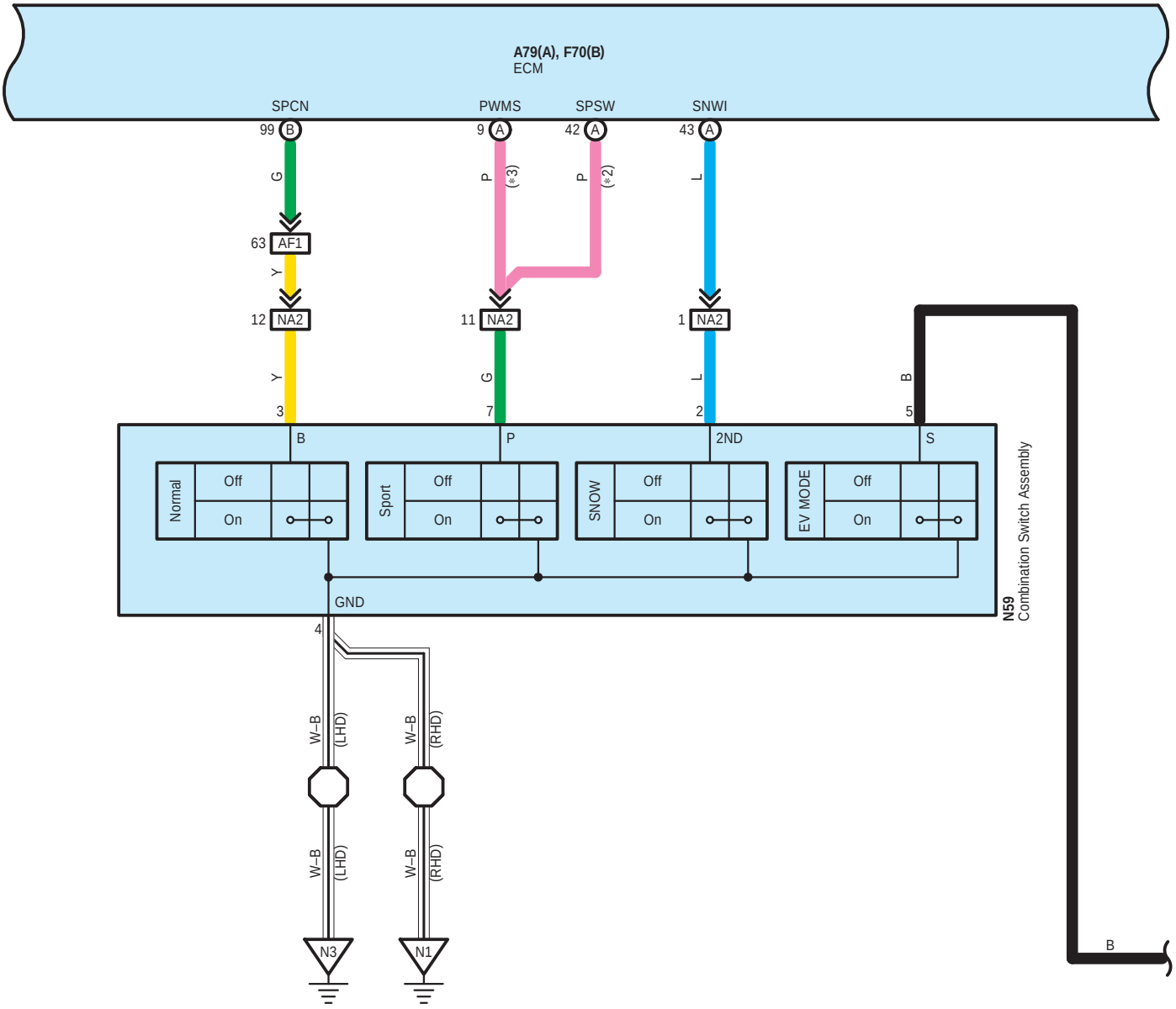

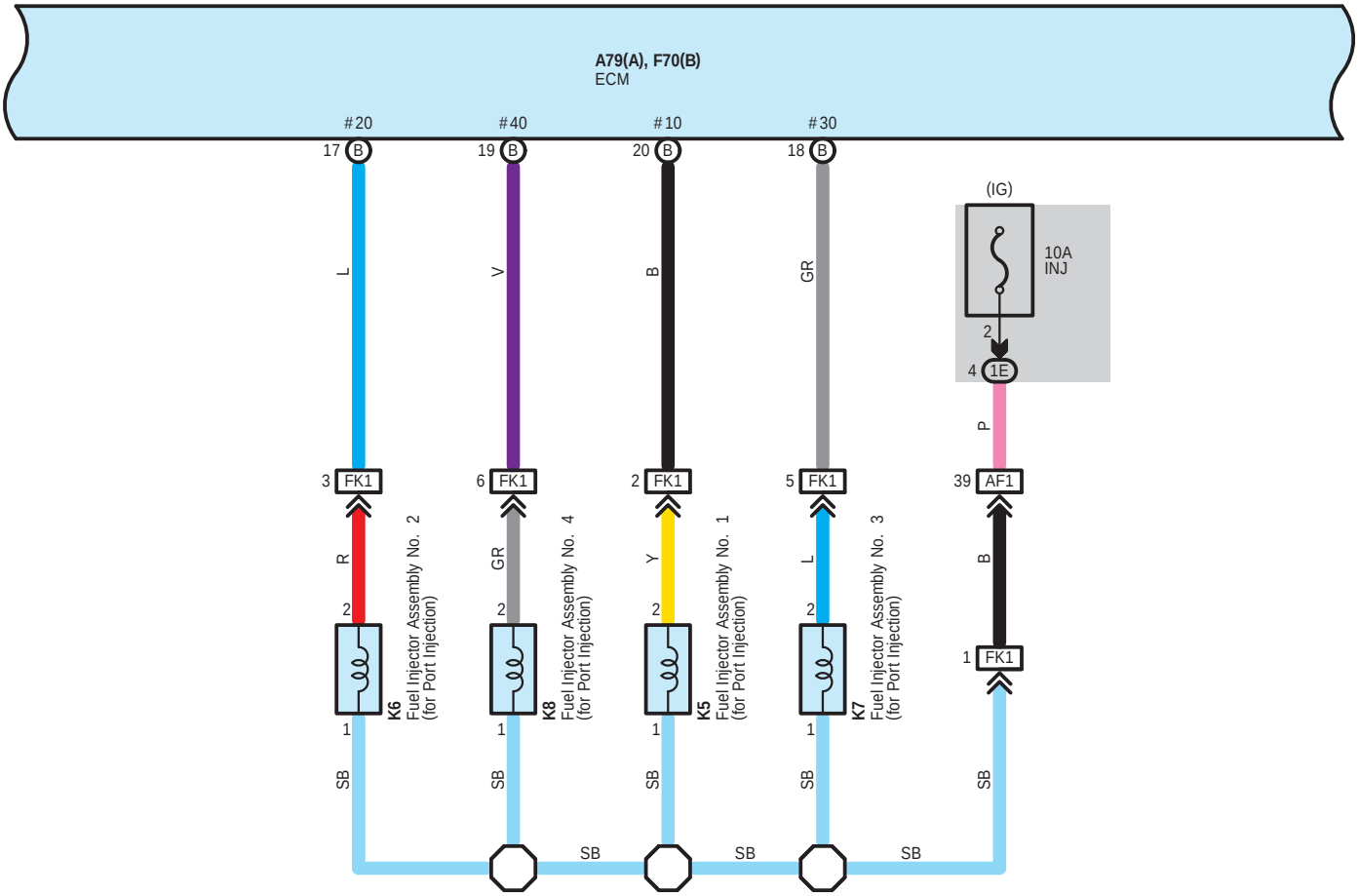
A79(A), F70(B)
ECM
#20
#40
#10
#30
17 B
19 B
20 B
18 B
L
V
B
GR
(IG)
10A
INJ
2
4 1E
P
3 FK1
6 FK1
2 FK1
5 FK1
39 AF1
R
GR
Y
L
B
2
1 FK1
K6
Fuel Injector Assembly No. 2
(for Port Injection)
K8
Fuel Injector Assembly No. 4
(for Port Injection)
K5
Fuel Injector Assembly No. 1
(for Port Injection)
K7
Fuel Injector Assembly No. 3
(for Port Injection)
1
SB
SB
SB
SB
SB
SB
SB

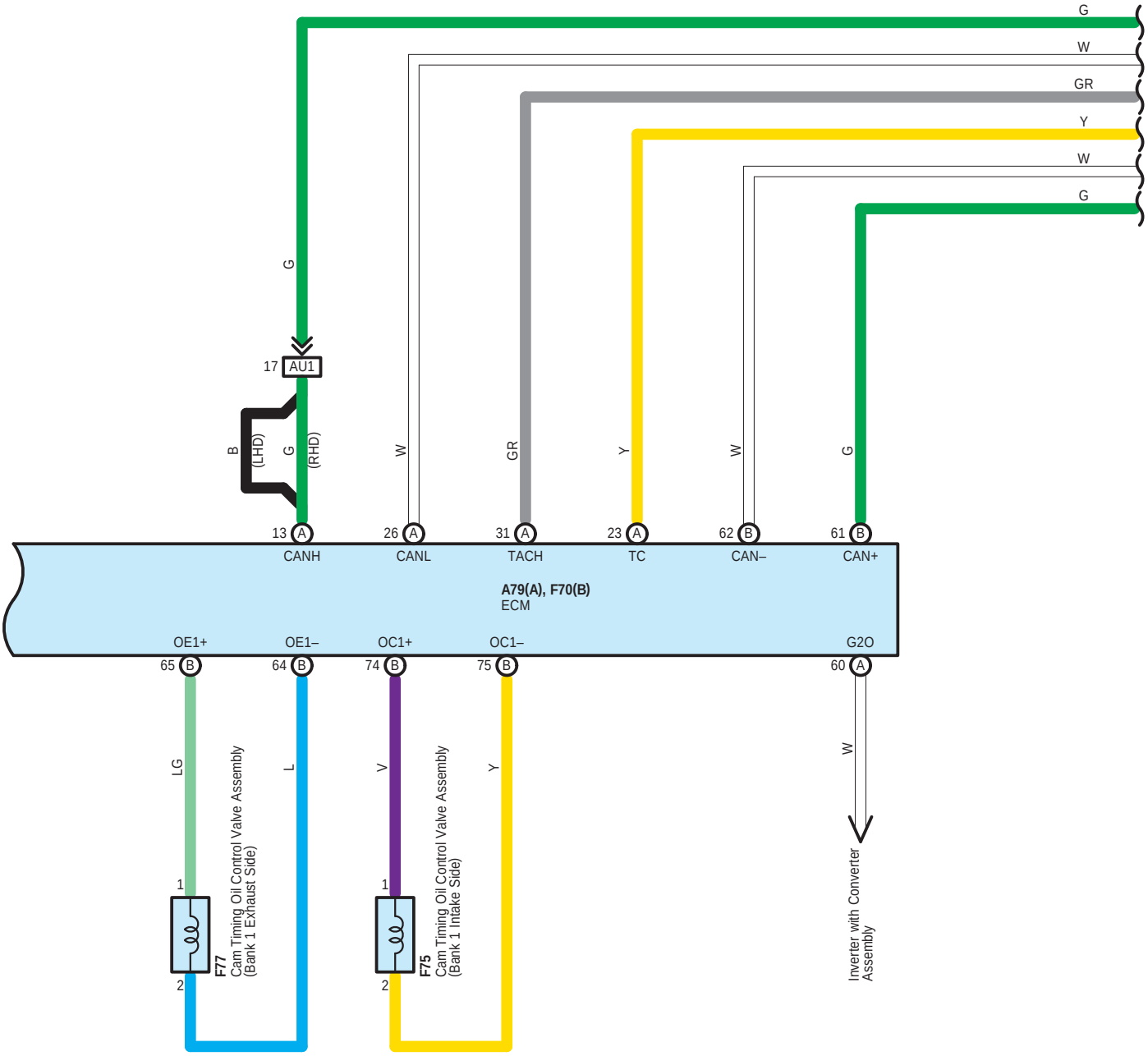
G
W
GR
Y
W
G
G
17 AU1
B (LHD)
G (RHD)
W
GR
Y
W
G
13 A CANH
26 A CANL
31 A TACH
23 A TC
62 B CAN–
61 B CAN+
A79(A), F70(B)
ECM
OE1+
OE1–
OC1+
OC1–
G2O
65 B
64 B
74 B
75 B
60 A
LG
L
V
Y
W
1
2
F77
Cam Timing Oil Control Valve Assembly
(Bank 1 Exhaust Side)
1
2
F75
Cam Timing Oil Control Valve Assembly
(Bank 1 Intake Side)
Inverter with Converter
Assembly

B B

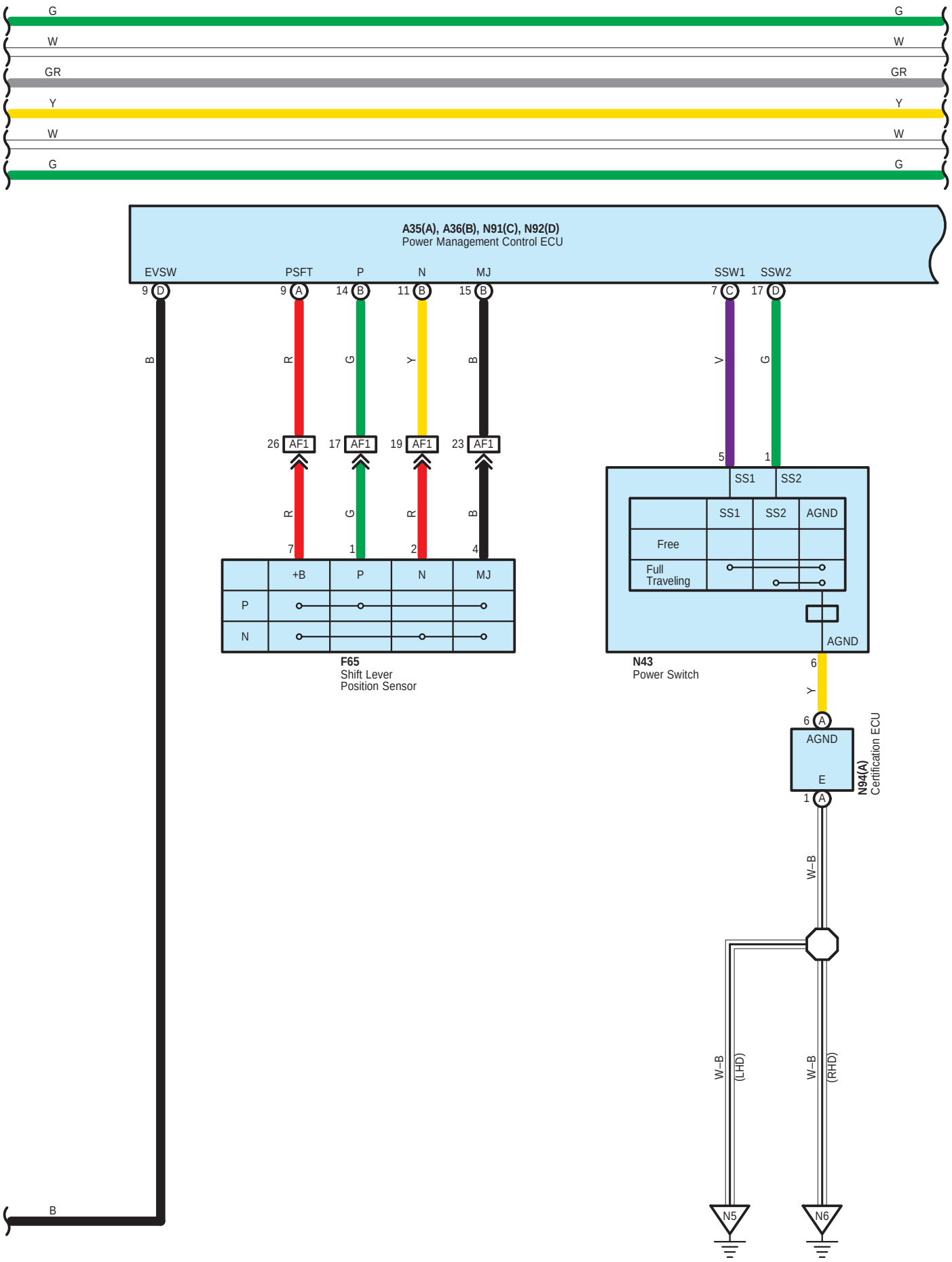
G
W
GR
Y
W
G
A35(A), A36(B), N91(C), N92(D)
Power Management Control ECU
EVSW
PSFT
P
N
MJ
SSW1
SSW2
9 D
9 A
14 B
11 B
15 B
7 C
17 D
B
R
G
Y
B
V
G
26 AF1
17 AF1
19 AF1
23 AF1
5
1
SS1
SS2
R
G
R
B
7
1
2
4
+B
P
N
MJ
P
N
F65
Shift Lever
Position Sensor
SS1
SS2
AGND
Free
Full
Traveling
AGND
N43
Power Switch
6
Y
6 A
AGND
E
1 A
N94(A)
Certification ECU
W–B
W–B
(LHD)
W–B
(RHD)
N5
N6
B

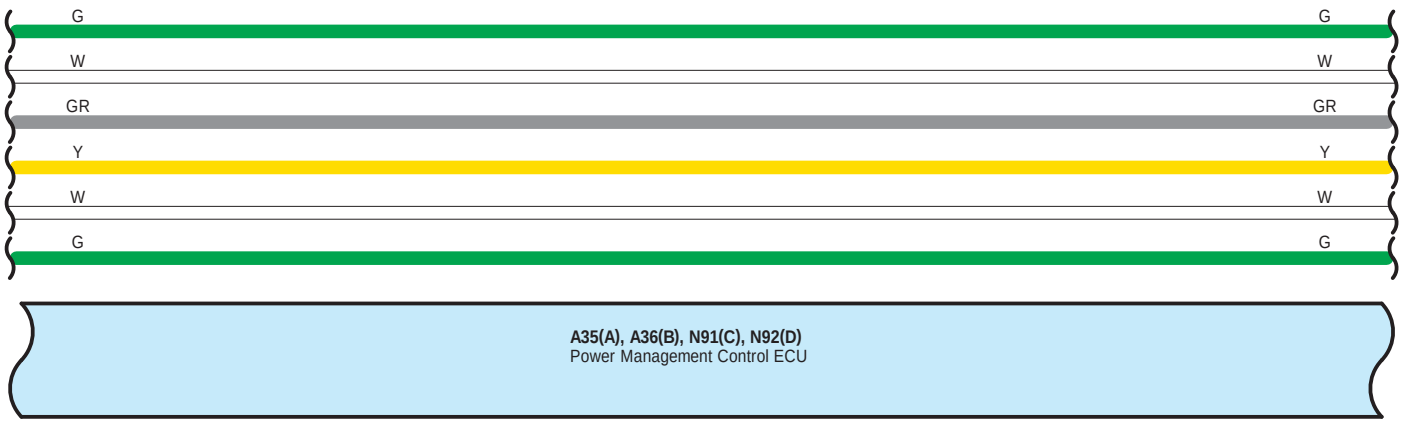
G
W
GR
Y
W
G
A35(A), A36(B), N91(C), N92(D)
Power Management Control ECU

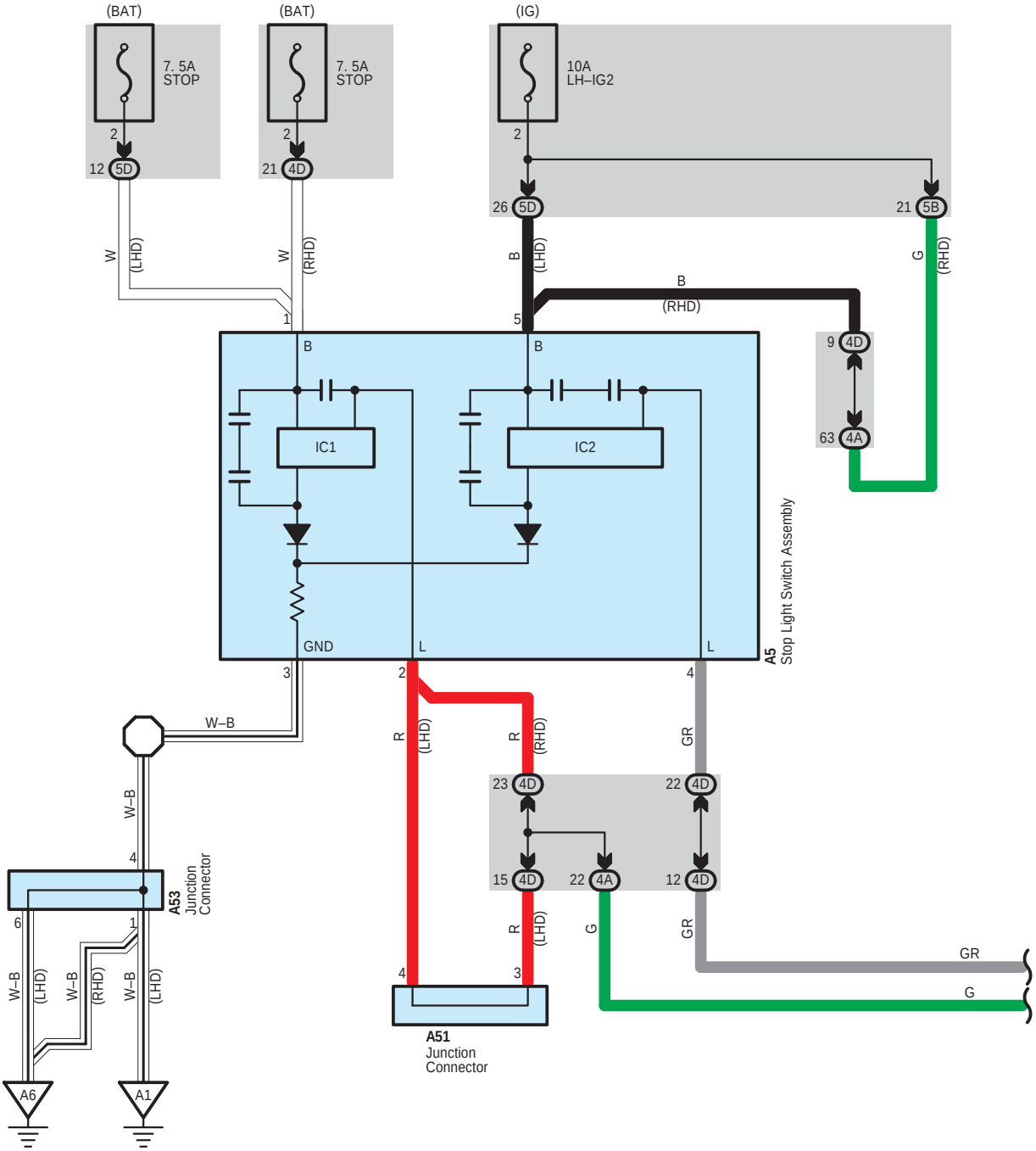
(BAT)
7. 5A
STOP
(BAT)
7. 5A
STOP
(IG)
10A
LH–IG2
12 5D
21 4D
26 5D
21 5B
W (LHD)
W (RHD)
B (LHD)
B (RHD)
G (RHD)
9 4D
63 4A
IC1
IC2
GND
L
L
A5
Stop Light Switch Assembly
W–B
R (LHD)
R (RHD)
GR
23 4D
22 4D
15 4D
22 4A
12 4D
R (LHD)
G
GR
A53
Junction
Connector
W–B (LHD)
W–B (RHD)
W–B (LHD)
A51
Junction
Connector
A6
A1

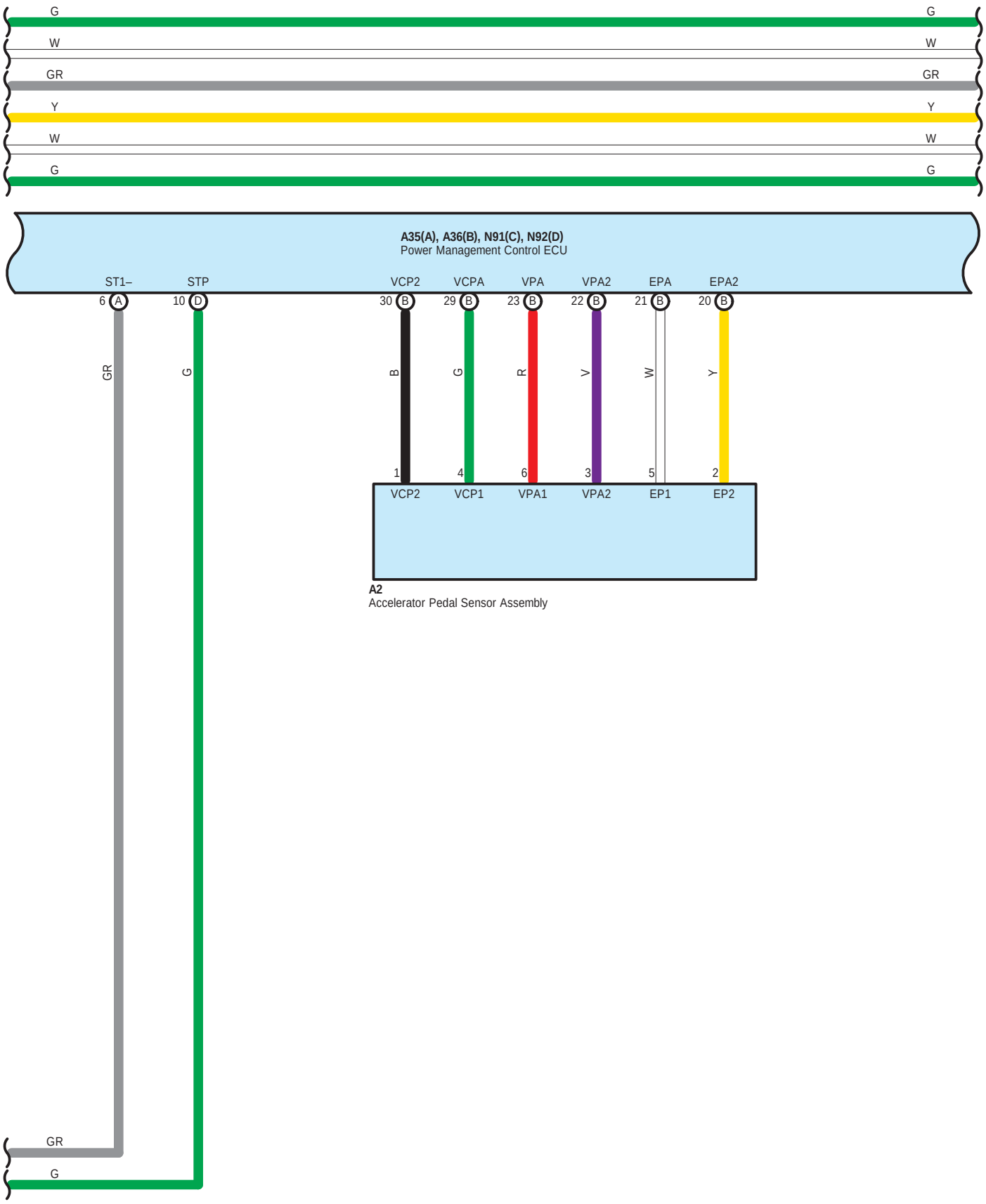
G
W
GR
Y
W
G
A35(A), A36(B), N91(C), N92(D)
Power Management Control ECU
ST1–
STP
VCP2
VCPA
VPA
VPA2
EPA
EPA2
6 A
10 D
30 B
29 B
23 B
22 B
21 B
20 B
GR
G
B
G
R
V
W
Y
1
4
6
3
5
2
VCP2
VCP1
VPA1
VPA2
EP1
EP2
A2
Accelerator Pedal Sensor Assembly
GR
G

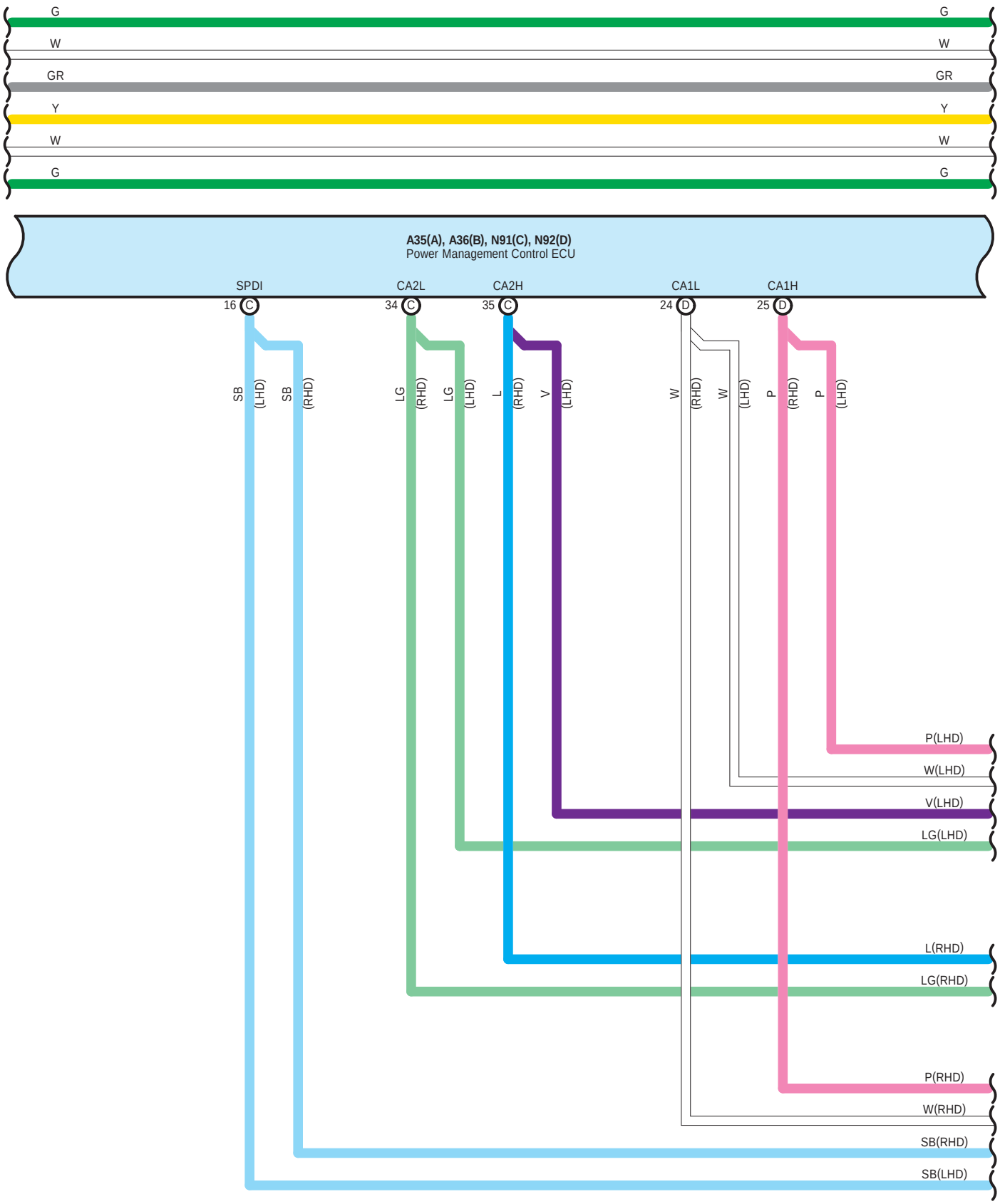
G
W
GR
Y
W
G
A35(A), A36(B), N91(C), N92(D)
Power Management Control ECU
SPDI
16 C
CA2L
34 C
CA2H
35 C
CA1L
24 D
CA1H
25 D
SB (LHD)
SB (RHD)
LG (RHD)
LG (LHD)
L (RHD)
V (LHD)
W (RHD)
W (LHD)
P (RHD)
P (LHD)
P(LHD)
W(LHD)
V(LHD)
LG(LHD)
L(RHD)
LG(RHD)
P(RHD)
W(RHD)
SB(RHD)
SB(LHD)

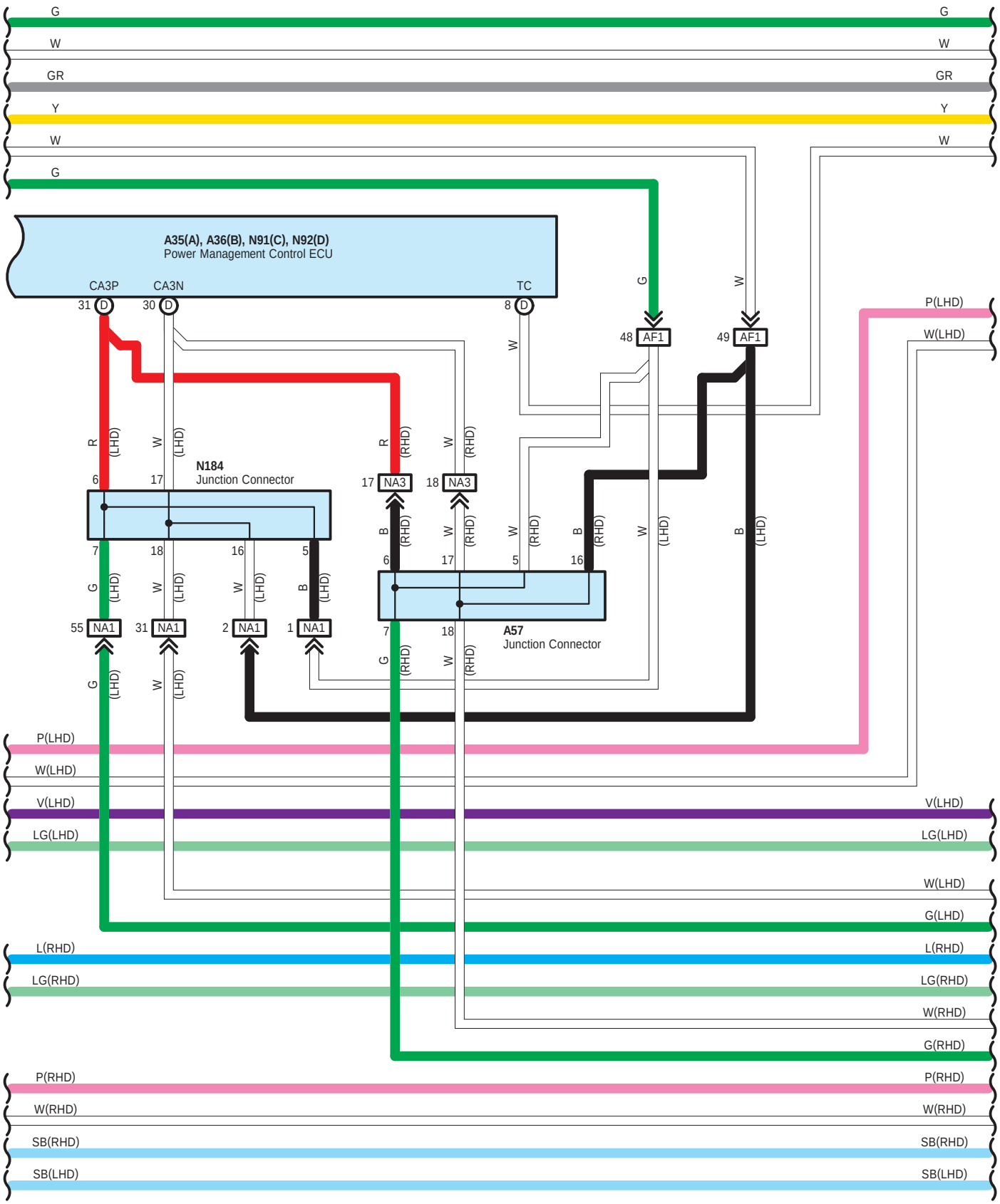
A35(A), A36(B), N91(C), N92(D)
Power Management Control ECU
CA3P
CA3N
TC
31 D
30 D
8 D
48 AF1
49 AF1
N184
Junction Connector
17 NA3
18 NA3
A57
Junction Connector
55 NA1
31 NA1
2 NA1
1 NA1
G
W
GR
Y
P(LHD)
W(LHD)
V(LHD)
LG(LHD)
G(LHD)
L(RHD)
LG(RHD)
W(RHD)
G(RHD)
P(RHD)
SB(RHD)
SB(LHD)

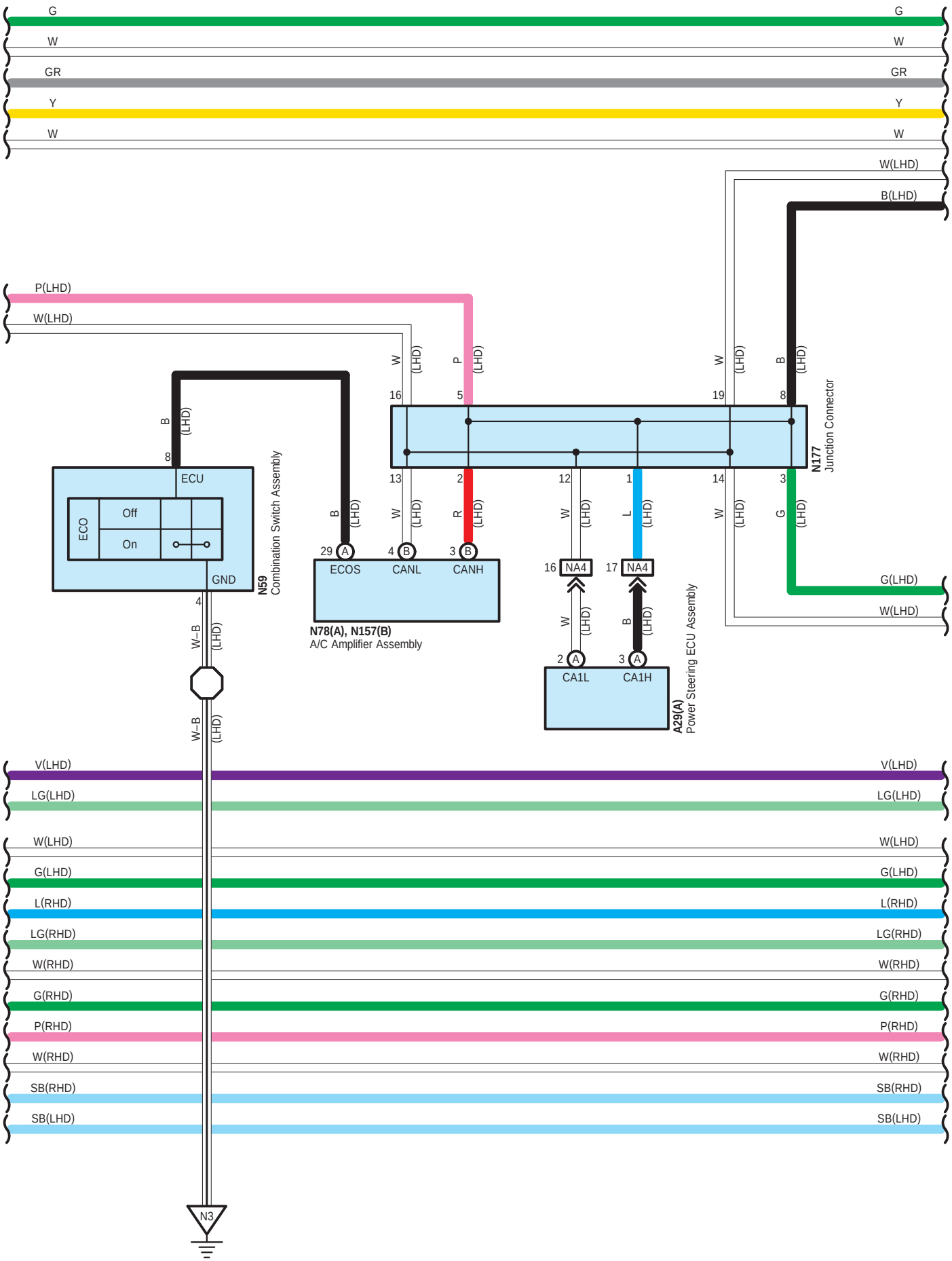
G
W
GR
Y
W
W(LHD)
B(LHD)
P(LHD)
W(LHD)
W (LHD)
P (LHD)
W (LHD)
B (LHD)
16
5
19
8
N177
Junction Connector
B (LHD)
8
ECU
ECO
Off
On
GND
N59
Combination Switch Assembly
B (LHD)
13
2
12
1
14
3
W (LHD)
R (LHD)
W (LHD)
L (LHD)
W (LHD)
G (LHD)
29 A
4 B
3 B
ECOS
CANL
CANH
N78(A), N157(B)
A/C Amplifier Assembly
16 NA4
17 NA4
W (LHD)
B (LHD)
2 A
3 A
CA1L
CA1H
A29(A)
Power Steering ECU Assembly
G(LHD)
W(LHD)
4
W–B (LHD)
W–B (LHD)
V(LHD)
LG(LHD)
W(LHD)
G(LHD)
L(RHD)
LG(RHD)
W(RHD)
G(RHD)
P(RHD)
W(RHD)
SB(RHD)
SB(LHD)
N3

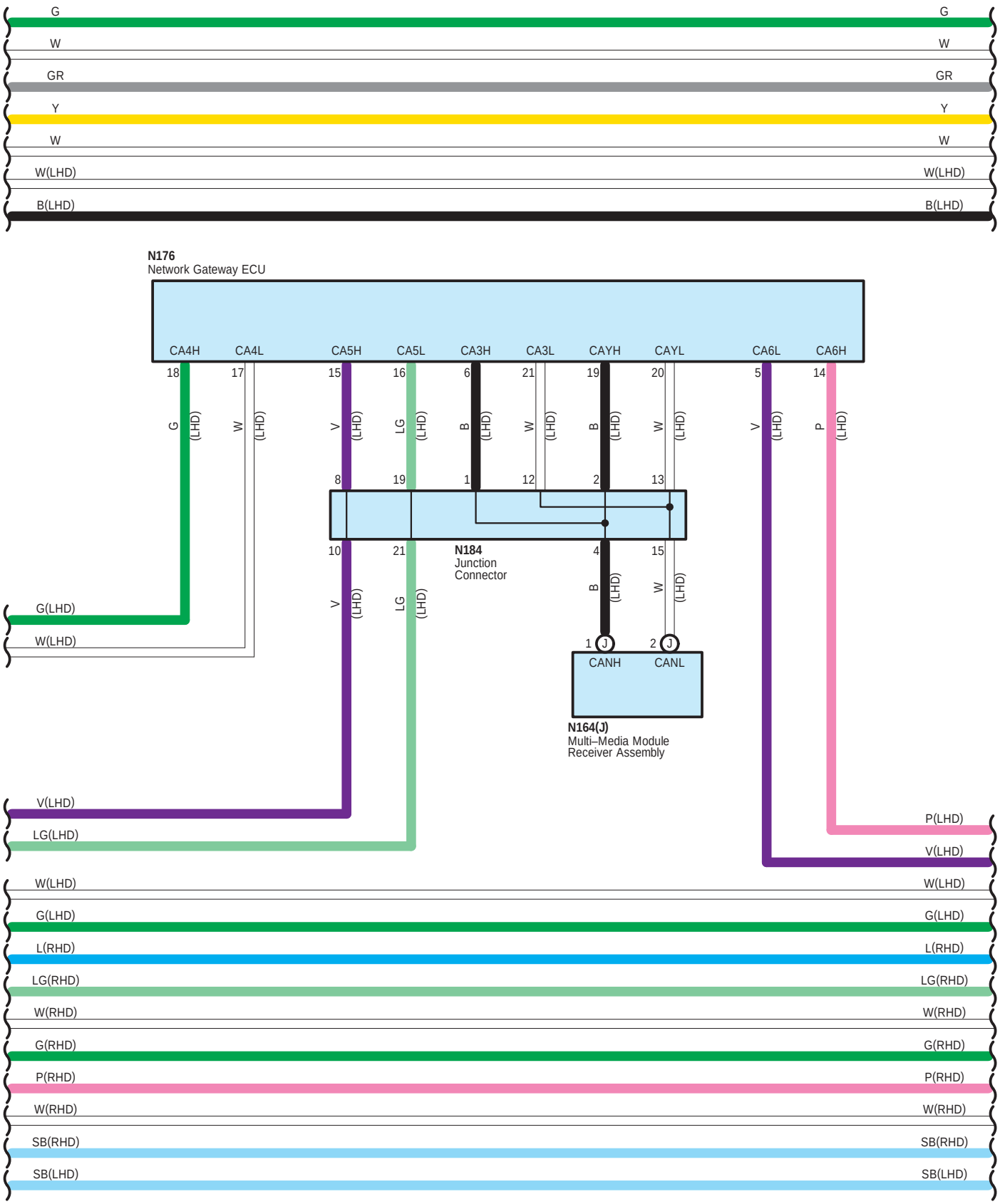
G
W
GR
Y
W
W(LHD)
B(LHD)
N176
Network Gateway ECU
CA4H
CA4L
CA5H
CA5L
CA3H
CA3L
CAYH
CAYL
CA6L
CA6H
18
17
15
16
6
21
19
20
5
14
G (LHD)
W (LHD)
V (LHD)
LG (LHD)
B (LHD)
W (LHD)
B (LHD)
W (LHD)
V (LHD)
P (LHD)
8
19
1
12
2
13
N184
Junction
Connector
10
21
4
15
V (LHD)
LG (LHD)
B (LHD)
W (LHD)
G(LHD)
W(LHD)
1 J
2 J
CANH
CANL
N164(J)
Multi–Media Module
Receiver Assembly
V(LHD)
LG(LHD)
P(LHD)
V(LHD)
W(LHD)
G(LHD)
L(RHD)
LG(RHD)
W(RHD)
G(RHD)
P(RHD)
W(RHD)
SB(RHD)
SB(LHD)

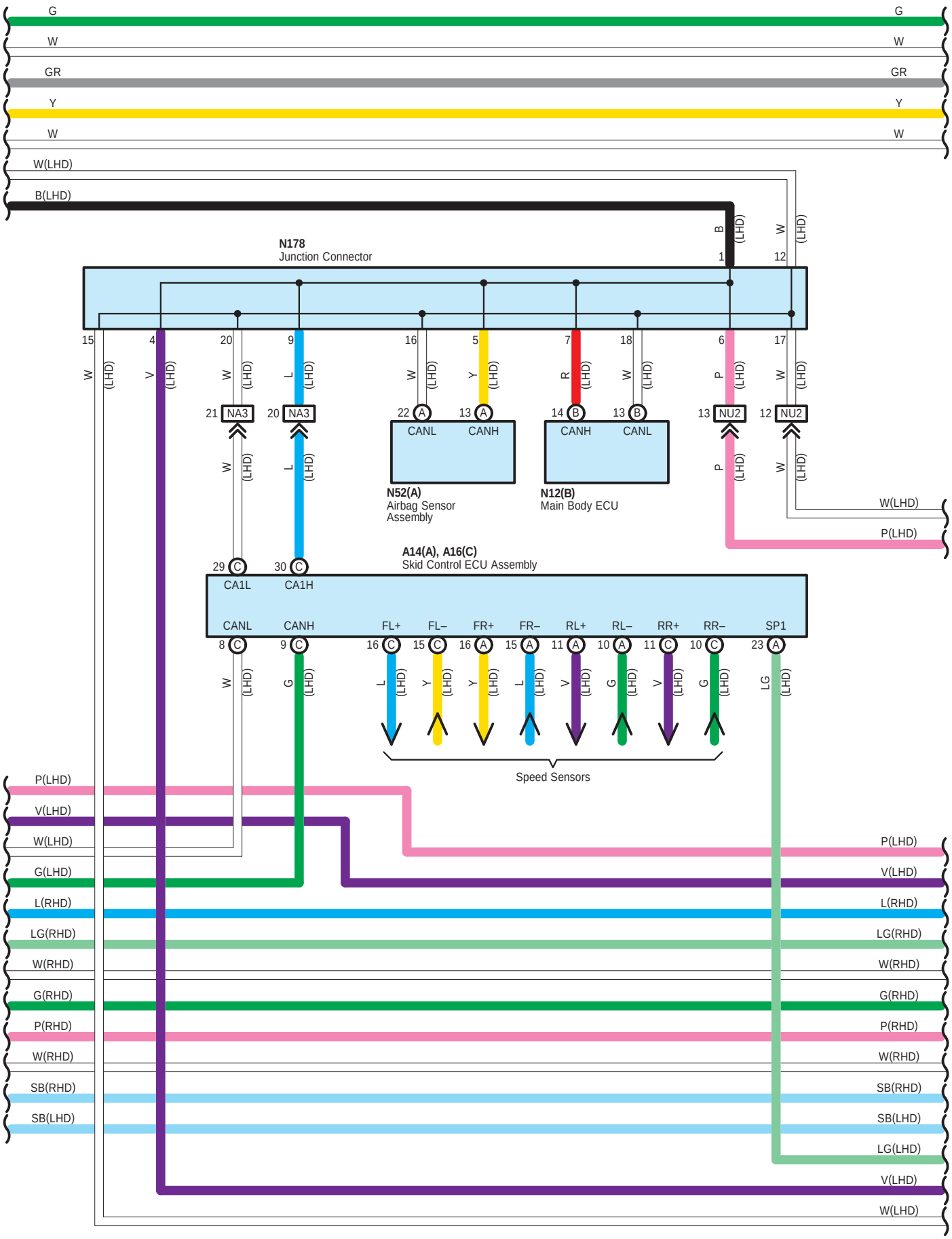
G
W
GR
Y
W
W(LHD)
B(LHD)
N178
Junction Connector
NA3
NU2
CANL
CANH
N52(A)
Airbag Sensor
Assembly
N12(B)
Main Body ECU
A14(A), A16(C)
Skid Control ECU Assembly
CA1L
CA1H
FL+
FL–
FR+
FR–
RL+
RL–
RR+
RR–
SP1
Speed Sensors
P(LHD)
V(LHD)
G(LHD)
L(RHD)
LG(RHD)
G(RHD)
P(RHD)
SB(RHD)
SB(LHD)
LG(LHD)

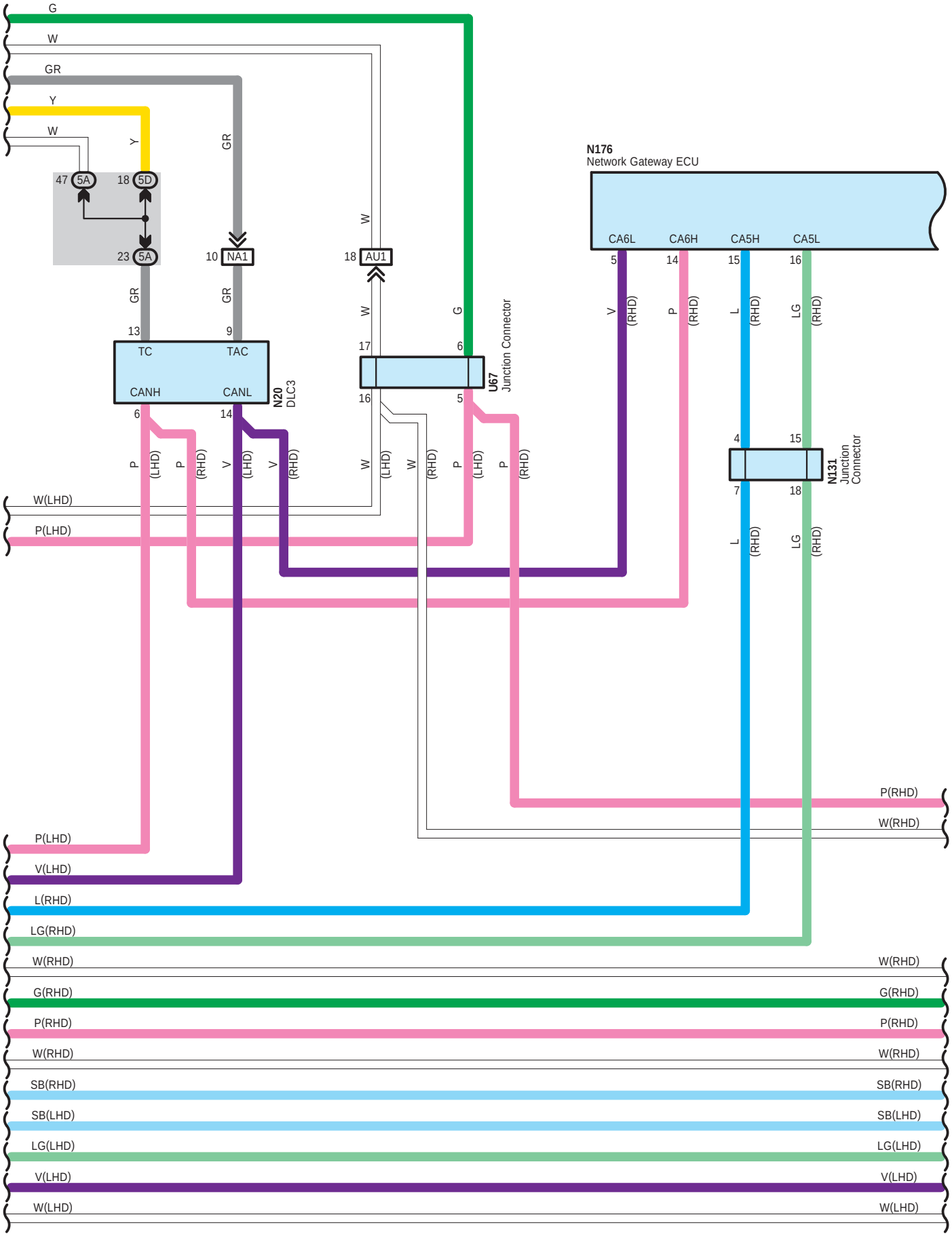
G
W
GR
Y
W
Y
GR
47 5A
18 5D
23 5A
10 NA1
18 AU1
W
GR
GR
13
9
TC
TAC
CANH
CANL
N20
DLC3
6
14
W
G
17
6
16
5
U67
Junction Connector
N176
Network Gateway ECU
CA6L
CA6H
CA5H
CA5L
5
14
15
16
V (RHD)
P (RHD)
L (RHD)
LG (RHD)
4
15
7
18
N131
Junction Connector
P (LHD)
P (RHD)
V (LHD)
V (RHD)
W (LHD)
W (RHD)
P (LHD)
P (RHD)
W(LHD)
P(LHD)
P(RHD)
W(RHD)
P(LHD)
V(LHD)
L(RHD)
LG(RHD)
W(RHD)
G(RHD)
P(RHD)
W(RHD)
SB(RHD)
SB(LHD)
LG(LHD)
V(LHD)
W(LHD)

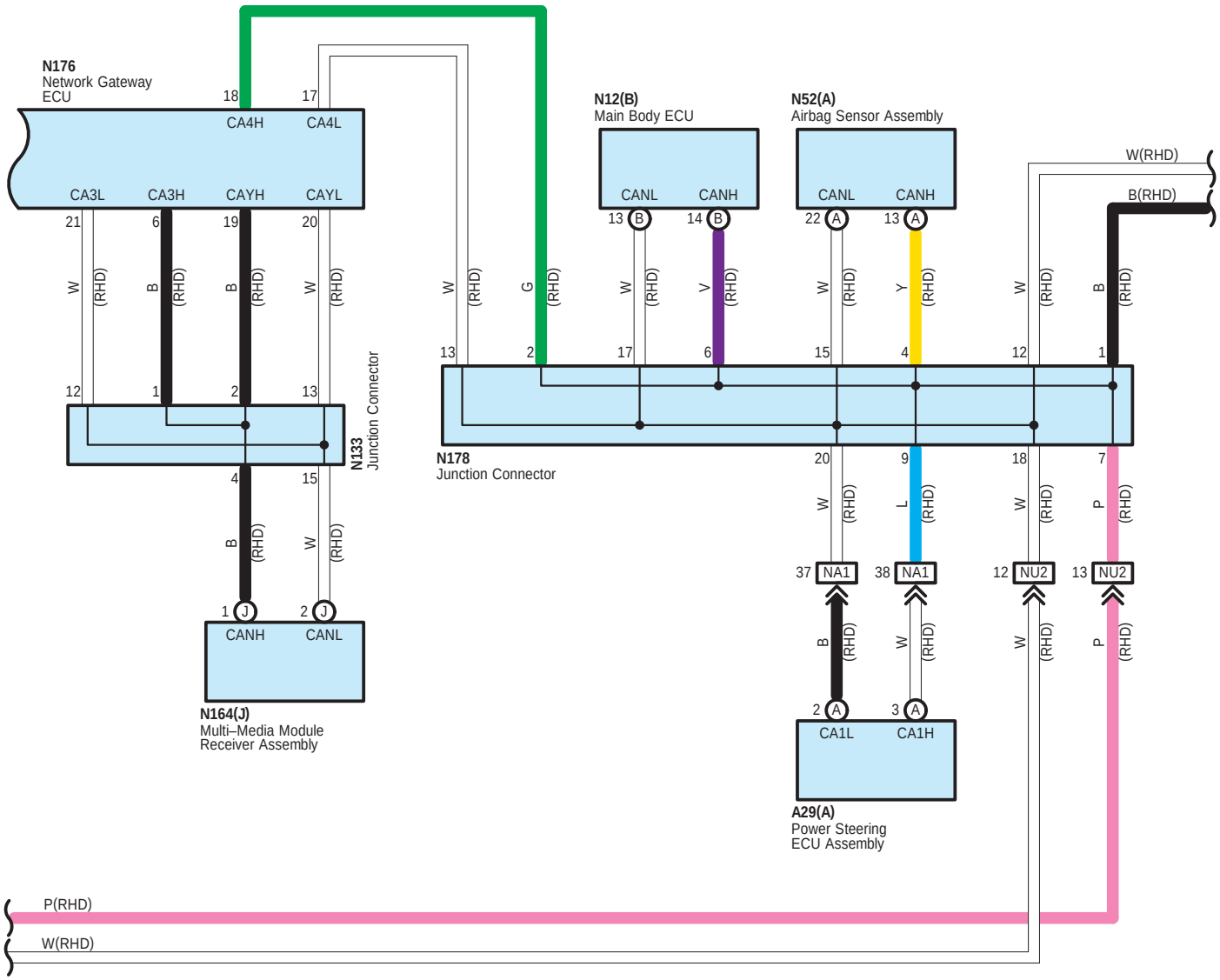
N176
Network Gateway
ECU
CA4H
CA4L
CA3L
CA3H
CAYH
CAYL
N133
Junction Connector
N178
Junction Connector
N12(B)
Main Body ECU
CANL
CANH
N52(A)
Airbag Sensor Assembly
CANL
CANH
W(RHD)
B(RHD)
N164(J)
Multi–Media Module
Receiver Assembly
CANH
CANL
NA1
NU2
A29(A)
Power Steering
ECU Assembly
CA1L
CA1H
P(RHD)
W(RHD)

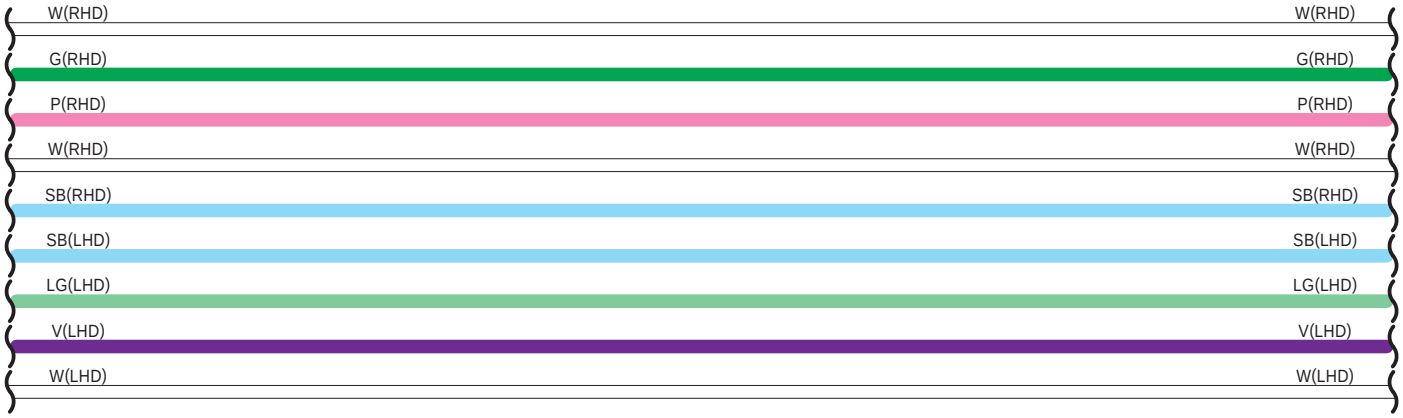
W(RHD)
G(RHD)
P(RHD)
W(RHD)
SB(RHD)
SB(LHD)
LG(LHD)
V(LHD)
W(LHD)

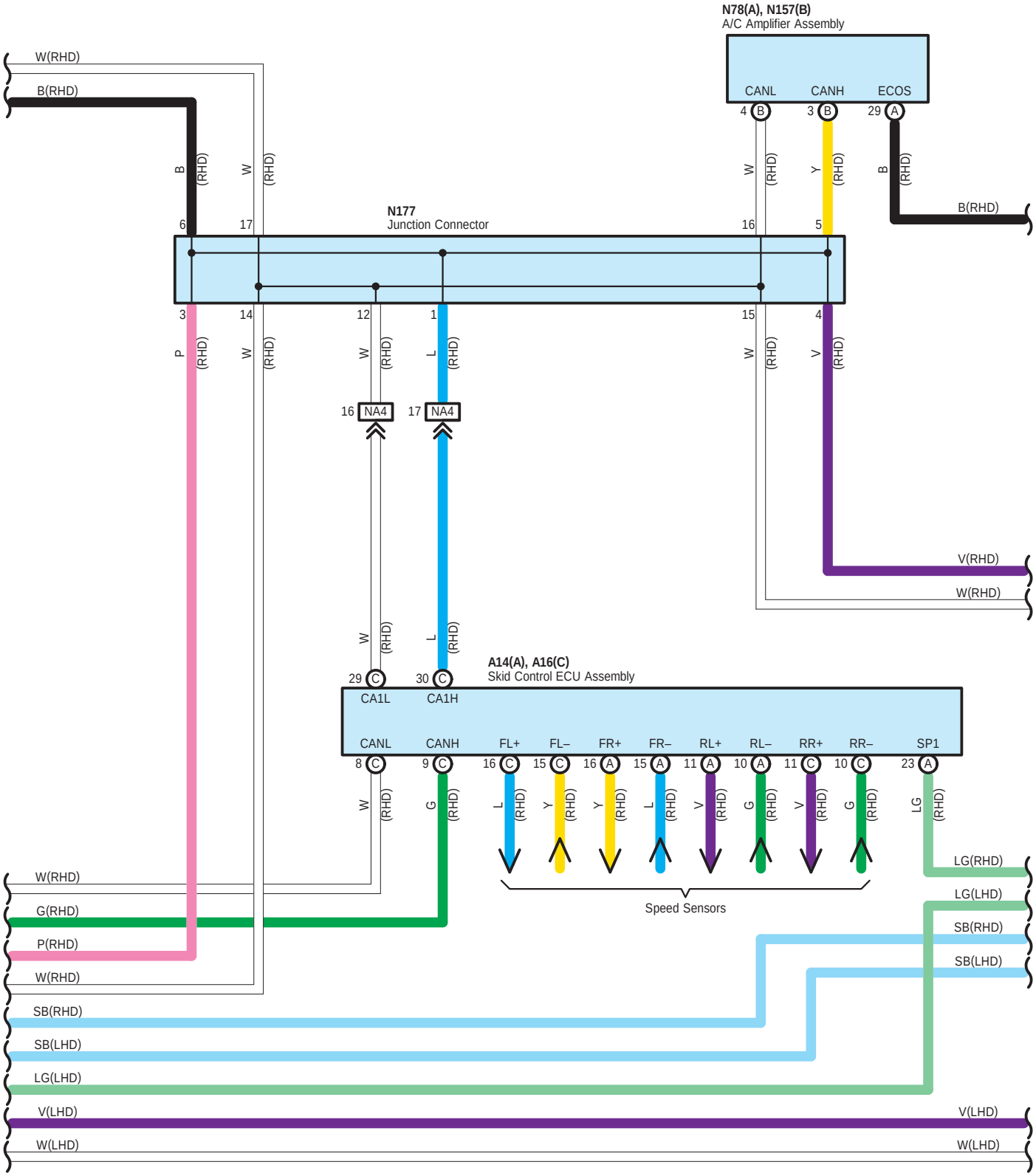
N78(A), N157(B)
A/C Amplifier Assembly
CANL
CANH
ECOS
N177
Junction Connector
NA4
A14(A), A16(C)
Skid Control ECU Assembly
CA1L
CA1H
CANL
CANH
FL+
FL–
FR+
FR–
RL+
RL–
RR+
RR–
SP1
Speed Sensors
W(RHD)
B(RHD)
G(RHD)
P(RHD)
SB(RHD)
SB(LHD)
LG(LHD)
V(LHD)
W(LHD)
V(RHD)
LG(RHD)

*15 : w/ Headup Display

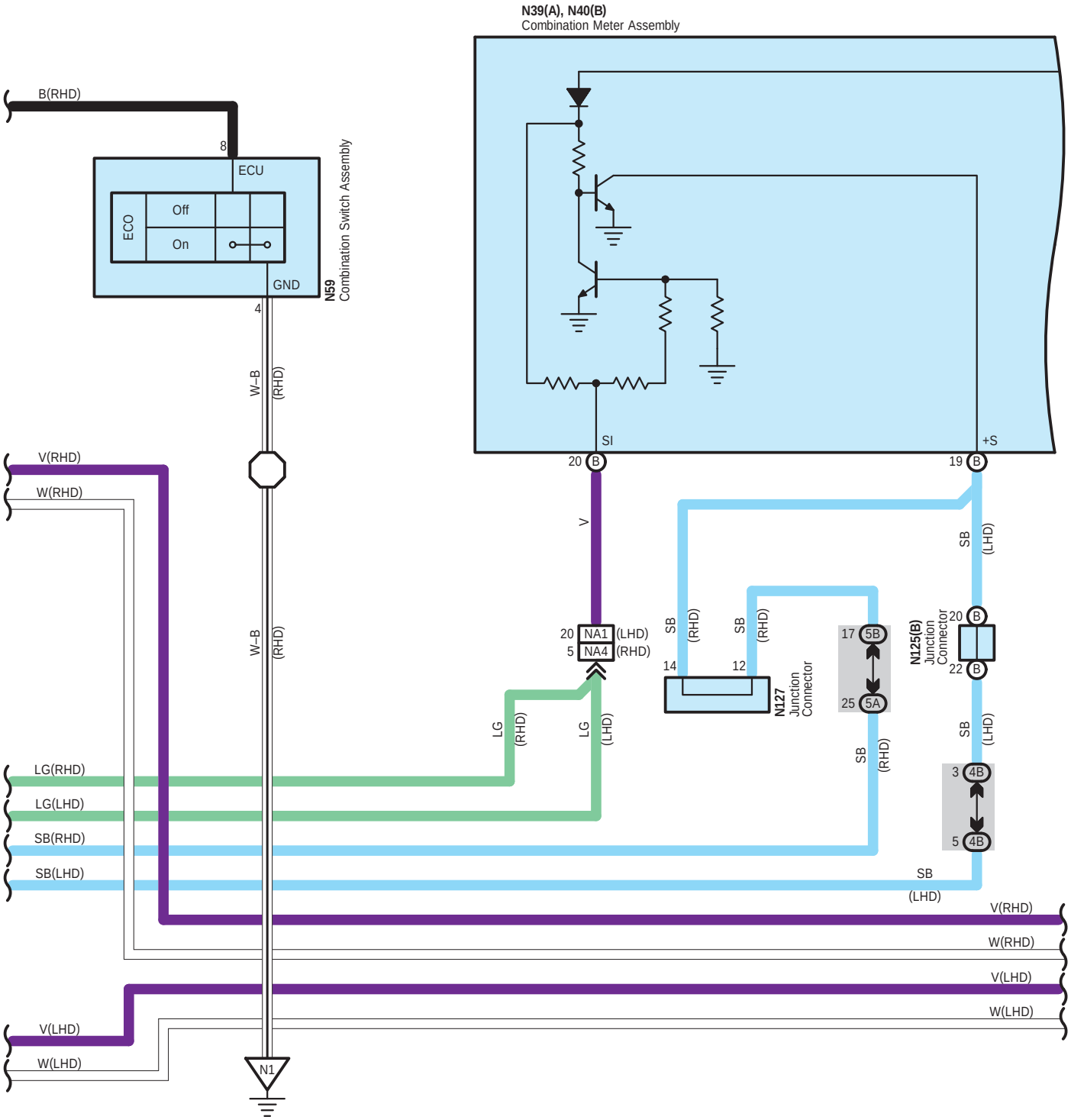

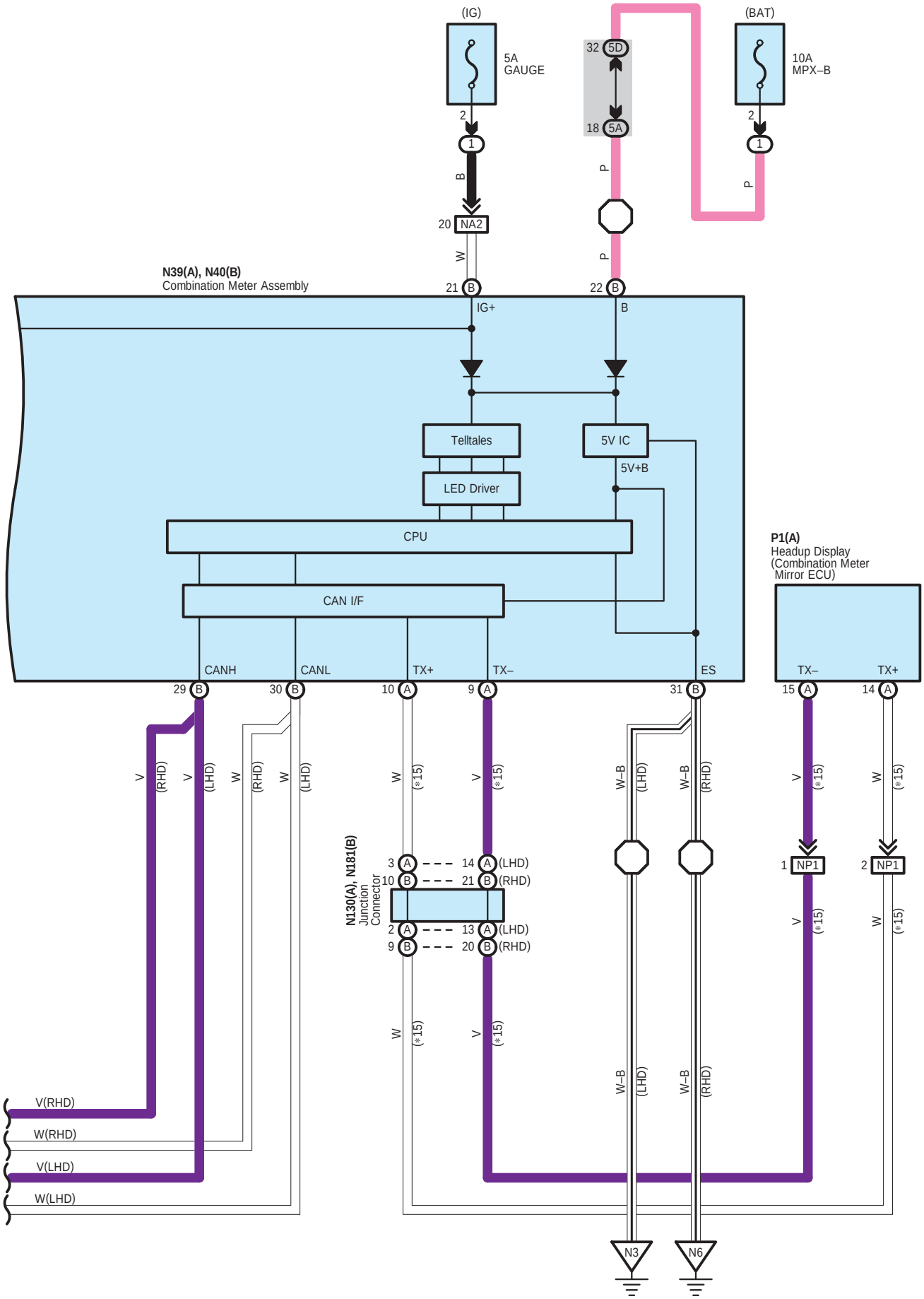
(IG)
5A
GAUGE
(BAT)
10A
MPX–B
32 5D
18 5A
2
1
B
P
20 NA2
W
N39(A), N40(B)
Combination Meter Assembly
21 B
22 B
IG+
B
Telltales
5V IC
5V+B
LED Driver
CPU
CAN I/F
P1(A)
Headup Display
(Combination Meter
Mirror ECU)
CANH
CANL
TX+
TX–
ES
29 B
30 B
10 A
9 A
31 B
15 A
14 A
V
(RHD)
(LHD)
W
(*15)
W–B
1 NP1
2 NP1
N130(A), N181(B)
Junction
Connector
3 A
10 B
14 A (LHD)
21 B (RHD)
2 A
9 B
13 A (LHD)
20 B (RHD)
V(RHD)
W(RHD)
V(LHD)
W(LHD)
N3
N6

A 2
Black

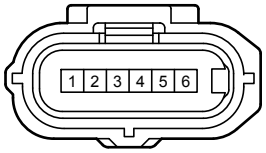

A 5
White

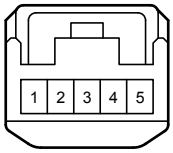

A 14
Black

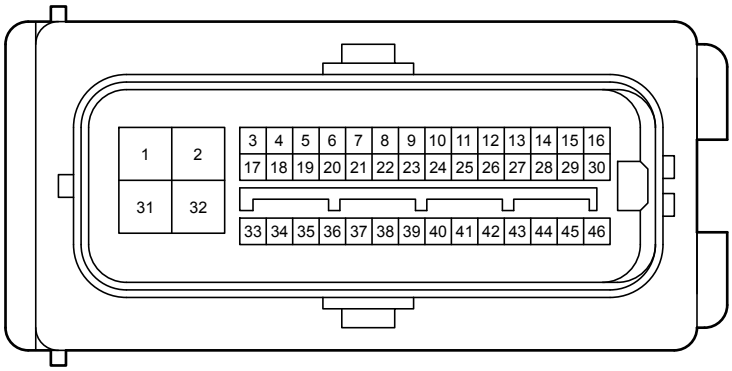

A 16
Gray

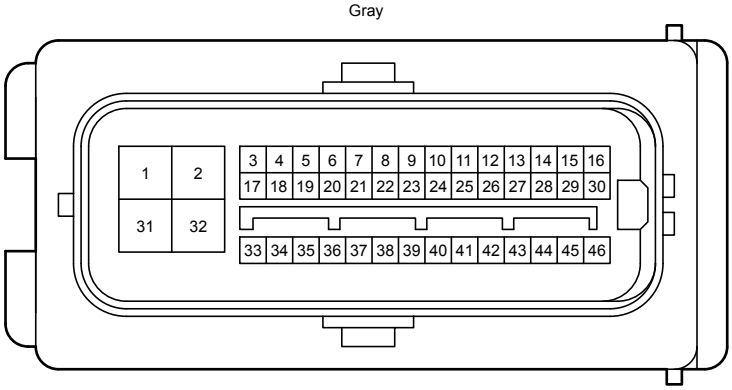

A 29
Black

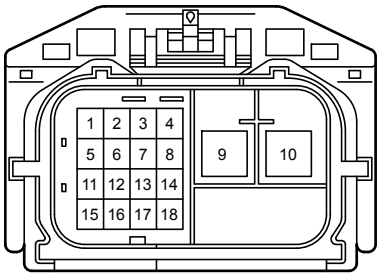

A 35
Gray

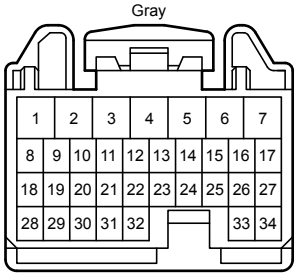

A 36
Gray

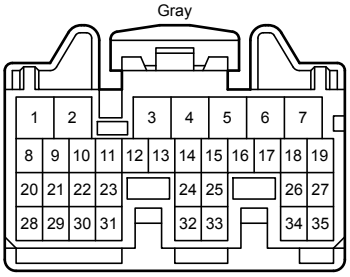

A 50
Gray

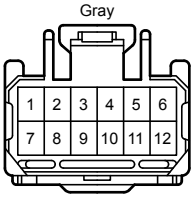

A 51
Blue

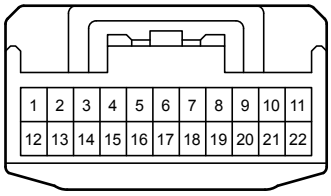

A 53
White

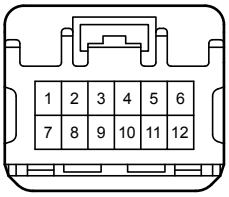

A 57
Blue

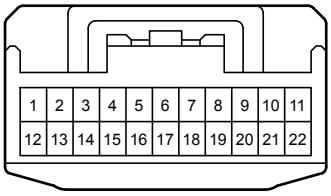

A 69
Gray

A 79
Black

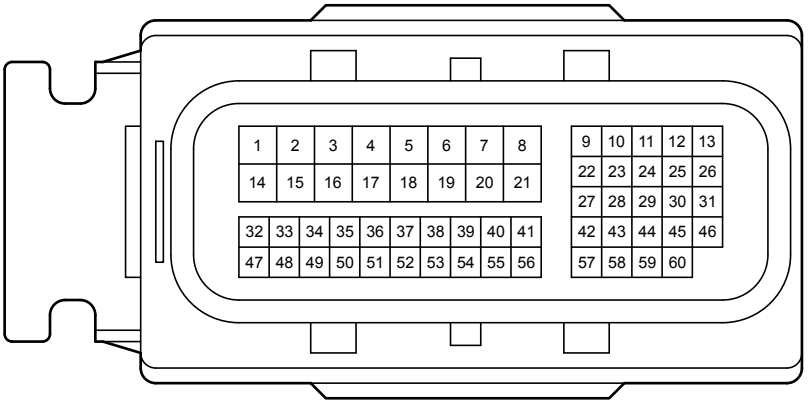

B 4
Black

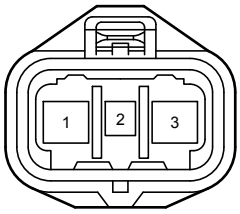

F 24
Black

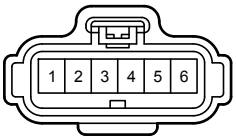

F 32
Gray

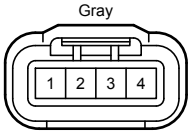

F 33
Black

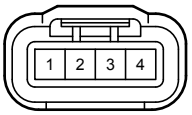

F 39
Black

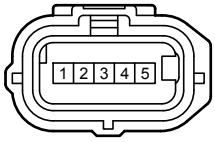

F 45
Black

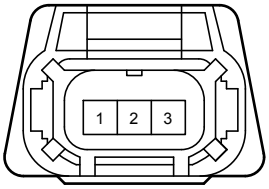

F 59
Gray

F 65
Gray

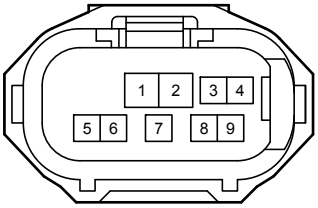

F 66
Gray

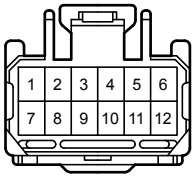

F 70
Black

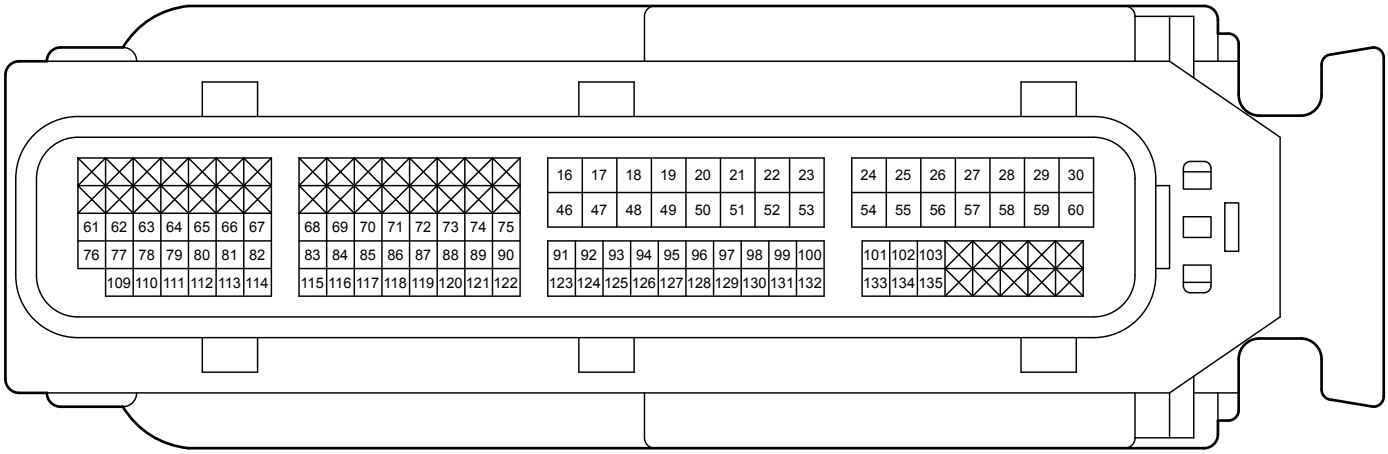

F 71
Gray

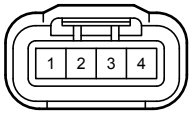

F 72
Gray

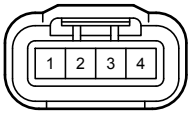

F 73
Black

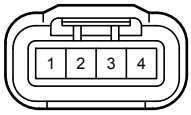

F 74
Black

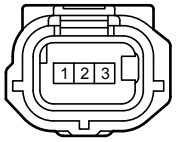

F 75
Gray

F 76
Black

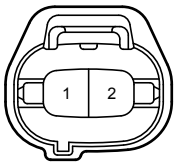

F 77
Black

F 78
Black

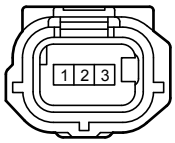

F 79
Black

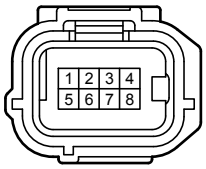

F 80
Black

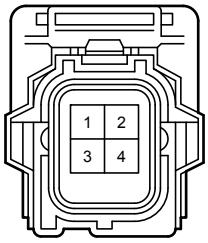

F 81
White

F 82
Black

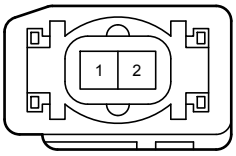

F 83
White

F 84
Black

F 85
Black

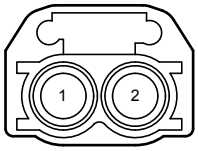

J 3
Black

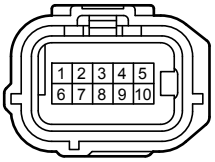

J 4
Black

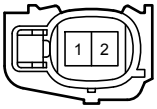

J 5
Black

J 6
Black

J 7
Black

J 8
Black

K 5
Black

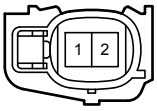

K 6
Black

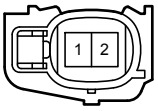

K 7
Black

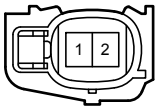

K 8
Black

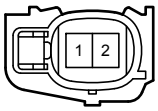

N 12
White

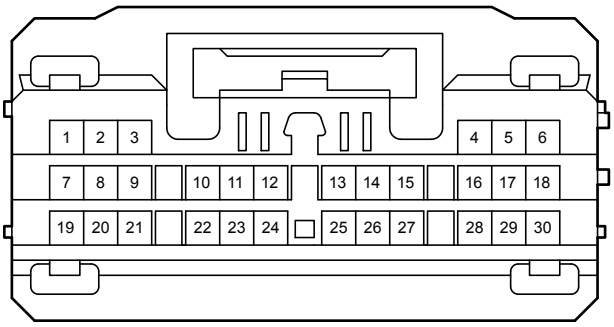

N 20
Black

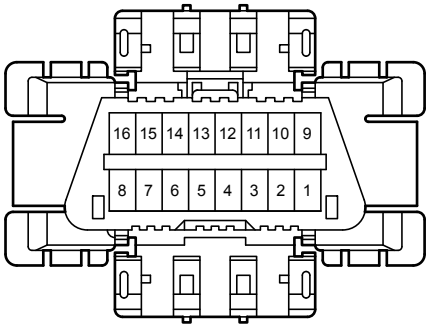

N 39
Black

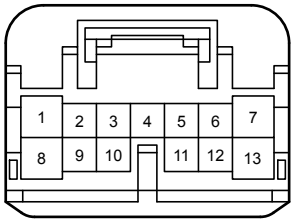

N 40
Black

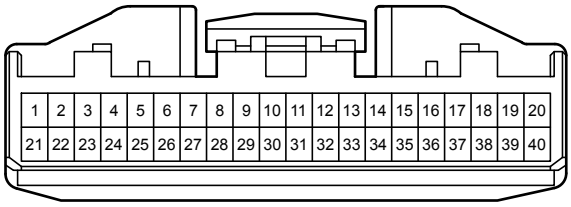

N 43
Black

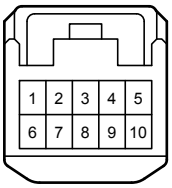

N 52
Yellow

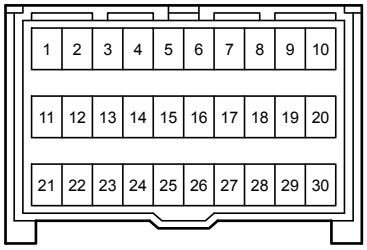

N 59
Black

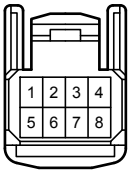

N 78
White

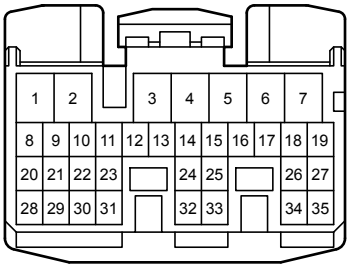

N 91
Gray

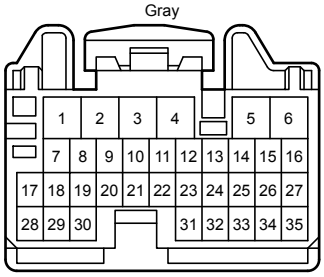

N 92
Gray

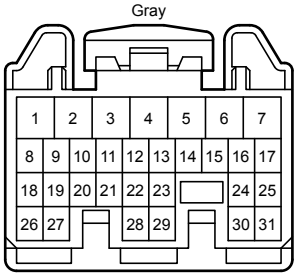

N 94
White

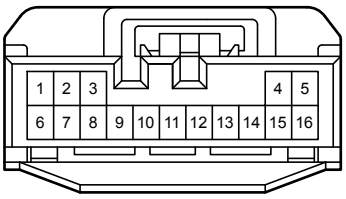

N125
Blue

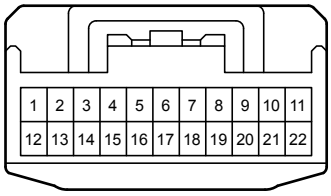

N127
Blue

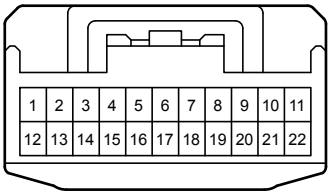

N130
Black

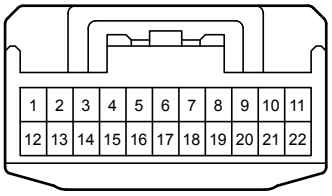

N131
Gray

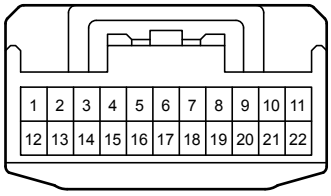

N133
Black

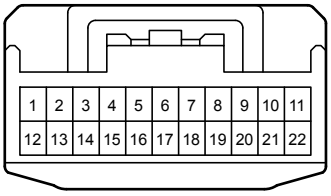

N157
White

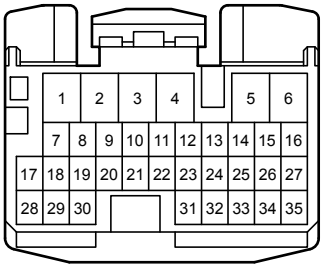

N164
White

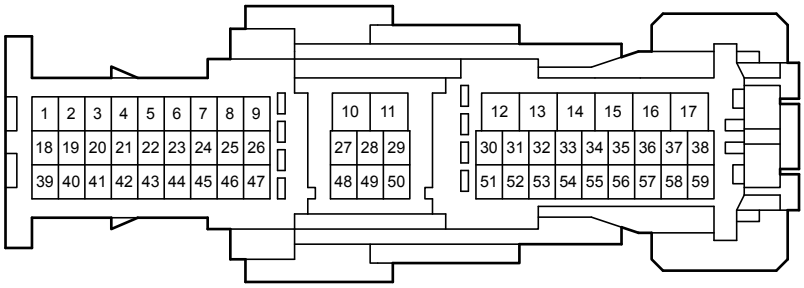

N176
Black

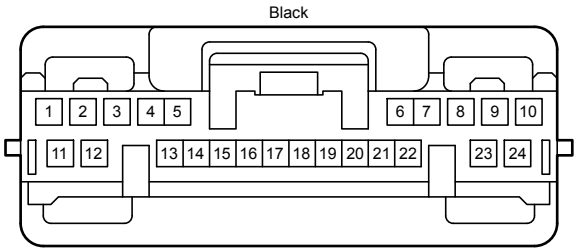

N177
Gray

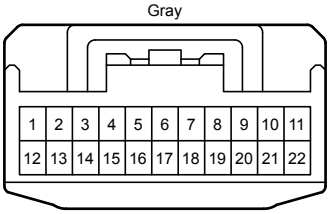

N178
Gray

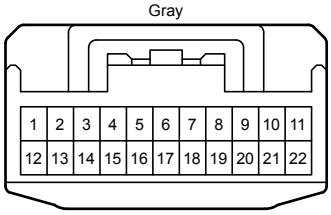

N181
Black

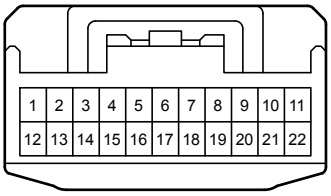

N184
Blue

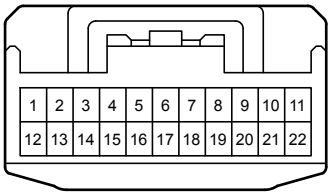

P 1
White

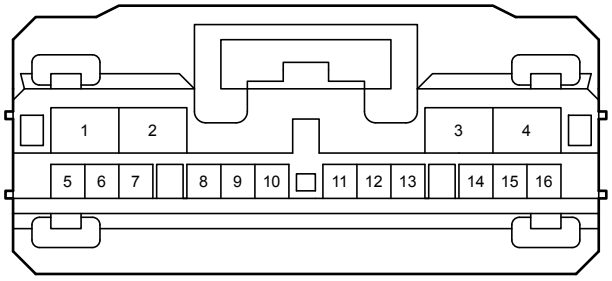

U 61
White

U 63
Black

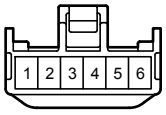

U 67
Gray

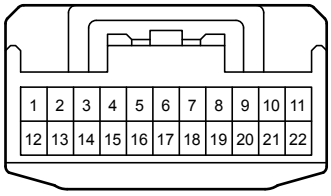

1D
White

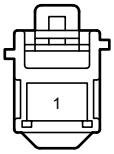

1E
White

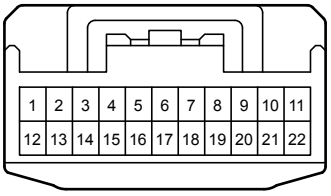

1F
White

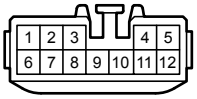

4A
White

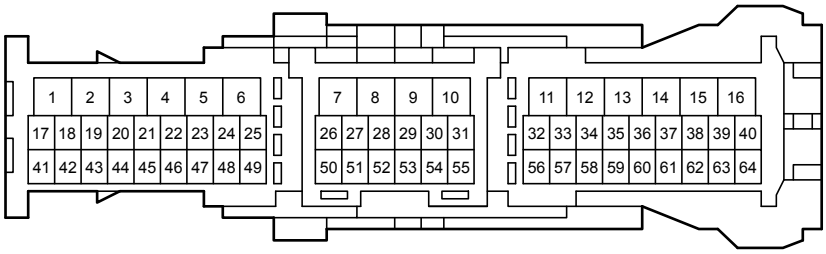

4B
White

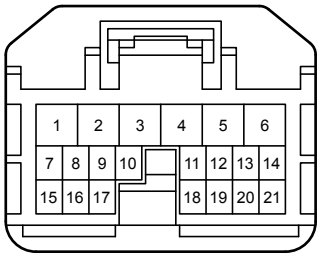

4D
White

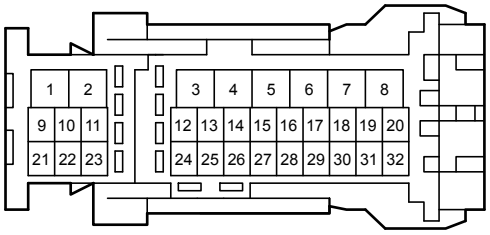

5A
White

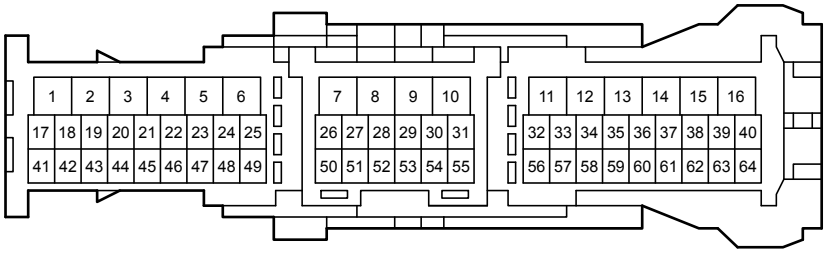

5B
White

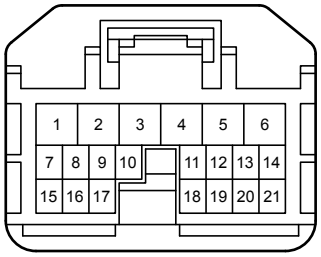

5D
White

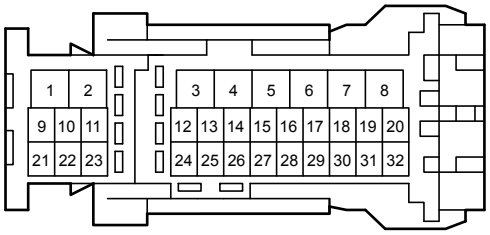

AF1
White

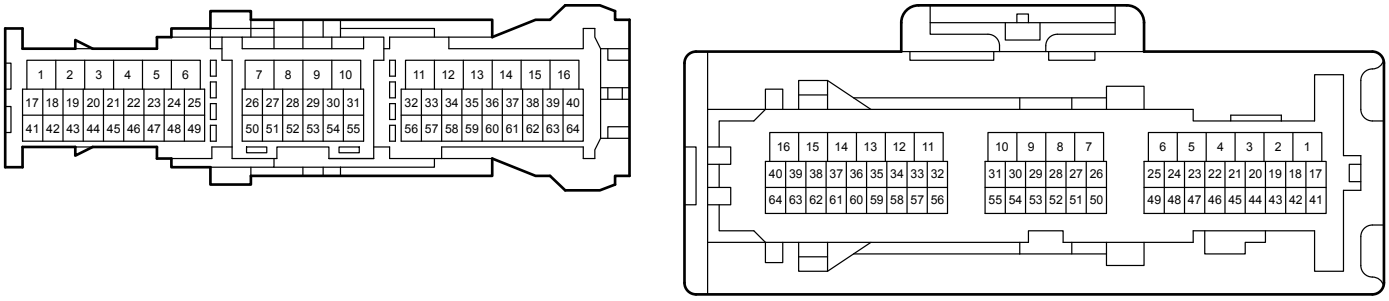

AU1
White

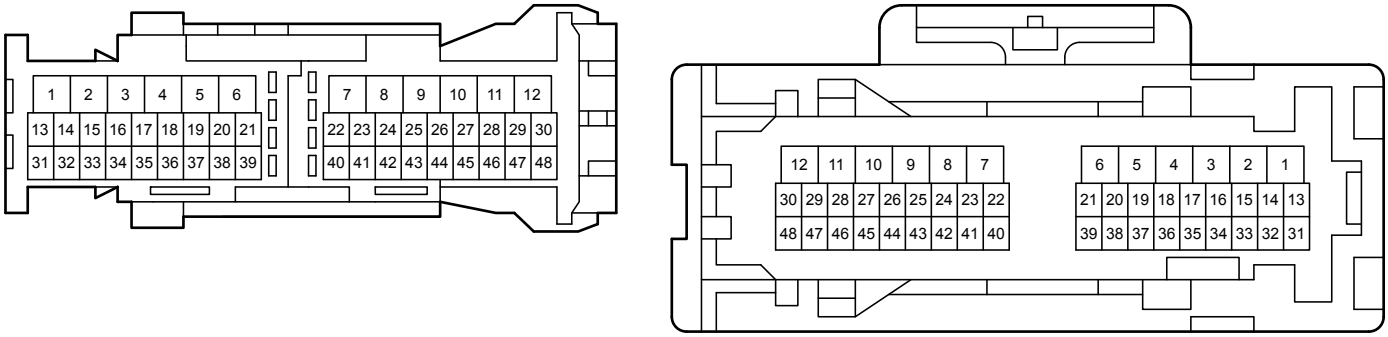

BA2
White

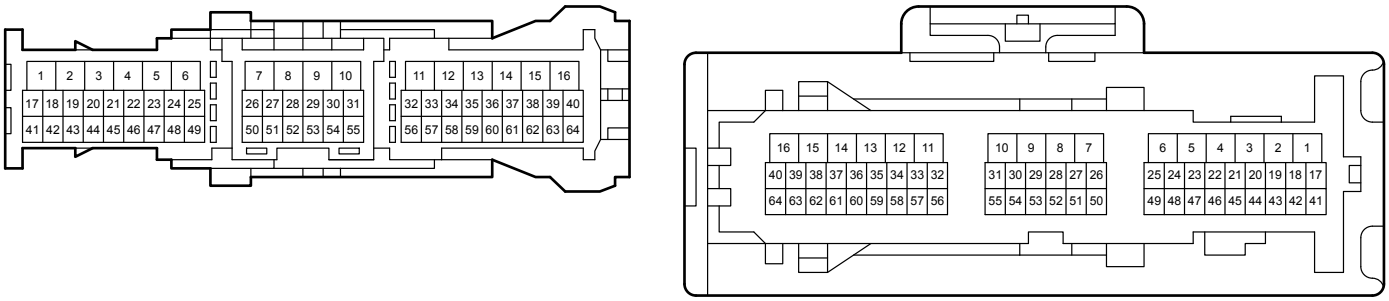

FK1
Black

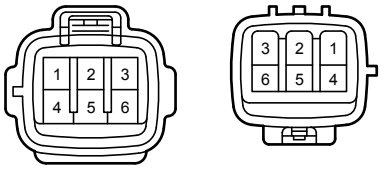

JF1
Gray

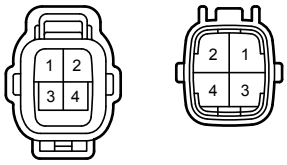

NA1
White

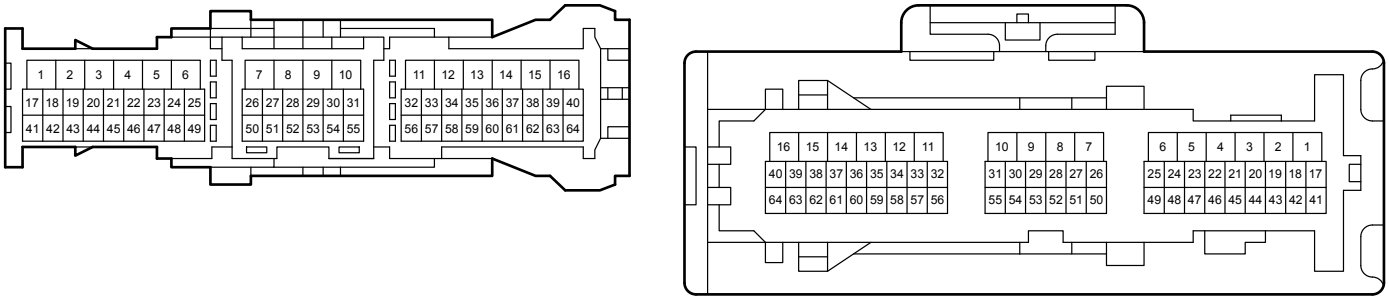

NA2
White

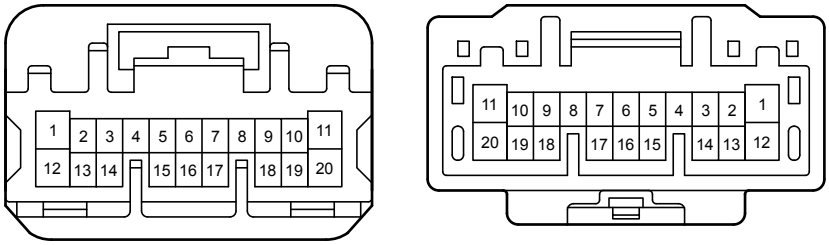

NA3
White

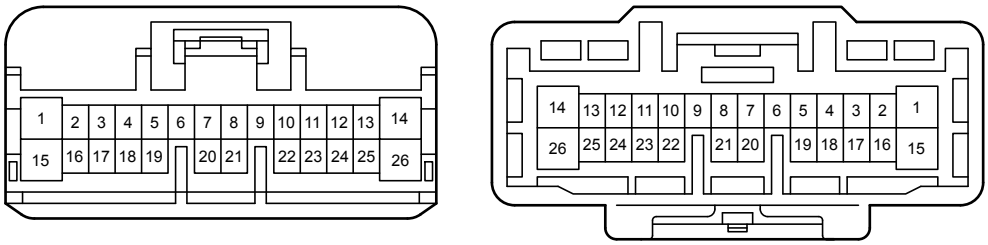

NA4
Gray

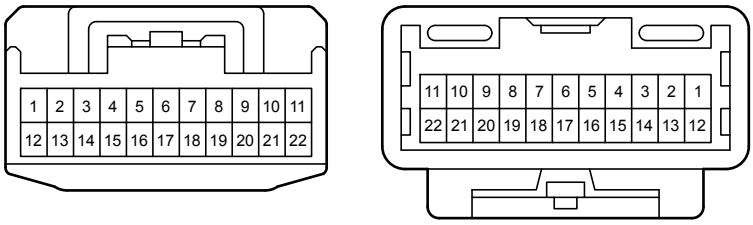

NP1
White

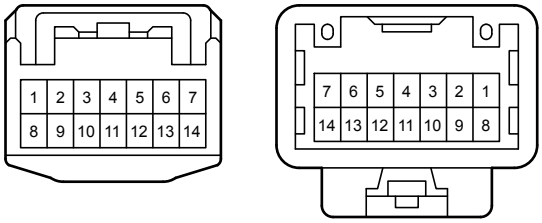

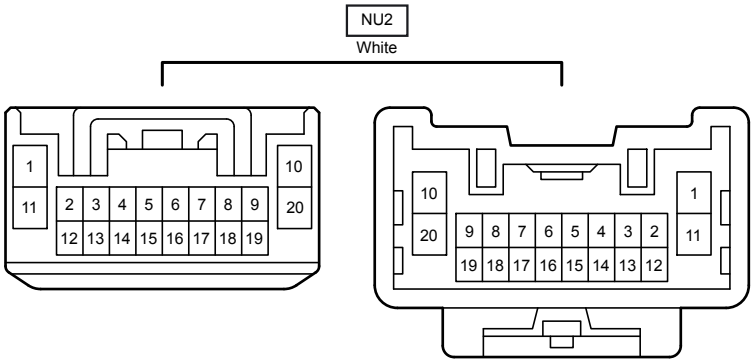
NU2
White
1
10
11
2 3 4 5 6 7 8 9
20
12 13 14 15 16 17 18 19
10
1
20
9 8 7 6 5 4 3 2
11
19 18 17 16 15 14 13 12