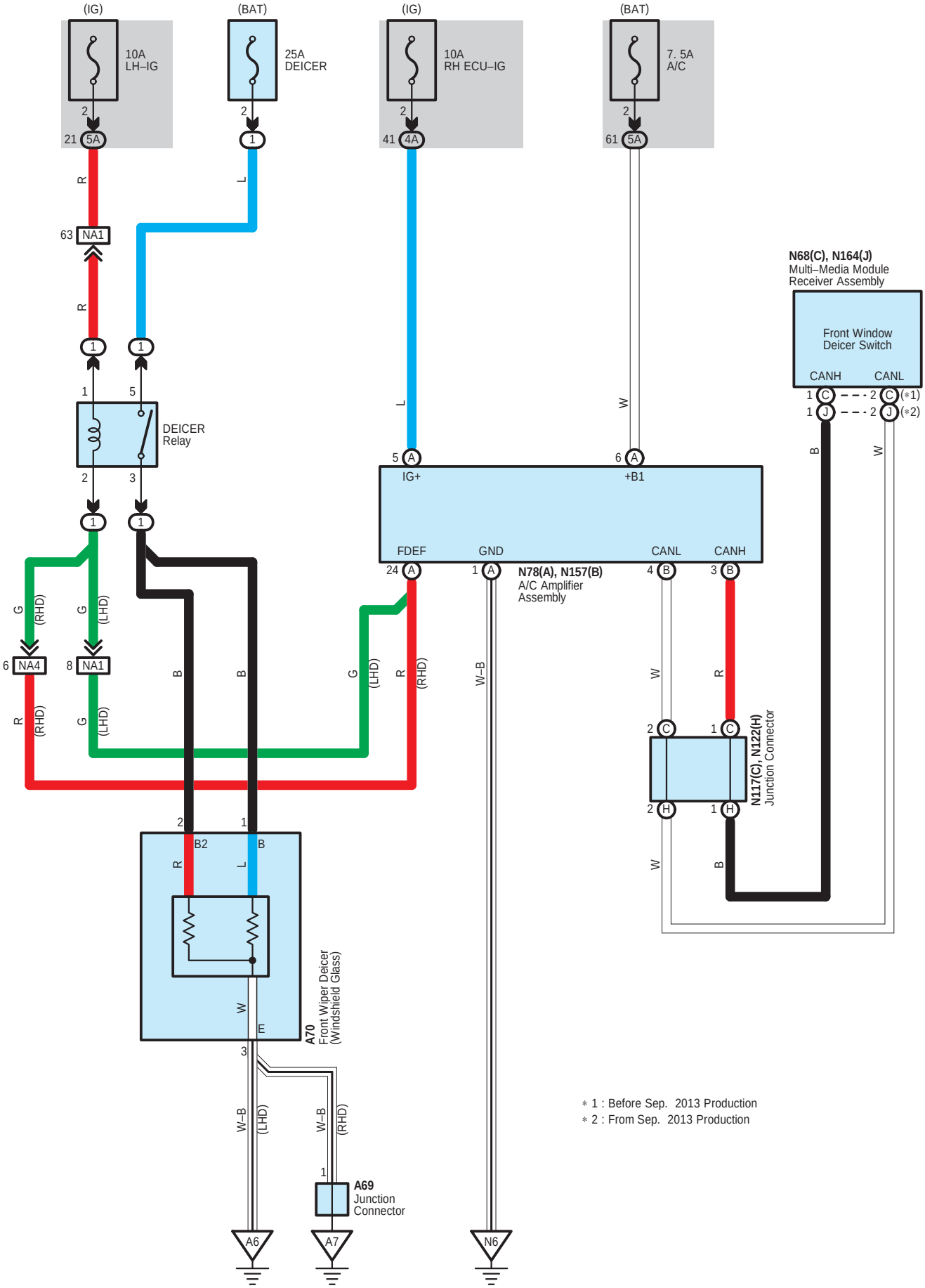
(IG)
10A
LH–IG
(BAT)
25A
DEICER
(IG)
10A
RH ECU–IG
(BAT)
7. 5A
A/C
21 5A
41 4A
61 5A
63 NA1
DEICER
Relay
N68(C), N164(J)
Multi–Media Module
Receiver Assembly
Front Window
Deicer Switch
CANH
CANL
IG+
+B1
FDEF
GND
CANL
CANH
N78(A), N157(B)
A/C Amplifier
Assembly
6 NA4
8 NA1
(RHD)
(LHD)
N117(C), N122(H)
Junction Connector
B2
B
E
A70
Front Wiper Deicer
(Windshield Glass)
W–B
A69
Junction
Connector
A6
A7
N6
∗1 : Before Sep. 2013 Production
∗2 : From Sep. 2013 Production

A 69
Gray

A 70
Black

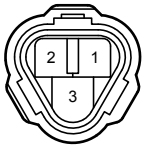

N 68
White

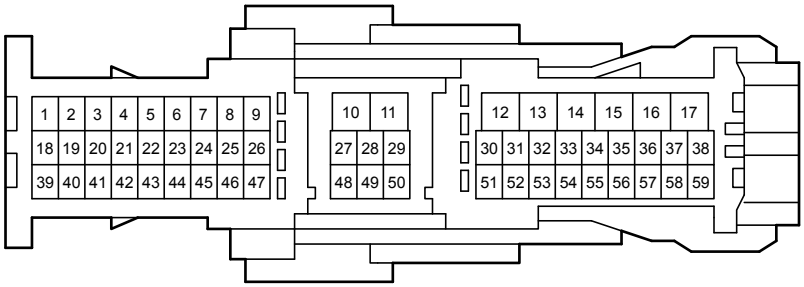

N 78
White

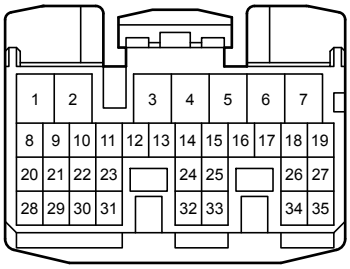

N117
White

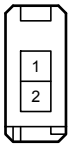

N122
White

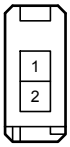

N157
White

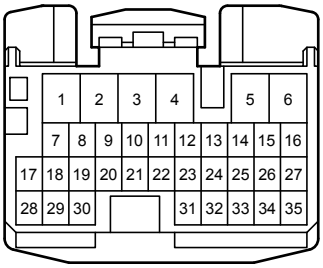

N164
White

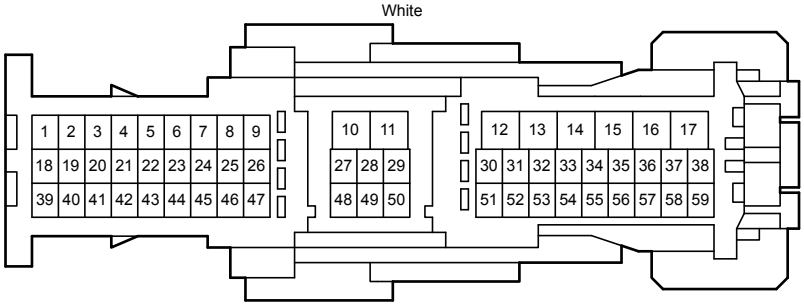

4A
White

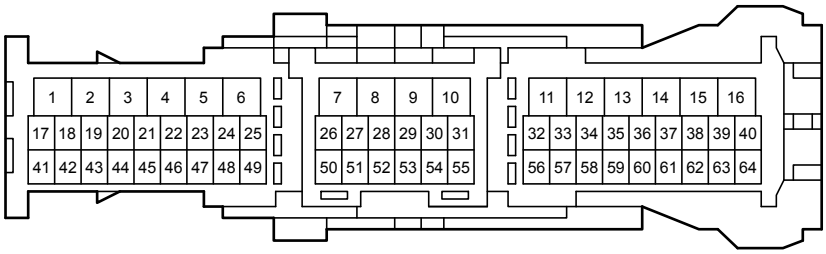

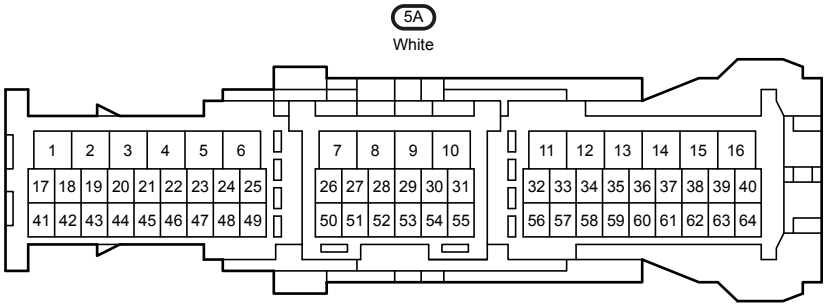
5A
White
1 2 3 4 5 6 7 8 9 10 11 12 13 14 15 16
17 18 19 20 21 22 23 24 25 26 27 28 29 30 31 32 33 34 35 36 37 38 39 40
41 42 43 44 45 46 47 48 49 50 51 52 53 54 55 56 57 58 59 60 61 62 63 64

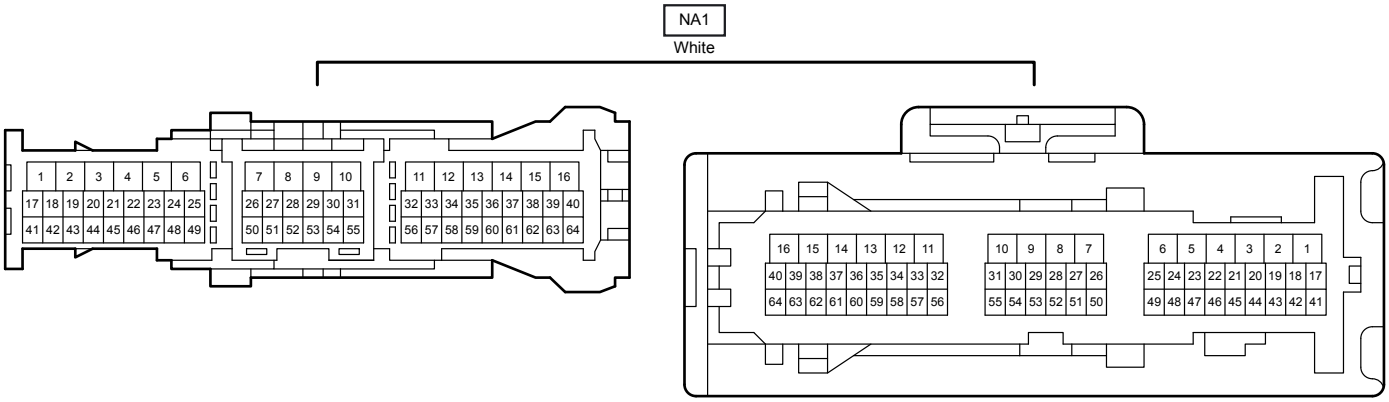
NA1
White
1 2 3 4 5 6 7 8 9 10 11 12 13 14 15 16
17 18 19 20 21 22 23 24 25 26 27 28 29 30 31 32 33 34 35 36 37 38 39 40
41 42 43 44 45 46 47 48 49 50 51 52 53 54 55 56 57 58 59 60 61 62 63 64
16 15 14 13 12 11 10 9 8 7 6 5 4 3 2 1
40 39 38 37 36 35 34 33 32 31 30 29 28 27 26 25 24 23 22 21 20 19 18 17
64 63 62 61 60 59 58 57 56 55 54 53 52 51 50 49 48 47 46 45 44 43 42 41

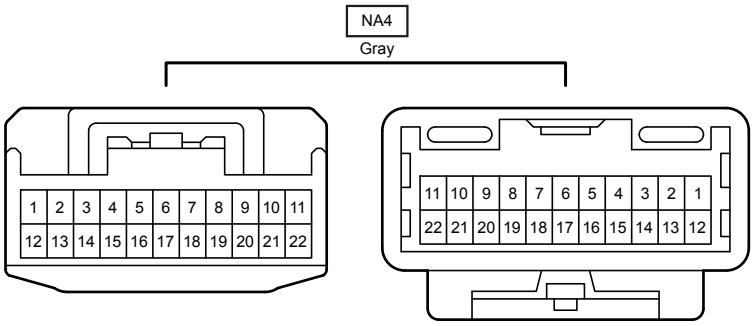
NA4
Gray
1 2 3 4 5 6 7 8 9 10 11
12 13 14 15 16 17 18 19 20 21 22
11 10 9 8 7 6 5 4 3 2 1
22 21 20 19 18 17 16 15 14 13 12