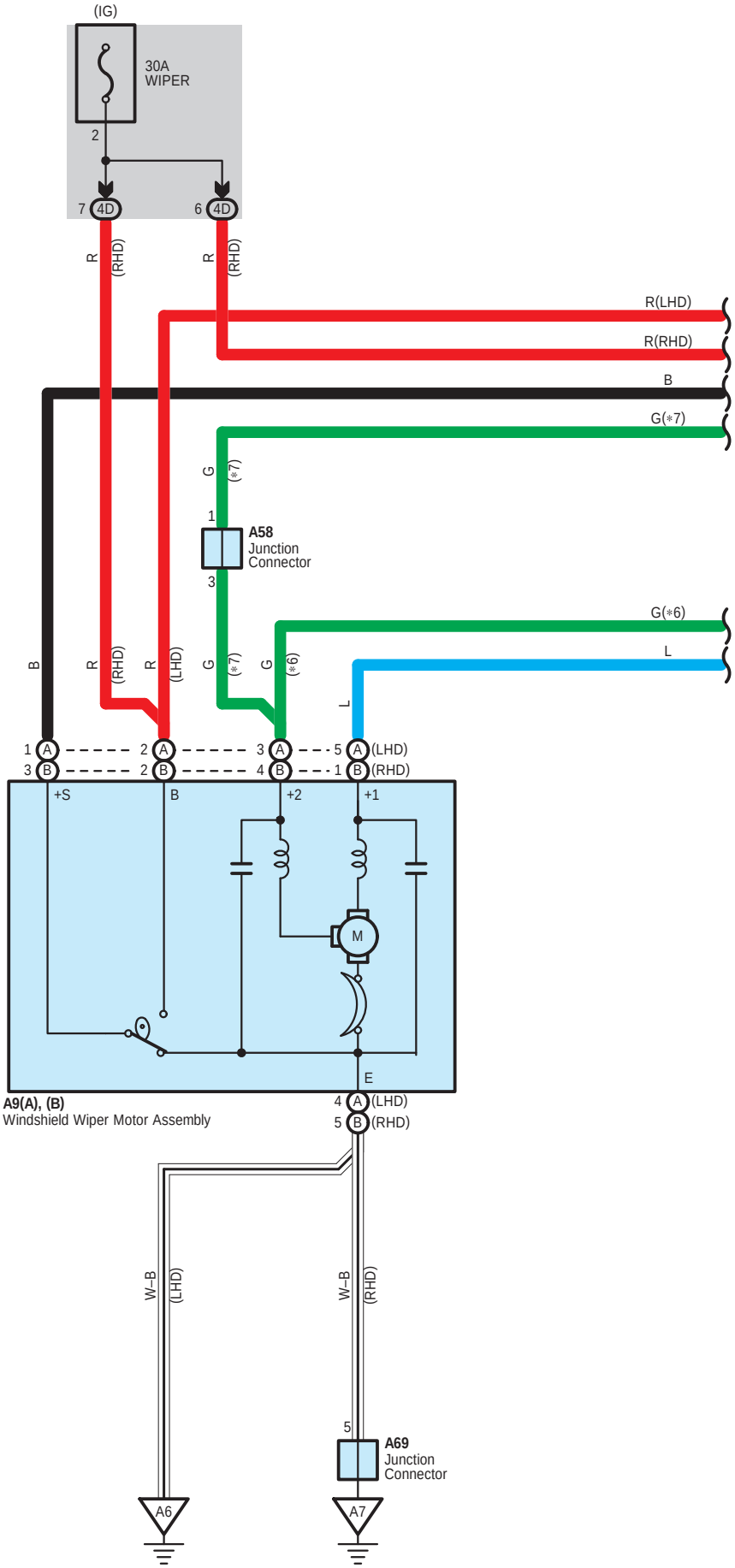
(IG)
30A
WIPER
2
7 4D
6 4D
R (RHD)
R (RHD)
R(LHD)
R(RHD)
B
G(*7)
G (*7)
1
A58
Junction
Connector
3
G(*6)
L
B
R (RHD)
R (LHD)
G (*7)
G (*6)
L
1 A
3 B
2 A
2 B
3 A
4 B
5 A (LHD)
1 B (RHD)
+S
B
+2
+1
M
E
A9(A), (B)
Windshield Wiper Motor Assembly
4 A (LHD)
5 B (RHD)
W–B (LHD)
W–B (RHD)
5
A69
Junction
Connector
A6
A7

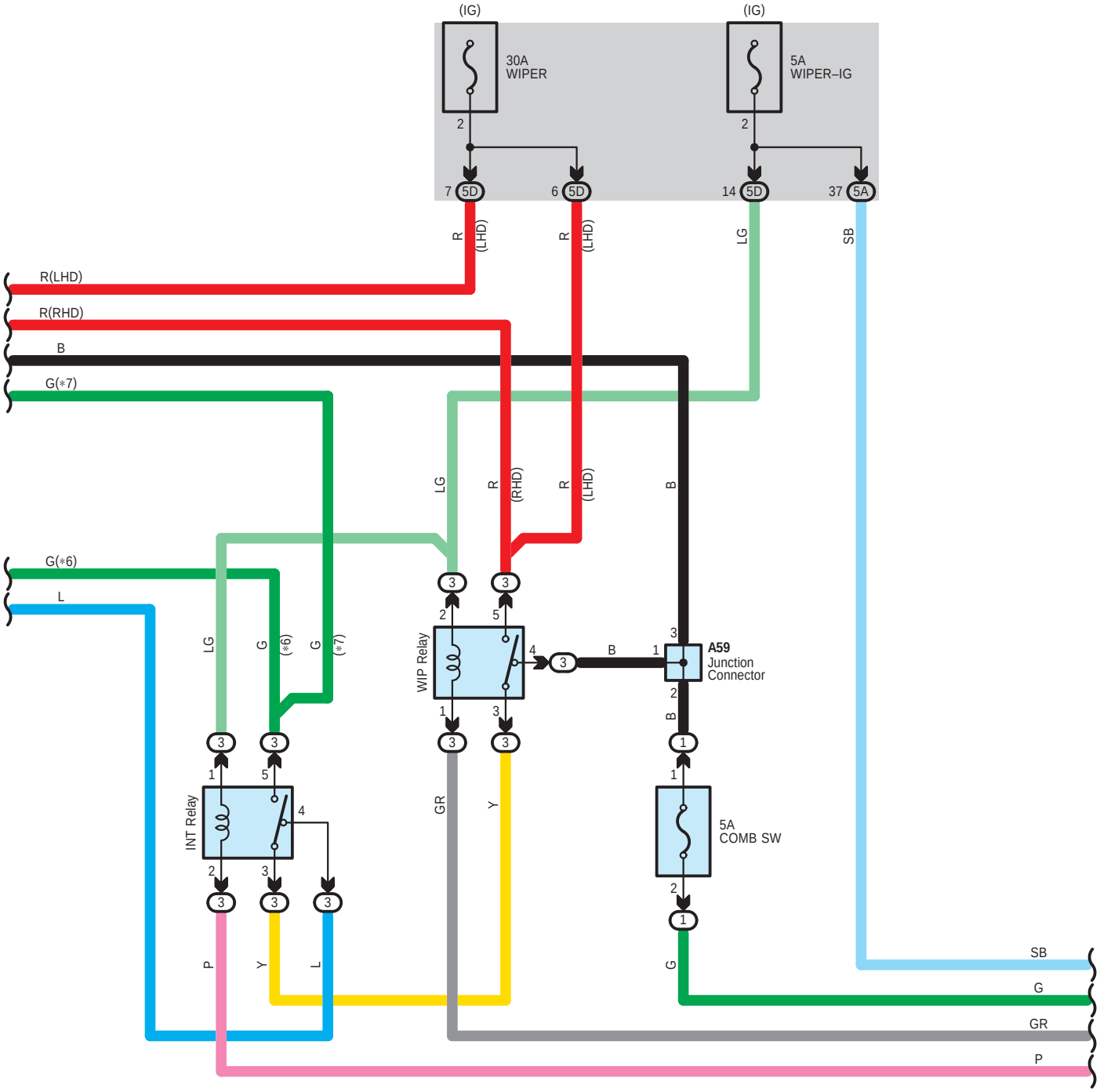

* 6 : w/o Adaptive Variable Suspension
* 7 : w/ Adaptive Variable Suspension

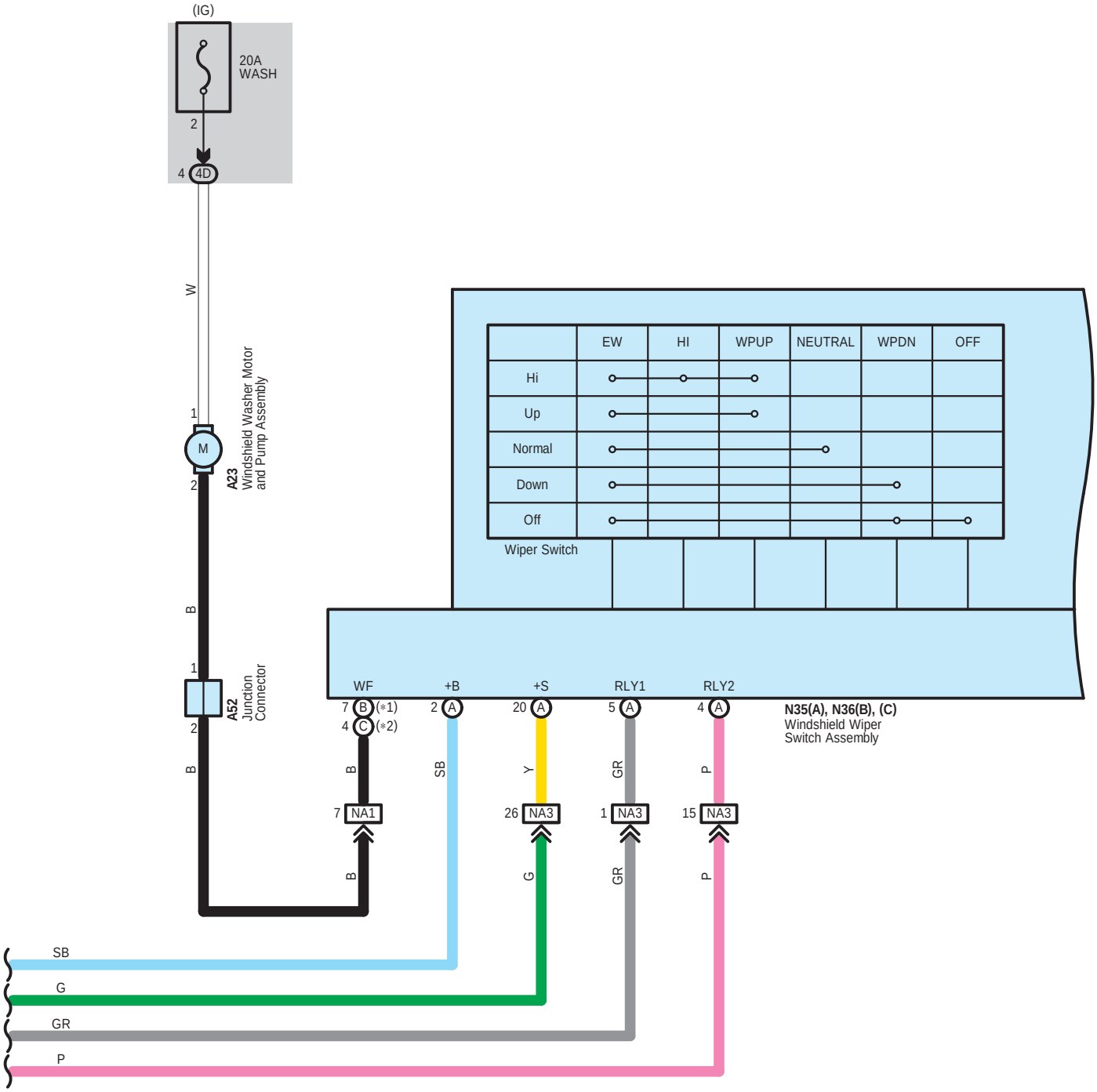
(IG)
20A
WASH
2
4
4D
W
1
M
2
A23
Windshield Washer Motor
and Pump Assembly
B
1
2
A52
Junction
Connector
B
EW
HI
WPUP
NEUTRAL
WPDN
OFF
Hi
Up
Normal
Down
Off
Wiper Switch
WF
+B
+S
RLY1
RLY2
7 B (*1)
4 C (*2)
2 A
20 A
5 A
4 A
N35(A), N36(B), (C)
Windshield Wiper
Switch Assembly
B
SB
Y
GR
P
7 NA1
26 NA3
1 NA3
15 NA3
B
G
GR
P
SB
G
GR
P

∗ 1 : LHD, RHD Light Control Switch LH Side Type
∗ 2 : RHD Light Control Switch RH Side Type
∗ 3 : w/ Auto Wiper System
∗ 4 : w/o Auto Wiper System

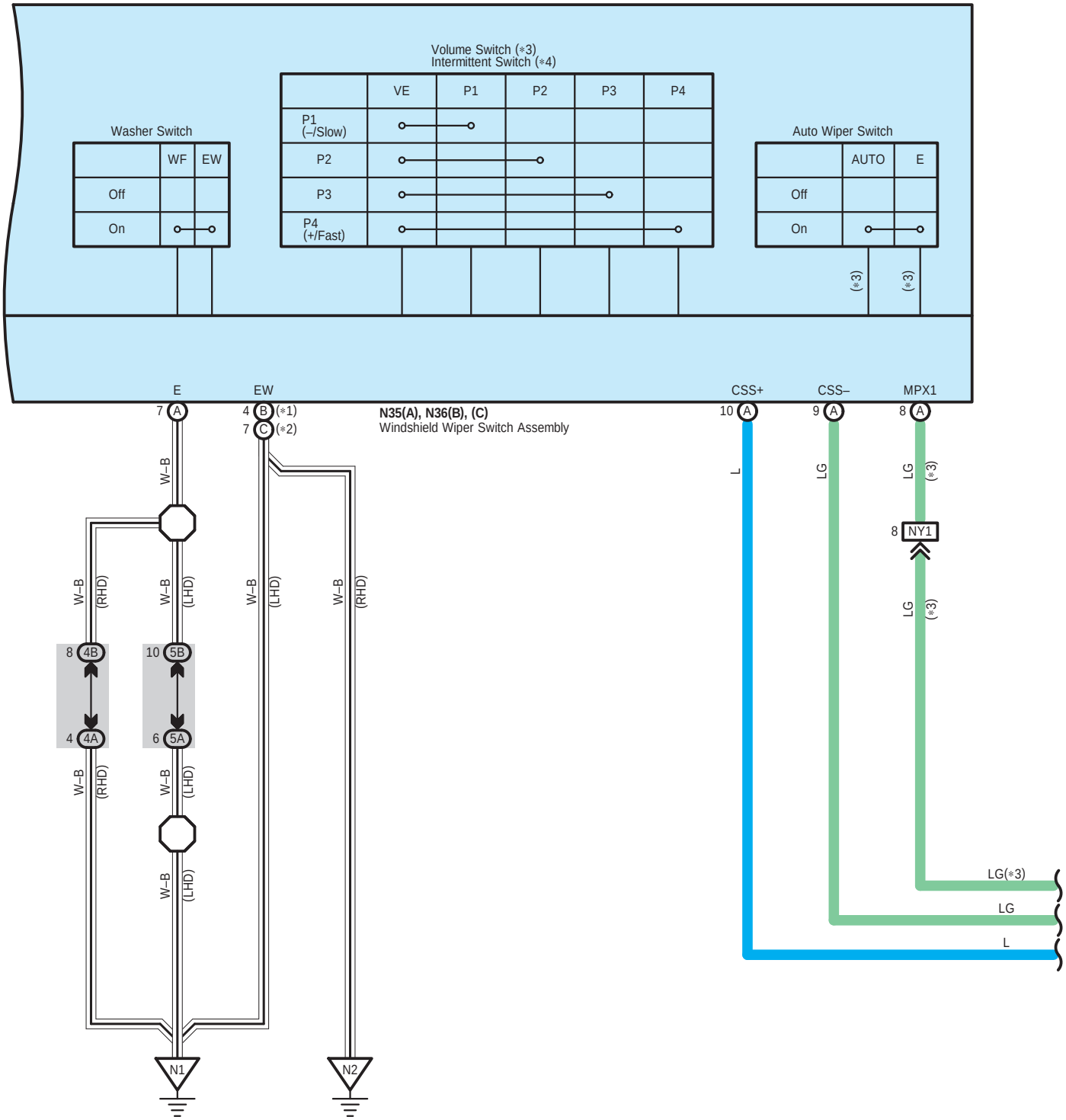

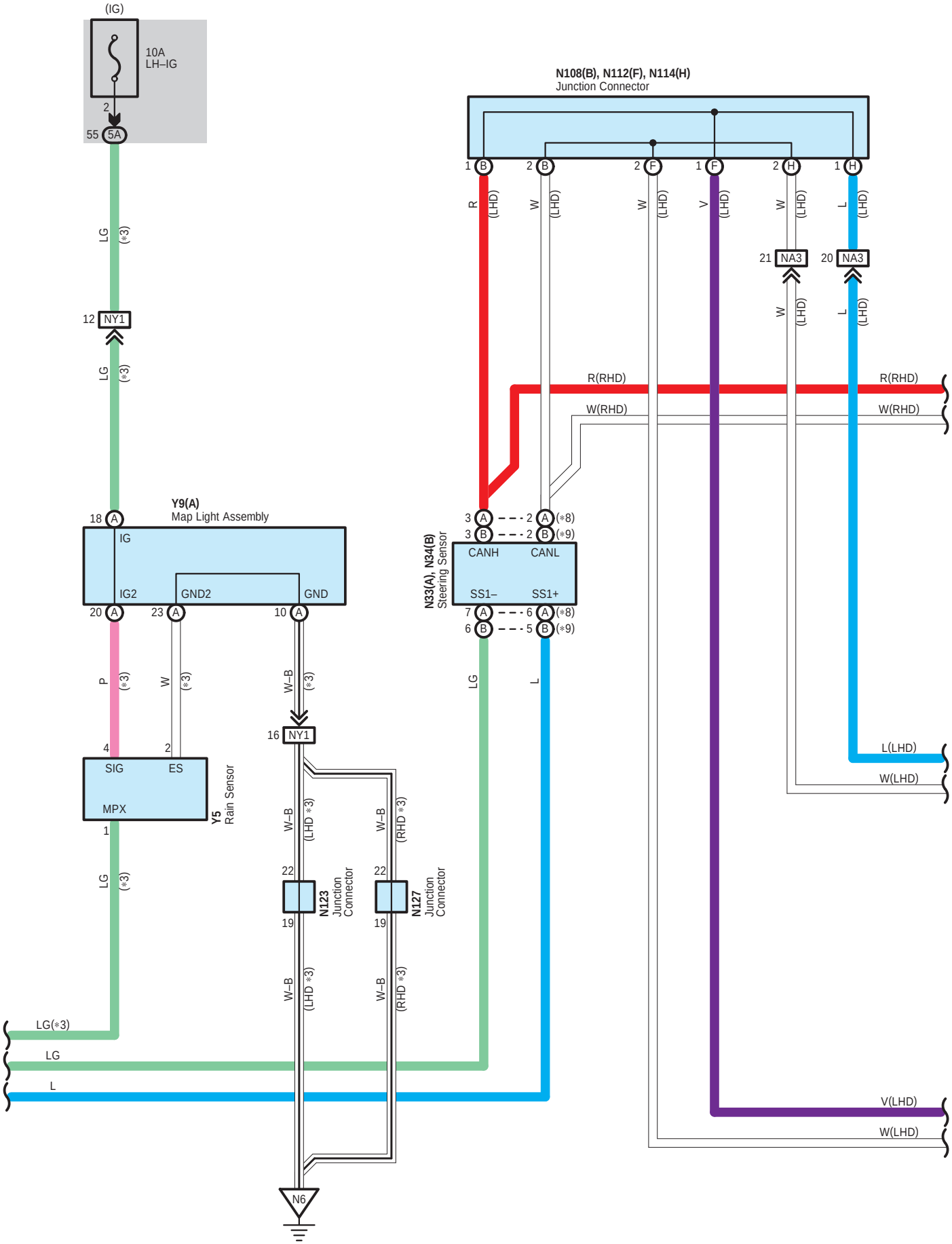
(IG)
10A
LH–IG
2
55 5A
LG (*3)
12 NY1
LG (*3)
Y9(A)
Map Light Assembly
18 A
IG
IG2
GND2
GND
20 A
23 A
10 A
P (*3)
W (*3)
W–B (*3)
16 NY1
4
2
SIG
ES
MPX
Y5
Rain Sensor
1
LG (*3)
W–B (LHD *3)
W–B (RHD *3)
22
19
N123
Junction
Connector
N127
Junction
Connector
W–B (LHD *3)
W–B (RHD *3)
N6
LG(*3)
LG
L
N108(B), N112(F), N114(H)
Junction Connector
1 B
2 B
2 F
1 F
2 H
1 H
R (LHD)
W (LHD)
W (LHD)
V (LHD)
W (LHD)
L (LHD)
21 NA3
20 NA3
W (LHD)
L (LHD)
R(RHD)
W(RHD)
R(RHD)
W(RHD)
3 A
3 B
2 A (*8)
2 B (*9)
N33(A), N34(B)
Steering Sensor
CANH
CANL
SS1–
SS1+
7 A
6 B
6 A (*8)
5 B (*9)
LG
L
L(LHD)
W(LHD)
V(LHD)
W(LHD)

* 3 : w/ Auto Wiper System
* 8 : w/ DRS and VGRS
* 9 : w/o DRS and VGRS

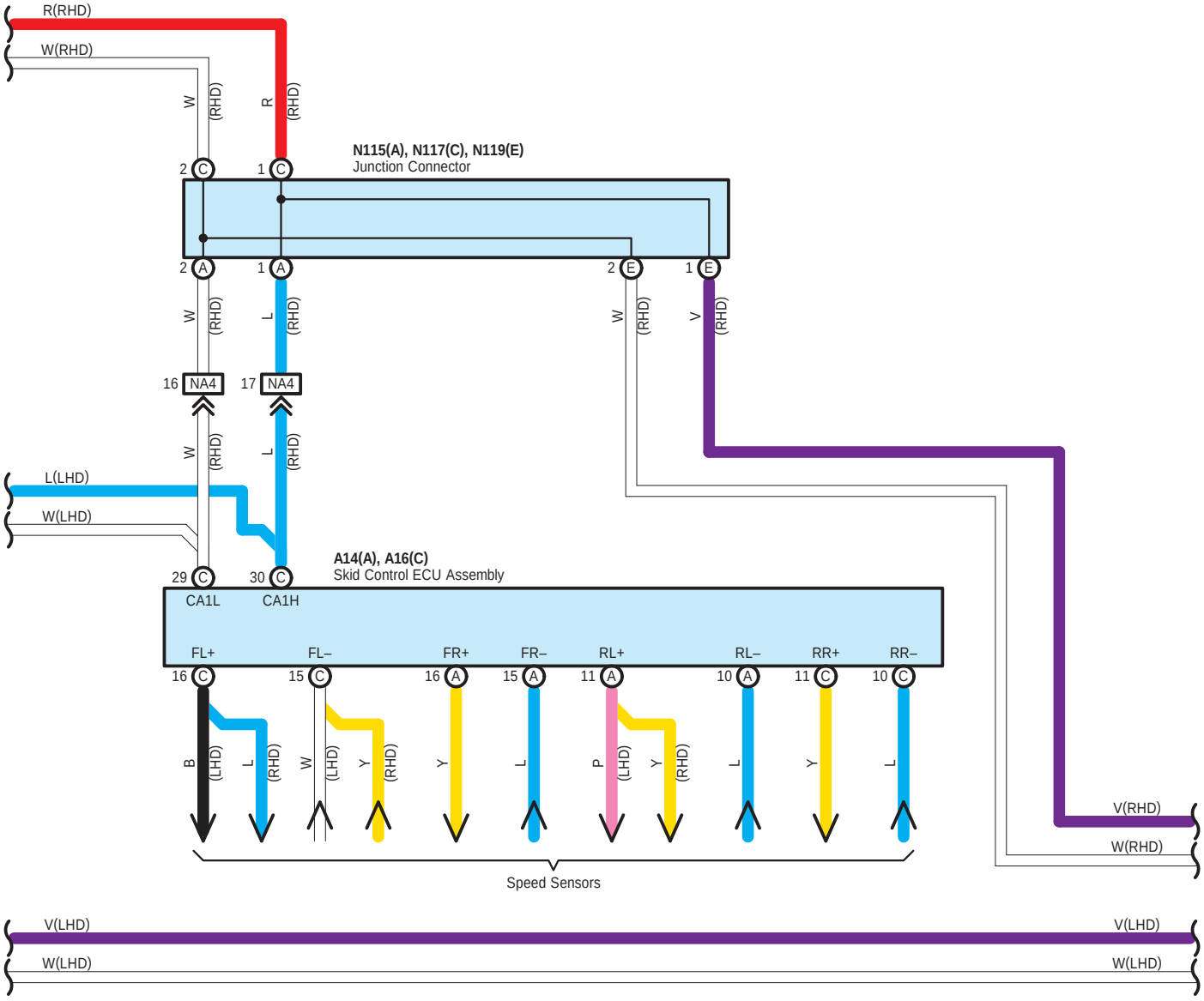

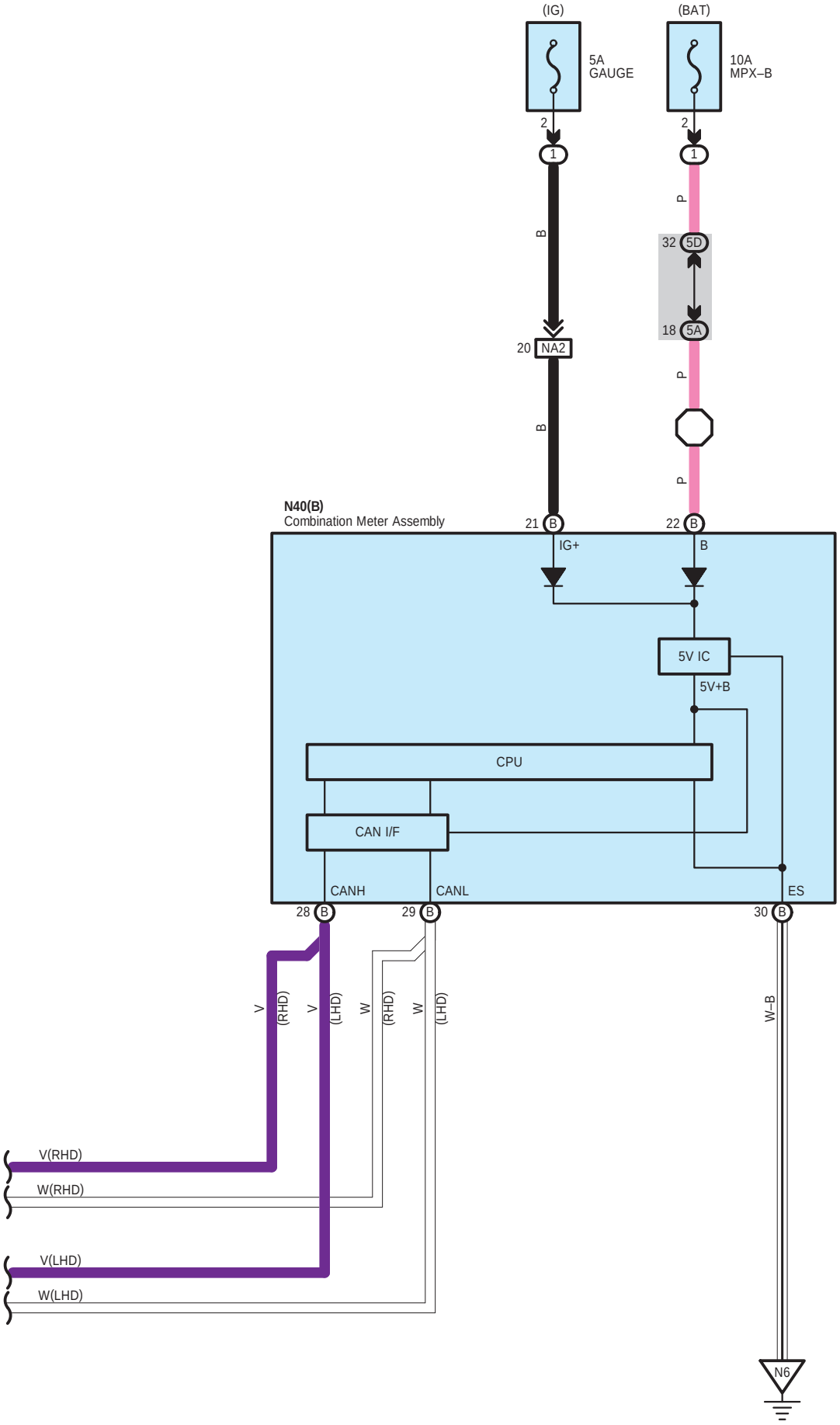
(IG)
(BAT)
5A
GAUGE
10A
MPX–B
2
1
B
P
32 5D
18 5A
20 NA2
N40(B)
Combination Meter Assembly
21 B
22 B
IG+
B
5V IC
5V+B
CPU
CAN I/F
CANH
CANL
ES
28 B
29 B
30 B
V (RHD)
V (LHD)
W (RHD)
W (LHD)
W–B
V(RHD)
W(RHD)
V(LHD)
W(LHD)
N6

A 9
Black

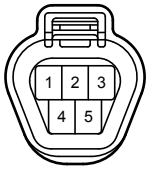

A 14
Black

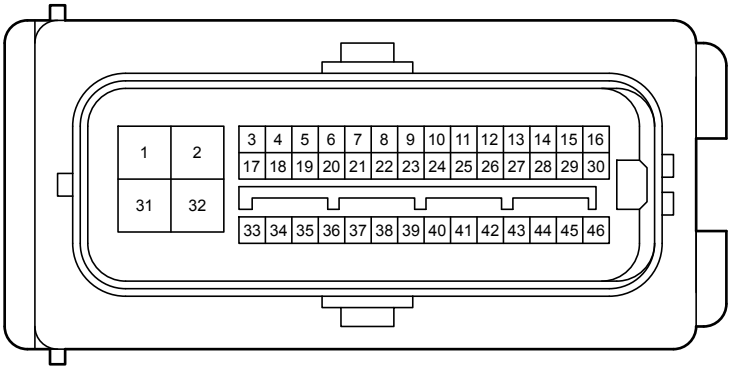

A 16
Gray

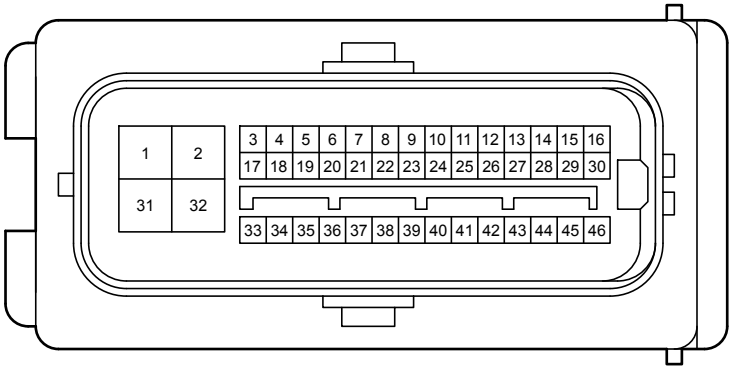

A 23
Black

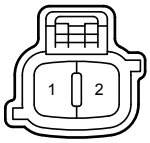

A 52
Black

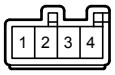

A 58
Black

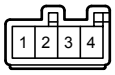

A 59
Black

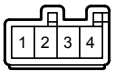

A 69
Gray

N 33
White

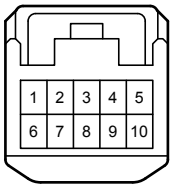

N 34
Black

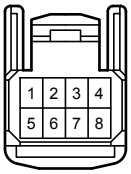

N 35
White

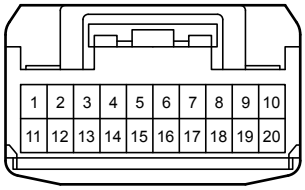

N 36
White

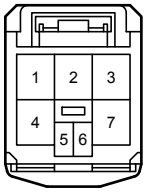

N 40
Black

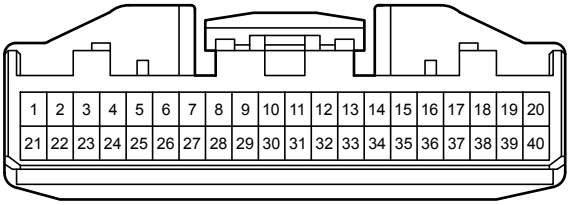

N108
White

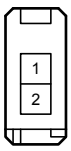

N112
White

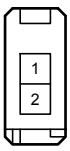

N114
White

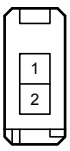

N115
White

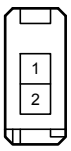

N117
White

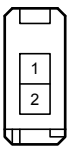

N119
White

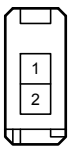

N123
Blue

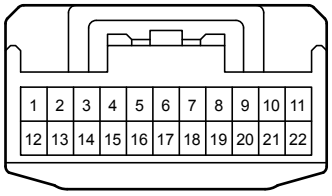

N127
Blue

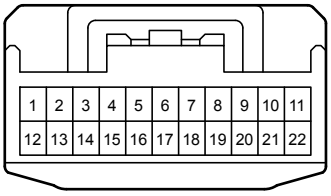

Y 5
Black

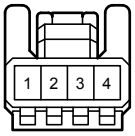

Y 9
White

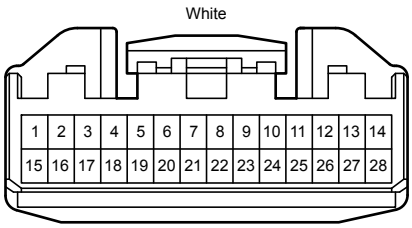

4A
White

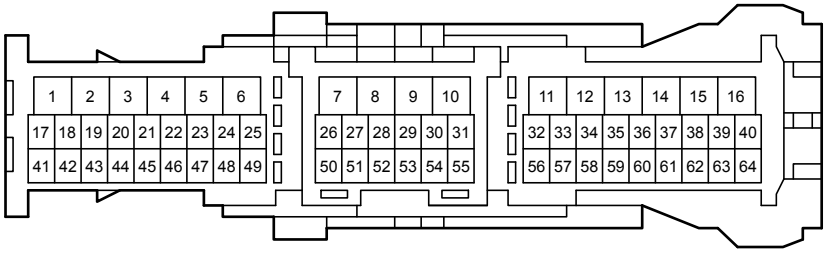

4B
White

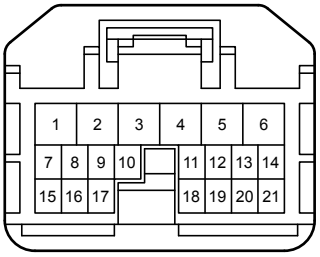

4D
White

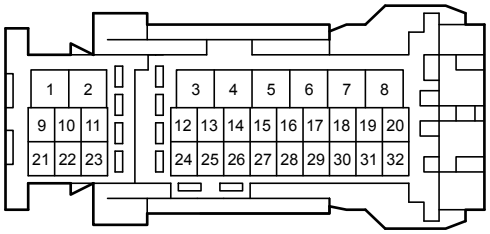

5A
White

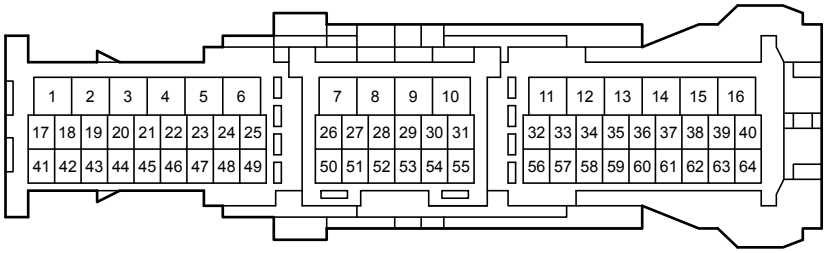

5B
White

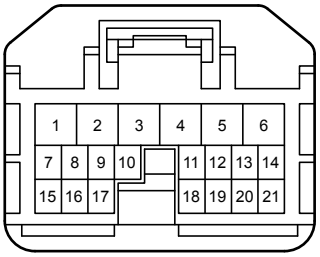

5D
White

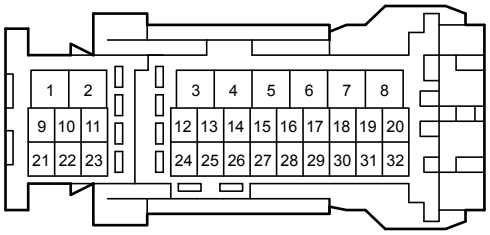

NA1
White

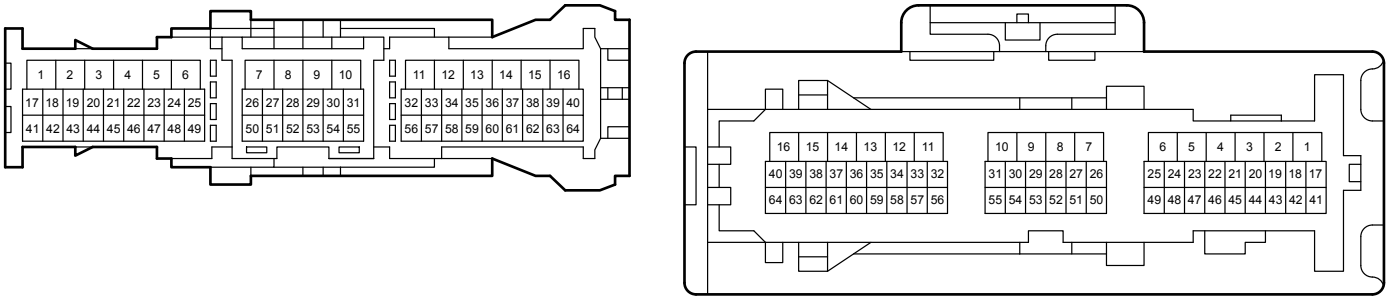

NA2
White

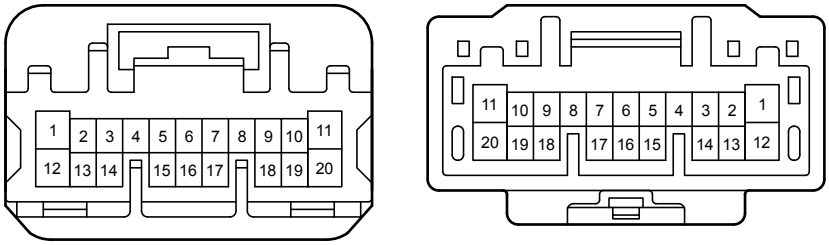

NA3
White

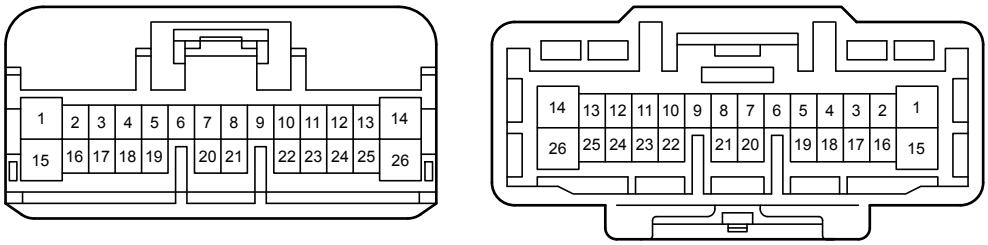

NA4
Gray

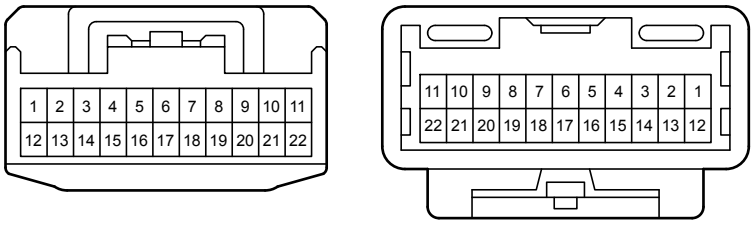

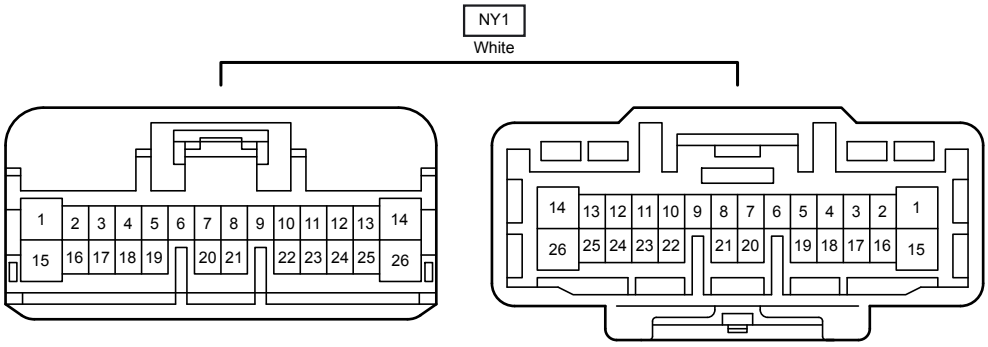
NY1
White
1
2
3
4
5
6
7
8
9
10
11
12
13
14
15
16
17
18
19
20
21
22
23
24
25
26
14
13
12
11
10
9
8
7
6
5
4
3
2
1
26
25
24
23
22
21
20
19
18
17
16
15