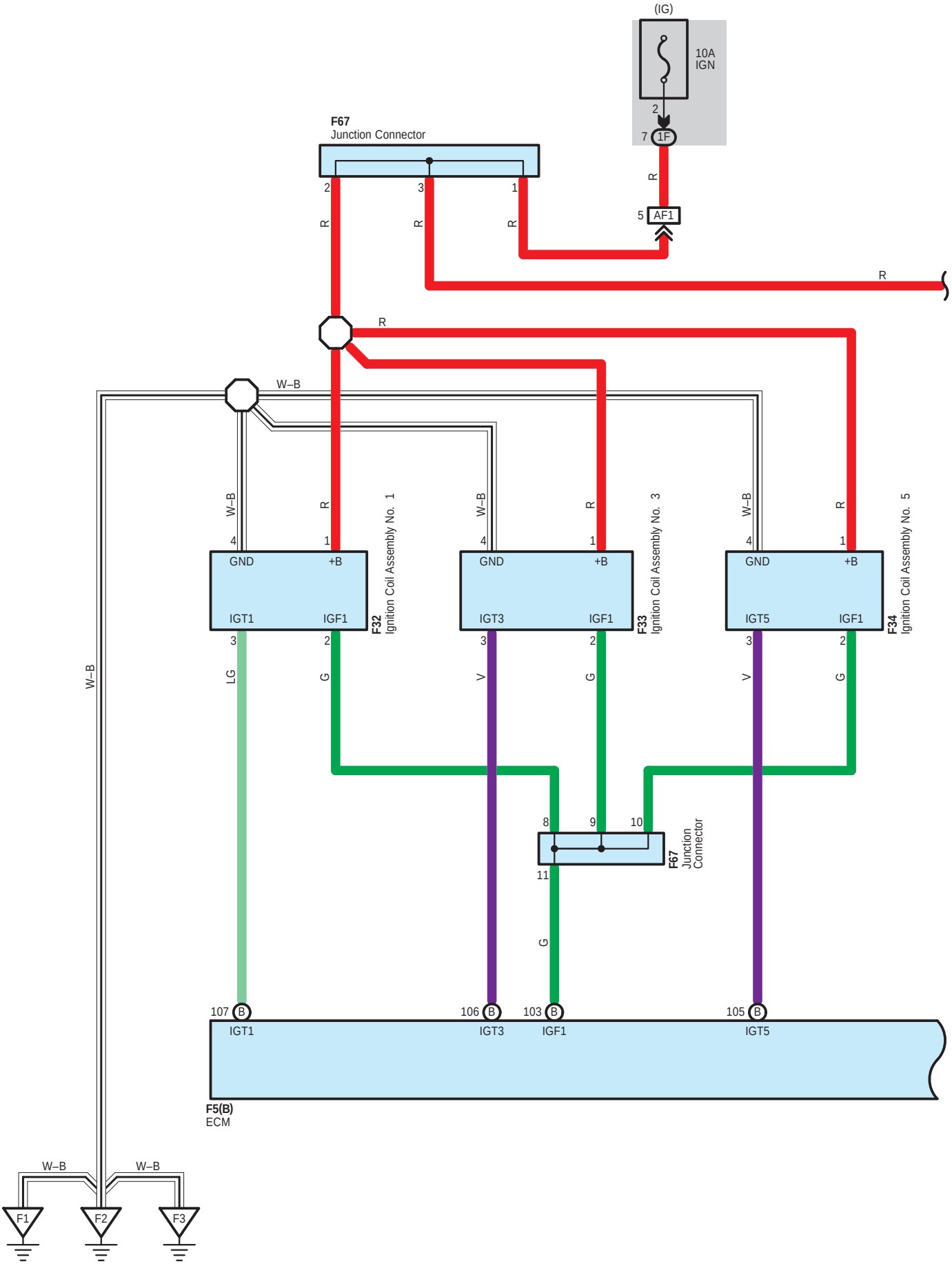
(IG)
10A
IGN
2
7
1F
F67
Junction Connector
2
3
1
R
R
R
R
5
AF1
R
R
W–B
W–B
W–B
4
1
GND
+B
IGT1
IGF1
F32
Ignition Coil Assembly No. 1
4
1
GND
+B
IGT3
IGF1
F33
Ignition Coil Assembly No. 3
4
1
GND
+B
IGT5
IGF1
F34
Ignition Coil Assembly No. 5
3
2
LG
G
3
2
V
G
3
2
V
G
W–B
8
9
10
11
F67
Junction
Connector
G
107
B
IGT1
106
B
IGT3
103
B
IGF1
105
B
IGT5
F5(B)
ECM
W–B
W–B
F1
F2
F3

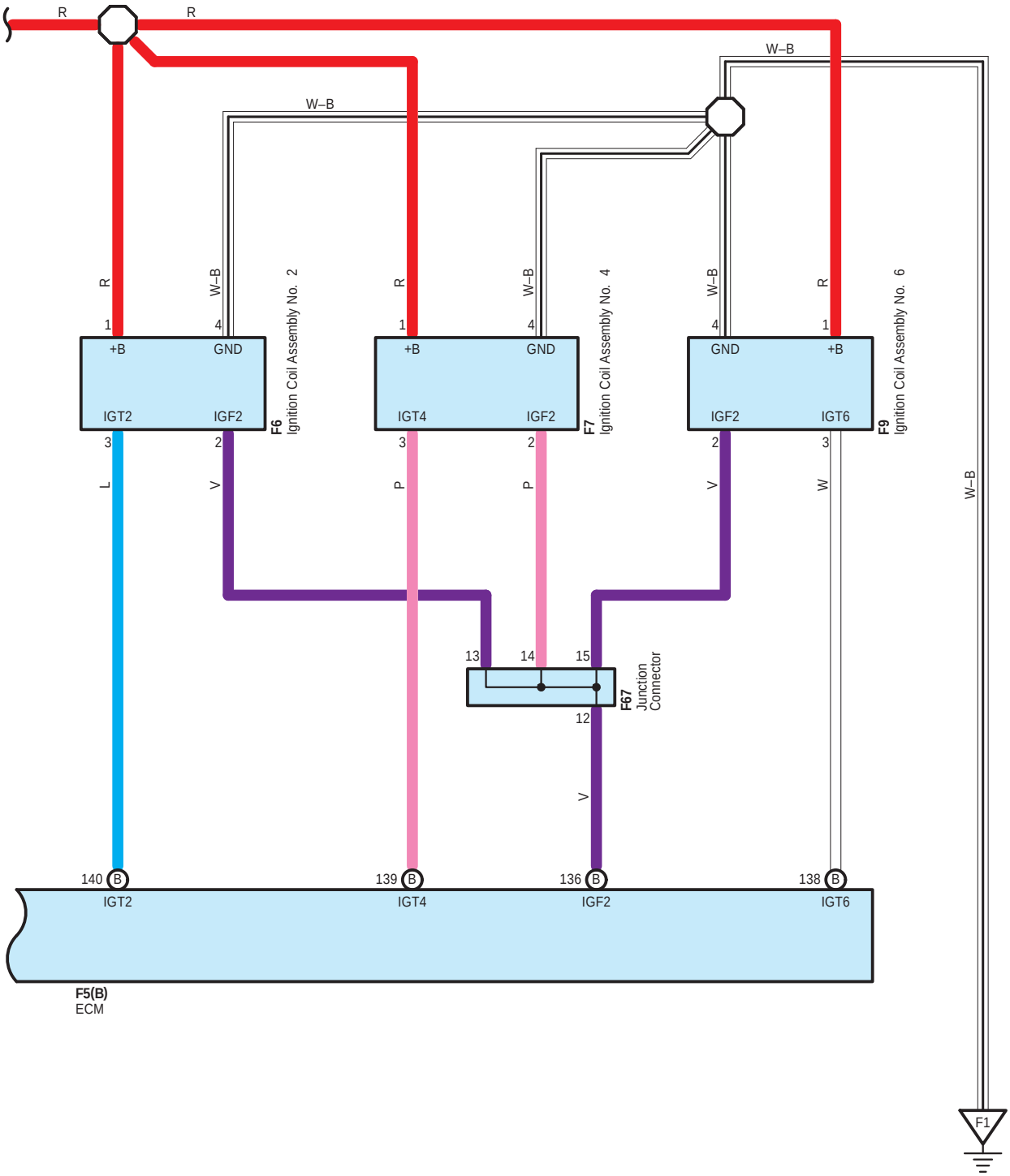
R
R
W–B
W–B
R
W–B
1
4
+B
GND
IGT2
IGF2
3
2
F6
Ignition Coil Assembly No. 2
R
W–B
1
4
+B
GND
IGT4
IGF2
3
2
F7
Ignition Coil Assembly No. 4
W–B
R
4
1
GND
+B
IGF2
IGT6
2
3
F9
Ignition Coil Assembly No. 6
L
V
P
P
V
W
W–B
13
14
15
12
F67
Junction
Connector
V
140
B
IGT2
139
B
IGT4
136
B
IGF2
138
B
IGT6
F5(B)
ECM
F1

F 5
Black

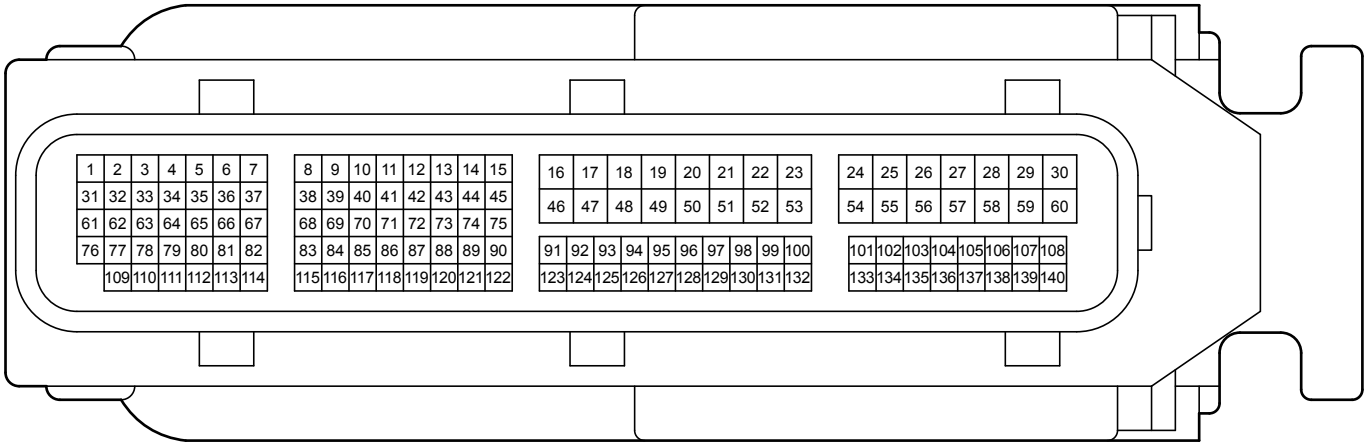

F 6
Gray

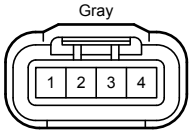

F 7
Black

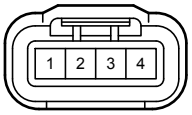

F 9
Gray

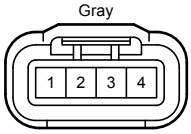

F 32
Gray

F 33
Black

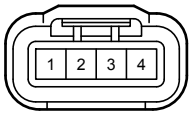

F 34
Gray

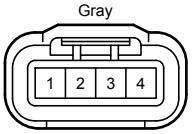

F 67
White

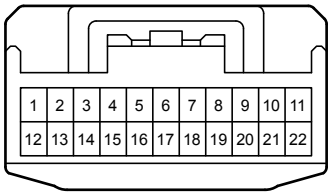

1F
White

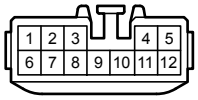
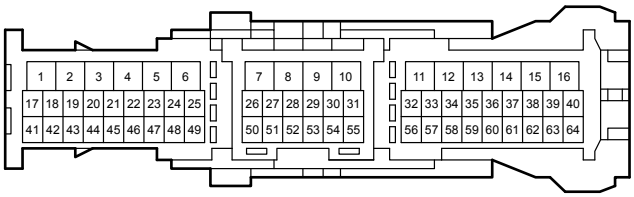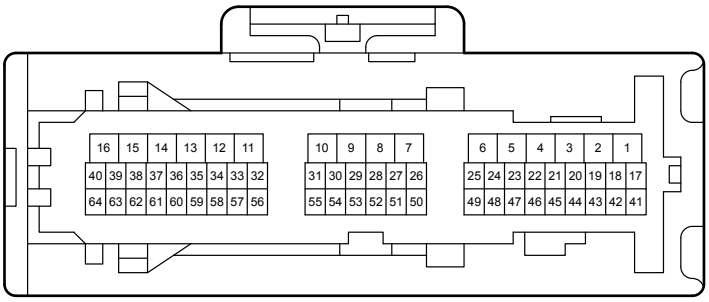
AF1
White