Power Source <Before Oct. 2015 Production>

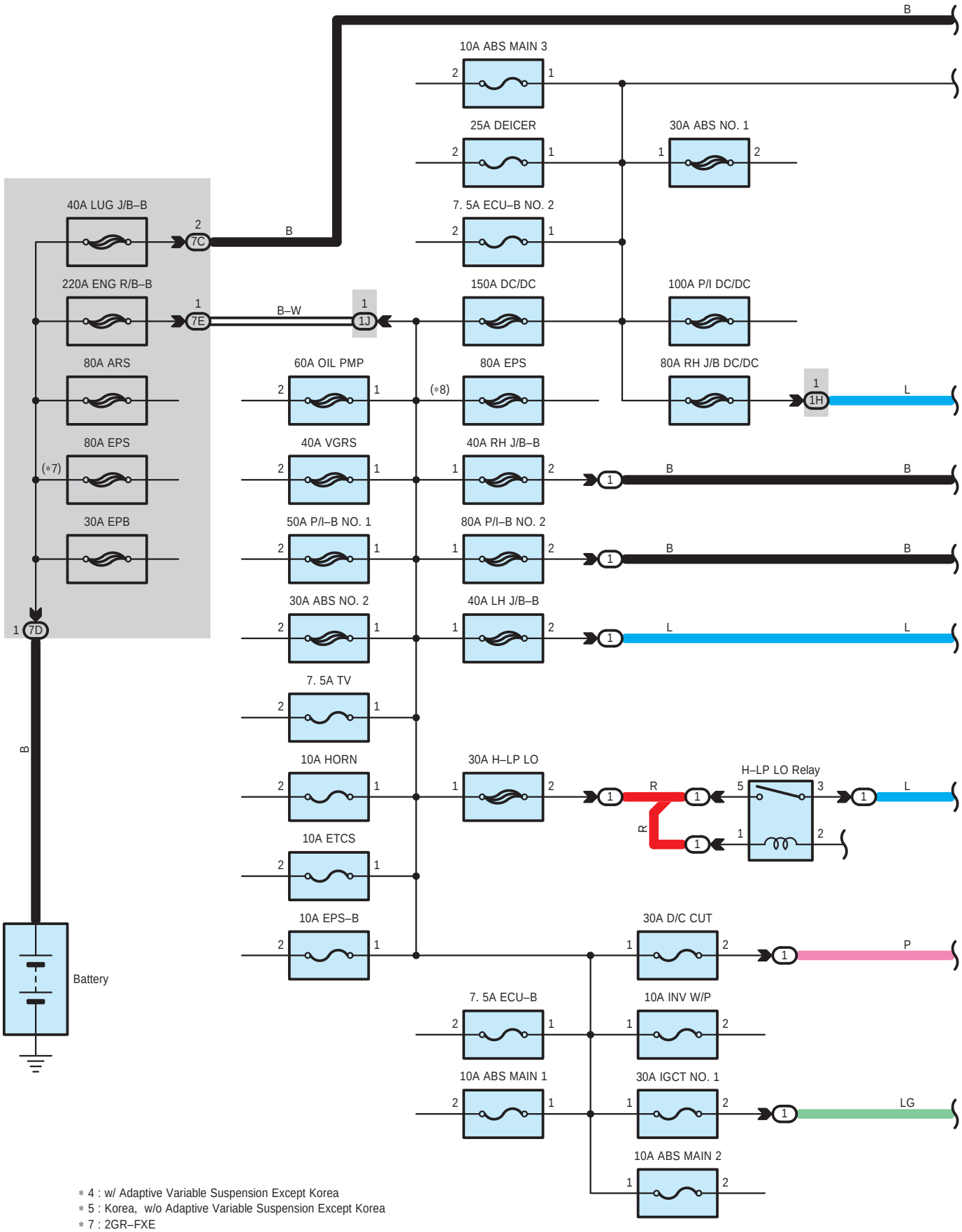

* 4 : w/ Adaptive Variable Suspension Except Korea
* 5 : Korea, w/o Adaptive Variable Suspension Except Korea
* 7 : 2GR–FXE
* 8 : 2AR–FSE

Power Source <Before Oct. 2015 Production>

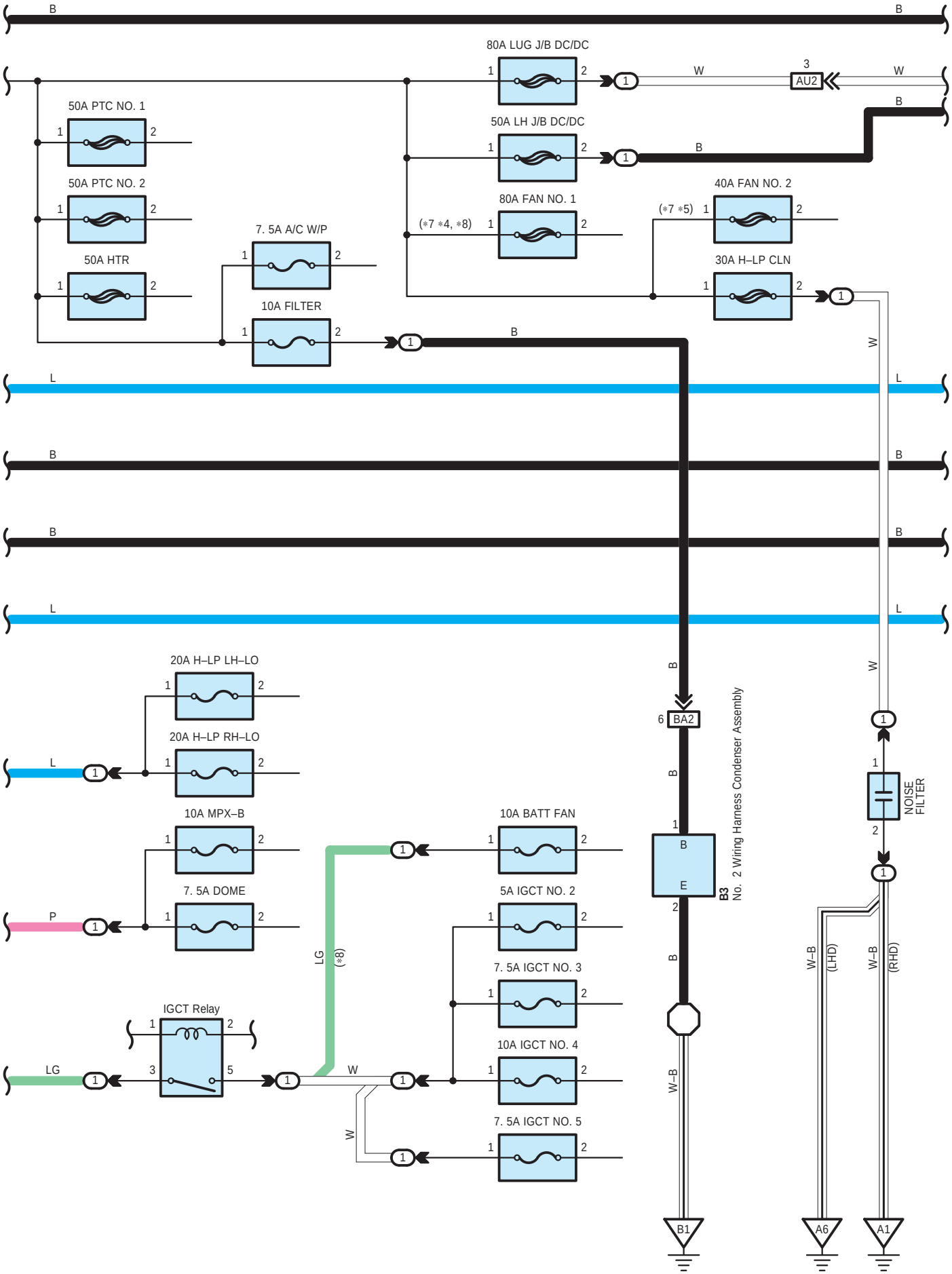

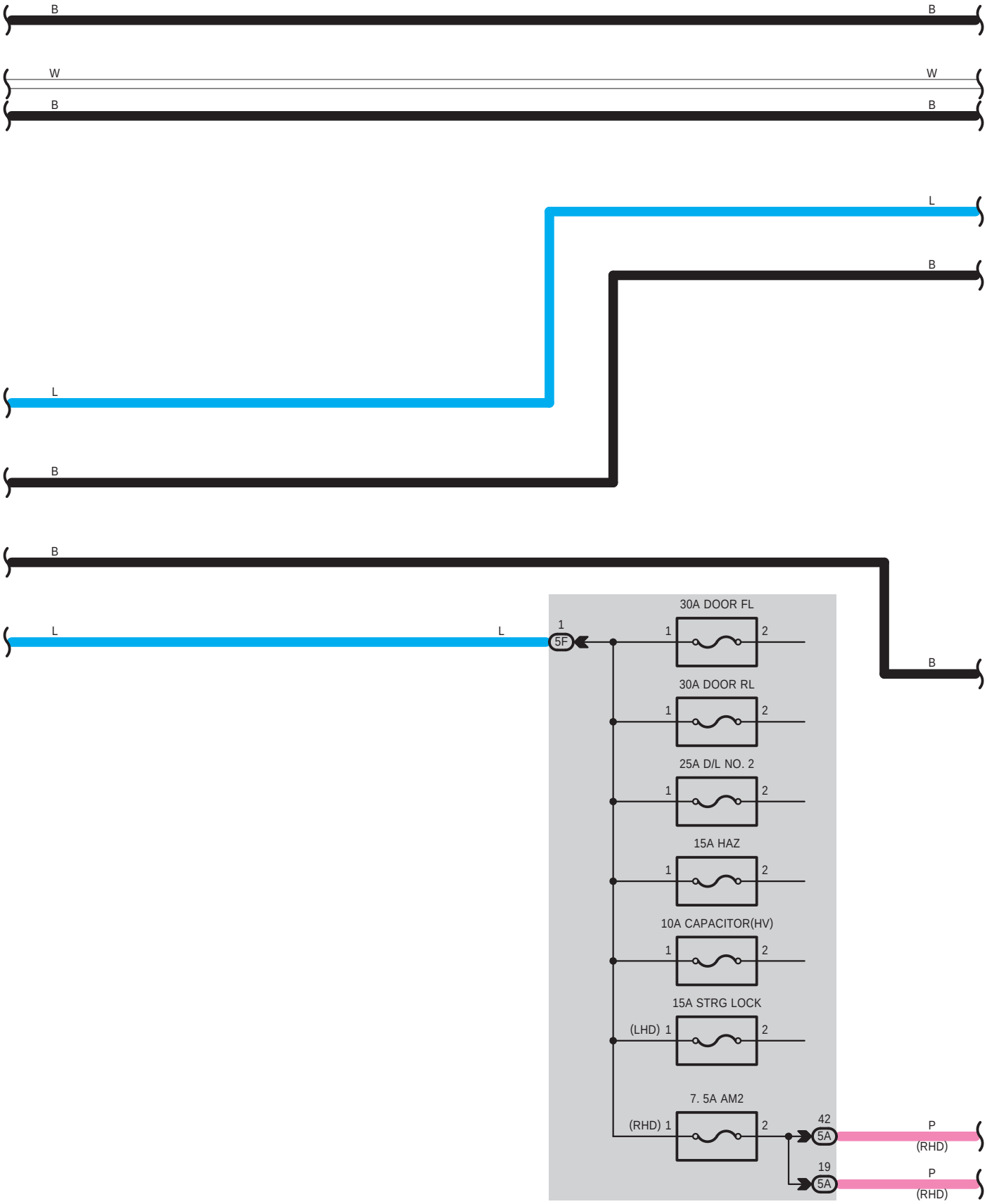
B
B
W
W
B
B
L
B
L
B
B
L
L
1
5F
30A DOOR FL
1
2
30A DOOR RL
1
2
25A D/L NO. 2
1
2
15A HAZ
1
2
10A CAPACITOR(HV)
1
2
15A STRG LOCK
(LHD) 1
2
7. 5A AM2
(RHD) 1
2
42
5A
P
(RHD)
19
5A
P
(RHD)
B

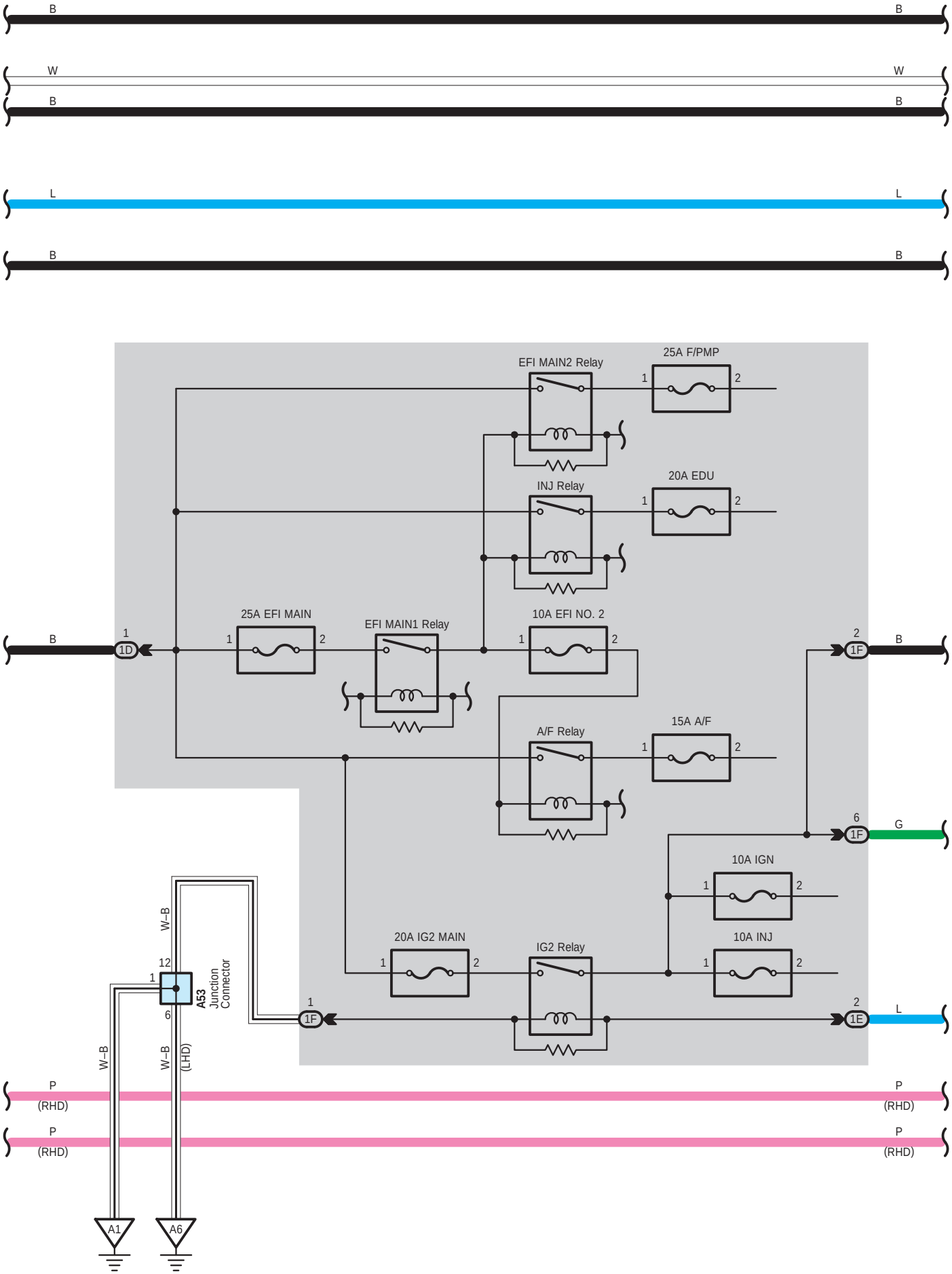
B
B
W
W
B
B
L
L
B
B
EFI MAIN2 Relay
25A F/PMP
INJ Relay
20A EDU
25A EFI MAIN
EFI MAIN1 Relay
10A EFI NO. 2
A/F Relay
15A A/F
10A IGN
20A IG2 MAIN
IG2 Relay
10A INJ
1D
1F
1E
G
L
W–B
A53
Junction Connector
(LHD)
P
(RHD)
A1
A6

Power Source <Before Oct. 2015 Production>

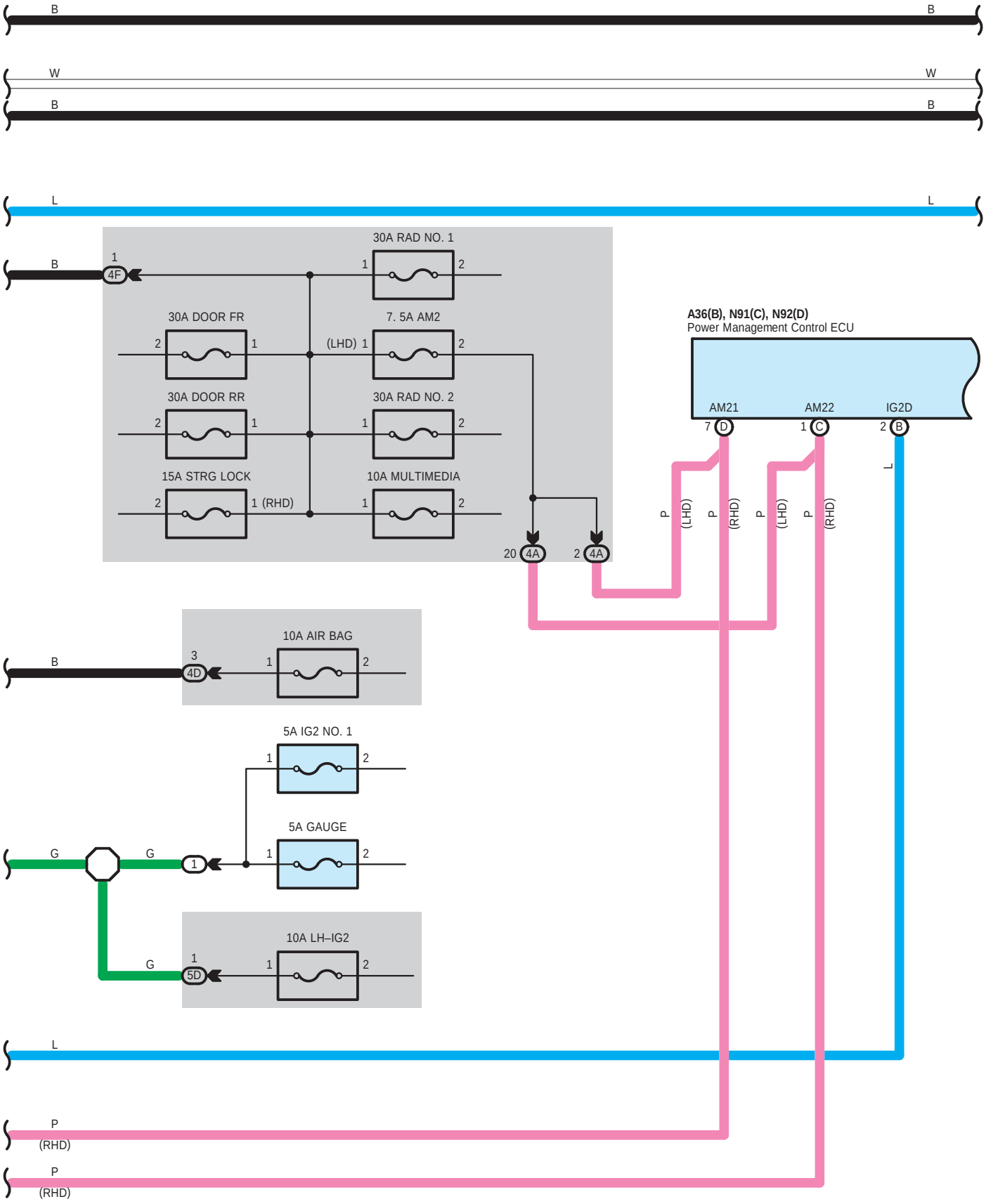

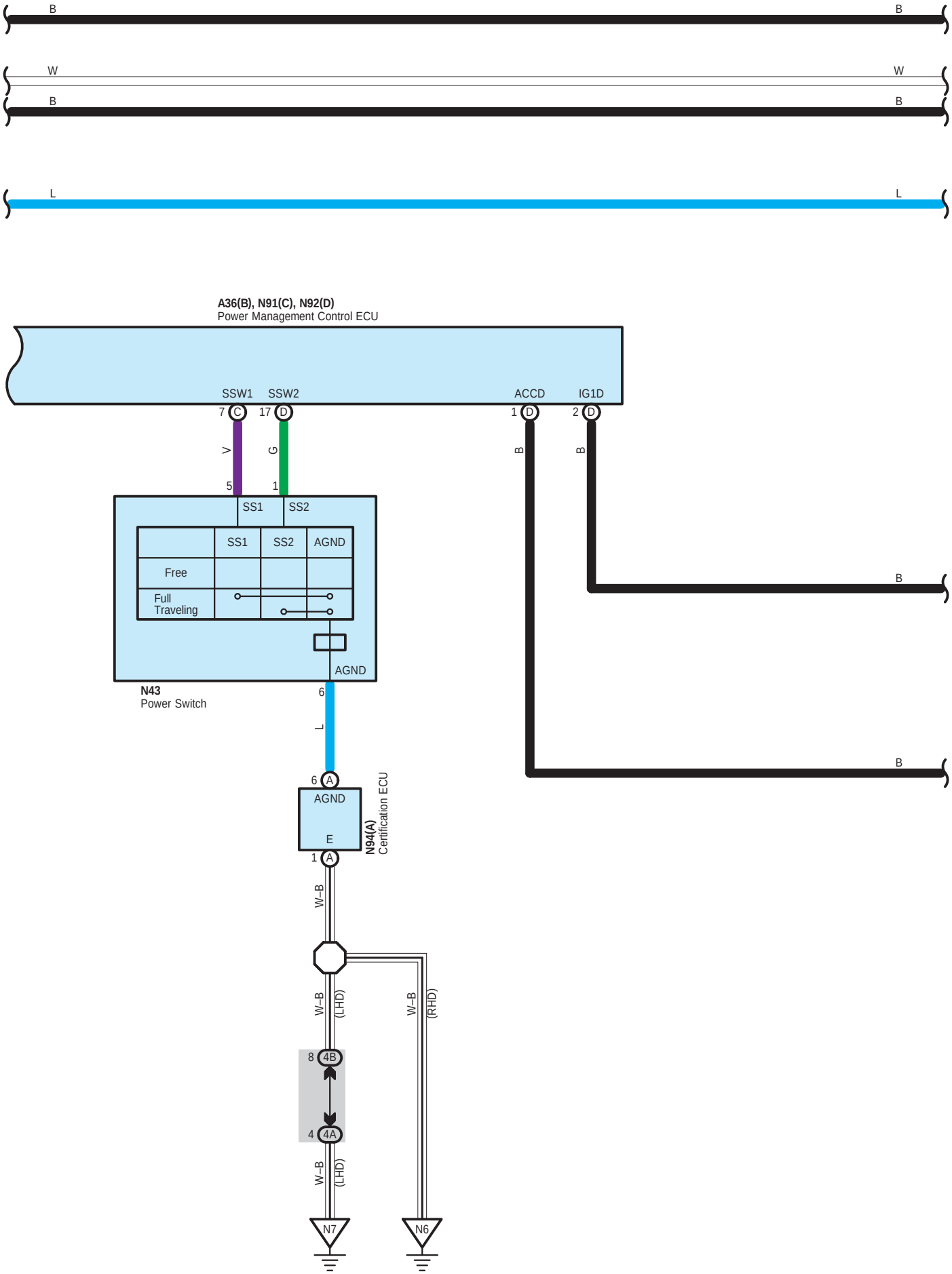
B
B
W
W
B
B
L
L
A36(B), N91(C), N92(D)
Power Management Control ECU
SSW1
SSW2
ACCD
IG1D
7 C
17 D
1 D
2 D
V
G
B
B
5
1
SS1
SS2
SS1
SS2
AGND
Free
Full Traveling
AGND
N43
Power Switch
6
L
B
B
6 A
AGND
E
1 A
N94(A)
Certification ECU
W–B
W–B
(LHD)
W–B
(RHD)
8 4B
4 4A
W–B
(LHD)
N7
N6

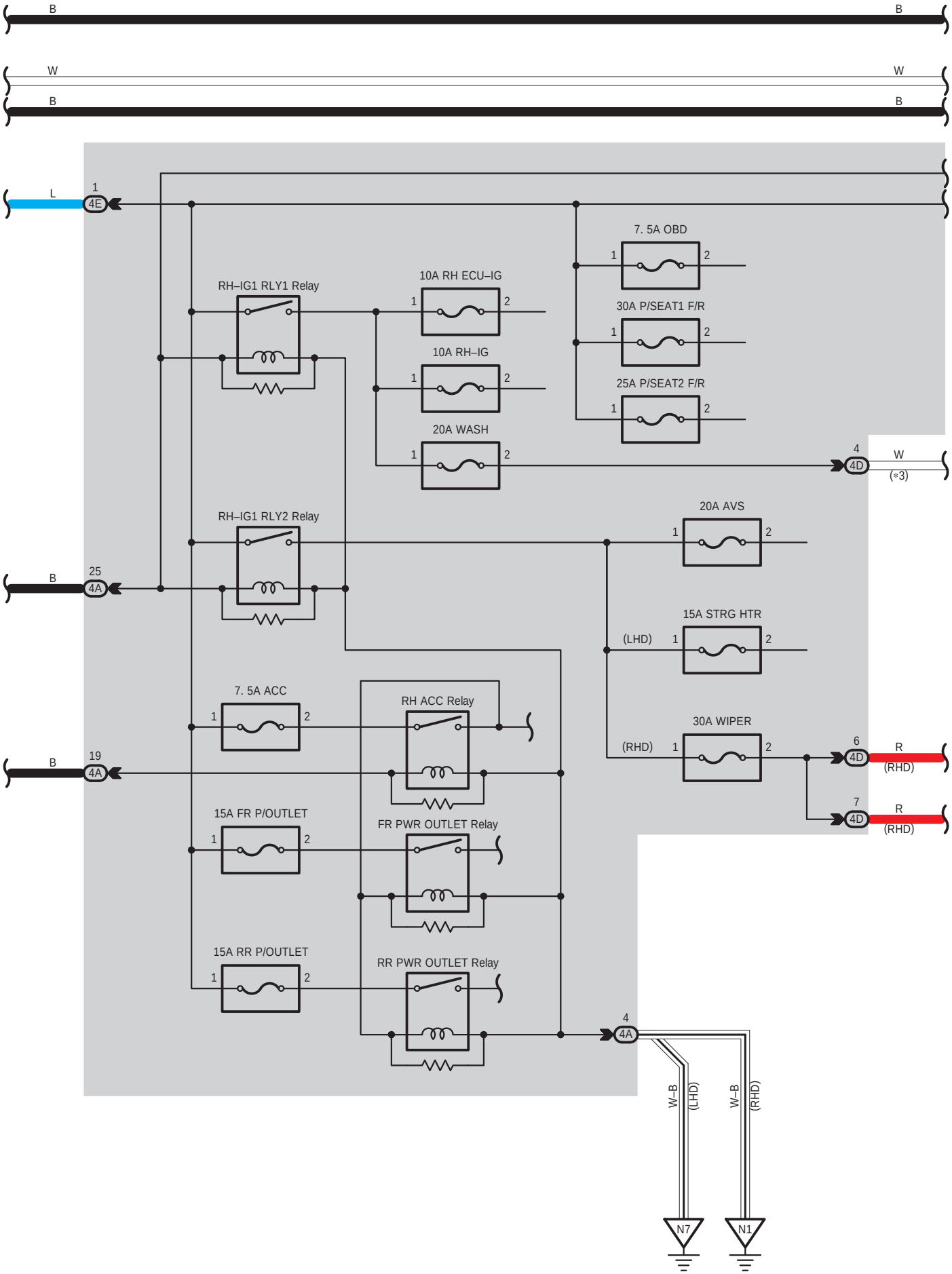
B
B
W
W
B
B
L
1
4E
7. 5A OBD
RH–IG1 RLY1 Relay
10A RH ECU–IG
30A P/SEAT1 F/R
10A RH–IG
25A P/SEAT2 F/R
20A WASH
4
4D
W
(*3)
RH–IG1 RLY2 Relay
20A AVS
B
25
4A
15A STRG HTR
(LHD)
7. 5A ACC
RH ACC Relay
30A WIPER
(RHD)
6
4D
R
(RHD)
B
19
4A
7
4D
R
(RHD)
15A FR P/OUTLET
FR PWR OUTLET Relay
15A RR P/OUTLET
RR PWR OUTLET Relay
4
4A
W–B
(LHD)
W–B
(RHD)
N7
N1

Power Source <Before Oct. 2015 Production>

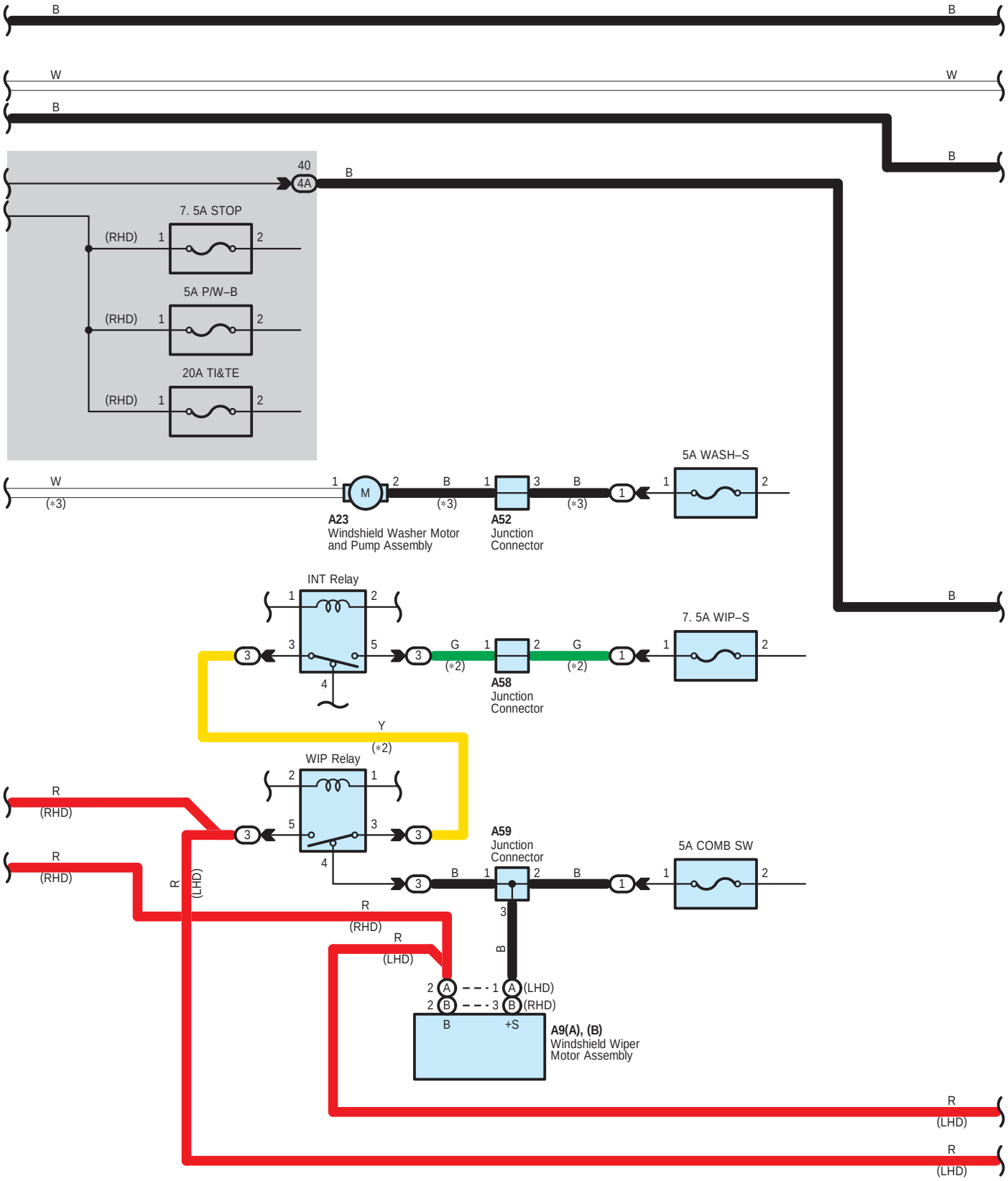

∗ 2 : w/ Dynamic Radar Cruise Control
∗ 3 : w/ Lane Keeping Assist

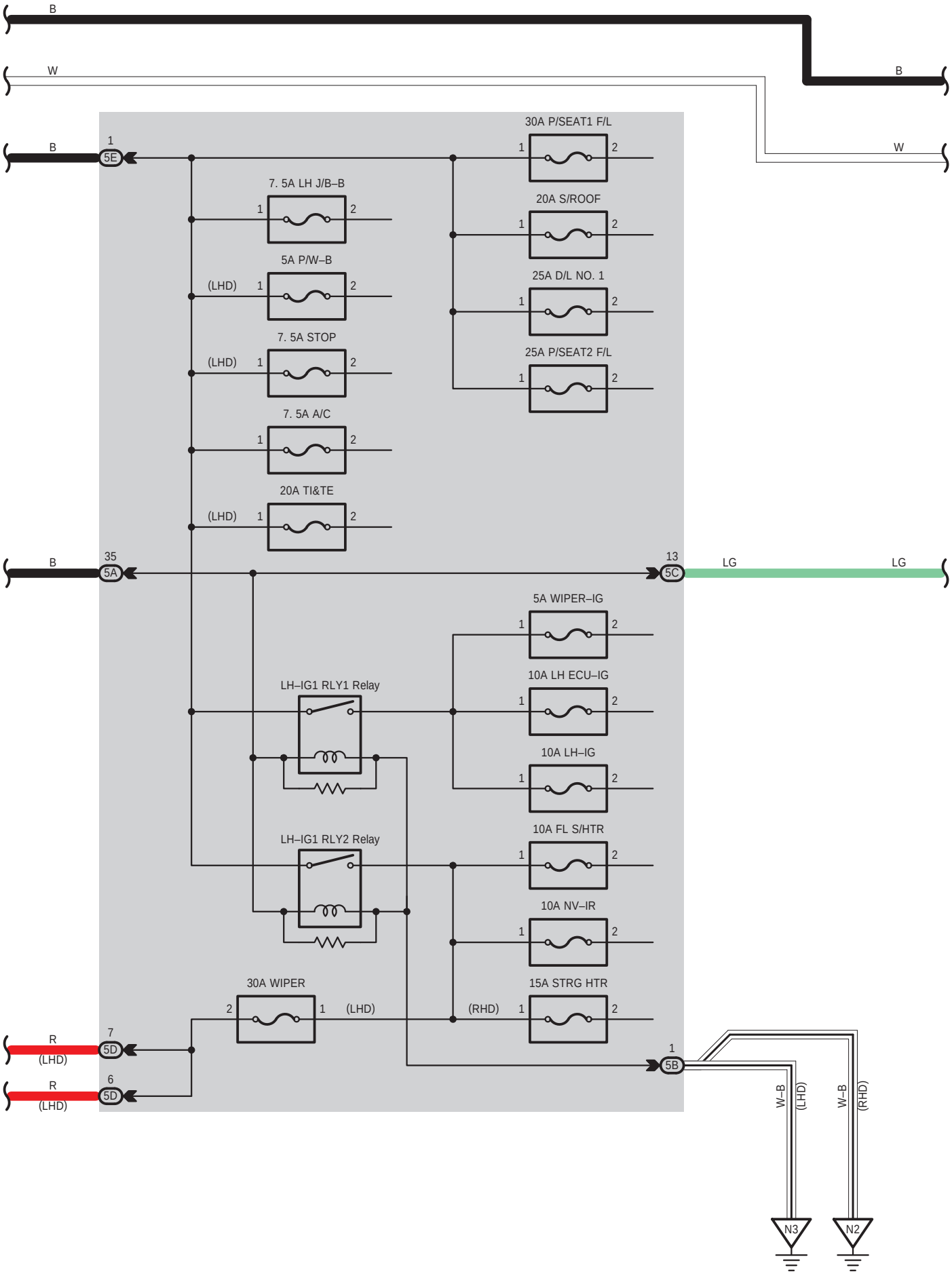
B
W
B
W
B
1
5E
30A P/SEAT1 F/L
7. 5A LH J/B–B
20A S/ROOF
5A P/W–B
(LHD)
25A D/L NO. 1
7. 5A STOP
(LHD)
25A P/SEAT2 F/L
7. 5A A/C
20A TI&TE
(LHD)
B
35
5A
13
5C
LG
LG
5A WIPER–IG
10A LH ECU–IG
LH–IG1 RLY1 Relay
10A LH–IG
10A FL S/HTR
LH–IG1 RLY2 Relay
10A NV–IR
30A WIPER
(LHD)
(RHD)
15A STRG HTR
R
(LHD)
7
5D
R
(LHD)
6
5D
1
5B
W–B
(LHD)
W–B
(RHD)
N3
N2

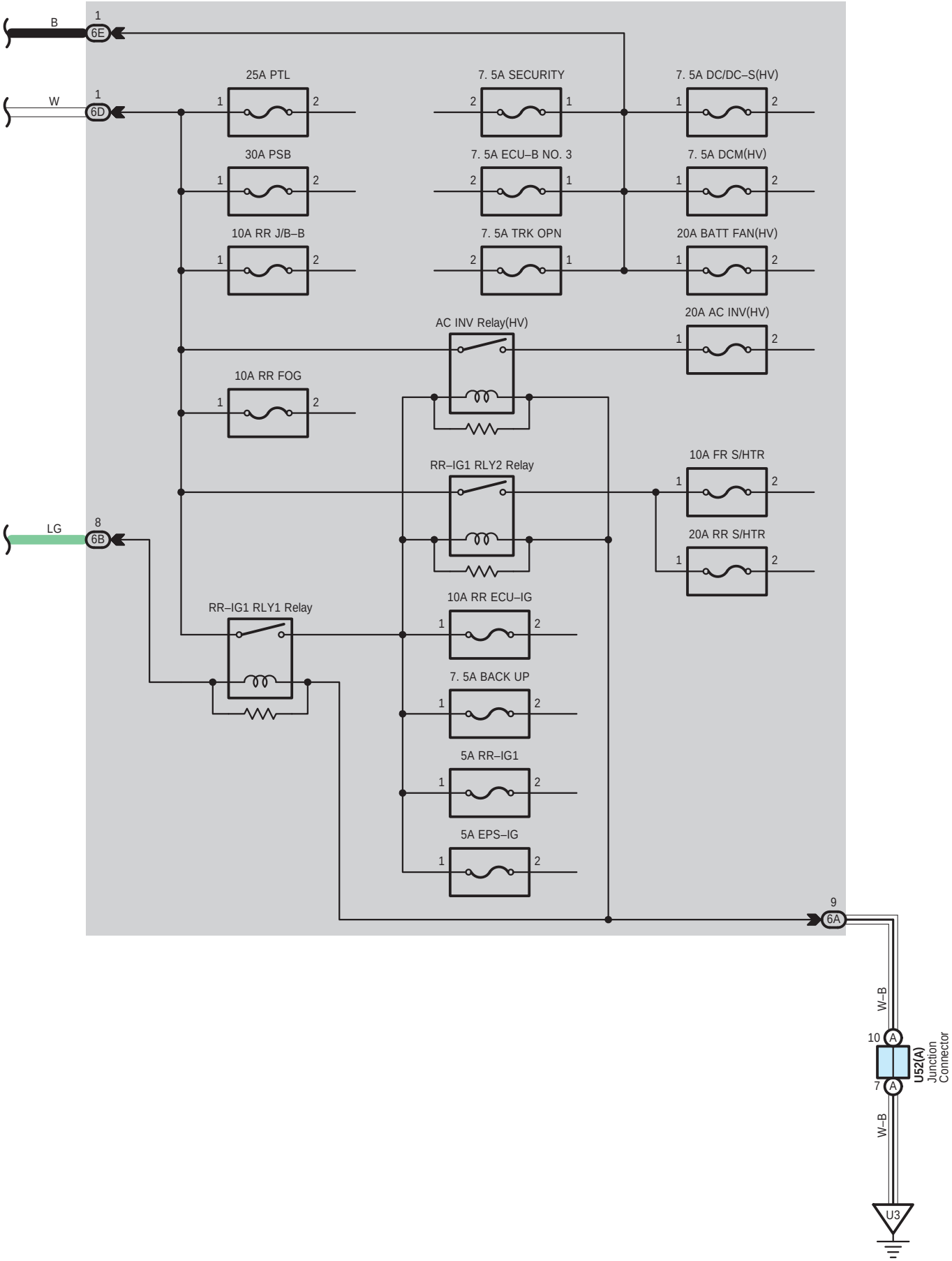
B
1
6E
W
1
6D
25A PTL
7. 5A SECURITY
7. 5A DC/DC–S(HV)
30A PSB
7. 5A ECU–B NO. 3
7. 5A DCM(HV)
10A RR J/B–B
7. 5A TRK OPN
20A BATT FAN(HV)
AC INV Relay(HV)
20A AC INV(HV)
10A RR FOG
RR–IG1 RLY2 Relay
10A FR S/HTR
LG
8
6B
20A RR S/HTR
RR–IG1 RLY1 Relay
10A RR ECU–IG
7. 5A BACK UP
5A RR–IG1
5A EPS–IG
9
6A
W–B
10
A
U52(A)
Junction
Connector
7
A
W–B
U3

A 9
Black

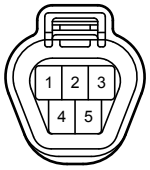

A 23
Black

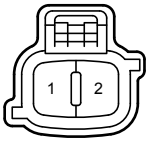

A 36
Gray

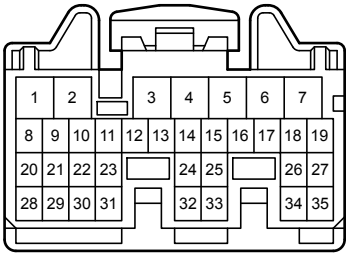

A 52
Black

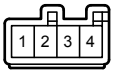

A 53
White

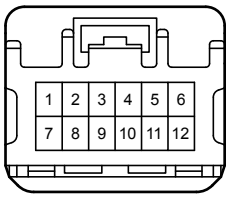

A 58
Black

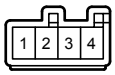

A 59
Black

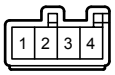

B 3
Black

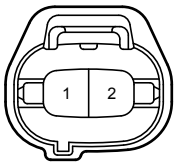

N 43
Black

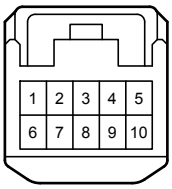

N 91
Gray

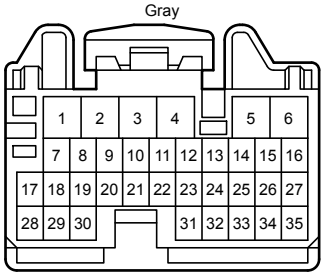

N 92
Gray

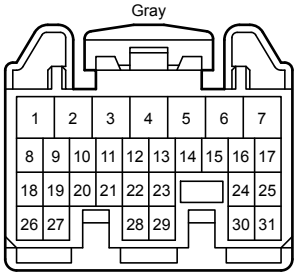

N 94
White

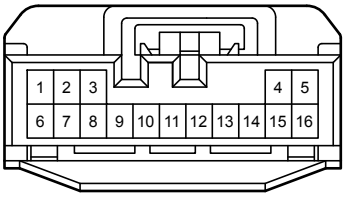

U 52
Blue

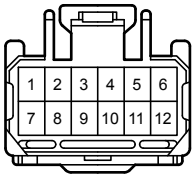

1D
White

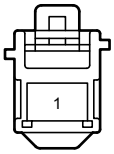

1E
White

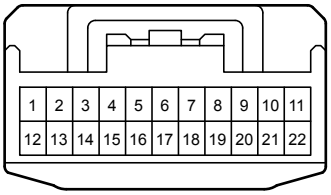

1F
White

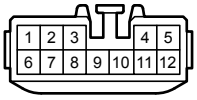

1H
White

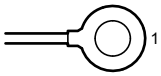

1J
White

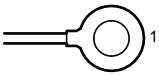

4A
White

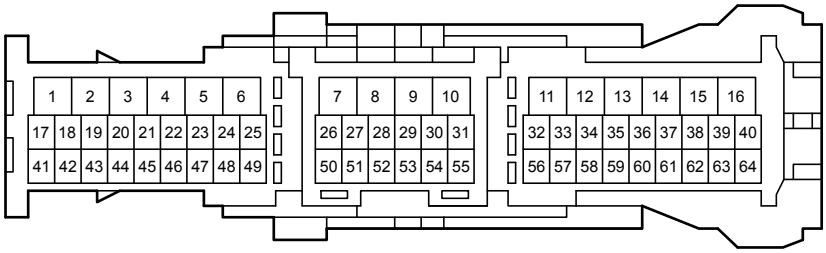

4B
White

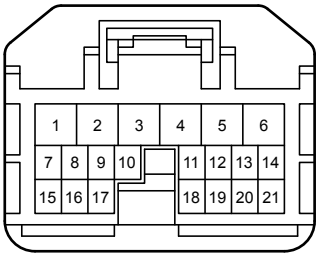

4D
White

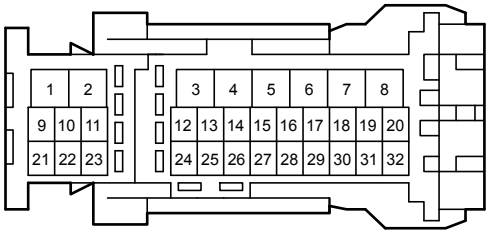

4E
White

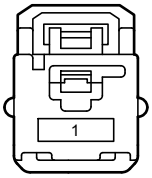

4F
White

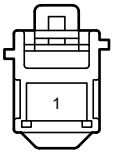

5A
White

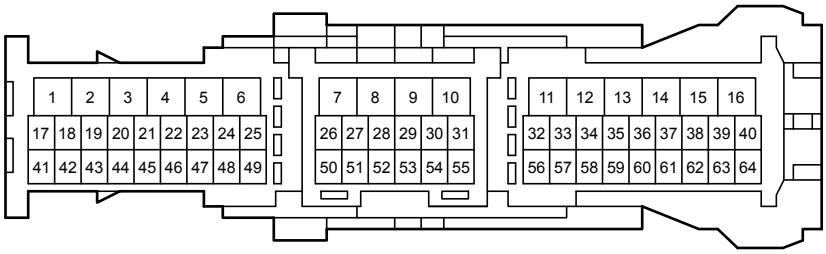

5B
White

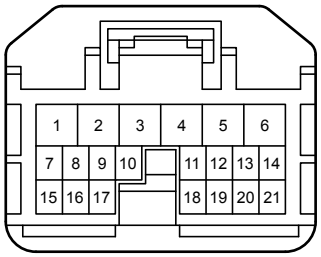

5C
White

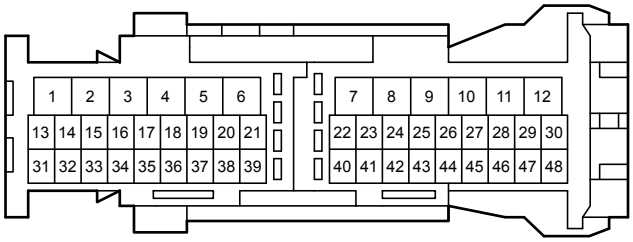

5D
White

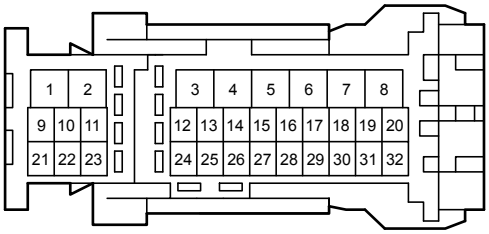

5E
White

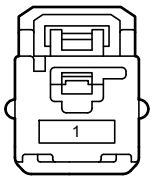

5F
White

6A
White

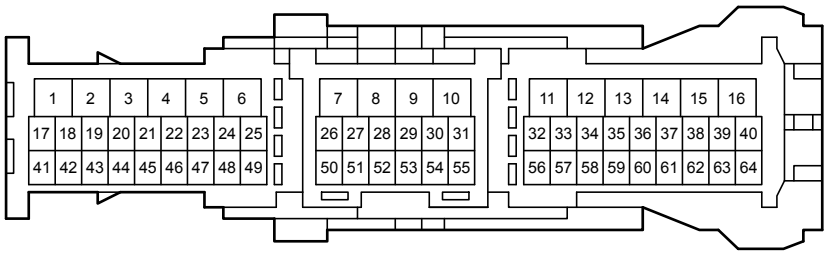

6B
White

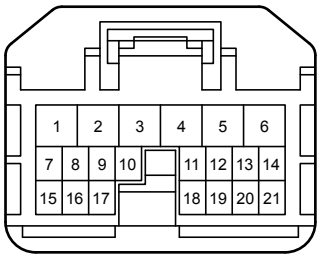

6D
White

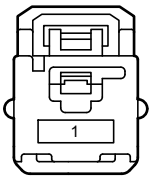

6E
White

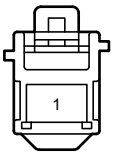

7C
White

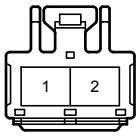

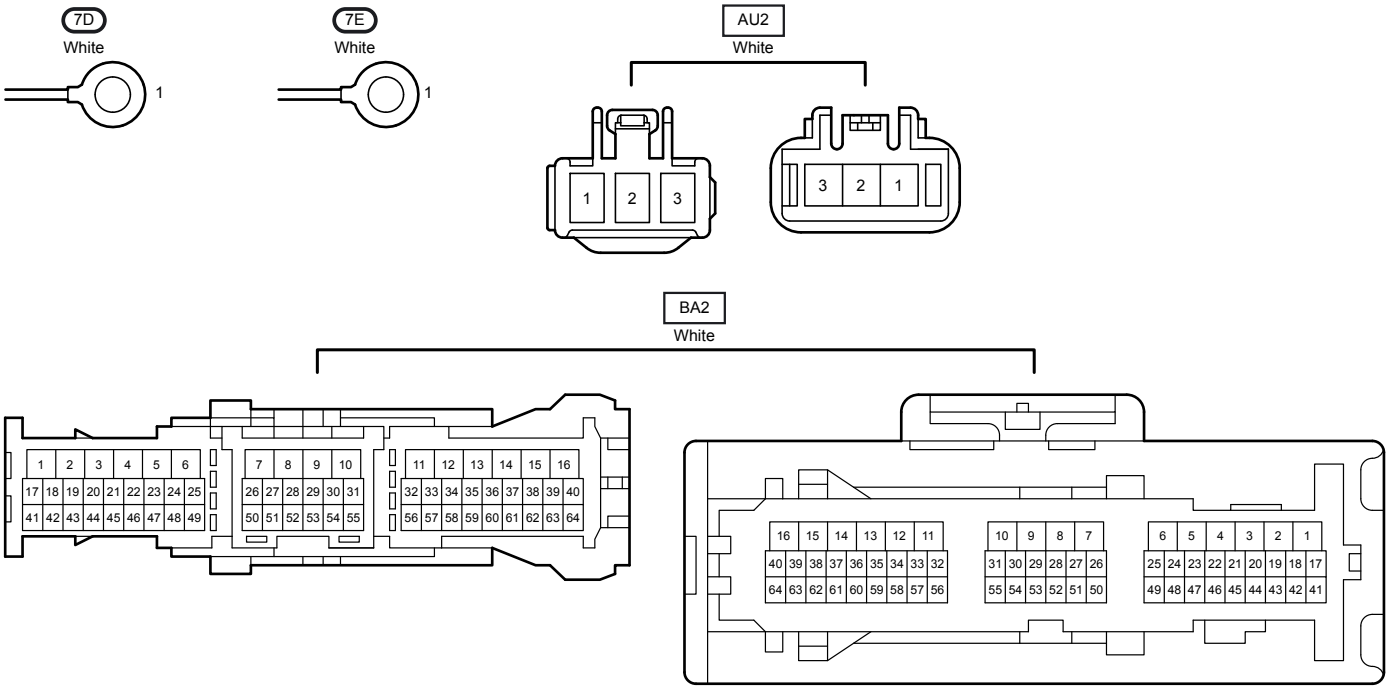
7D
White
1
7E
White
1
AU2
White
1 2 3
3 2 1
BA2
White
1 2 3 4 5 6 7 8 9 10 11 12 13 14 15 16
17 18 19 20 21 22 23 24 25 26 27 28 29 30 31 32 33 34 35 36 37 38 39 40
41 42 43 44 45 46 47 48 49 50 51 52 53 54 55 56 57 58 59 60 61 62 63 64
16 15 14 13 12 11 10 9 8 7 6 5 4 3 2 1
40 39 38 37 36 35 34 33 32 31 30 29 28 27 26 25 24 23 22 21 20 19 18 17
64 63 62 61 60 59 58 57 56 55 54 53 52 51 50 49 48 47 46 45 44 43 42 41