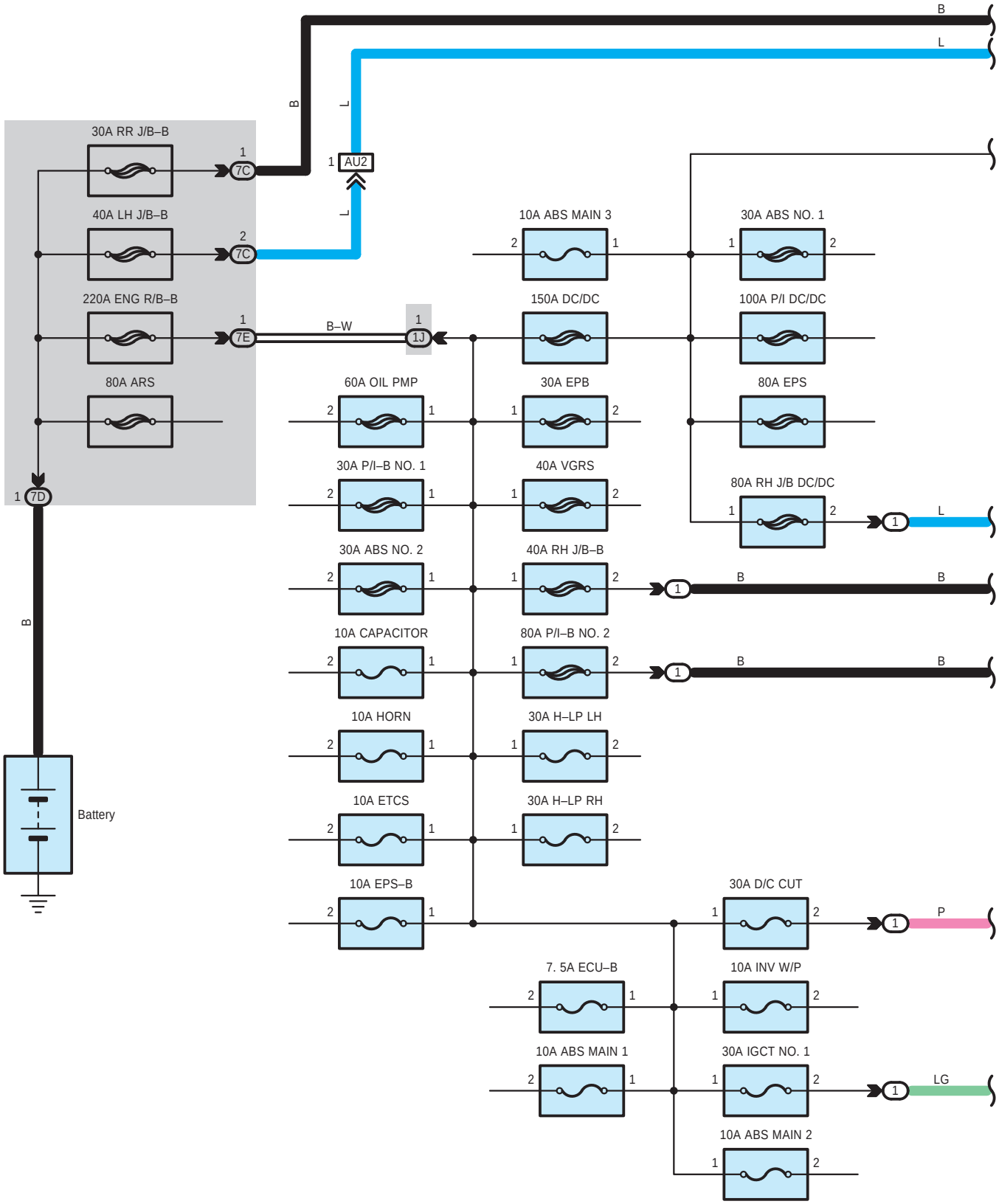
B
L
30A RR J/B–B
40A LH J/B–B
220A ENG R/B–B
80A ARS
7C
7E
7D
AU2
1J
B–W
Battery
10A ABS MAIN 3
150A DC/DC
60A OIL PMP
30A EPB
30A P/I–B NO. 1
40A VGRS
30A ABS NO. 2
40A RH J/B–B
10A CAPACITOR
80A P/I–B NO. 2
10A HORN
30A H–LP LH
10A ETCS
30A H–LP RH
10A EPS–B
30A ABS NO. 1
100A P/I DC/DC
80A EPS
80A RH J/B DC/DC
30A D/C CUT
P
7. 5A ECU–B
10A INV W/P
10A ABS MAIN 1
30A IGCT NO. 1
LG
10A ABS MAIN 2

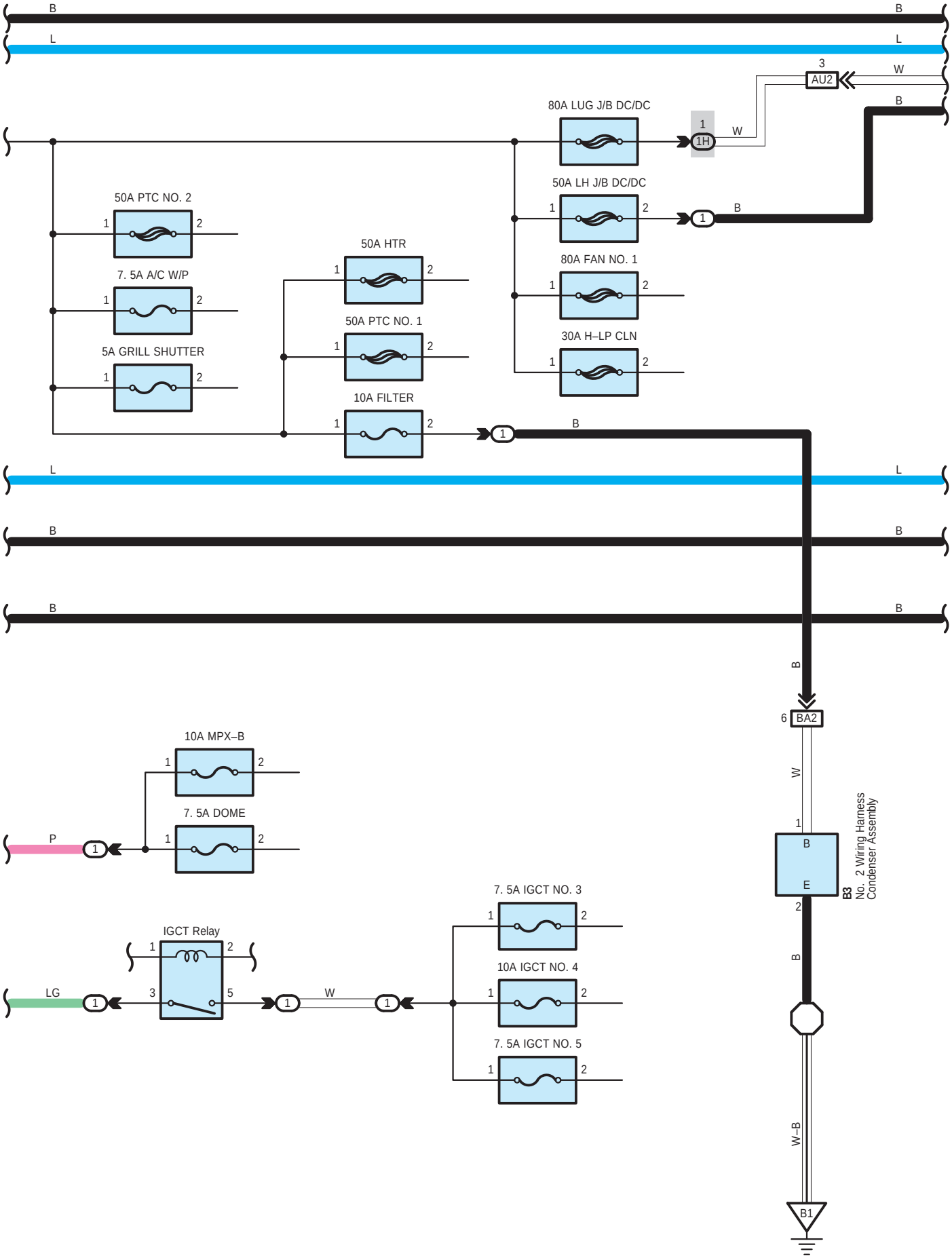
B
L
3
AU2
W
80A LUG J/B DC/DC
1
1H
50A LH J/B DC/DC
50A PTC NO. 2
7. 5A A/C W/P
5A GRILL SHUTTER
50A HTR
50A PTC NO. 1
10A FILTER
80A FAN NO. 1
30A H–LP CLN
6
BA2
10A MPX–B
7. 5A DOME
P
IGCT Relay
LG
7. 5A IGCT NO. 3
10A IGCT NO. 4
7. 5A IGCT NO. 5
B3
No. 2 Wiring Harness
Condenser Assembly
W–B
B1

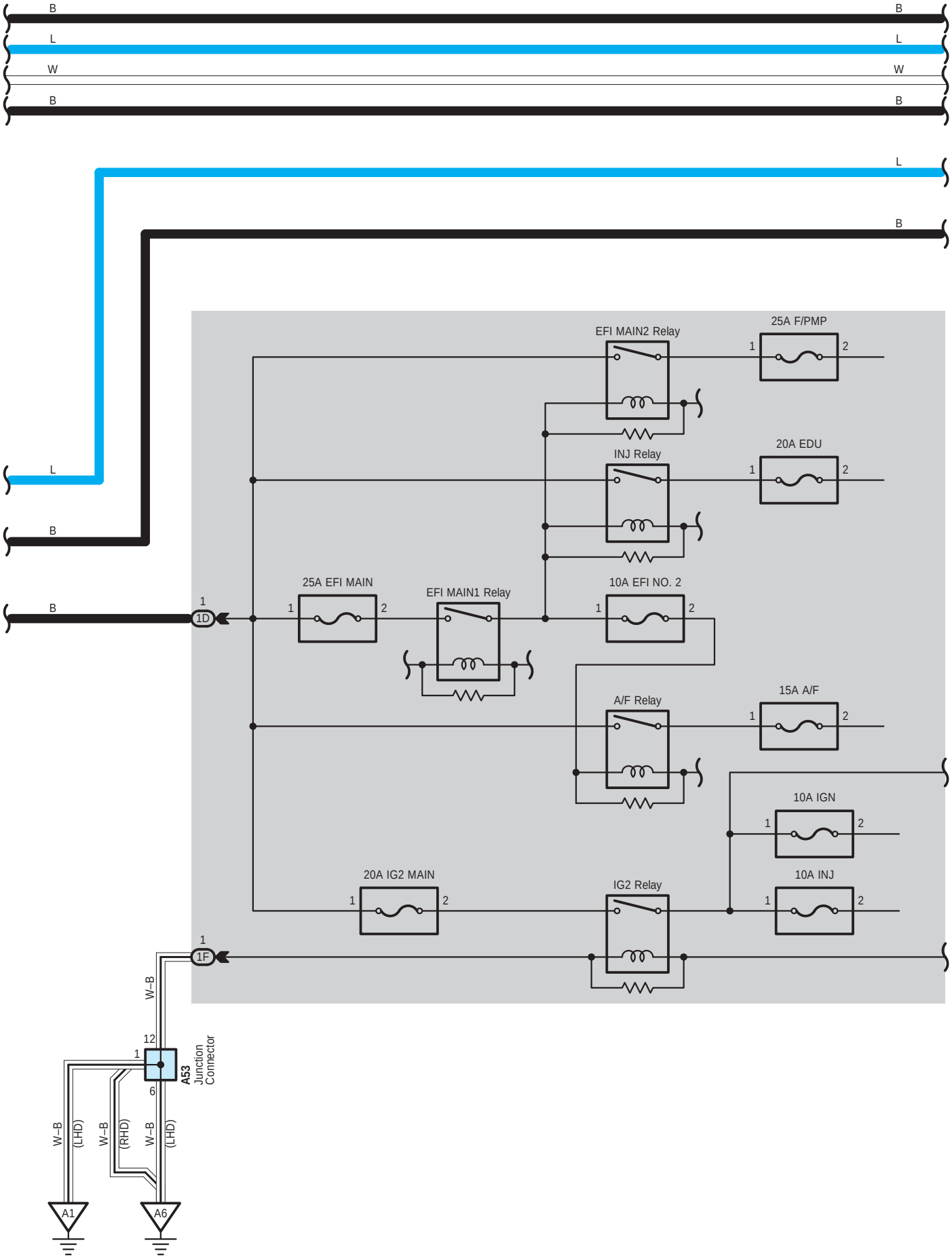
B
L
W
B
EFI MAIN2 Relay
25A F/PMP
INJ Relay
20A EDU
25A EFI MAIN
EFI MAIN1 Relay
10A EFI NO. 2
A/F Relay
15A A/F
10A IGN
20A IG2 MAIN
IG2 Relay
10A INJ
1D
1F
W–B
A53
Junction Connector
(LHD)
(RHD)
A1
A6

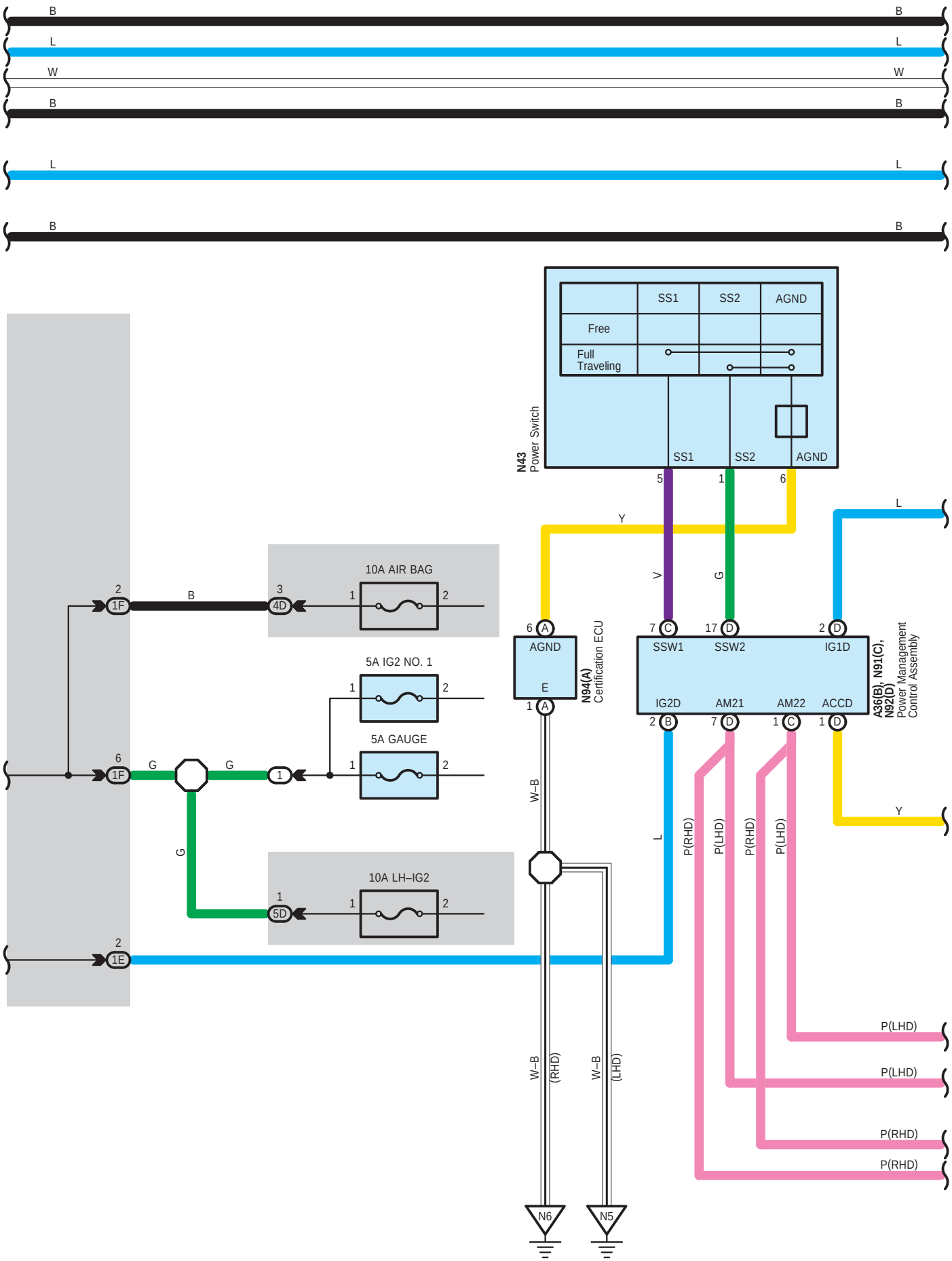
B
L
W
B
L
B
SS1
SS2
AGND
Free
Full Traveling
N43
Power Switch
SS1
SS2
AGND
5
1
6
Y
V
G
L
10A AIR BAG
2
1F
B
3
4D
1
2
5A IG2 NO. 1
5A GAUGE
6
1F
G
G
1
10A LH–IG2
1
5D
2
1E
6 A
AGND
E
1 A
N94(A)
Certification ECU
7 C
17 D
2 D
SSW1
SSW2
IG1D
IG2D
AM21
AM22
ACCD
2 B
7 D
1 C
1 D
A36(B), N91(C), N92(D)
Power Management Control Assembly
W–B
L
P(RHD)
P(LHD)
P(RHD)
P(LHD)
Y
P(LHD)
P(LHD)
P(RHD)
P(RHD)
W–B
(RHD)
W–B
(LHD)
N6
N5

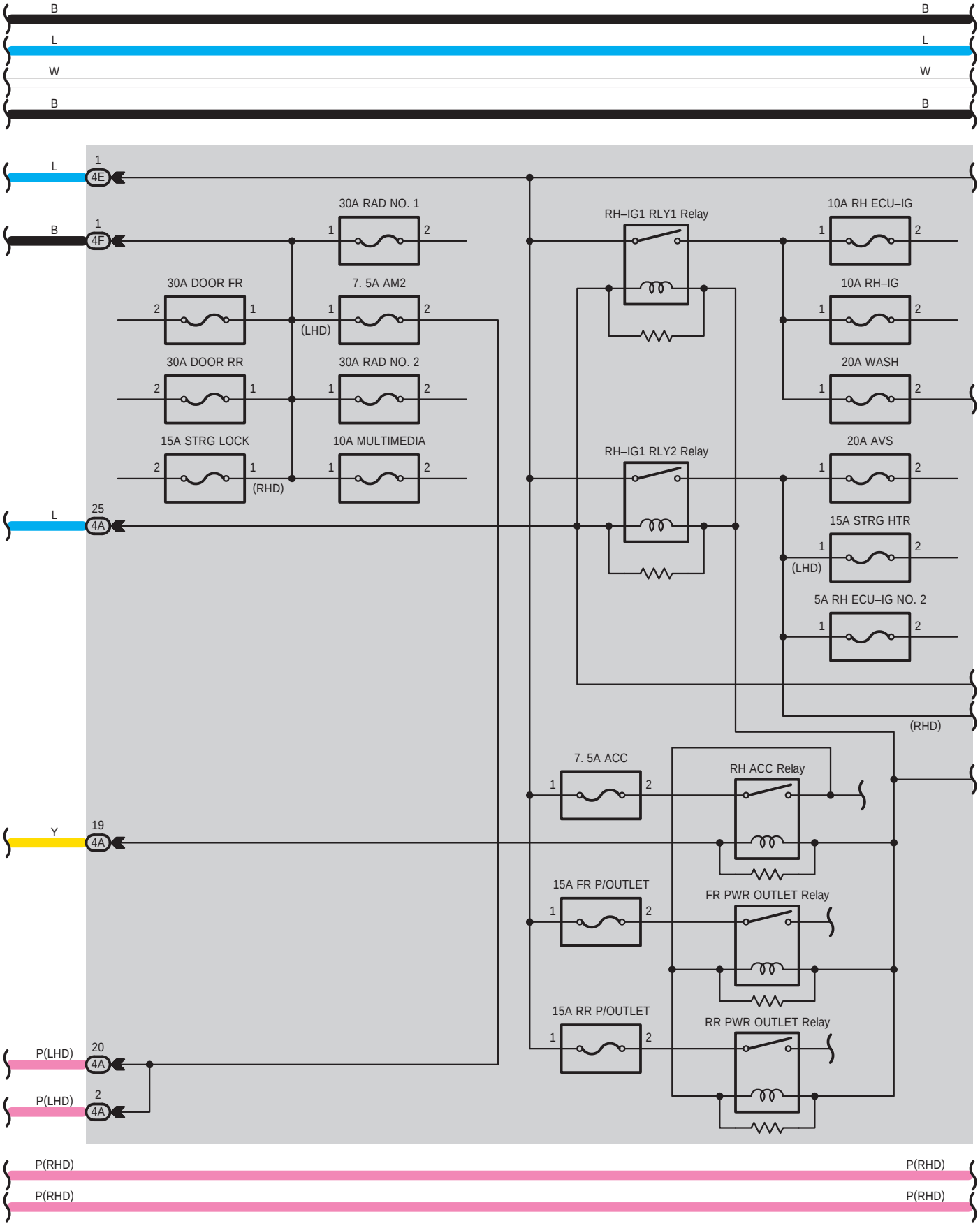
B
L
W
B
L
1
4E
B
1
4F
30A RAD NO. 1
30A DOOR FR
7. 5A AM2
(LHD)
30A DOOR RR
30A RAD NO. 2
15A STRG LOCK
10A MULTIMEDIA
(RHD)
RH–IG1 RLY1 Relay
RH–IG1 RLY2 Relay
10A RH ECU–IG
10A RH–IG
20A WASH
20A AVS
15A STRG HTR
(LHD)
5A RH ECU–IG NO. 2
(RHD)
L
25
4A
7. 5A ACC
RH ACC Relay
Y
19
4A
15A FR P/OUTLET
FR PWR OUTLET Relay
15A RR P/OUTLET
RR PWR OUTLET Relay
P(LHD)
20
4A
P(LHD)
2
4A
P(RHD)
P(RHD)
P(RHD)
P(RHD)

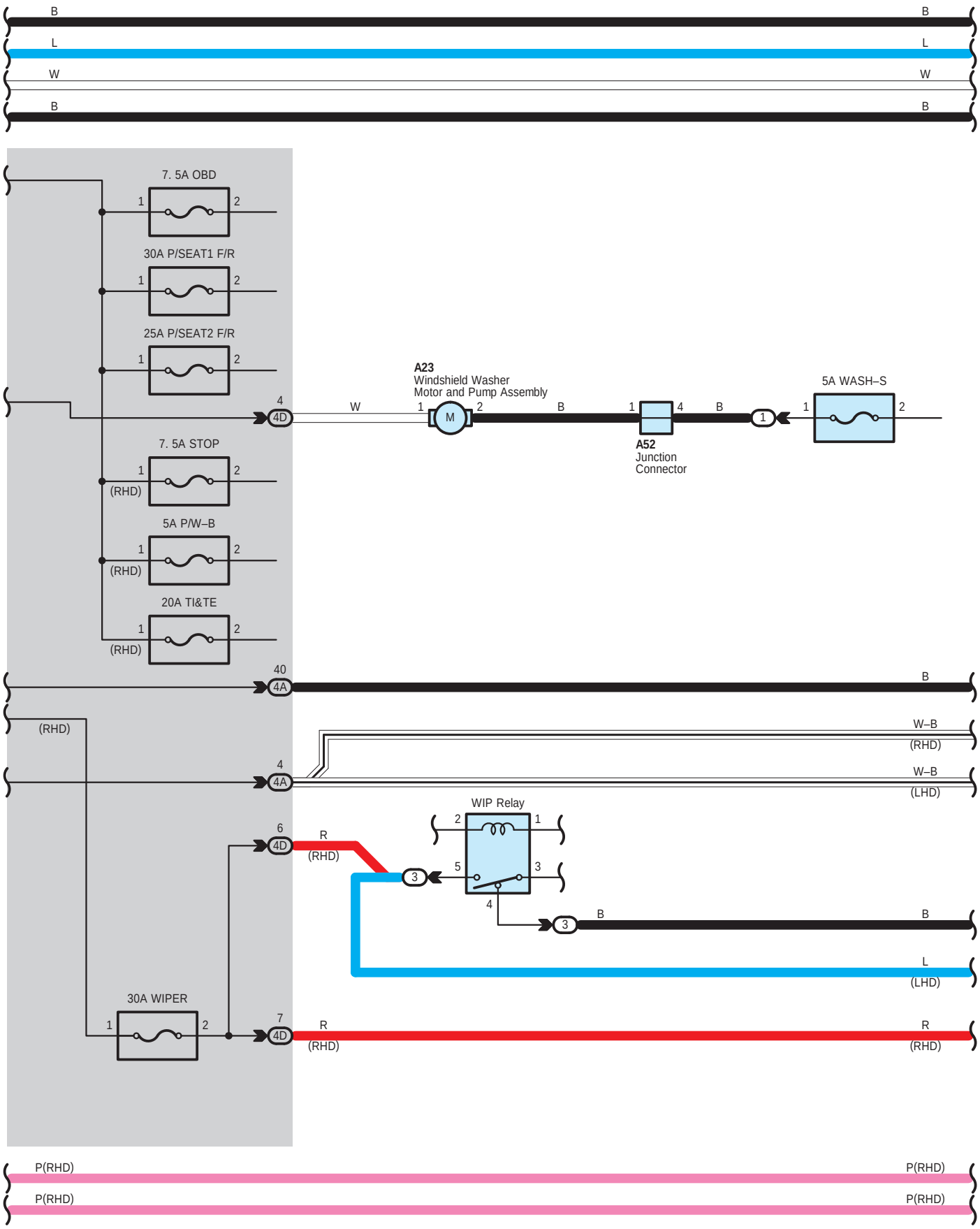
B
L
W
B
7. 5A OBD
30A P/SEAT1 F/R
25A P/SEAT2 F/R
7. 5A STOP
(RHD)
5A P/W–B
(RHD)
20A TI&TE
(RHD)
4
4D
W
A23
Windshield Washer
Motor and Pump Assembly
M
B
A52
Junction
Connector
5A WASH–S
40
4A
(RHD)
W–B
(RHD)
W–B
(LHD)
WIP Relay
6
4D
R
(RHD)
L
(LHD)
30A WIPER
7
4D
P(RHD)

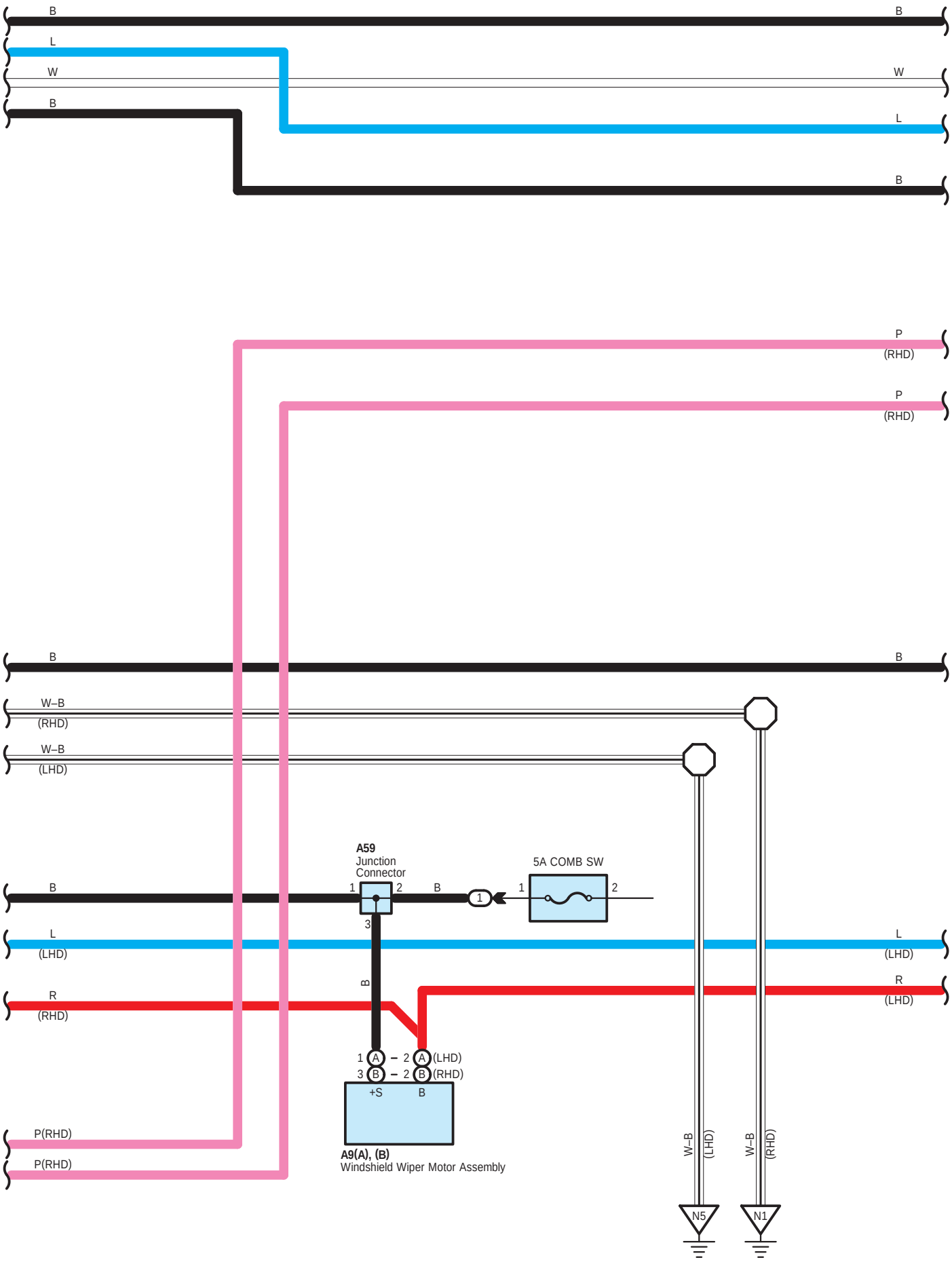
B
B
L
W
W
B
L
B
P
(RHD)
P
(RHD)
B
B
W–B
(RHD)
W–B
(LHD)
A59
Junction
Connector
5A COMB SW
B
1
2
B
1
1
2
3
L
(LHD)
L
(LHD)
B
R
(RHD)
R
(LHD)
1 A – 2 A (LHD)
3 B – 2 B (RHD)
+S
B
P(RHD)
P(RHD)
A9(A), (B)
Windshield Wiper Motor Assembly
W–B
(LHD)
W–B
(RHD)
N5
N1

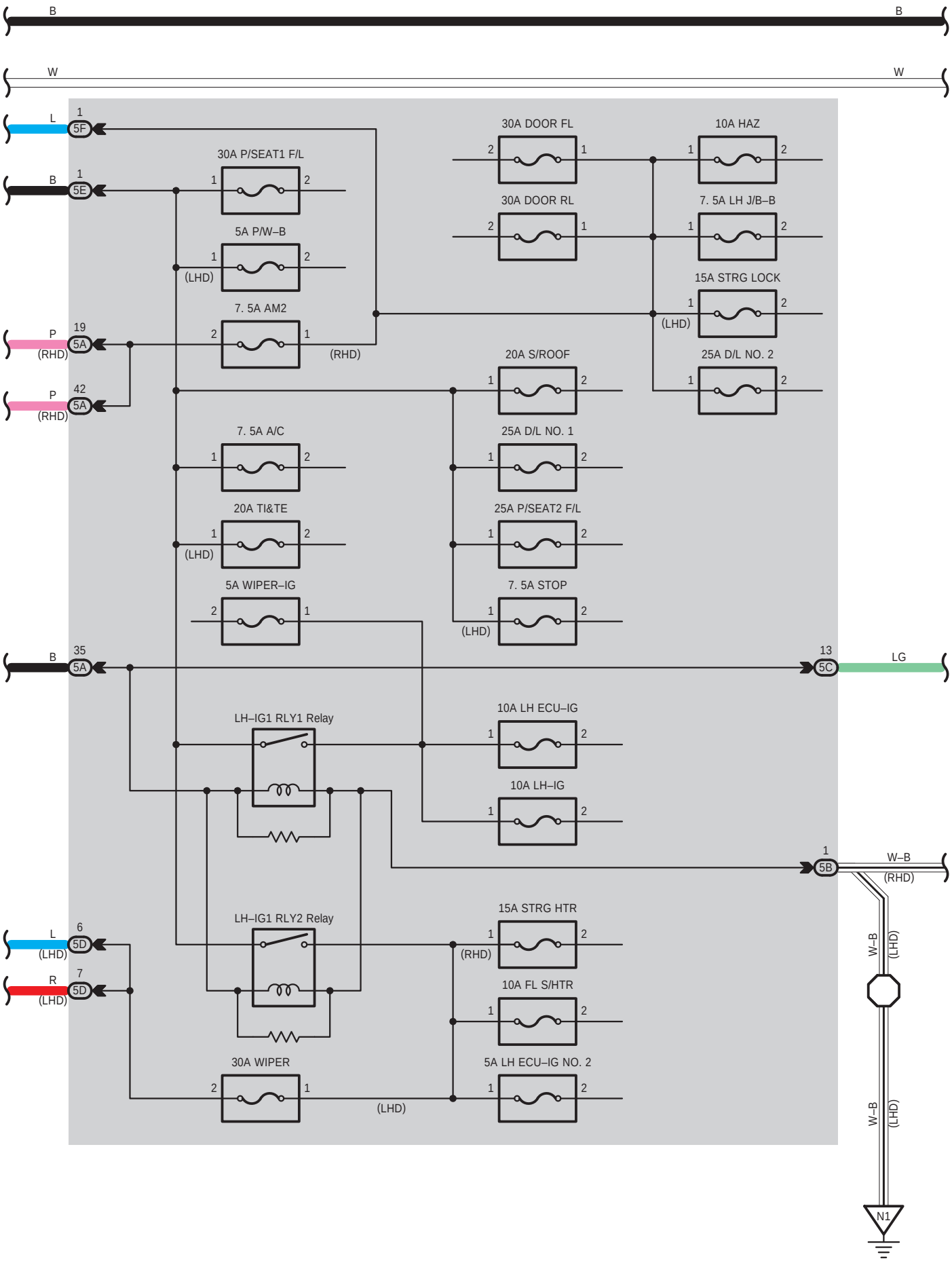
B
B
W
W
L
1
5F
B
1
5E
P
19
5A
(RHD)
P
42
5A
(RHD)
B
35
5A
L
6
5D
(LHD)
R
7
5D
(LHD)
30A P/SEAT1 F/L
5A P/W–B
(LHD)
7. 5A AM2
(RHD)
7. 5A A/C
20A TI&TE
(LHD)
5A WIPER–IG
30A WIPER
(LHD)
30A DOOR FL
30A DOOR RL
10A HAZ
7. 5A LH J/B–B
15A STRG LOCK
(LHD)
25A D/L NO. 2
20A S/ROOF
25A D/L NO. 1
25A P/SEAT2 F/L
7. 5A STOP
(LHD)
LH–IG1 RLY1 Relay
LH–IG1 RLY2 Relay
10A LH ECU–IG
10A LH–IG
15A STRG HTR
(RHD)
10A FL S/HTR
5A LH ECU–IG NO. 2
(LHD)
13
5C
LG
1
5B
W–B
(RHD)
W–B
(LHD)
W–B
(LHD)
N1

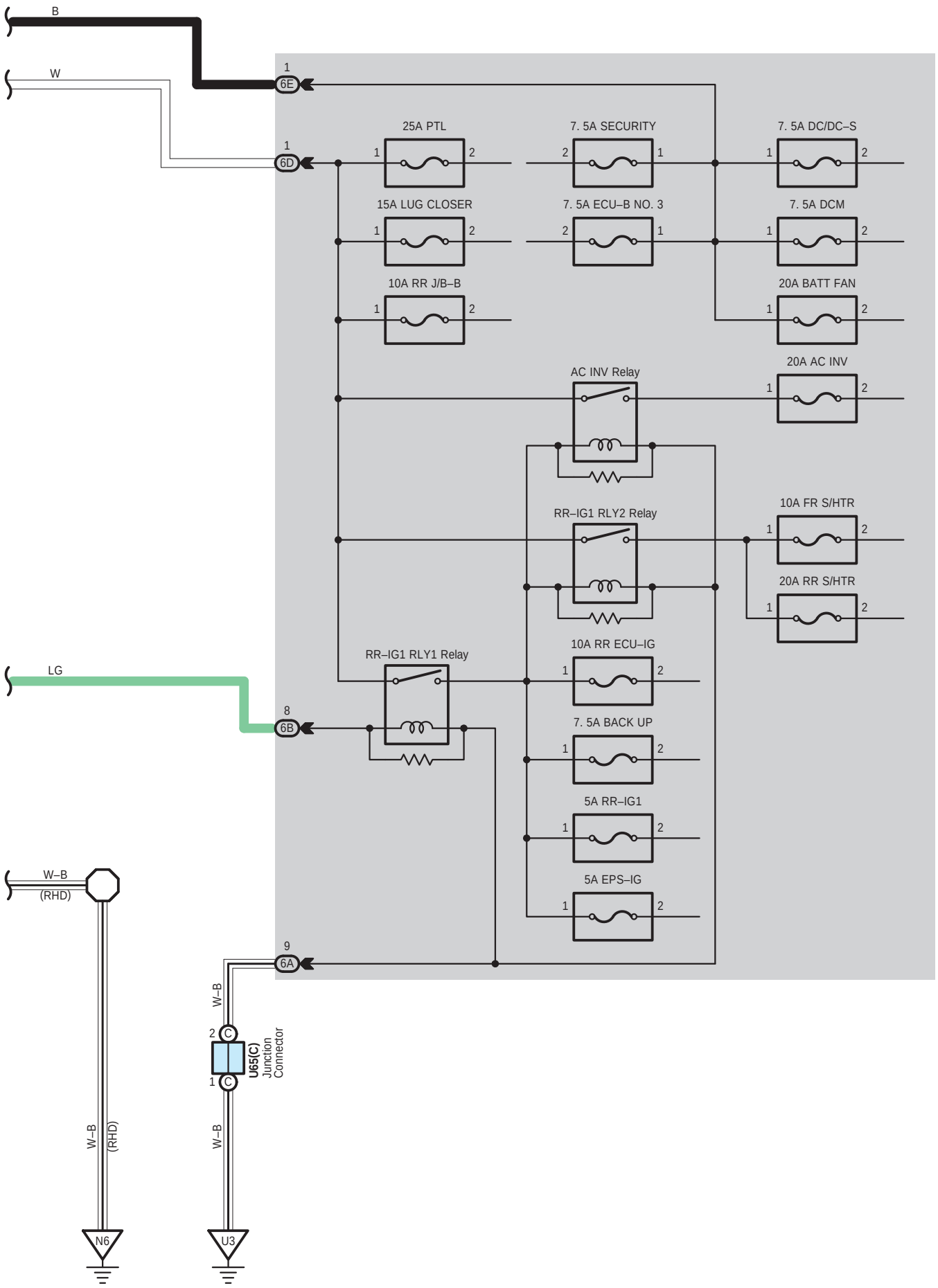
B
W
1
6E
1
6D
25A PTL
7. 5A SECURITY
7. 5A DC/DC–S
15A LUG CLOSER
7. 5A ECU–B NO. 3
7. 5A DCM
10A RR J/B–B
20A BATT FAN
20A AC INV
AC INV Relay
10A FR S/HTR
RR–IG1 RLY2 Relay
20A RR S/HTR
10A RR ECU–IG
RR–IG1 RLY1 Relay
LG
8
6B
7. 5A BACK UP
5A RR–IG1
5A EPS–IG
W–B
(RHD)
9
6A
W–B
2
C
U65(C)
Junction
Connector
1
C
W–B
W–B
(RHD)
N6
U3

A 9
Black

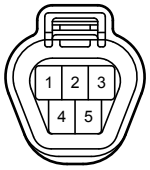

A 23
Black

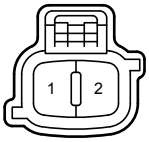

A 36
Gray

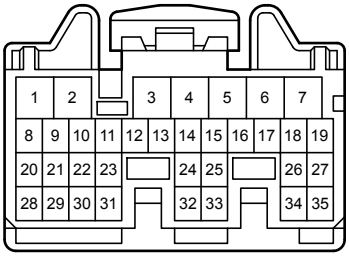

A 52
Black

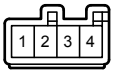

A 53
White

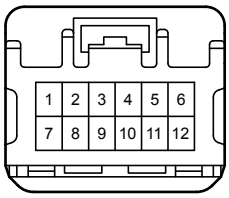

A 59
Black

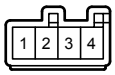

B 3
Black

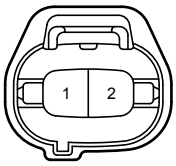

N 43
Black

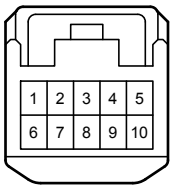

N 91
Gray

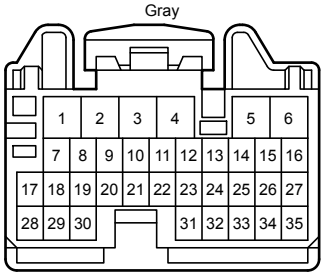

N 92
Gray

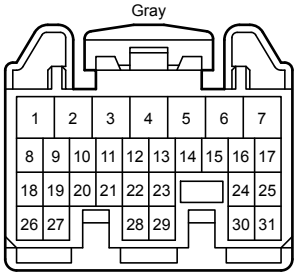

N 94
White

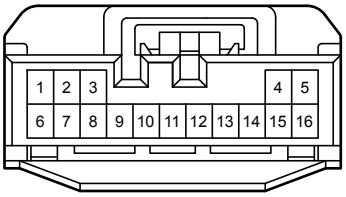

U 65
White

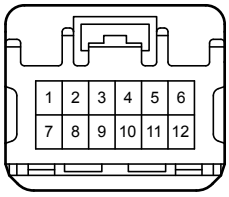

1D
White

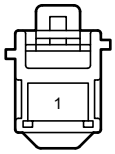

1E
White

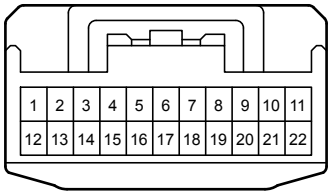

1F
White

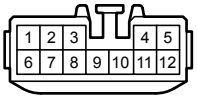

1H
White

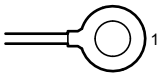

1J
White

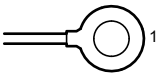

4A
White

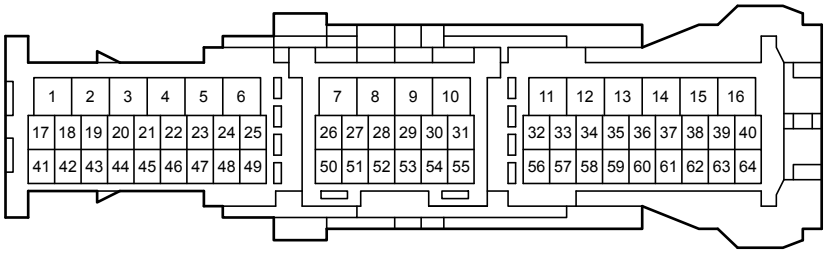

4D
White

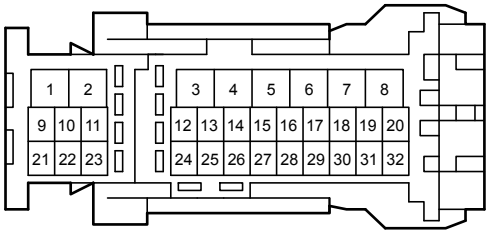

4E
White

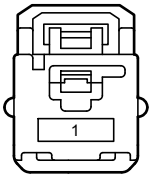

4F
White

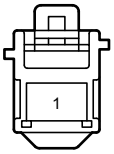

5A
White

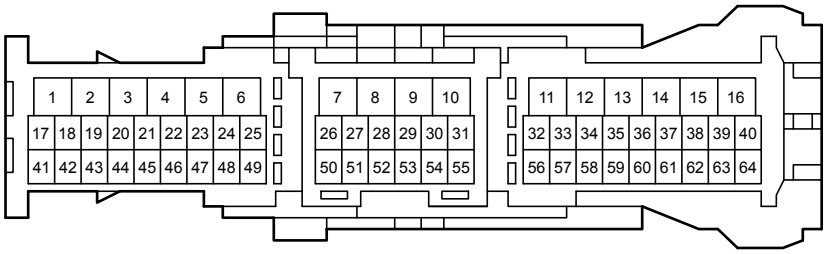

5B
White

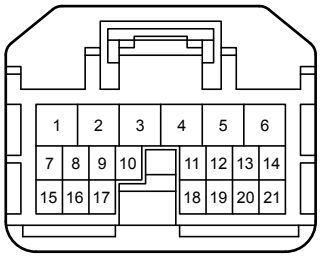

5C
White

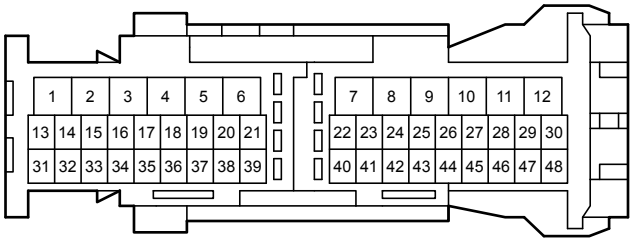

5D
White

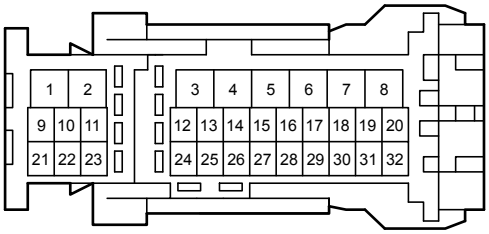

5E
White

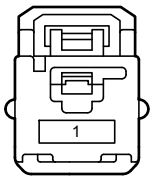

5F
White

6A
White

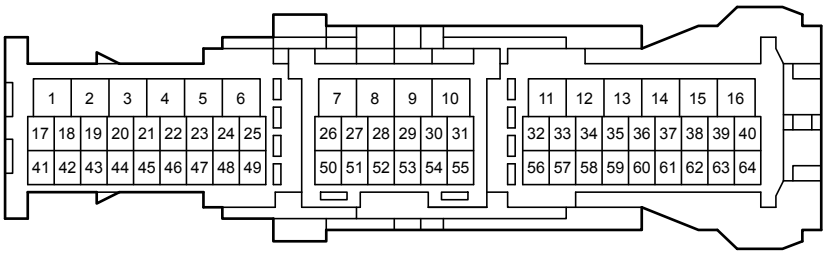

6B
White

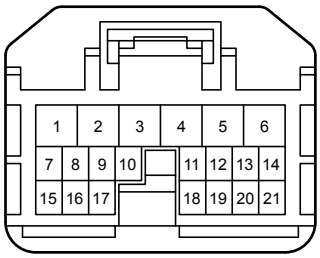

6D
White

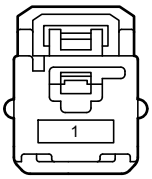

6E
White

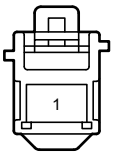

7C
White

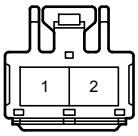

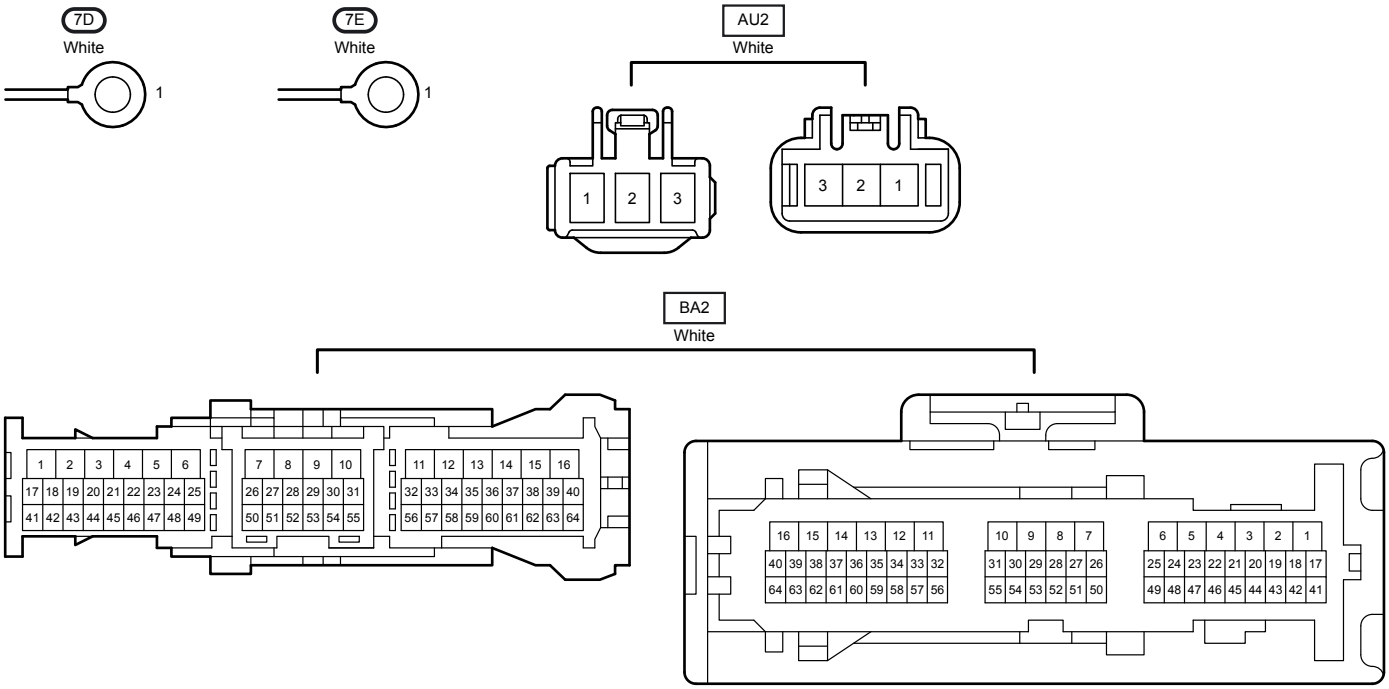
7D
White
1
7E
White
1
AU2
White
1 2 3
3 2 1
BA2
White
1 2 3 4 5 6 7 8 9 10 11 12 13 14 15 16
17 18 19 20 21 22 23 24 25 26 27 28 29 30 31 32 33 34 35 36 37 38 39 40
41 42 43 44 45 46 47 48 49 50 51 52 53 54 55 56 57 58 59 60 61 62 63 64
16 15 14 13 12 11 10 9 8 7 6 5 4 3 2 1
40 39 38 37 36 35 34 33 32 31 30 29 28 27 26 25 24 23 22 21 20 19 18 17
64 63 62 61 60 59 58 57 56 55 54 53 52 51 50 49 48 47 46 45 44 43 42 41