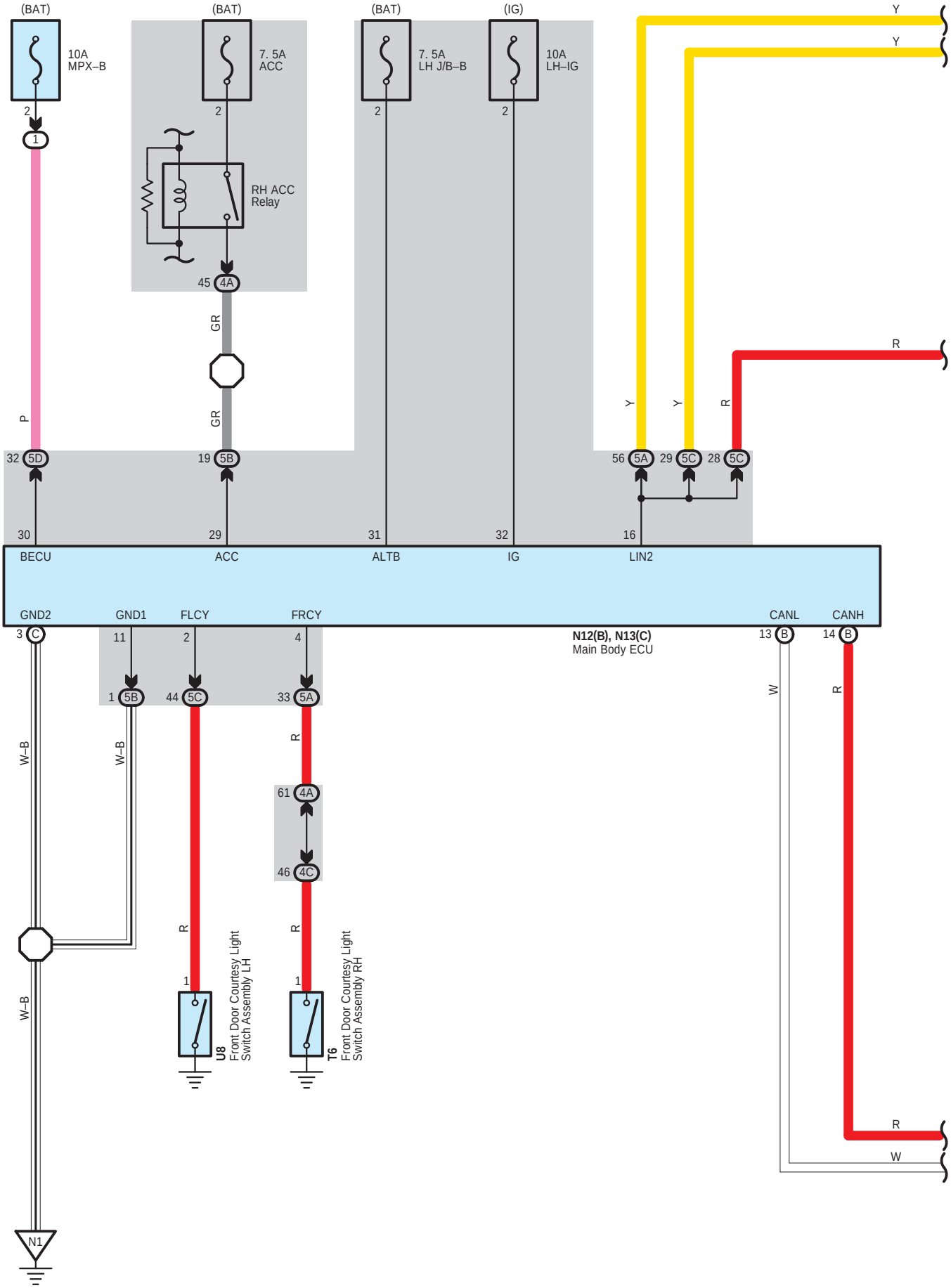
(BAT)
10A
MPX–B
2
1
P
32 5D
30
BECU
(BAT)
7. 5A
ACC
2
RH ACC
Relay
45 4A
GR
GR
19 5B
29
ACC
(BAT)
7. 5A
LH J/B–B
2
31
ALTB
(IG)
10A
LH–IG
2
32
IG
Y
Y
Y
Y
R
R
56 5A
29 5C
28 5C
16
LIN2
GND2
3 C
GND1
11
1 5B
FLCY
2
44 5C
FRCY
4
33 5A
61 4A
46 4C
N12(B), N13(C)
Main Body ECU
CANL
13 B
CANH
14 B
W
R
W–B
W–B
W–B
R
R
1
U8
Front Door Courtesy Light
Switch Assembly LH
1
T6
Front Door Courtesy Light
Switch Assembly RH
R
W
N1

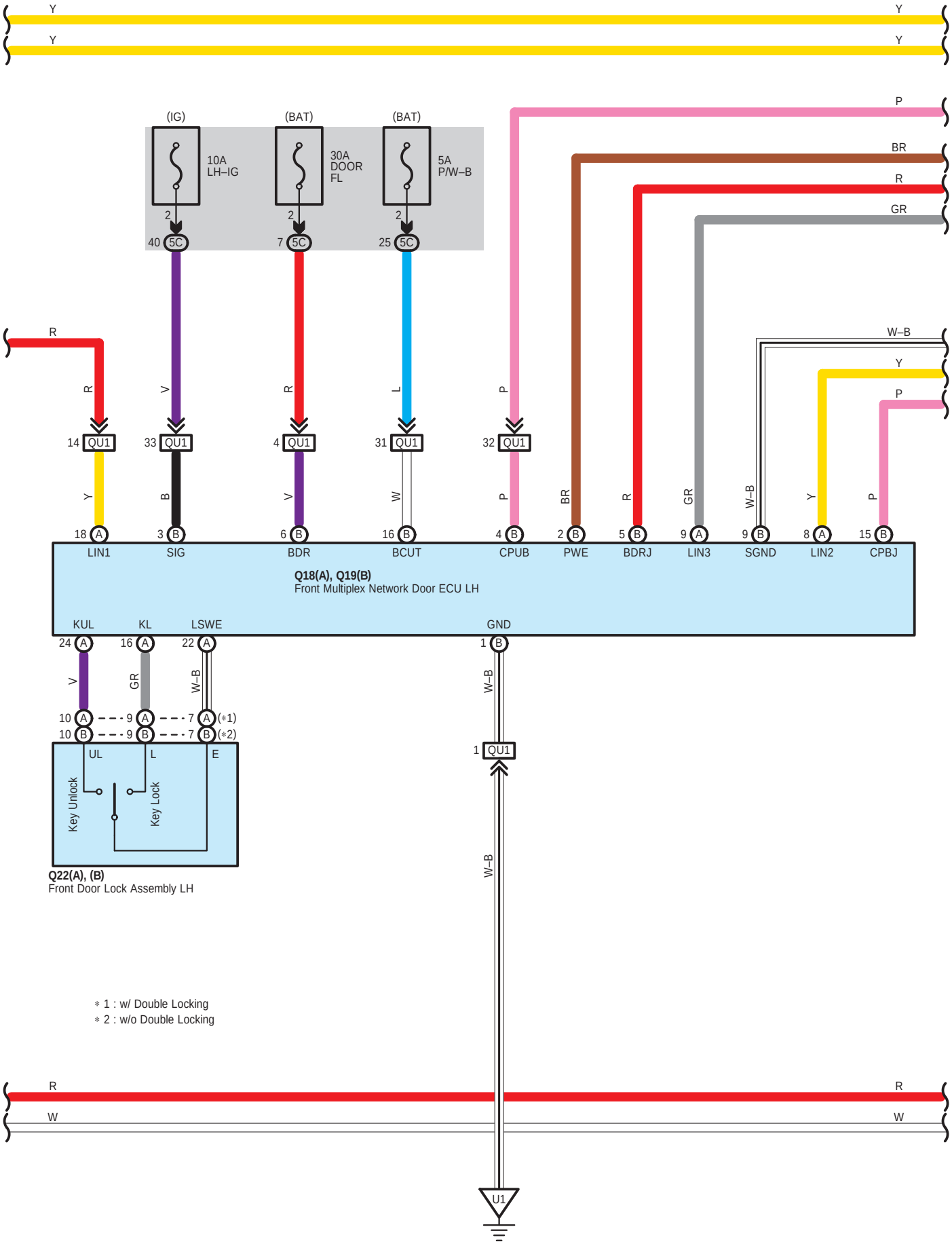
Y
Y
Y
Y
(IG)
(BAT)
(BAT)
10A
LH–IG
30A
DOOR
FL
5A
P/W–B
2
40 5C
7 5C
25 5C
P
BR
R
GR
R
W–B
Y
P
14 QU1
33 QU1
4 QU1
31 QU1
32 QU1
18 A
3 B
6 B
16 B
4 B
2 B
5 B
9 A
9 B
8 A
15 B
LIN1
SIG
BDR
BCUT
CPUB
PWE
BDRJ
LIN3
SGND
LIN2
CPBJ
Q18(A), Q19(B)
Front Multiplex Network Door ECU LH
KUL
KL
LSWE
GND
24 A
16 A
22 A
1 B
10 A
9 A
7 A
(*1)
10 B
9 B
7 B
(*2)
1 QU1
UL
L
E
Key Unlock
Key Lock
Q22(A), (B)
Front Door Lock Assembly LH
* 1 : w/ Double Locking
* 2 : w/o Double Locking
R
W
R
W
U1

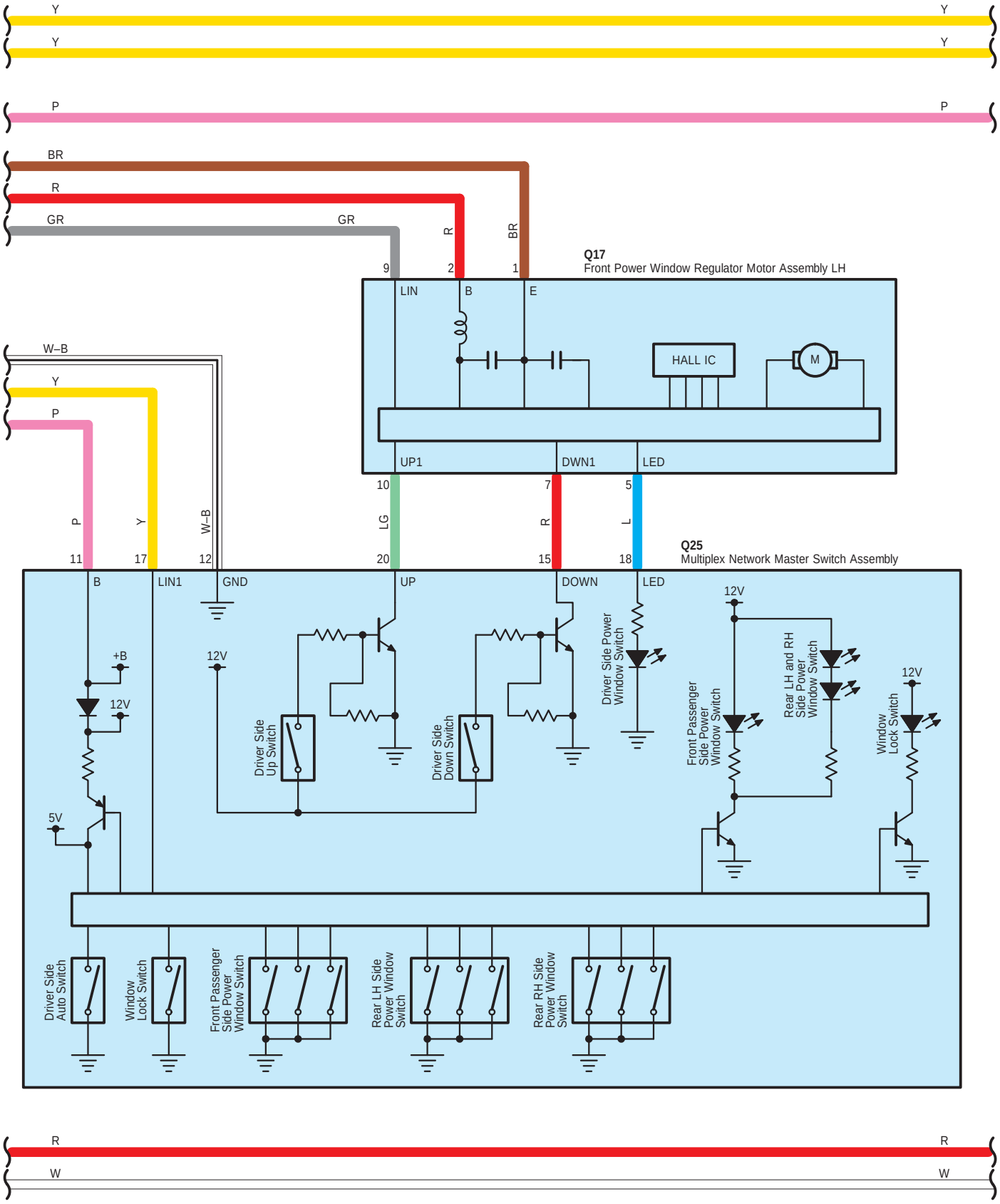
Y
Y
Y
Y
P
P
BR
R
GR
GR
R
BR
9
2
1
Q17
Front Power Window Regulator Motor Assembly LH
LIN
B
E
HALL IC
M
W–B
Y
P
UP1
DWN1
LED
10
7
5
P
Y
W–B
LG
R
L
11
17
12
20
15
18
Q25
Multiplex Network Master Switch Assembly
B
LIN1
GND
UP
DOWN
LED
12V
+B
12V
12V
Driver Side Up Switch
Driver Side Down Switch
Driver Side Power Window Switch
Front Passenger Side Power Window Switch
Rear LH and RH Side Power Window Switch
Window Lock Switch
5V
Driver Side Auto Switch
Window Lock Switch
Front Passenger Side Power Window Switch
Rear LH Side Power Window Switch
Rear RH Side Power Window Switch
R
R
W
W

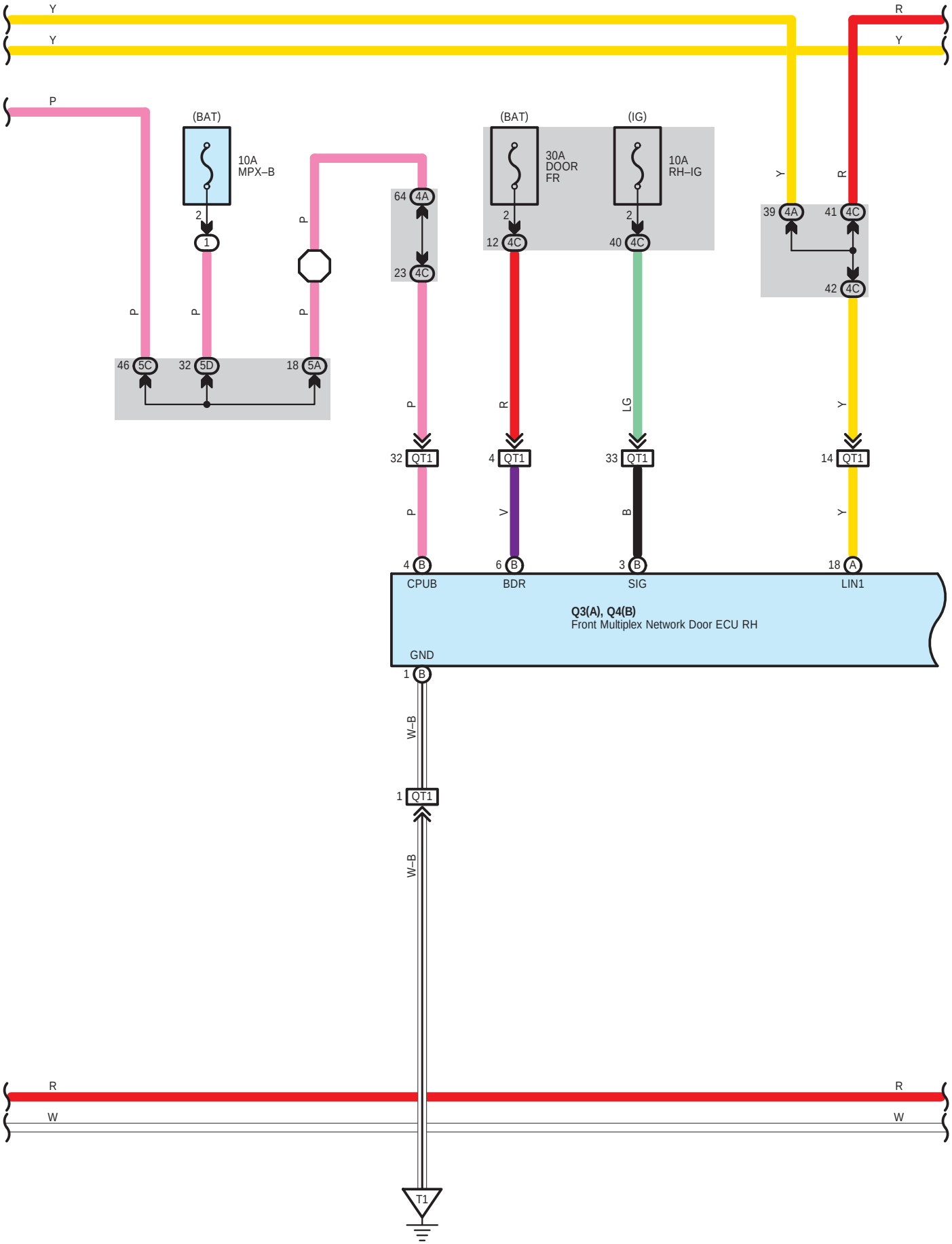
Y
Y
R
Y
P
(BAT)
10A
MPX–B
2
1
P
P
P
46 5C
32 5D
18 5A
P
64 4A
23 4C
(BAT)
30A
DOOR
FR
2
12 4C
(IG)
10A
RH–IG
2
40 4C
Y
R
39 4A
41 4C
42 4C
P
R
LG
Y
32 QT1
4 QT1
33 QT1
14 QT1
P
V
B
Y
4 B
CPUB
6 B
BDR
3 B
SIG
18 A
LIN1
Q3(A), Q4(B)
Front Multiplex Network Door ECU RH
GND
1 B
W–B
1 QT1
W–B
R
W
R
W
T1

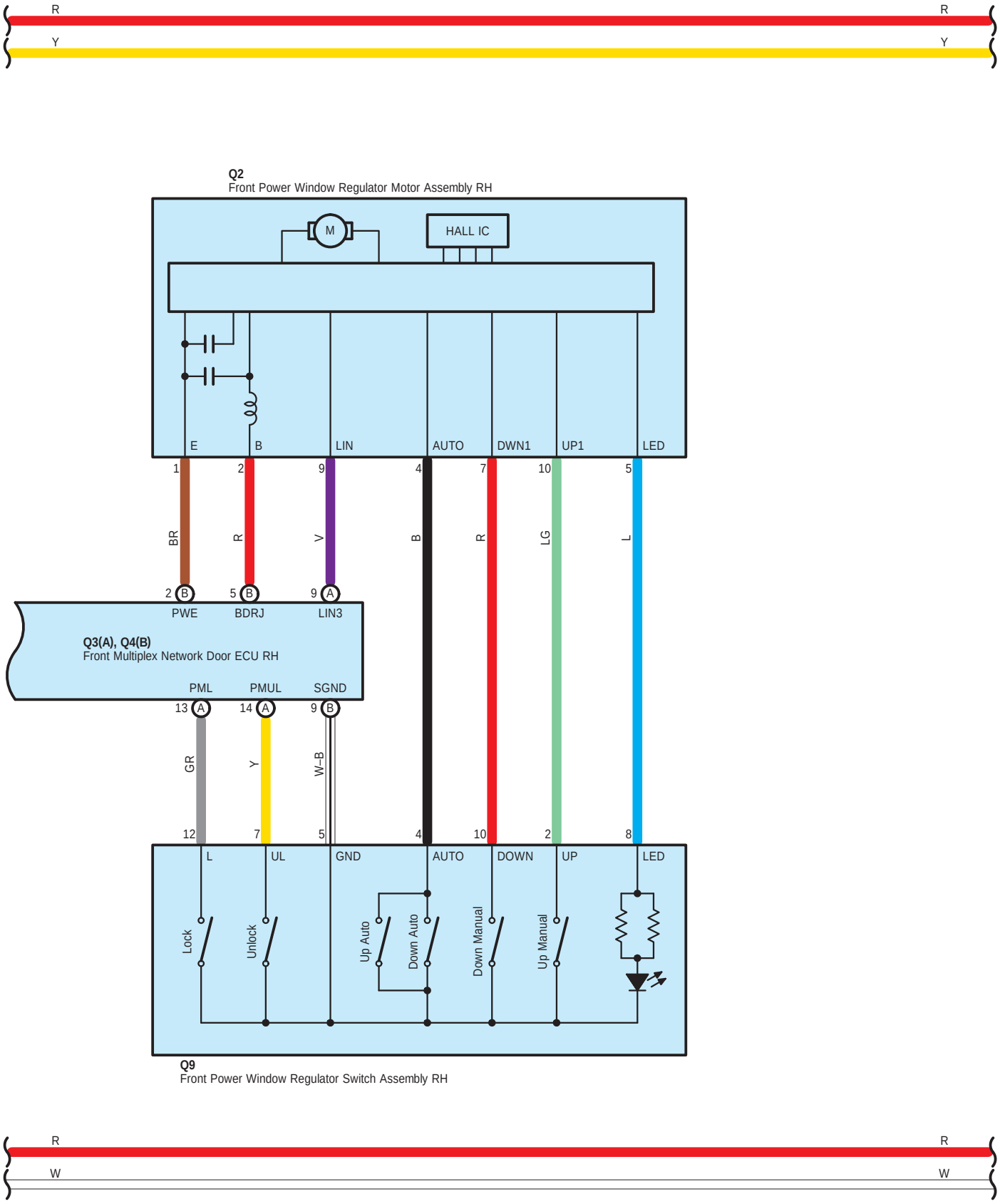
R
R
Y
Y
Q2
Front Power Window Regulator Motor Assembly RH
M
HALL IC
E
B
LIN
AUTO
DWN1
UP1
LED
1
2
9
4
7
10
5
BR
R
V
B
R
LG
L
2 B
5 B
9 A
PWE
BDRJ
LIN3
Q3(A), Q4(B)
Front Multiplex Network Door ECU RH
PML
PMUL
SGND
13 A
14 A
9 B
GR
Y
W–B
12
7
5
4
10
2
8
L
UL
GND
AUTO
DOWN
UP
LED
Lock
Unlock
Up Auto
Down Auto
Down Manual
Up Manual
Q9
Front Power Window Regulator Switch Assembly RH
R
R
W
W

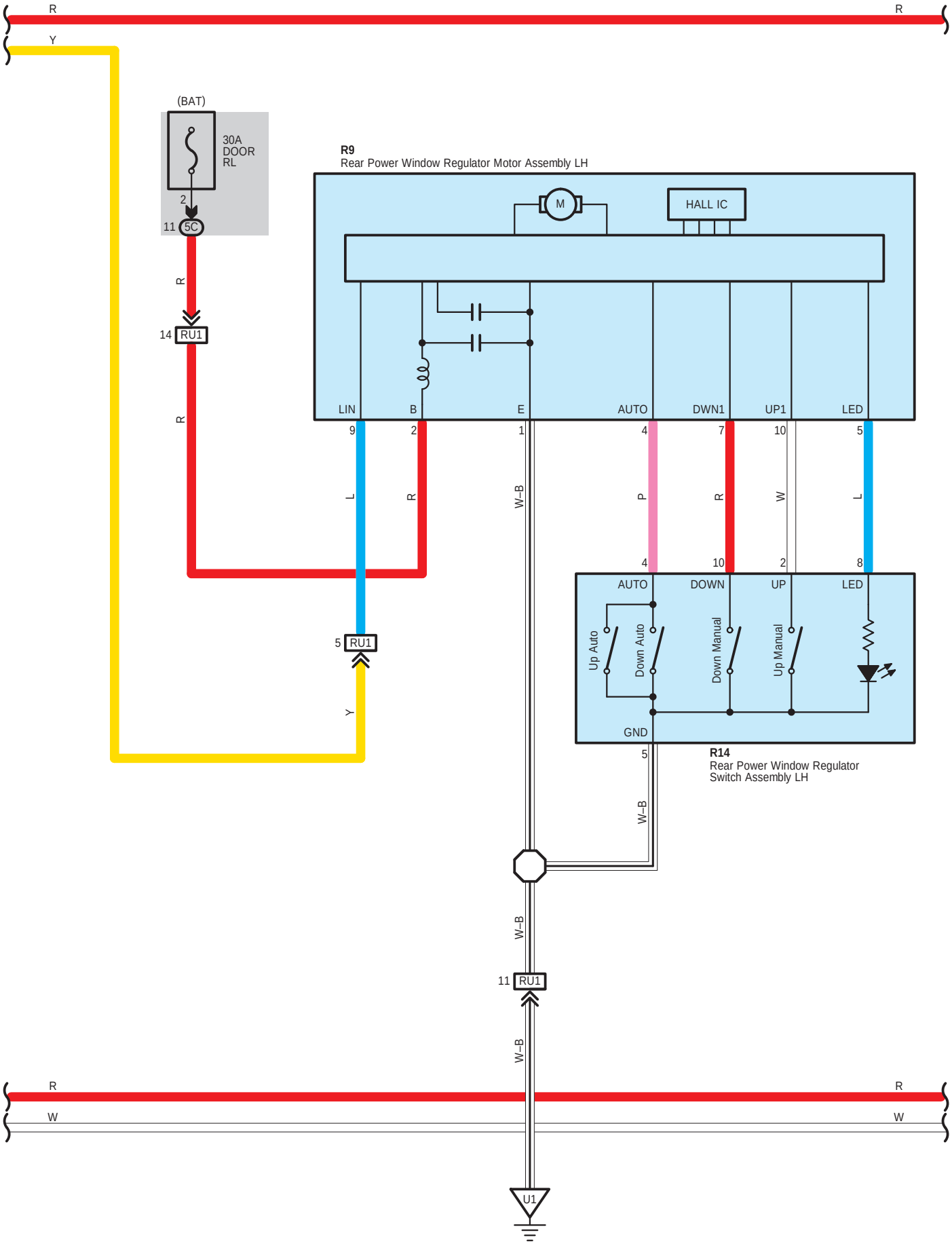
R
R
Y
(BAT)
30A
DOOR
RL
2
11
5C
R
14
RU1
R
R9
Rear Power Window Regulator Motor Assembly LH
M
HALL IC
LIN
B
E
AUTO
DWN1
UP1
LED
9
2
1
4
7
10
5
L
R
W-B
P
R
W
L
4
10
2
8
AUTO
DOWN
UP
LED
Up Auto
Down Auto
Down Manual
Up Manual
GND
5
R14
Rear Power Window Regulator
Switch Assembly LH
5
RU1
Y
W-B
W-B
11
RU1
W-B
R
R
W
W
U1

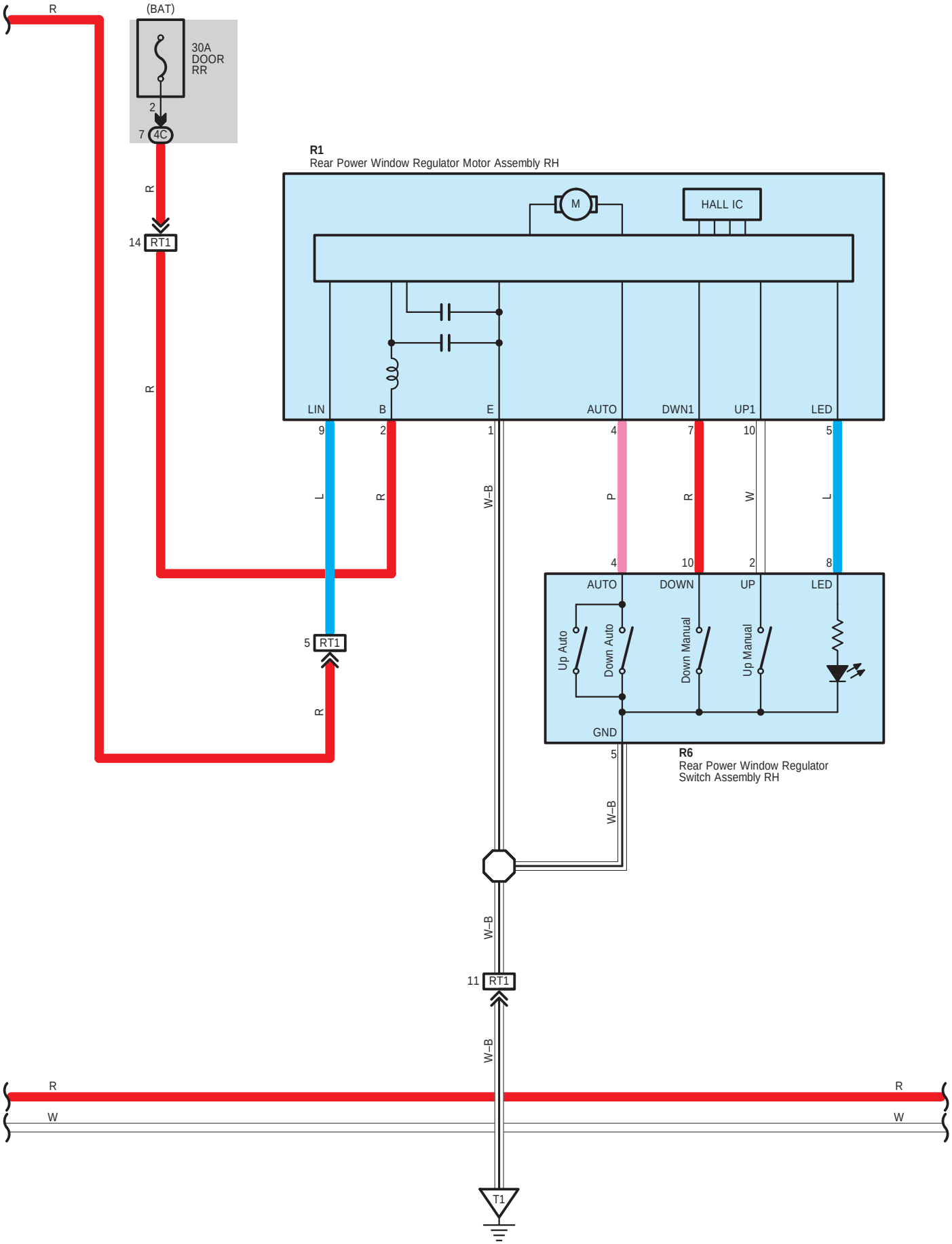
R
(BAT)
30A
DOOR
RR
2
7
4C
R
14
RT1
R
R1
Rear Power Window Regulator Motor Assembly RH
M
HALL IC
LIN
B
E
AUTO
DWN1
UP1
LED
9
2
1
4
7
10
5
L
R
W–B
P
R
W
L
4
10
2
8
AUTO
DOWN
UP
LED
Up Auto
Down Auto
Down Manual
Up Manual
GND
5
R6
Rear Power Window Regulator
Switch Assembly RH
5
RT1
R
W–B
W–B
11
RT1
W–B
R
W
R
W
T1

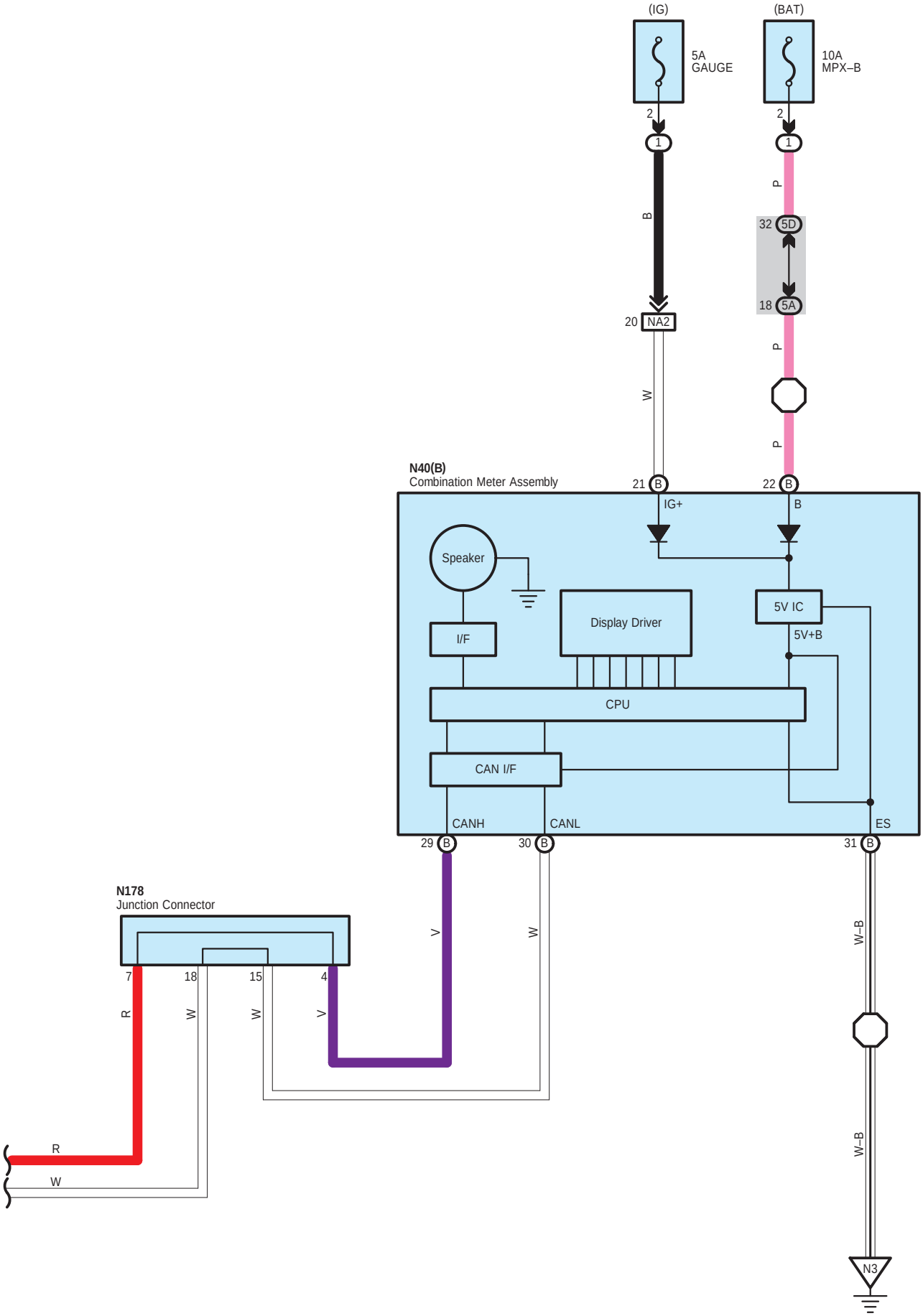
(IG)
(BAT)
5A
GAUGE
10A
MPX–B
2
1
B
P
32
5D
18
5A
20
NA2
W
N40(B)
Combination Meter Assembly
21
22
IG+
B
Speaker
Display Driver
5V IC
5V+B
I/F
CPU
CAN I/F
CANH
CANL
ES
29
30
31
N178
Junction Connector
7
18
15
4
R
V
W–B
N3

N 12
White

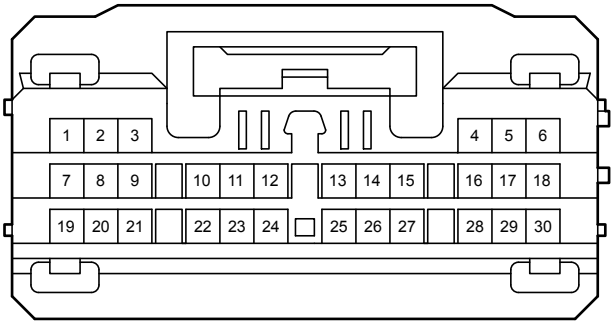

N 13
White

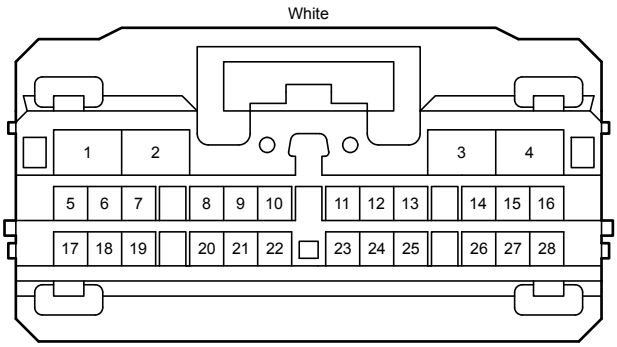

N 40
Black

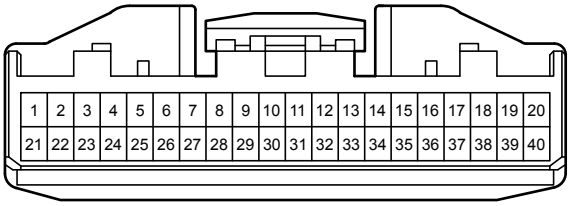

N178
Gray

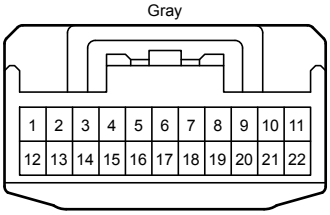

Q 2
White

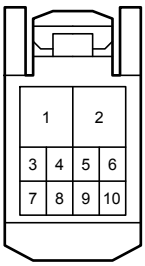

Q 3
White

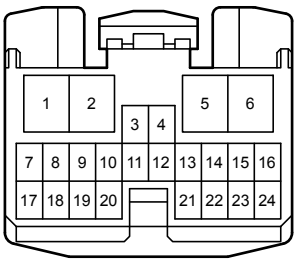

Q 4
White

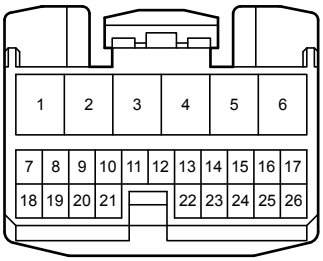

Q 9
White

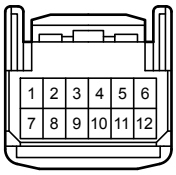

Q 17
White

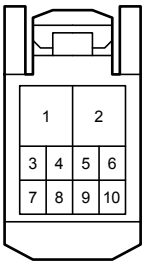

Q 18
White

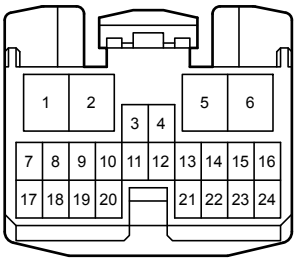

Q 19
White

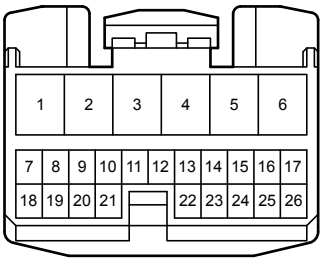

Q 22
White

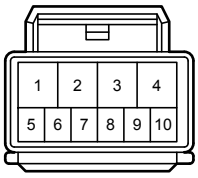

Q 25
White

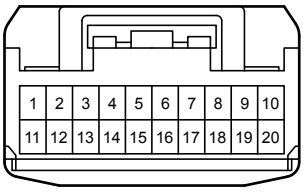

R 1
White

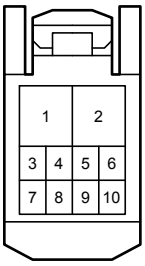

R 6
White

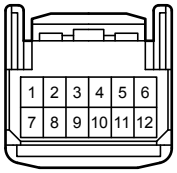

R 9
White

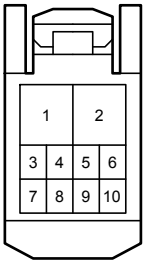

R 14
White

T 6
Black

U 8
Black

4A
White

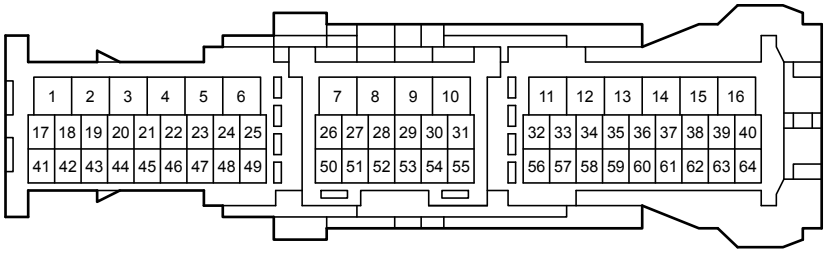

4C
White

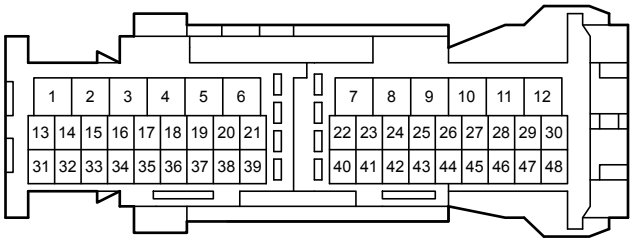

5A
White

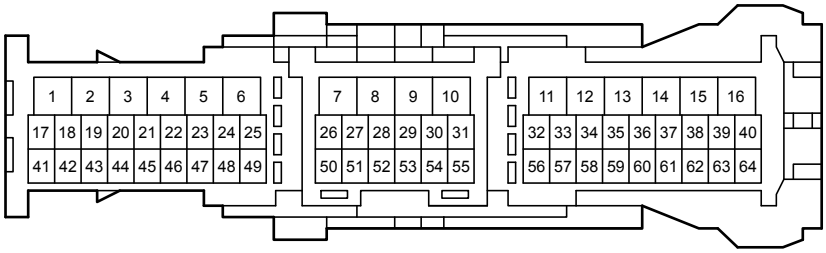

5B
White

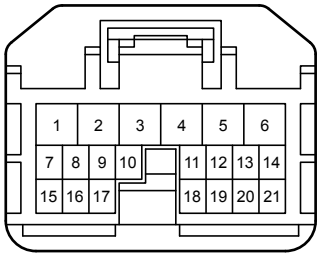

5C
White

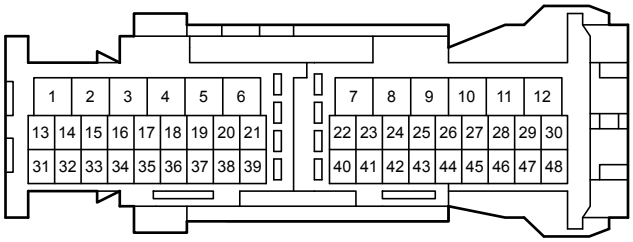

5D
White

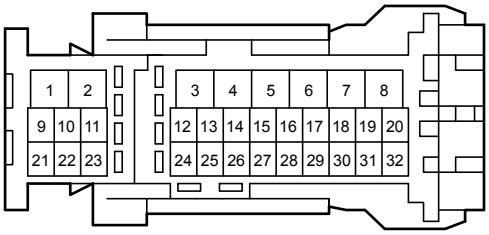

NA2
White

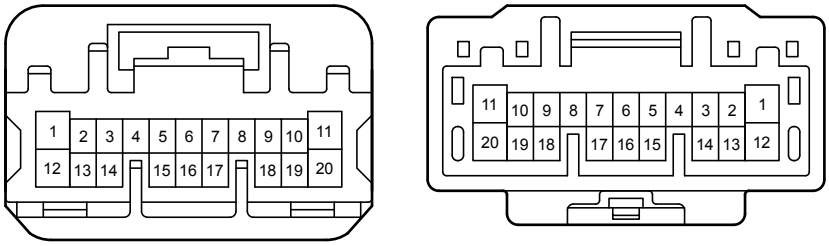

QT1
White

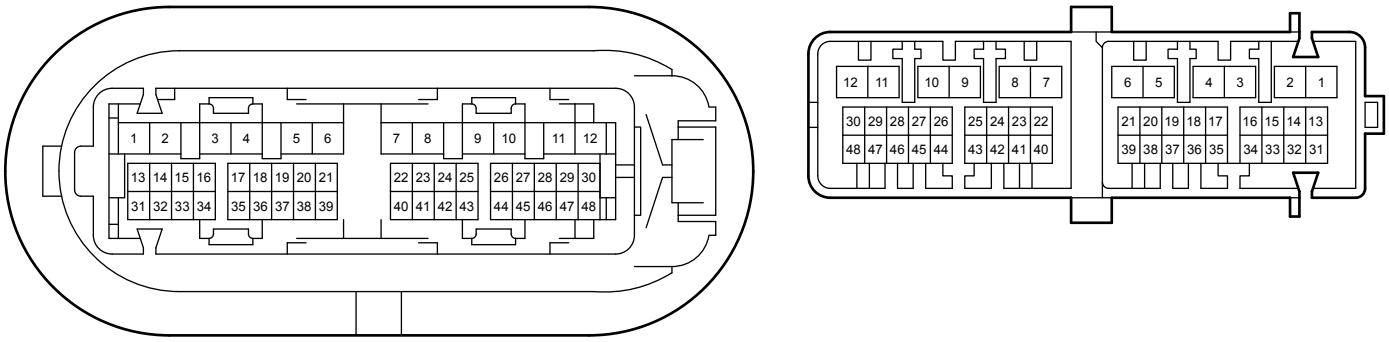

QU1
White

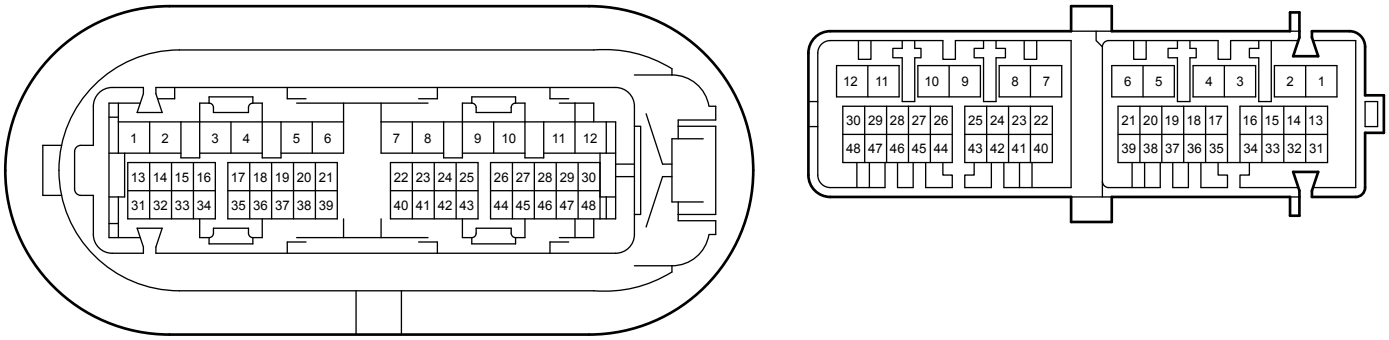

RT1
White

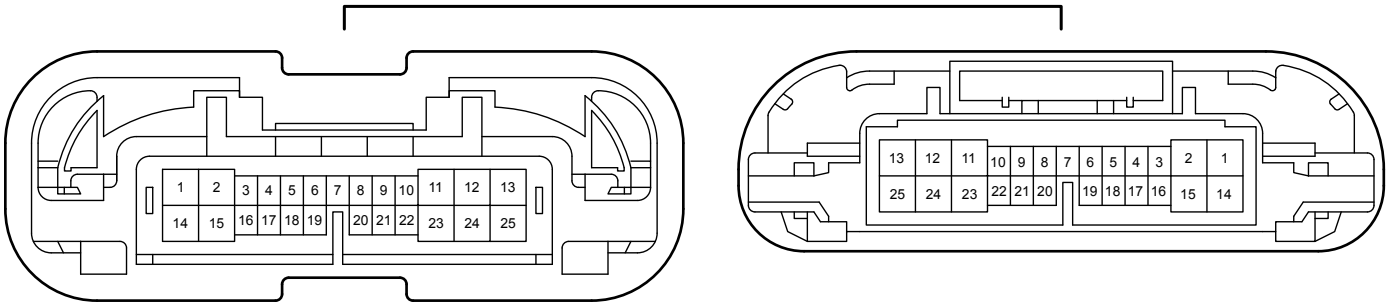

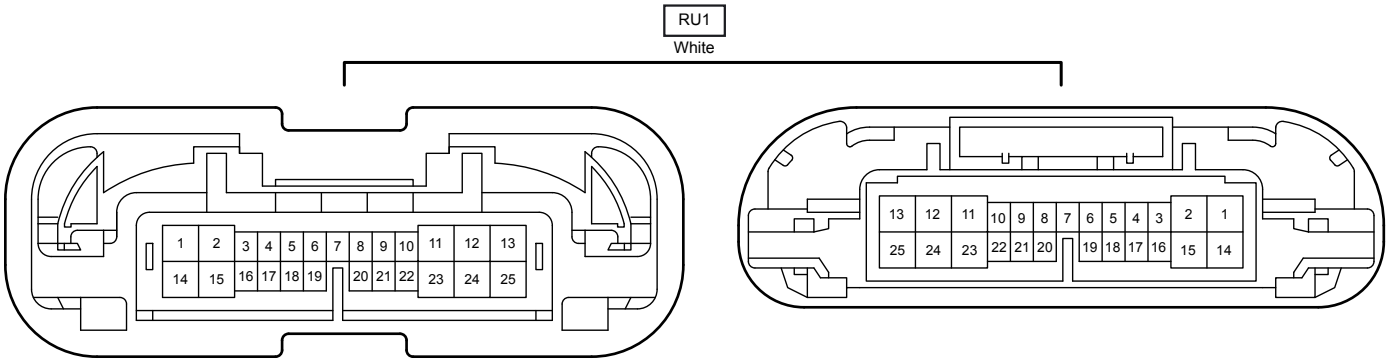
RU1
White
1 2 3 4 5 6 7 8 9 10 11 12 13
14 15 16 17 18 19 20 21 22 23 24 25
13 12 11 10 9 8 7 6 5 4 3 2 1
25 24 23 22 21 20 19 18 17 16 15 14