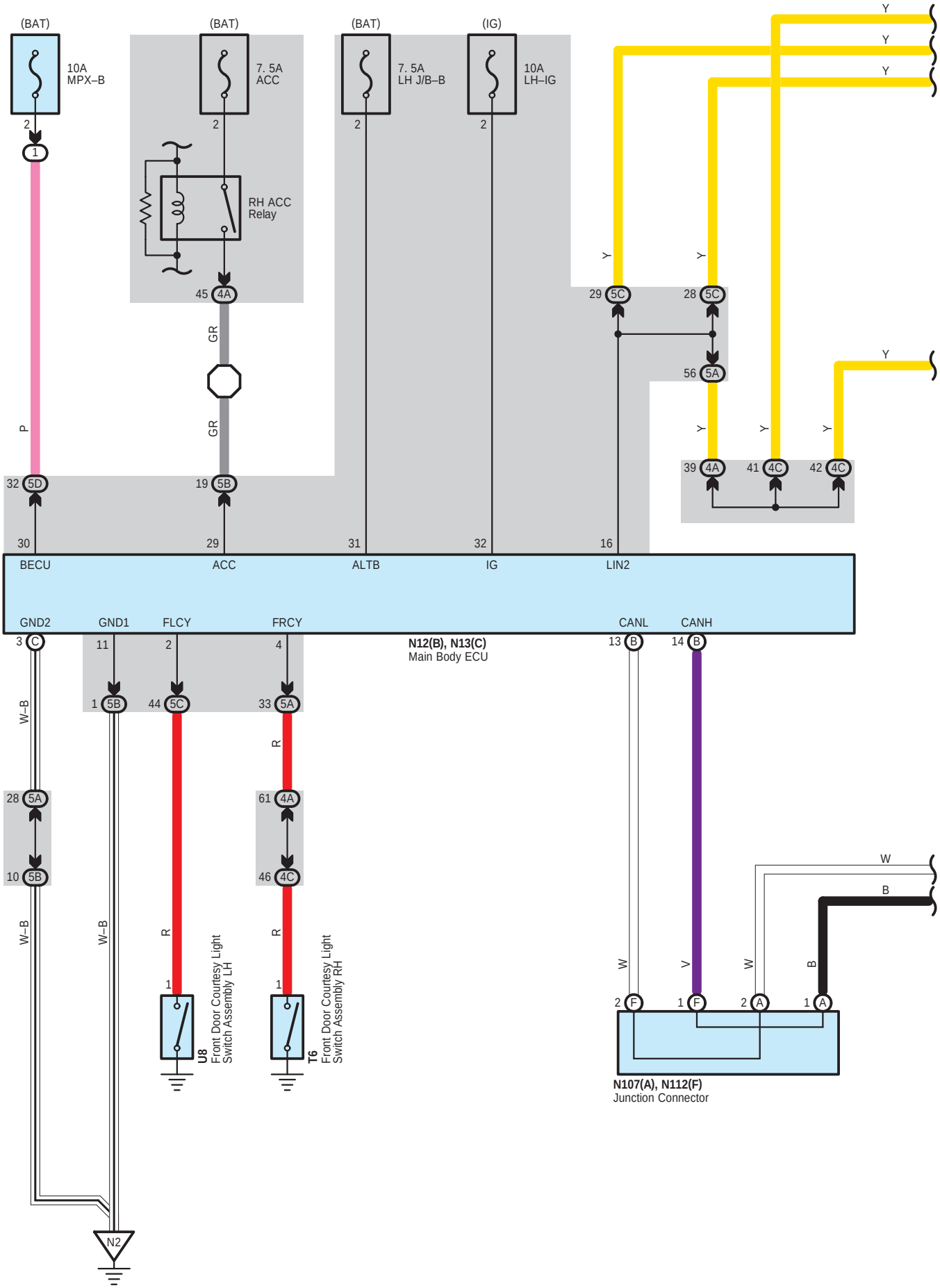
(BAT)
10A
MPX–B
(BAT)
7. 5A
ACC
RH ACC
Relay
(BAT)
7. 5A
LH J/B–B
(IG)
10A
LH–IG
BECU
ACC
ALTB
IG
LIN2
GND2
GND1
FLCY
FRCY
CANL
CANH
N12(B), N13(C)
Main Body ECU
U8
Front Door Courtesy Light
Switch Assembly LH
T6
Front Door Courtesy Light
Switch Assembly RH
N107(A), N112(F)
Junction Connector
N2

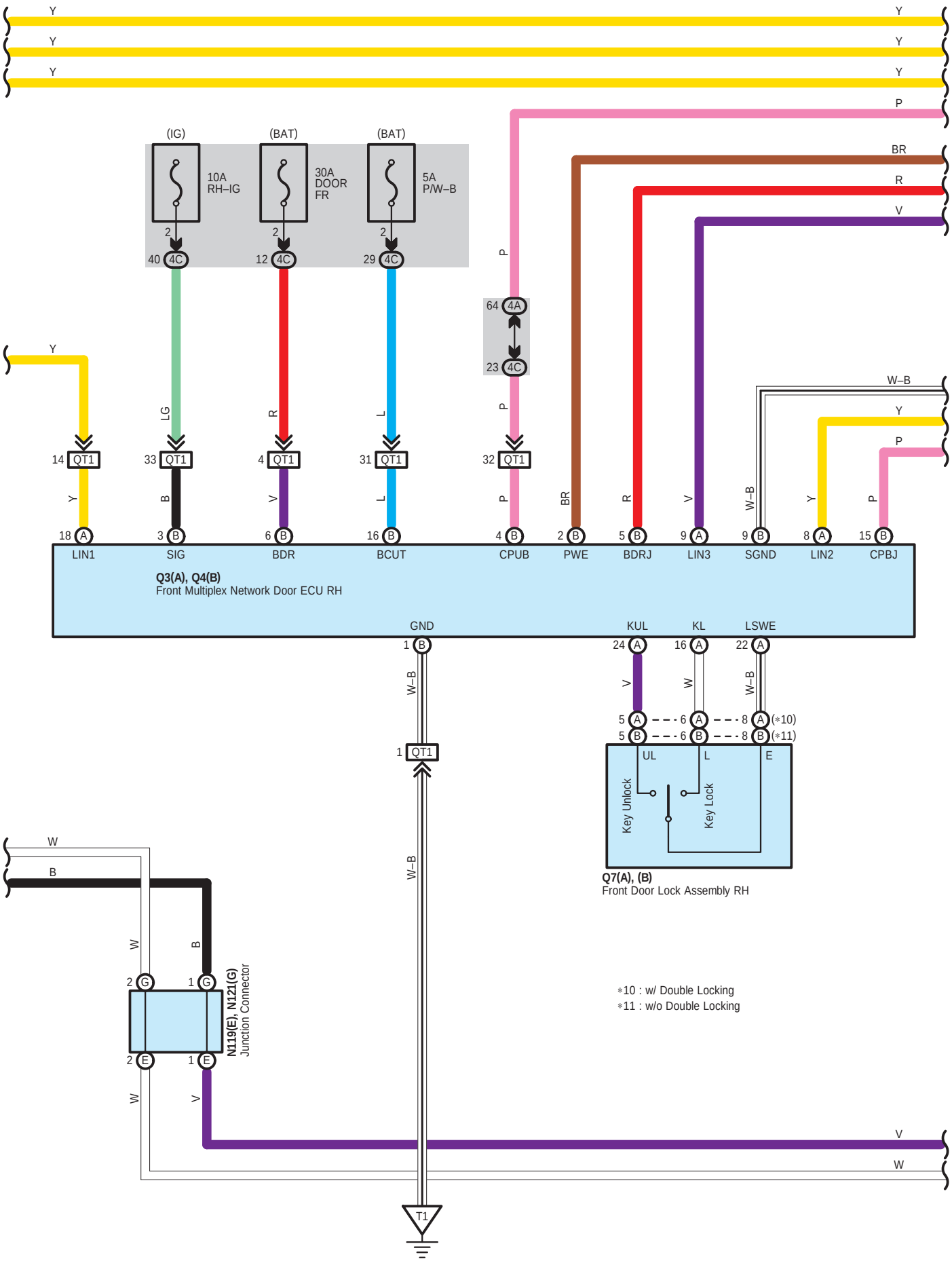
(IG)
(BAT)
(BAT)
10A RH–IG
30A DOOR FR
5A P/W–B
40 4C
12 4C
29 4C
64 4A
23 4C
14 QT1
33 QT1
4 QT1
31 QT1
32 QT1
18 A LIN1
3 B SIG
6 B BDR
16 B BCUT
4 B CPUB
2 B PWE
5 B BDRJ
9 A LIN3
9 B SGND
8 A LIN2
15 B CPBJ
Q3(A), Q4(B)
Front Multiplex Network Door ECU RH
GND
KUL
KL
LSWE
1 B
24 A
16 A
22 A
1 QT1
5 A
6 A
8 A (*10)
5 B
6 B
8 B (*11)
UL
L
E
Key Unlock
Key Lock
Q7(A), (B)
Front Door Lock Assembly RH
2 G
1 G
2 E
1 E
N119(E), N121(G)
Junction Connector
T1
*10 : w/ Double Locking
*11 : w/o Double Locking

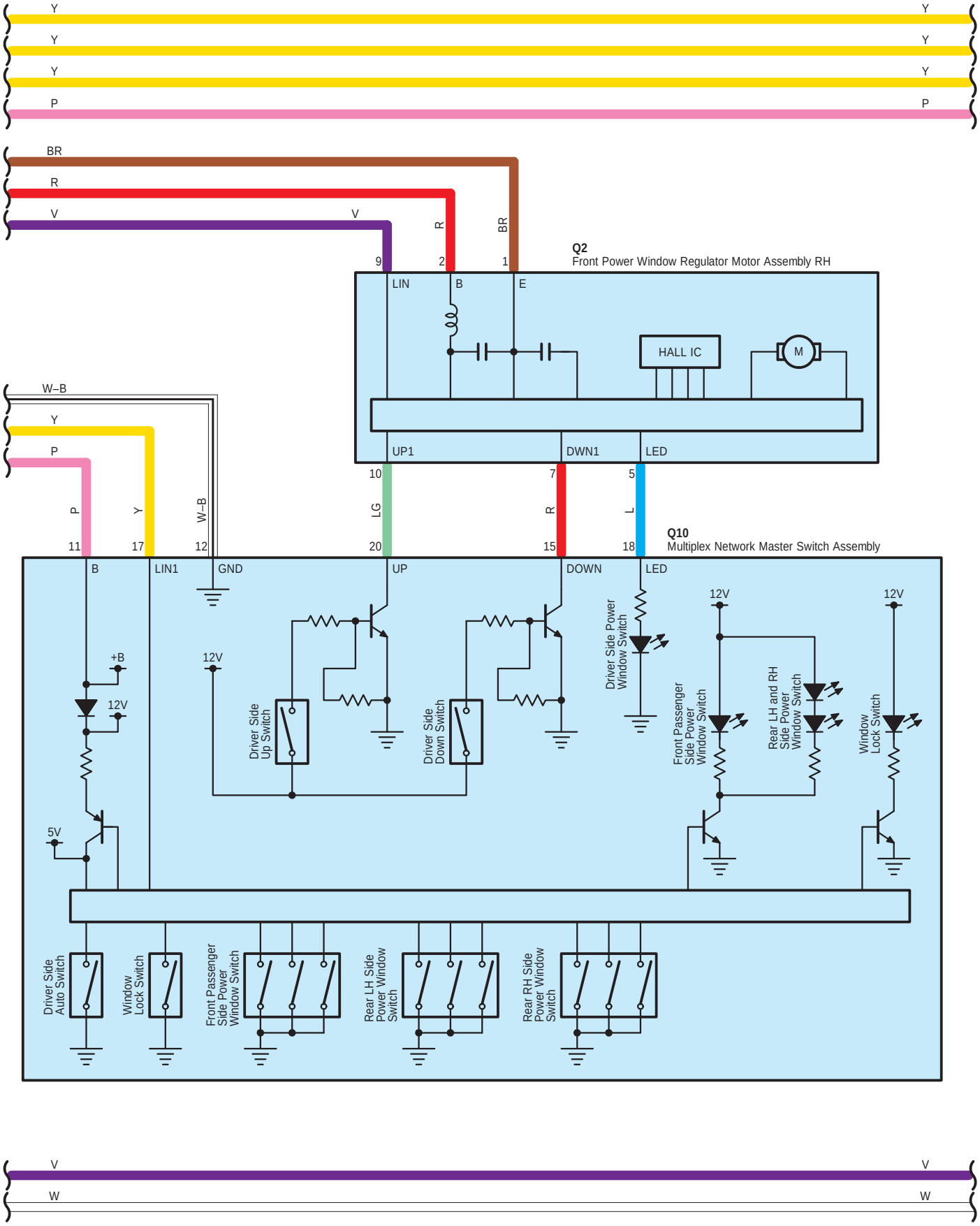
Y
Y
Y
P
BR
R
V
V
R
BR
9
2
1
Q2
Front Power Window Regulator Motor Assembly RH
LIN
B
E
HALL IC
M
W–B
Y
P
UP1
DWN1
LED
10
7
5
P
Y
W–B
LG
R
L
11
17
12
20
15
18
Q10
Multiplex Network Master Switch Assembly
B
LIN1
GND
UP
DOWN
LED
+B
12V
12V
5V
Driver Side Up Switch
Driver Side Down Switch
Driver Side Power Window Switch
12V
12V
Front Passenger Side Power Window Switch
Rear LH and RH Side Power Window Switch
Window Lock Switch
Driver Side Auto Switch
Window Lock Switch
Front Passenger Side Power Window Switch
Rear LH Side Power Window Switch
Rear RH Side Power Window Switch
V
V
W
W

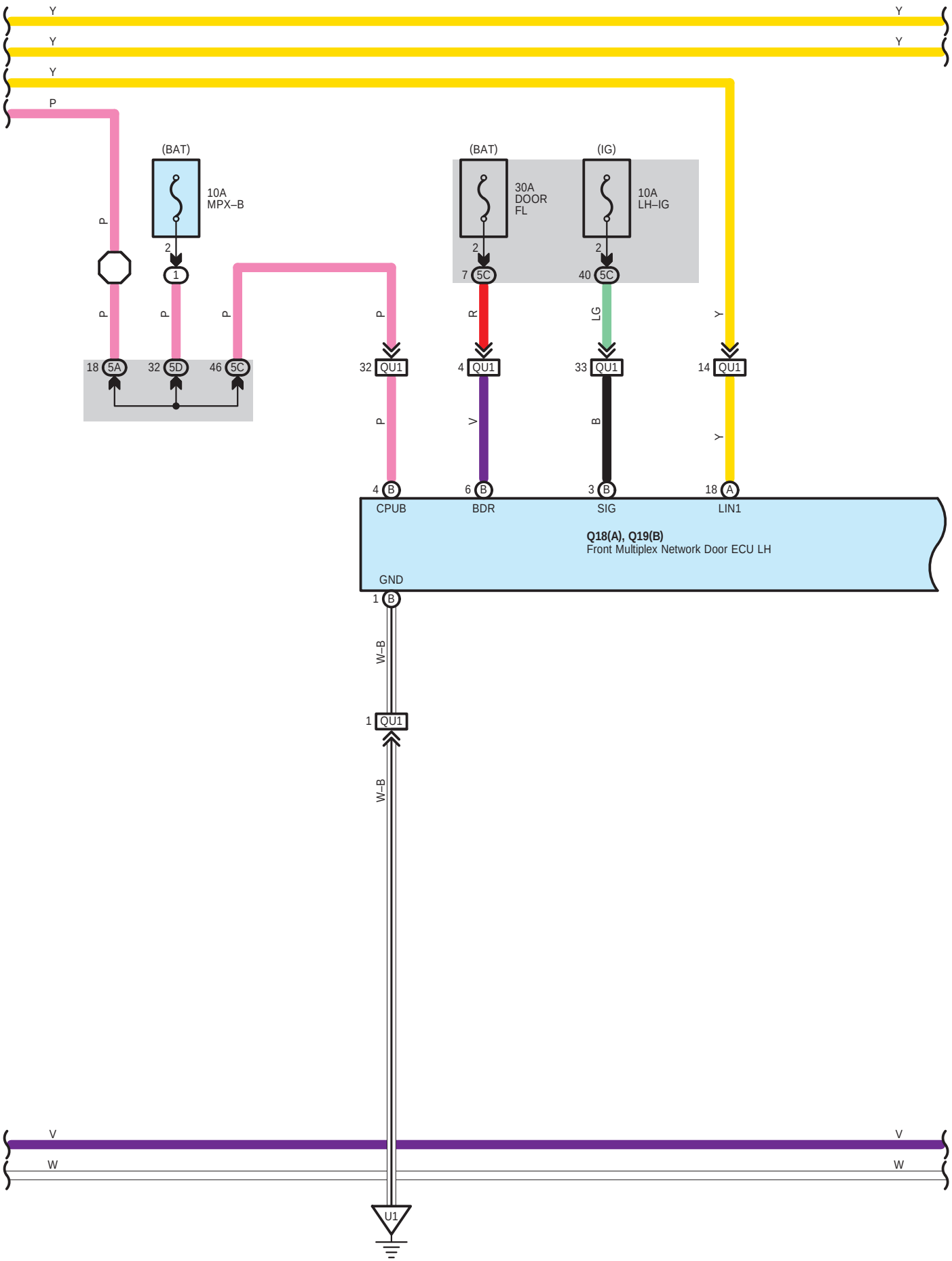
Y
Y
Y
Y
Y
P
(BAT)
10A
MPX–B
2
1
P
P
P
P
P
18 5A
32 5D
46 5C
(BAT)
30A
DOOR
FL
2
7 5C
(IG)
10A
LH–IG
2
40 5C
R
LG
Y
32 QU1
4 QU1
33 QU1
14 QU1
P
V
B
Y
4 B
CPUB
6 B
BDR
3 B
SIG
18 A
LIN1
Q18(A), Q19(B)
Front Multiplex Network Door ECU LH
GND
1 B
W–B
1 QU1
W–B
V
V
W
W
U1

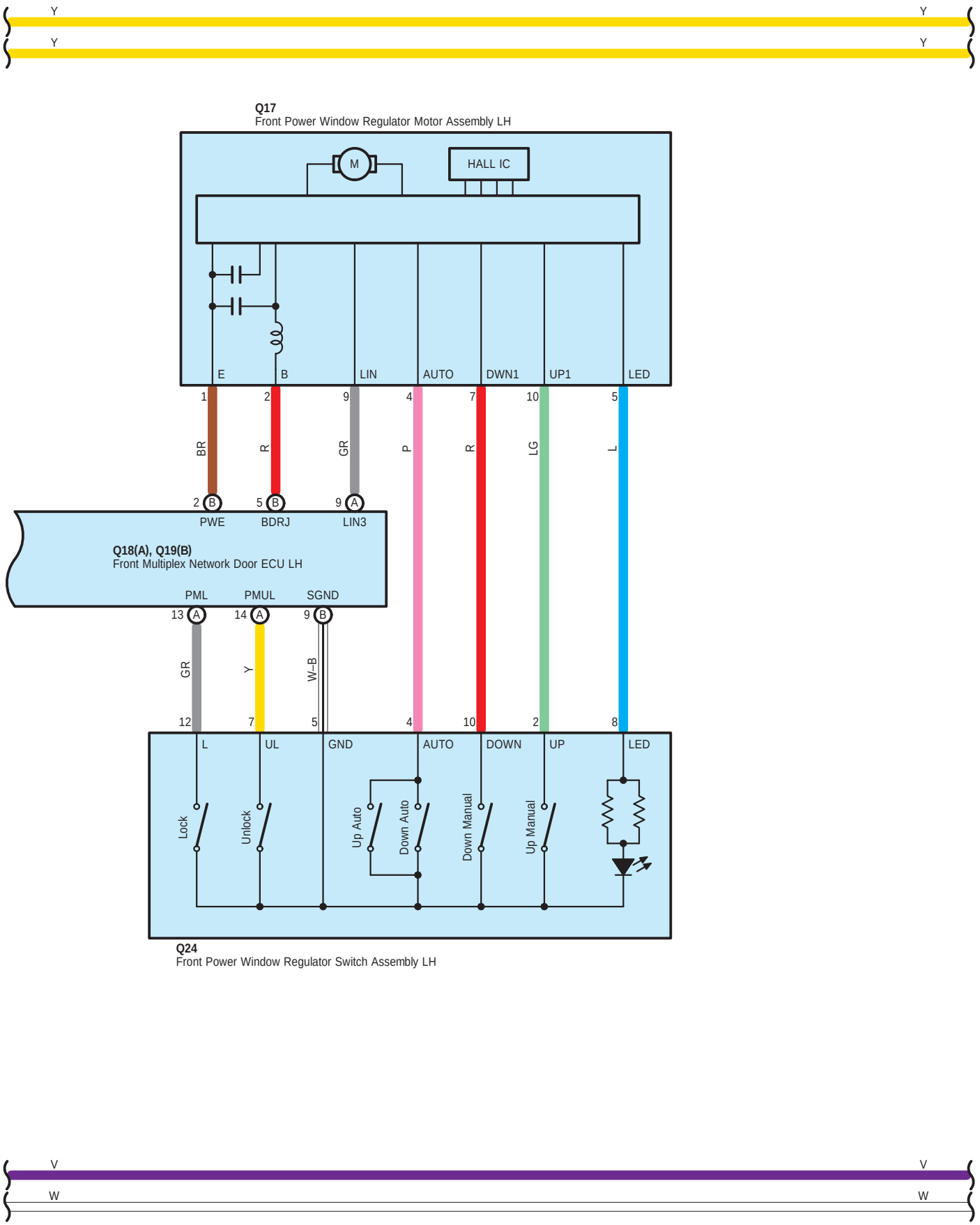
Y
Y
Y
Y
Q17
Front Power Window Regulator Motor Assembly LH
M
HALL IC
E
B
LIN
AUTO
DWN1
UP1
LED
1
2
9
4
7
10
5
BR
R
GR
P
R
LG
L
2 B
5 B
9 A
PWE
BDRJ
LIN3
Q18(A), Q19(B)
Front Multiplex Network Door ECU LH
PML
PMUL
SGND
13 A
14 A
9 B
GR
Y
W–B
12
7
5
4
10
2
8
L
UL
GND
AUTO
DOWN
UP
LED
Lock
Unlock
Up Auto
Down Auto
Down Manual
Up Manual
Q24
Front Power Window Regulator Switch Assembly LH
V
V
W
W

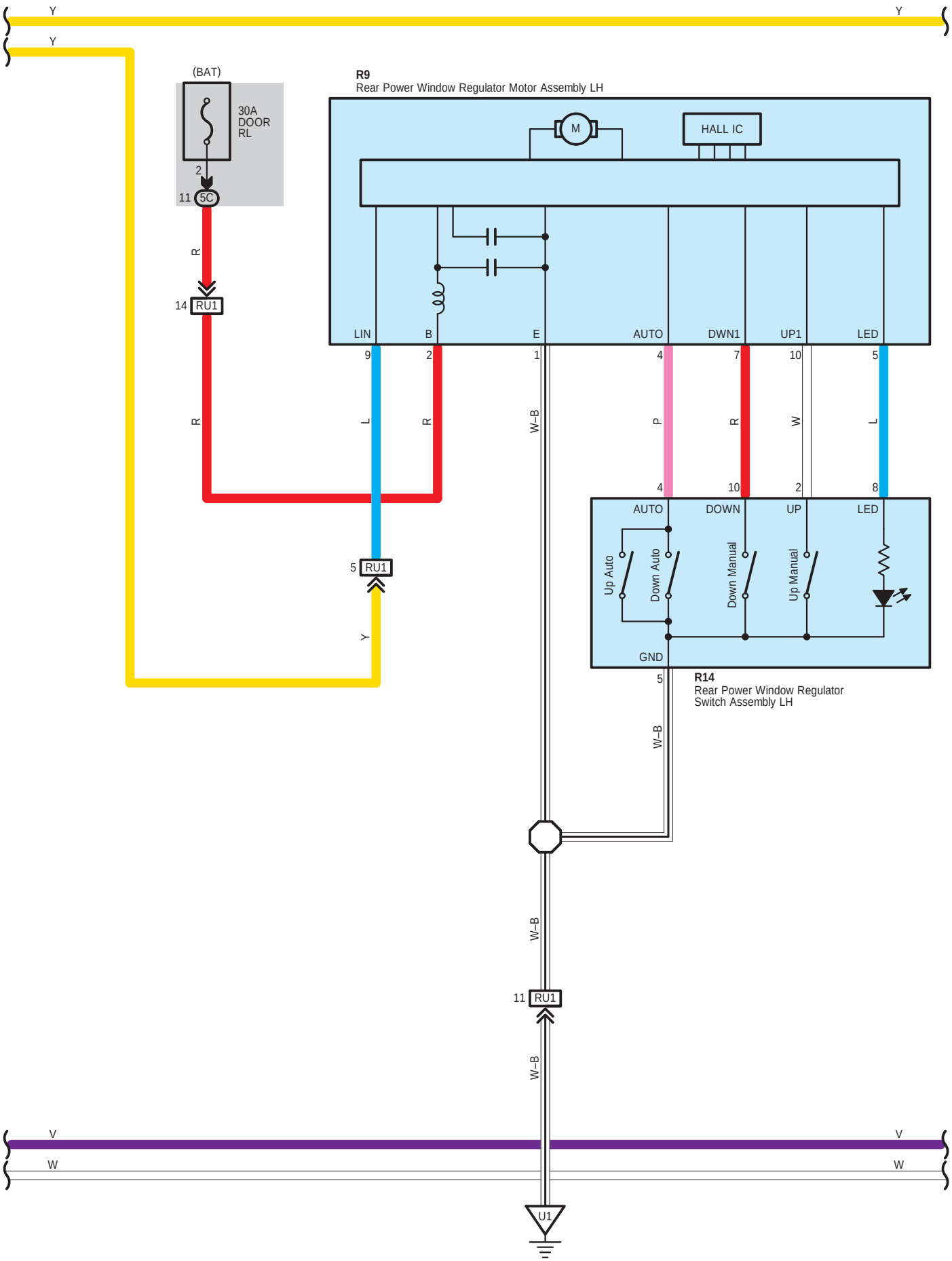
Y
Y
Y
(BAT)
30A
DOOR
RL
2
11
5C
R
14
RU1
R
R9
Rear Power Window Regulator Motor Assembly LH
M
HALL IC
LIN
B
E
AUTO
DWN1
UP1
LED
9
2
1
4
7
10
5
L
R
W-B
P
R
W
L
4
10
2
8
AUTO
DOWN
UP
LED
Up Auto
Down Auto
Down Manual
Up Manual
GND
5
RU1
Y
5
R14
Rear Power Window Regulator
Switch Assembly LH
W-B
W-B
11
RU1
W-B
V
V
W
W
U1

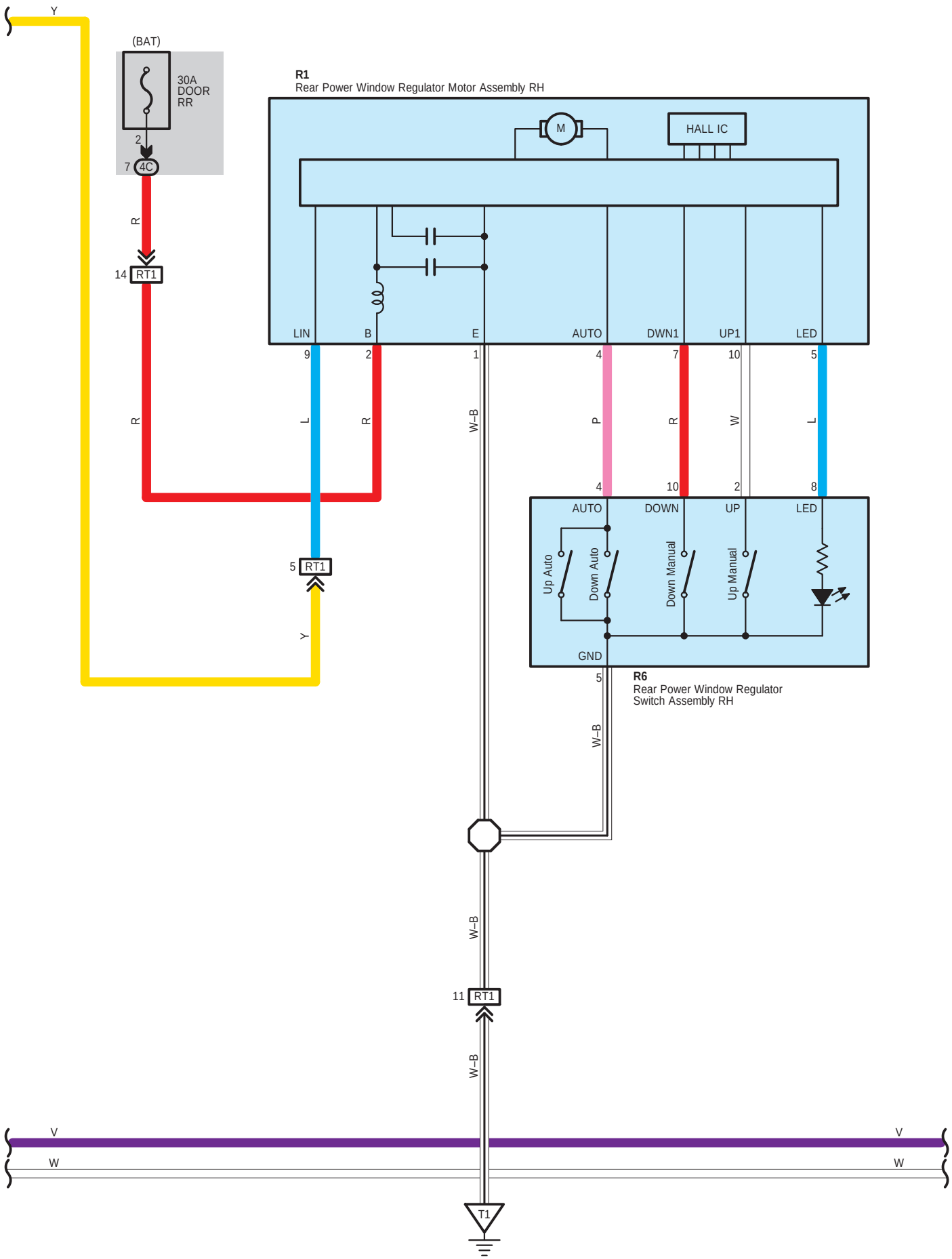
Y
(BAT)
30A
DOOR
RR
2
7 4C
R
14 RT1
R1
Rear Power Window Regulator Motor Assembly RH
M
HALL IC
LIN
B
E
AUTO
DWN1
UP1
LED
9
2
1
4
7
10
5
R
L
R
W-B
P
R
W
L
4
10
2
8
AUTO
DOWN
UP
LED
Up Auto
Down Auto
Down Manual
Up Manual
GND
5 RT1
Y
5
R6
Rear Power Window Regulator
Switch Assembly RH
W-B
W-B
11 RT1
W-B
V
V
W
W
T1

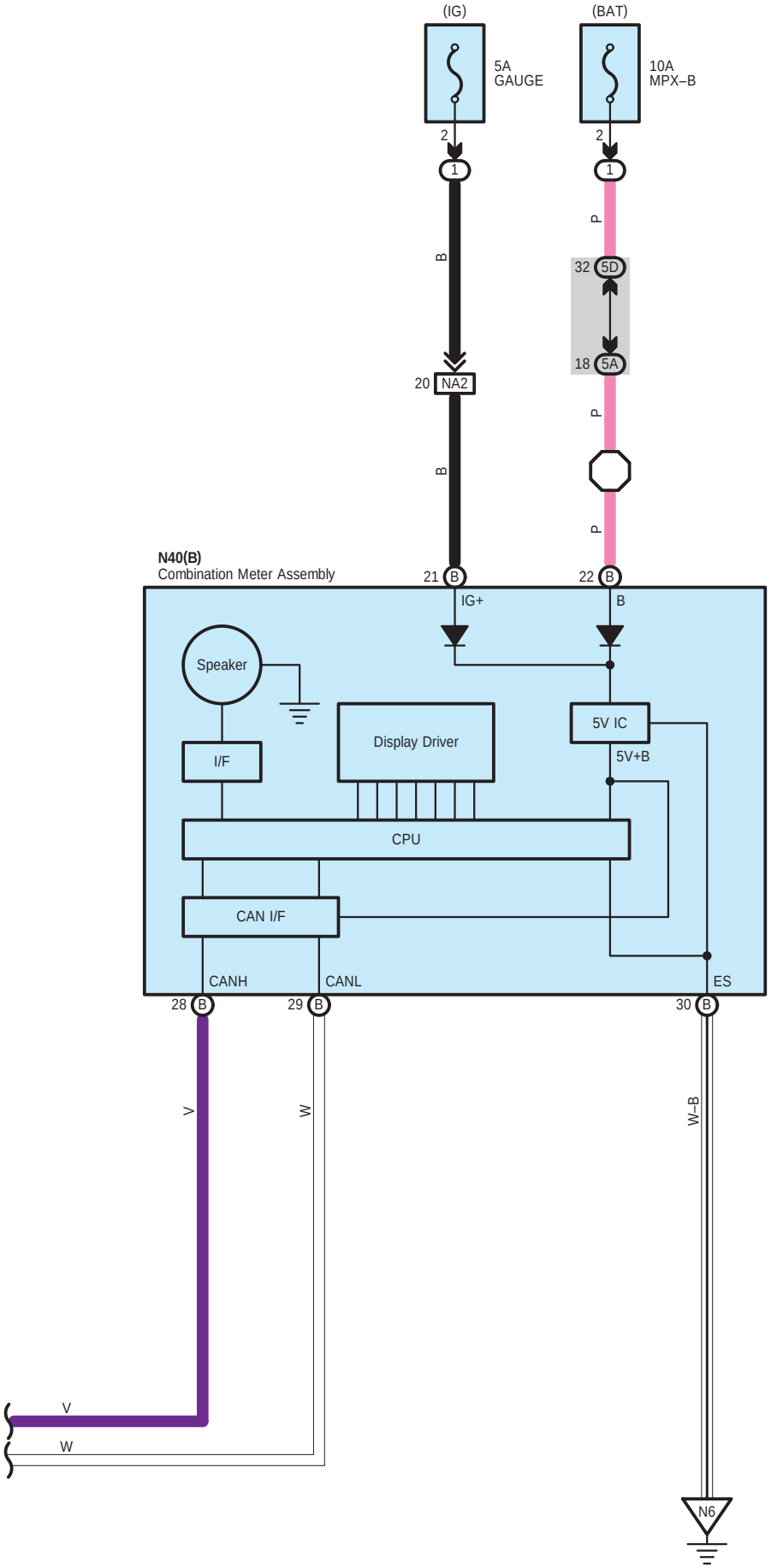
(IG)
(BAT)
5A
GAUGE
10A
MPX–B
2
1
B
P
32 5D
18 5A
20 NA2
N40(B)
Combination Meter Assembly
21 B
22 B
IG+
B
Speaker
I/F
Display Driver
5V IC
5V+B
CPU
CAN I/F
CANH
CANL
ES
28 B
29 B
30 B
V
W
W–B
N6

N 12
White

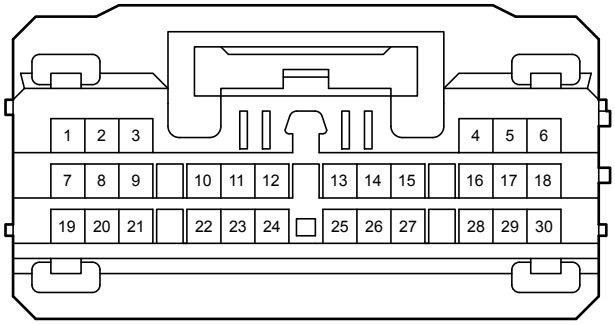

N 13
White

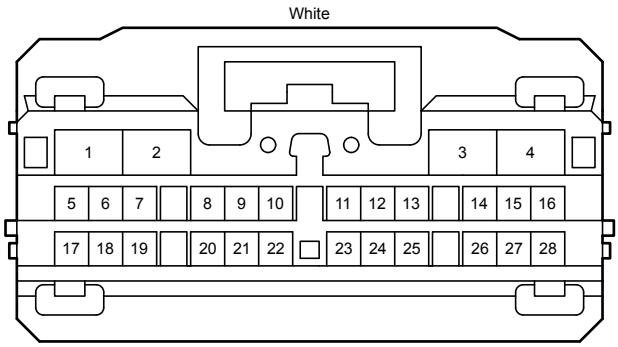

N 40
Black

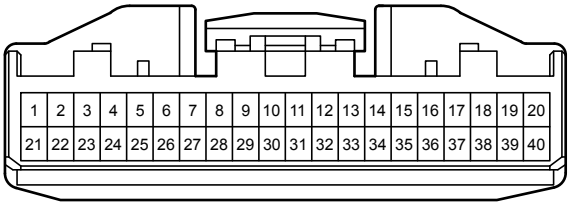

N107
White

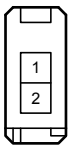

N112
White

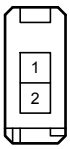

N119
White

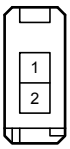

N121
White

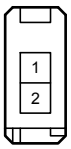

Q 2
White

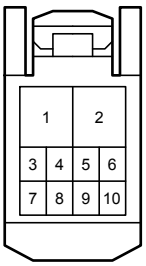

Q 3
White

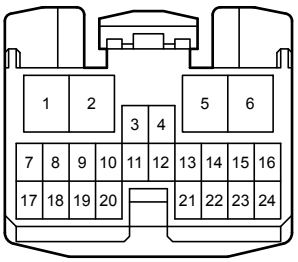

Q 4
White

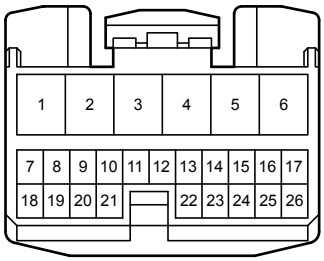

Q 7
White

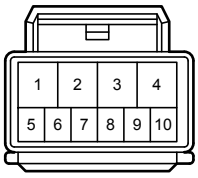

Q 10
White

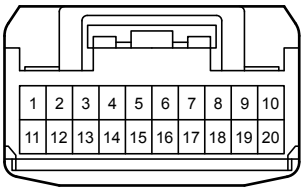

Q 17
White

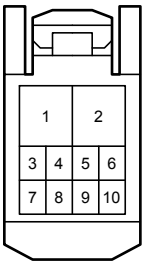

Q 18
White

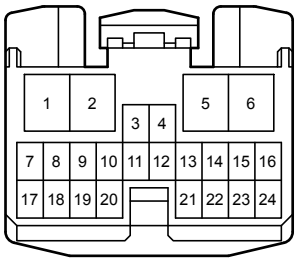

Q 19
White

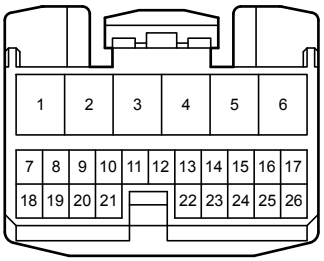

Q 24
White

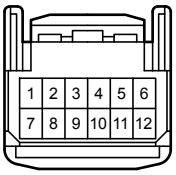

R 1
White

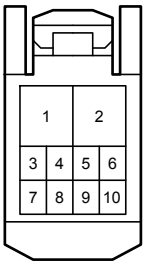

R 6
White

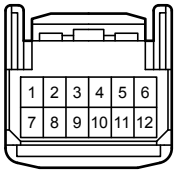

R 9
White

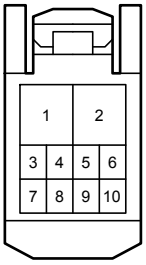

R 14
White

T 6
Black

U 8
Black

4A
White

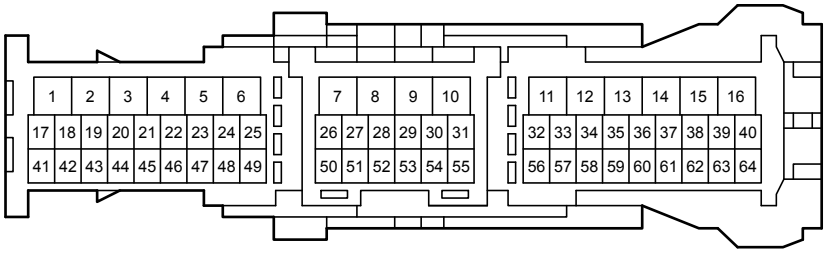

4C
White

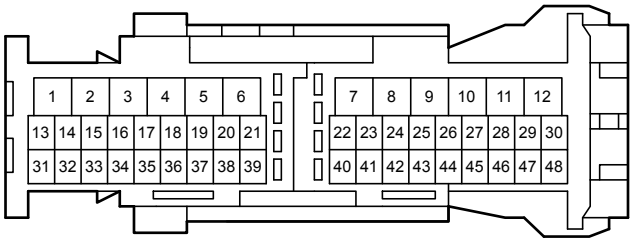

5A
White

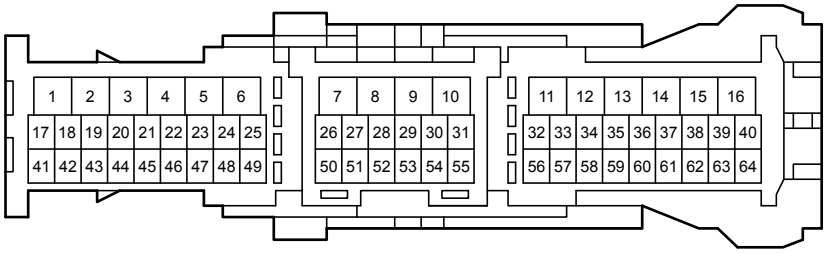

5B
White

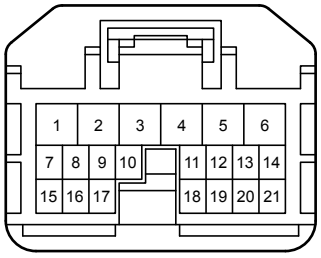

5C
White

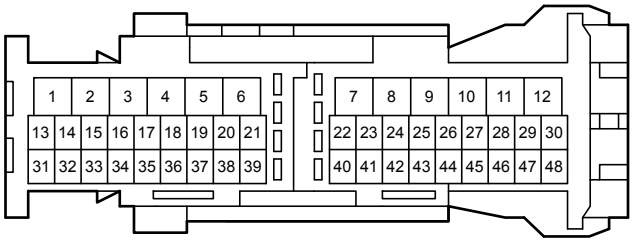

5D
White

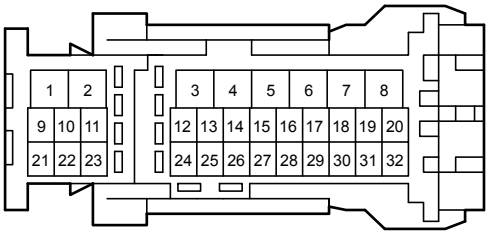

NA2
White

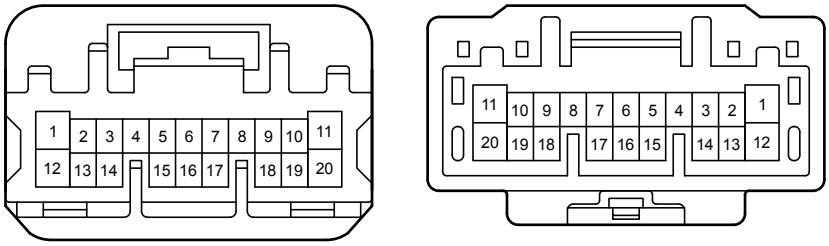

QT1
White

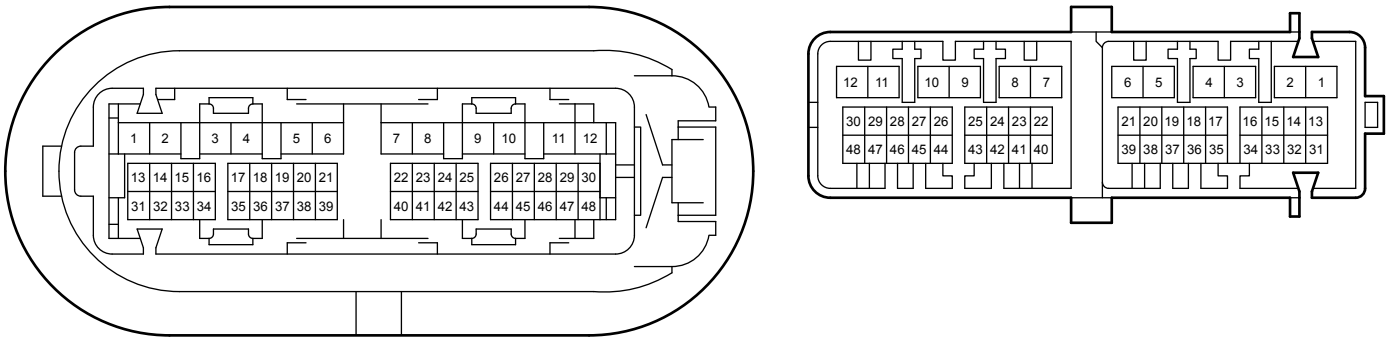

QU1
White

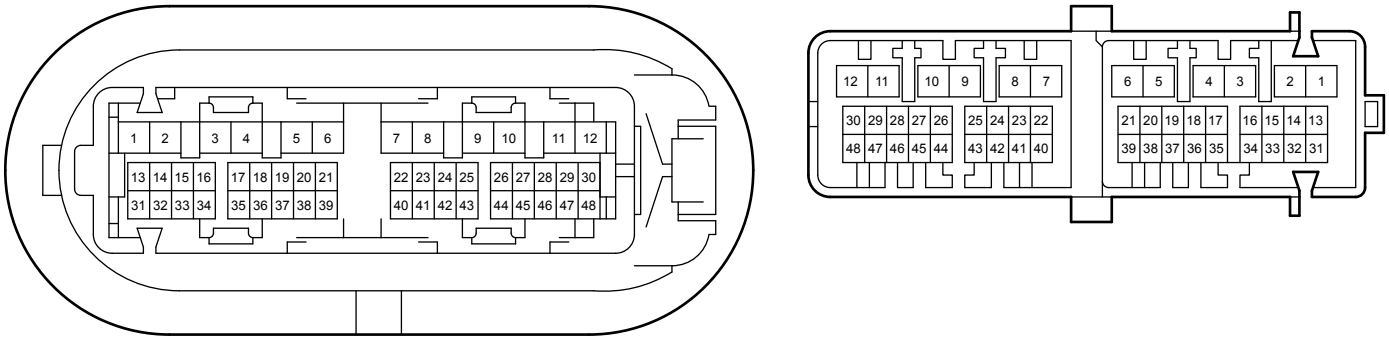

RT1
White

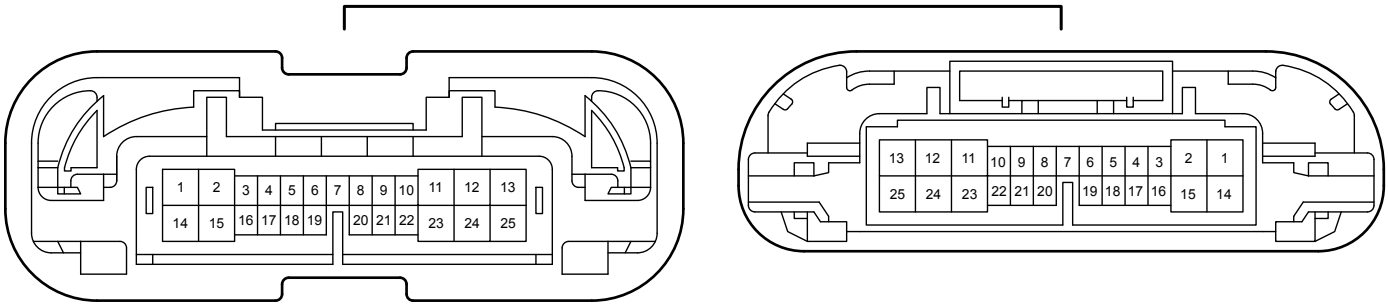

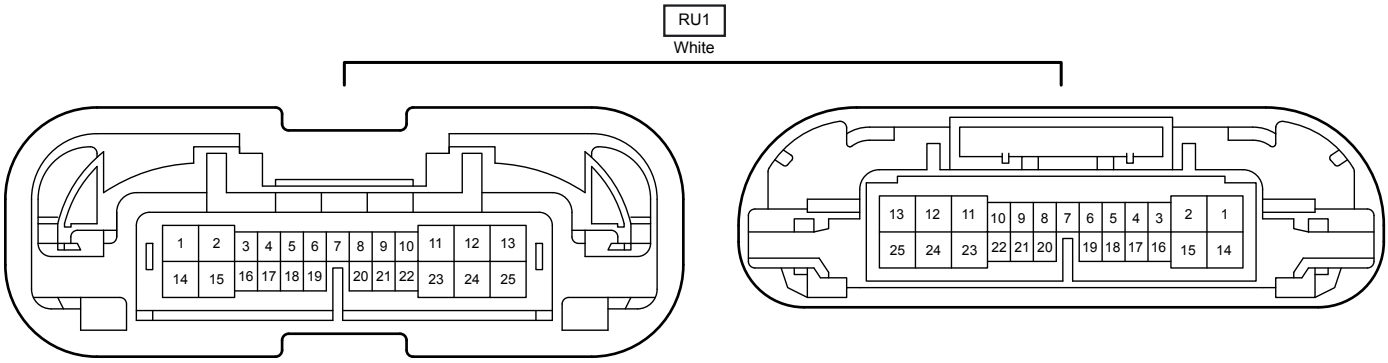
RU1
White
1 2 3 4 5 6 7 8 9 10 11 12 13
14 15 16 17 18 19 20 21 22 23 24 25
13 12 11 10 9 8 7 6 5 4 3 2 1
25 24 23 22 21 20 19 18 17 16 15 14