[Cowl Side J/B LH Inner Circuit]

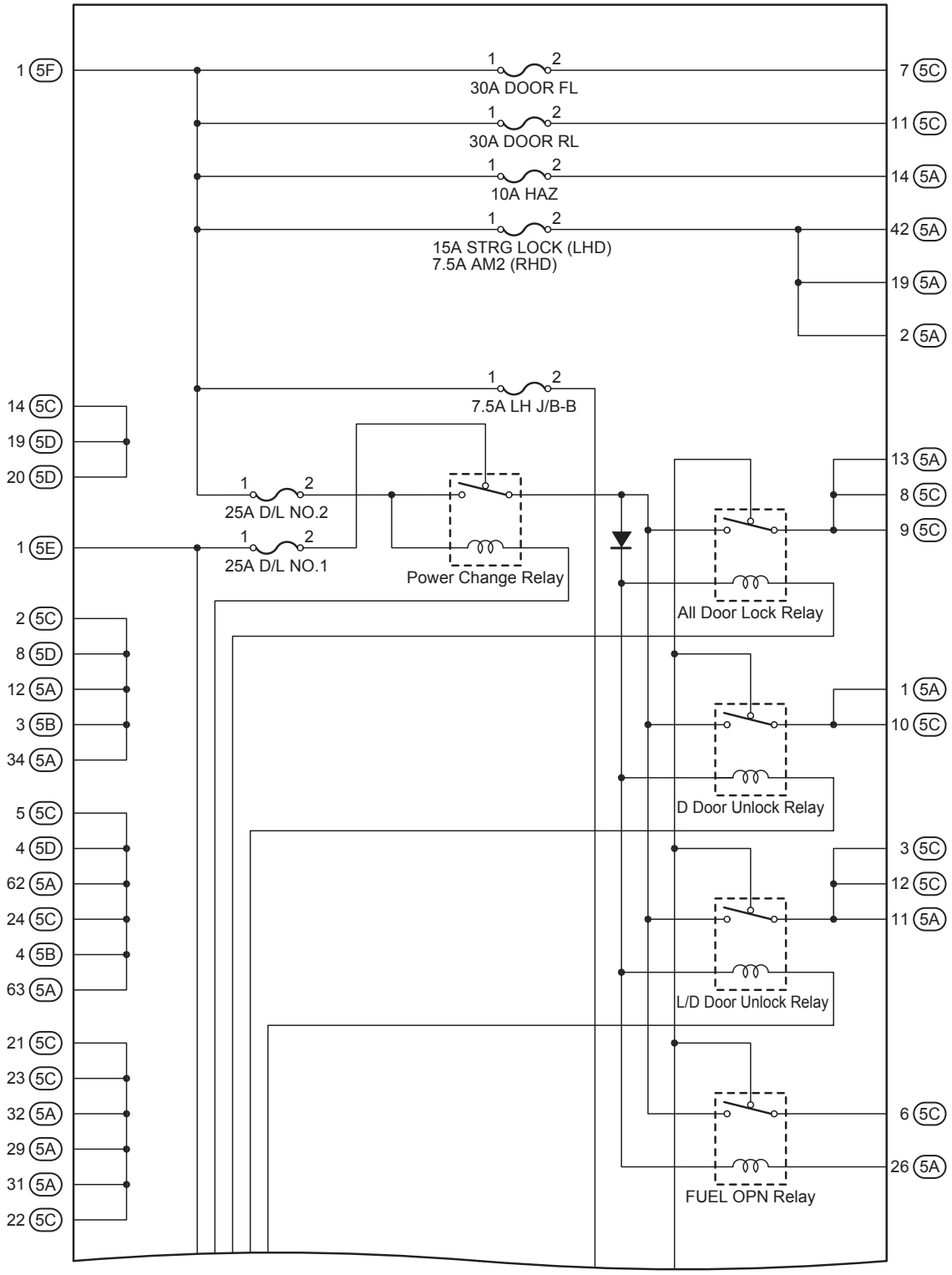

(Cont. Next Page)

(Cont'd)

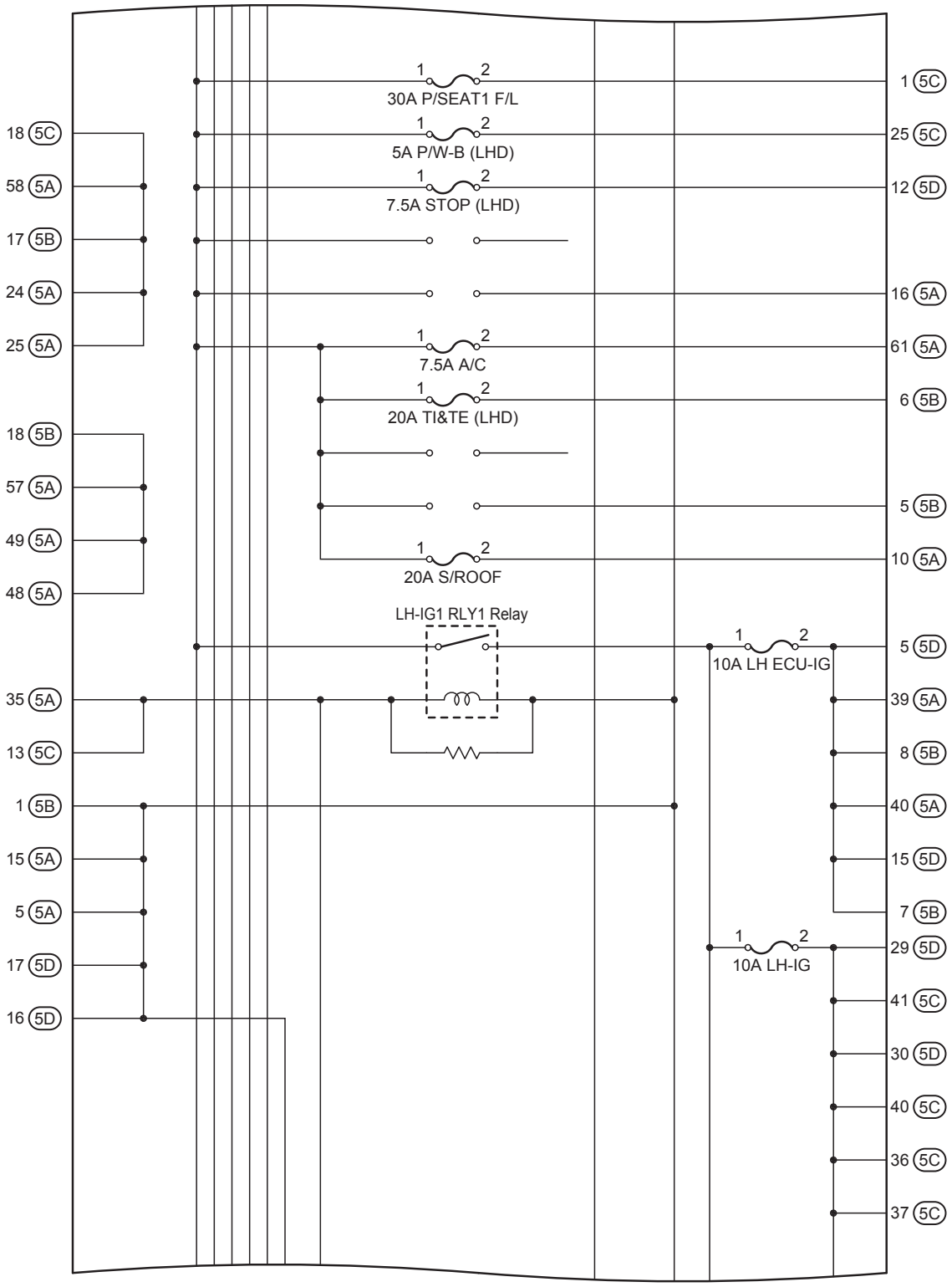

(Cont. Next Page)

[Cowl Side J/B LH Inner Circuit]

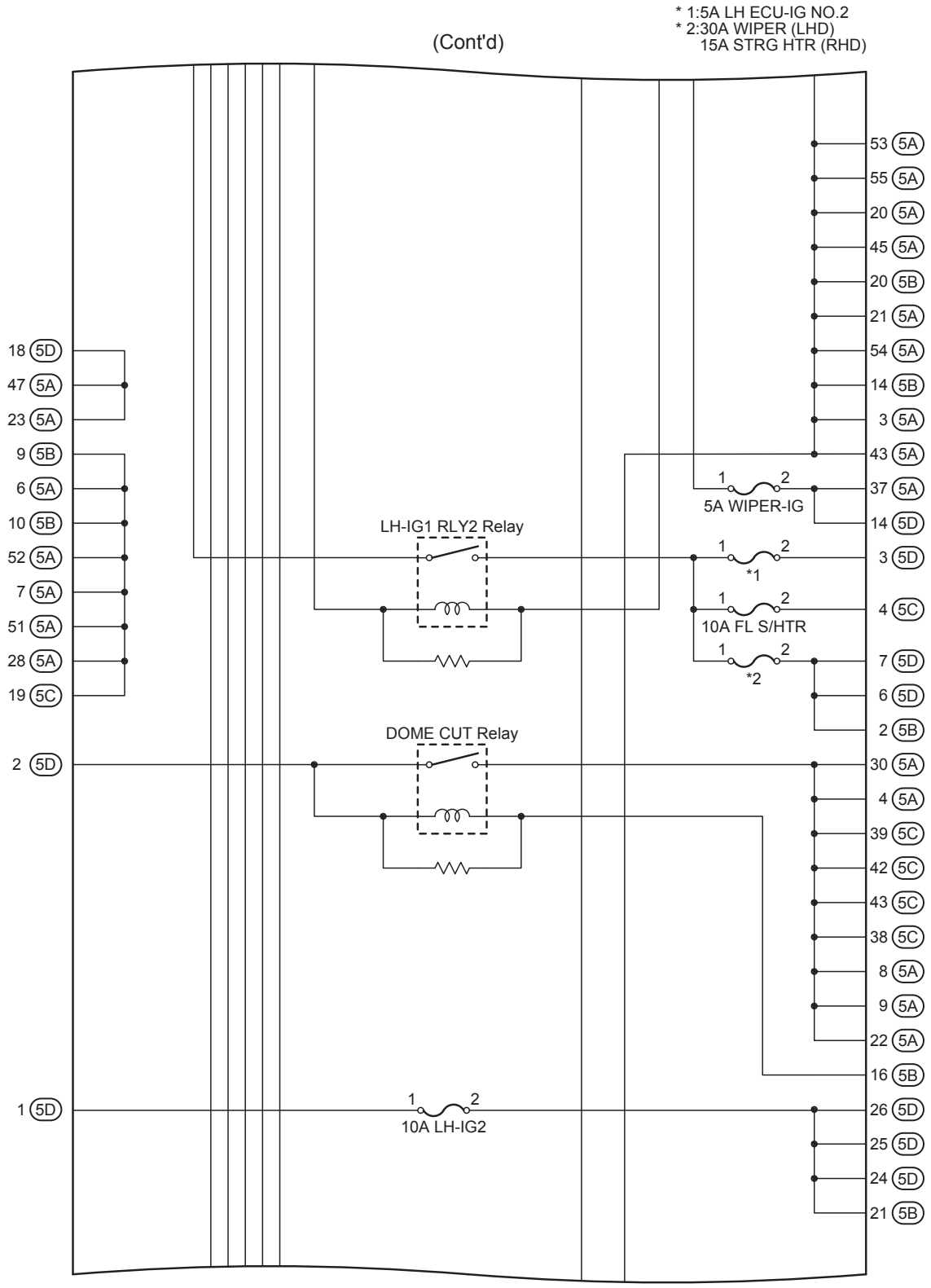

(Cont. Next Page)

(Cont'd)

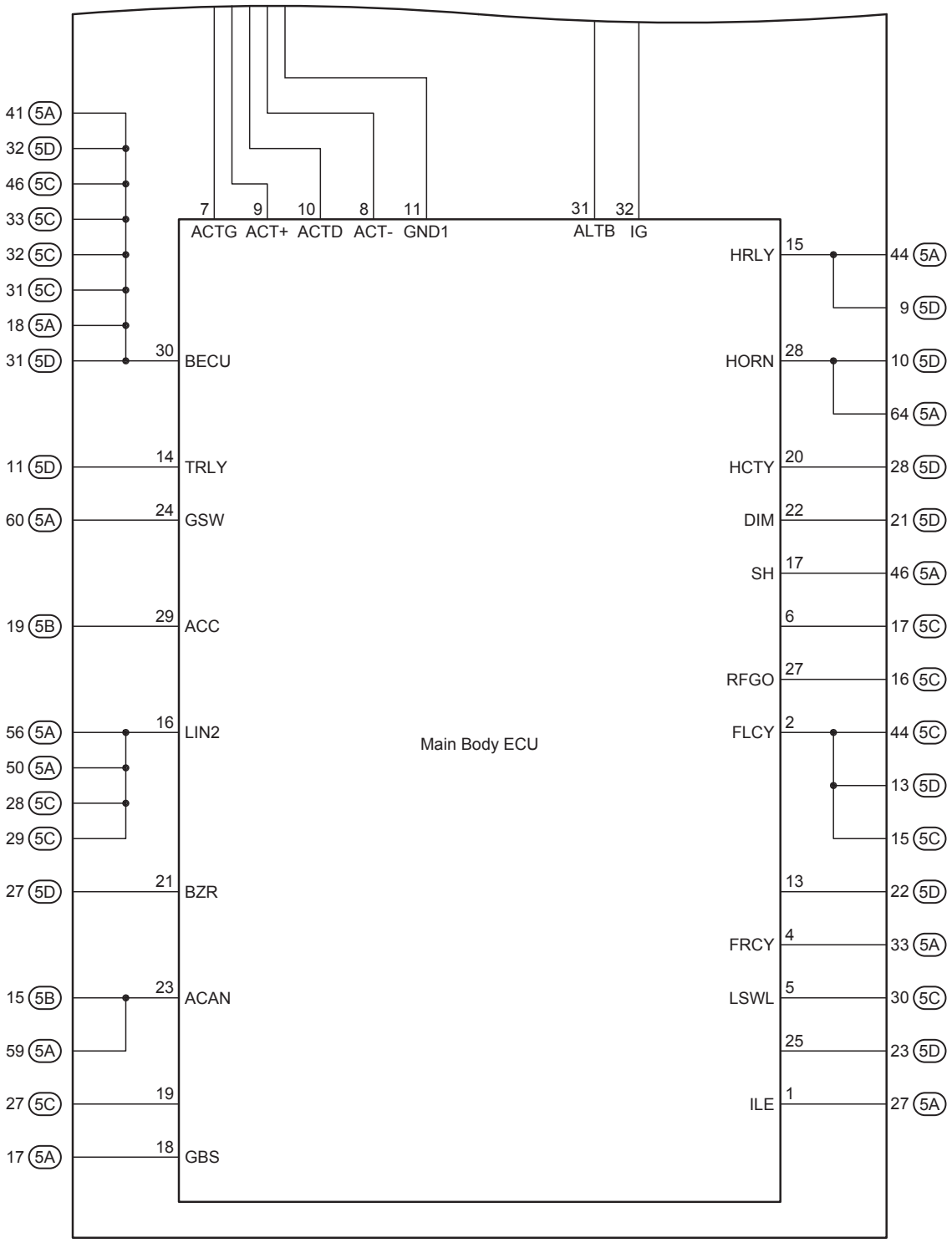
Main Body ECU
7 ACTG
9 ACT+
10 ACTD
8 ACT-
11 GND1
31 ALTB
32 IG
41 5A
32 5D
46 5C
33 5C
32 5C
31 5C
18 5A
31 5D
30 BECU
11 5D
14 TRLY
60 5A
24 GSW
19 5B
29 ACC
56 5A
50 5A
28 5C
29 5C
16 LIN2
27 5D
21 BZR
15 5B
59 5A
23 ACAN
27 5C
19
17 5A
18 GBS
HRLY 15
44 5A
9 5D
HORN 28
10 5D
64 5A
HCTY 20
28 5D
DIM 22
21 5D
SH 17
46 5A
6
17 5C
RFGO 27
16 5C
FLCY 2
44 5C
13 5D
15 5C
13
22 5D
FRCY 4
33 5A
LSWL 5
30 5C
25
23 5D
ILE 1
27 5A