(Cont. next page)

Vehicle Dynamics Integrated Management (for Hybrid Vehicle)

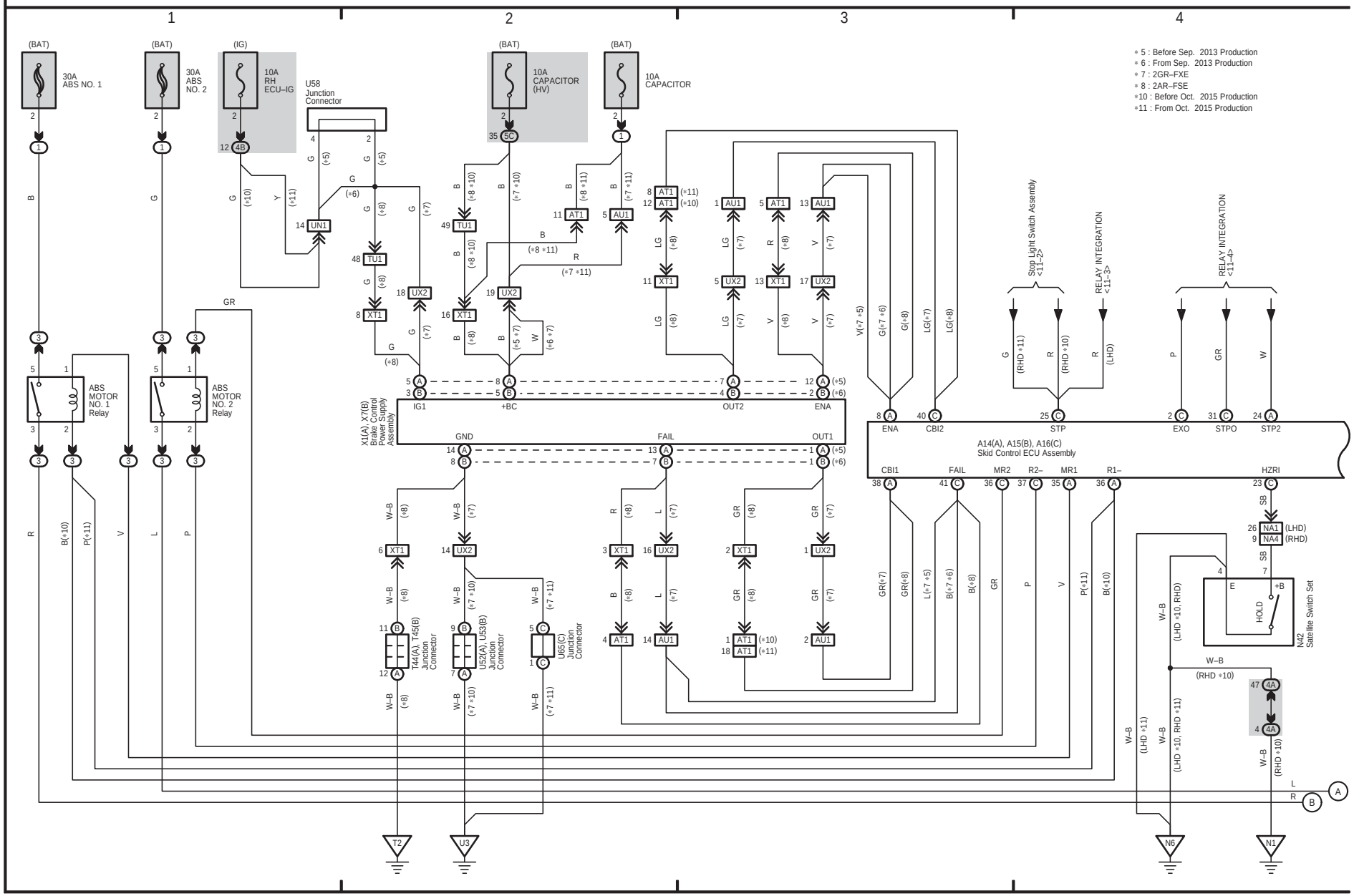

(Cont. next page)

Vehicle Dynamics Integrated Management (for Hybrid Vehicle)

∗9 : w/ Skid Control Buzzer Assembly
∗10 : Before Oct. 2015 Production
∗11 : From Oct. 2015 Production

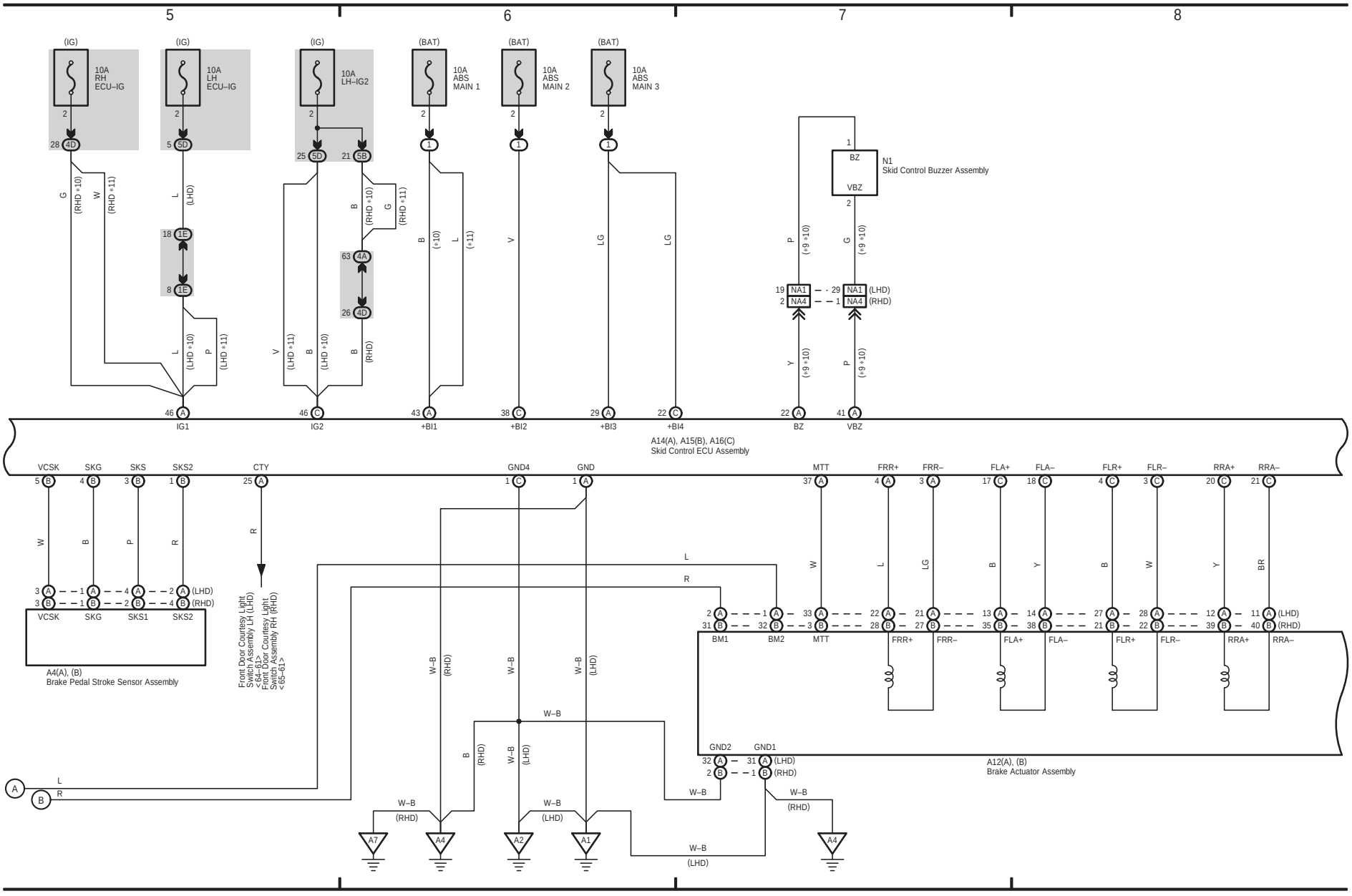

14 GS 450h / GS 300h (Cont' d)

(Cont. next page)

Vehicle Dynamics Integrated Management (for Hybrid Vehicle)

∗ 5 : Before Sep. 2013 Production
∗ 6 : From Sep. 2013 Production
∗10 : Before Oct. 2015 Production
∗11 : From Oct. 2015 Production

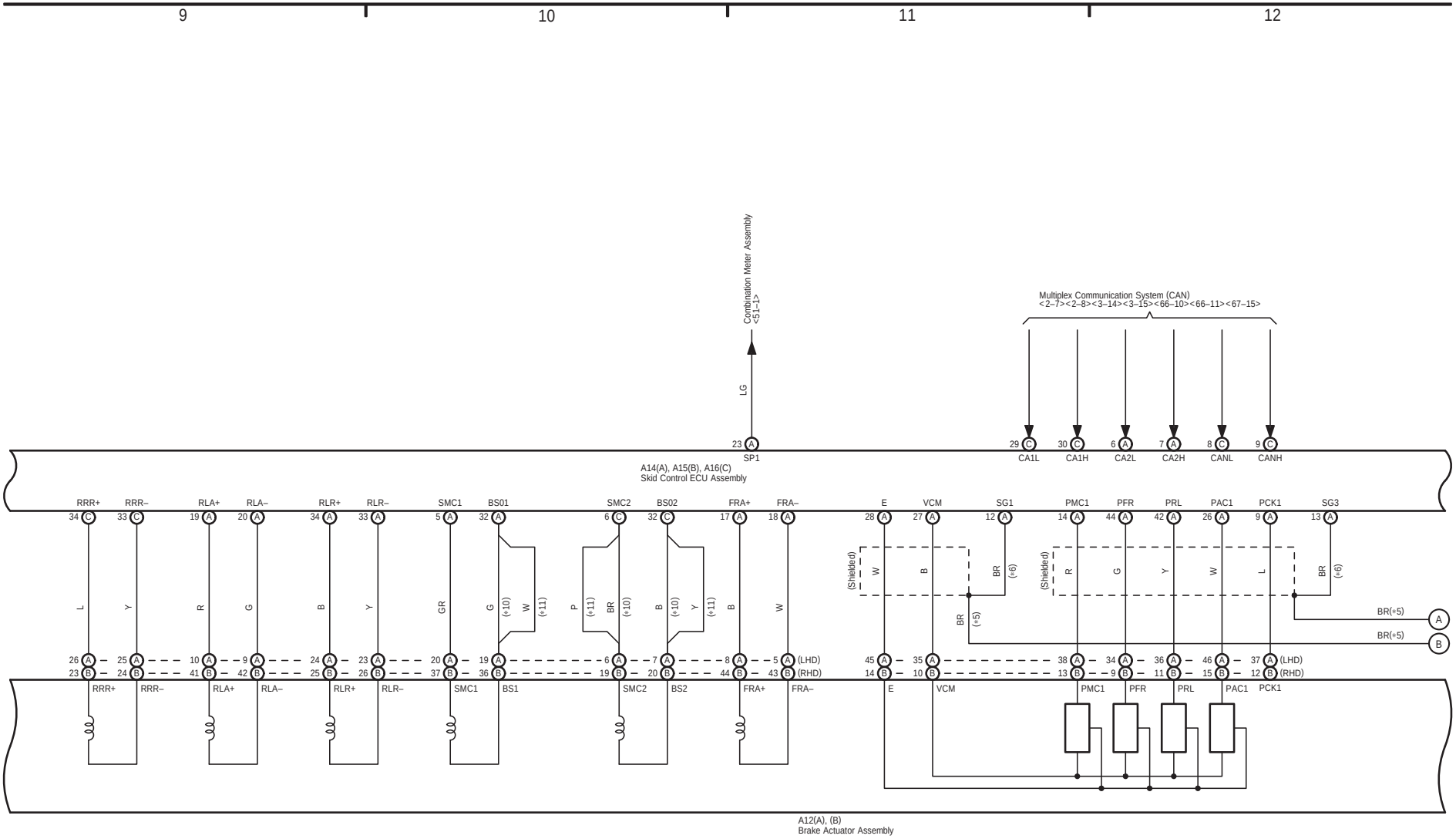

(Cont. next page)

Vehicle Dynamics Integrated Management (for Hybrid Vehicle)

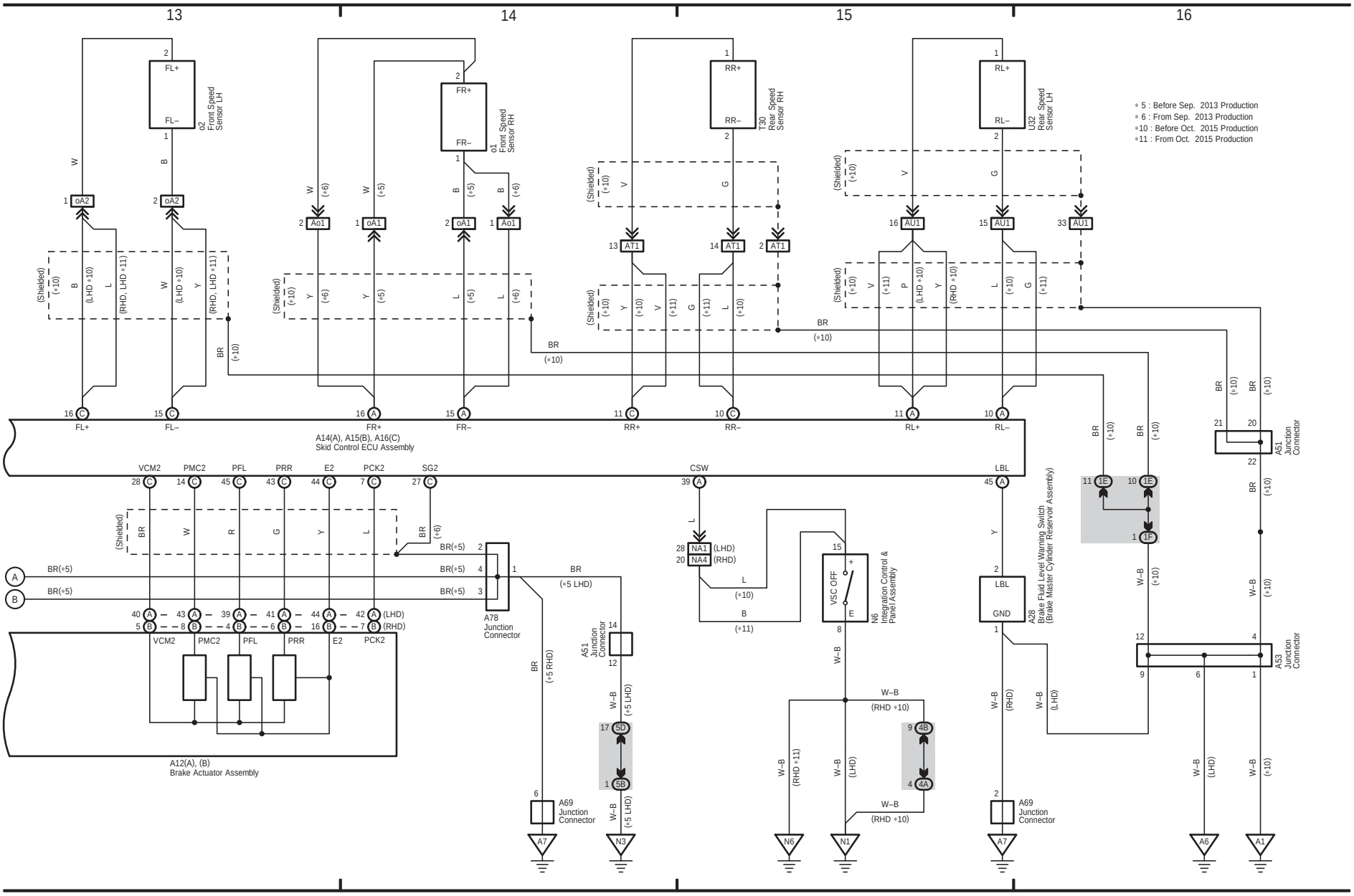
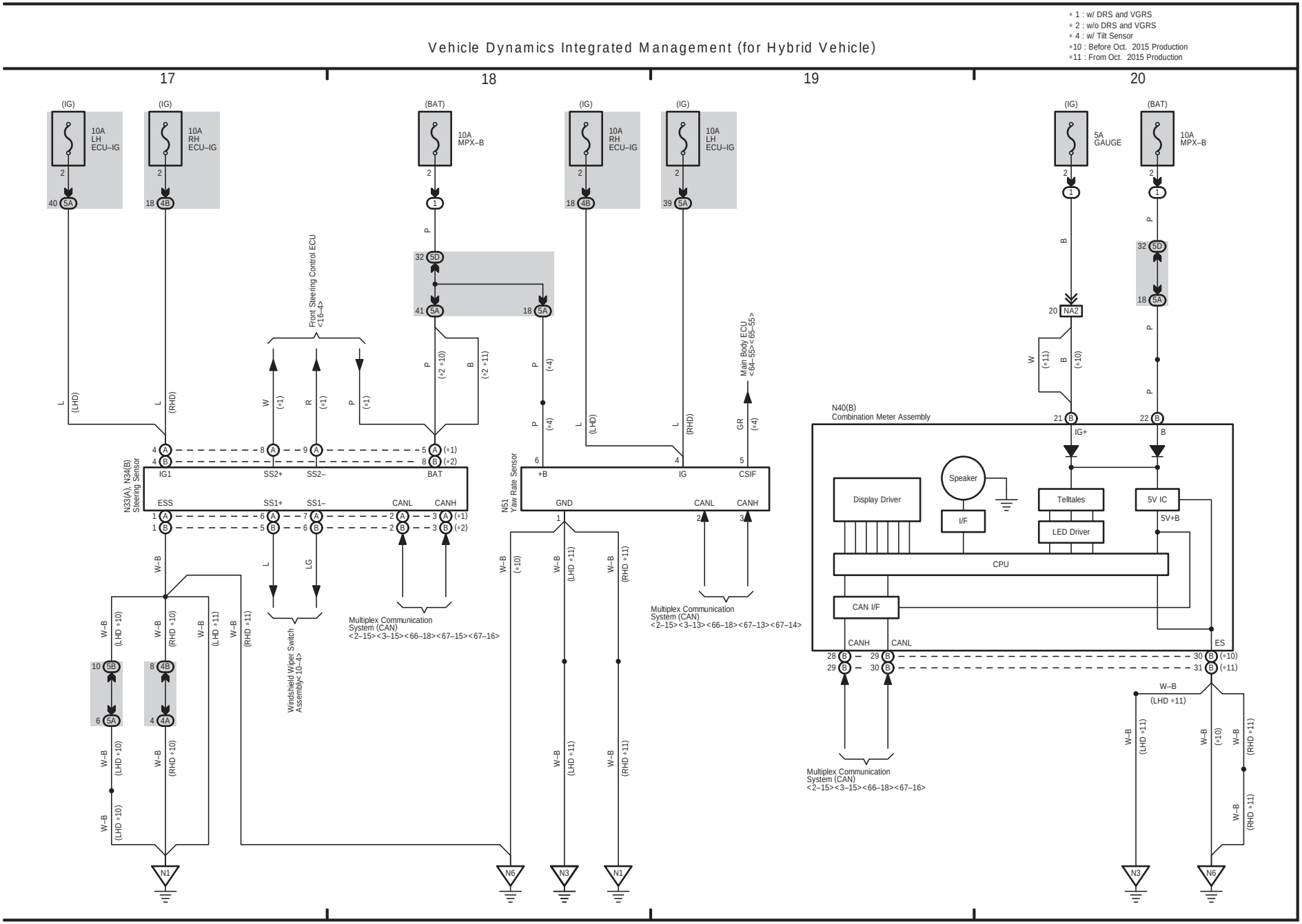
14 GS 450h / GS 300h (Cont' d)