15 GS 450h / GS 300h

(Cont. next page)

LEXUS Night View System

* 1 : Except LED Headlight Type

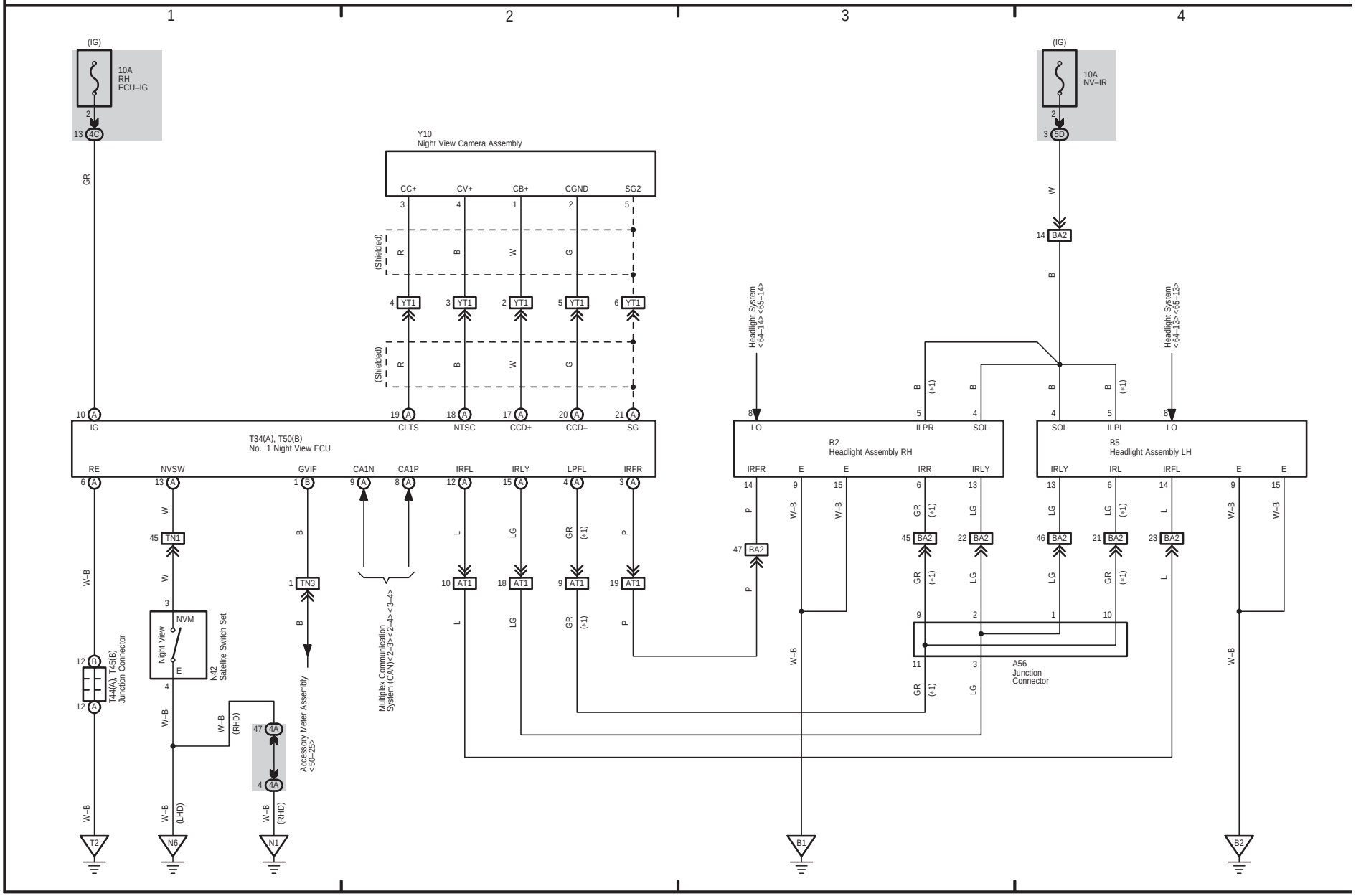
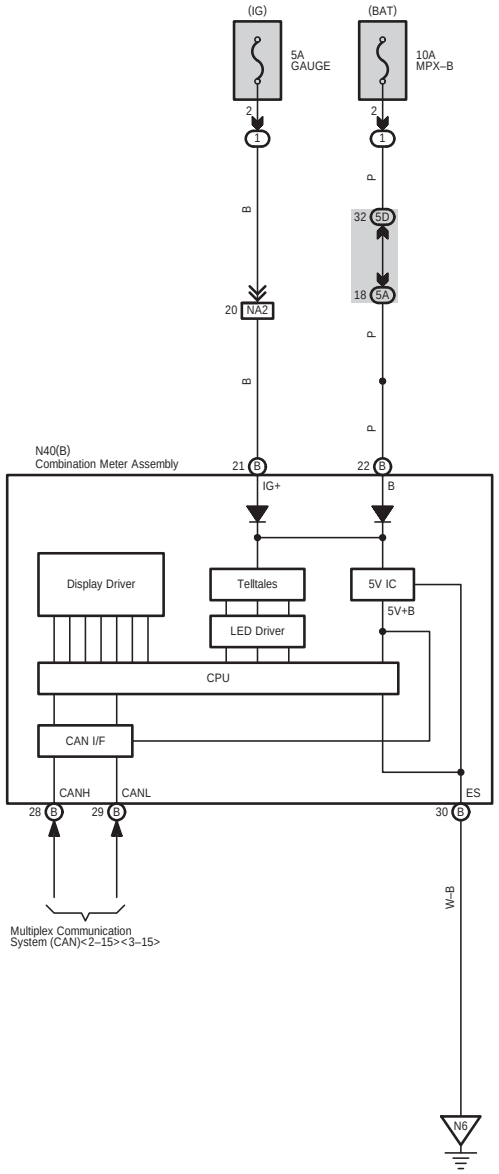
LEXUS Night View System