22 GS 450h / GS 300h

(Cont. next page)

Tire Pressure Warning System (Before Sep. 2013 Production)

* 1 : w/ Auto Location
* 2 : FMVSS138 Type
* 3 : ECE–R64 Type

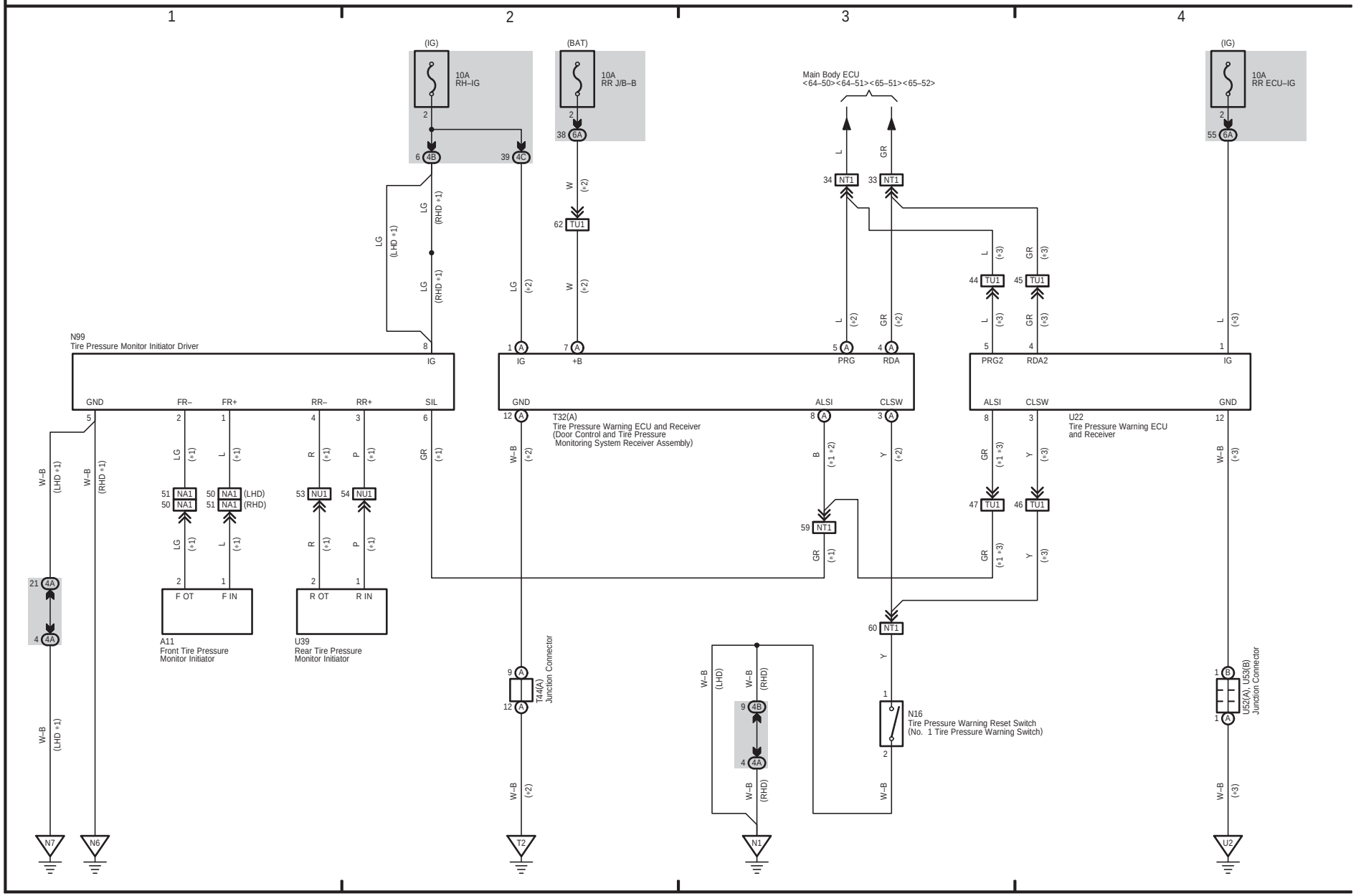
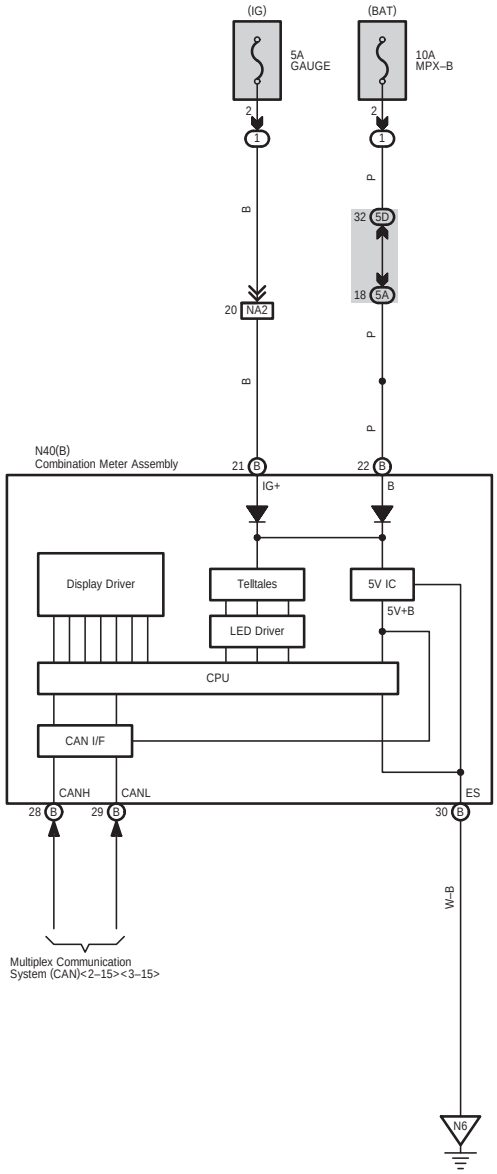
Tire Pressure Warning System (Before Sep. 2013 Production)