(Cont. next page)

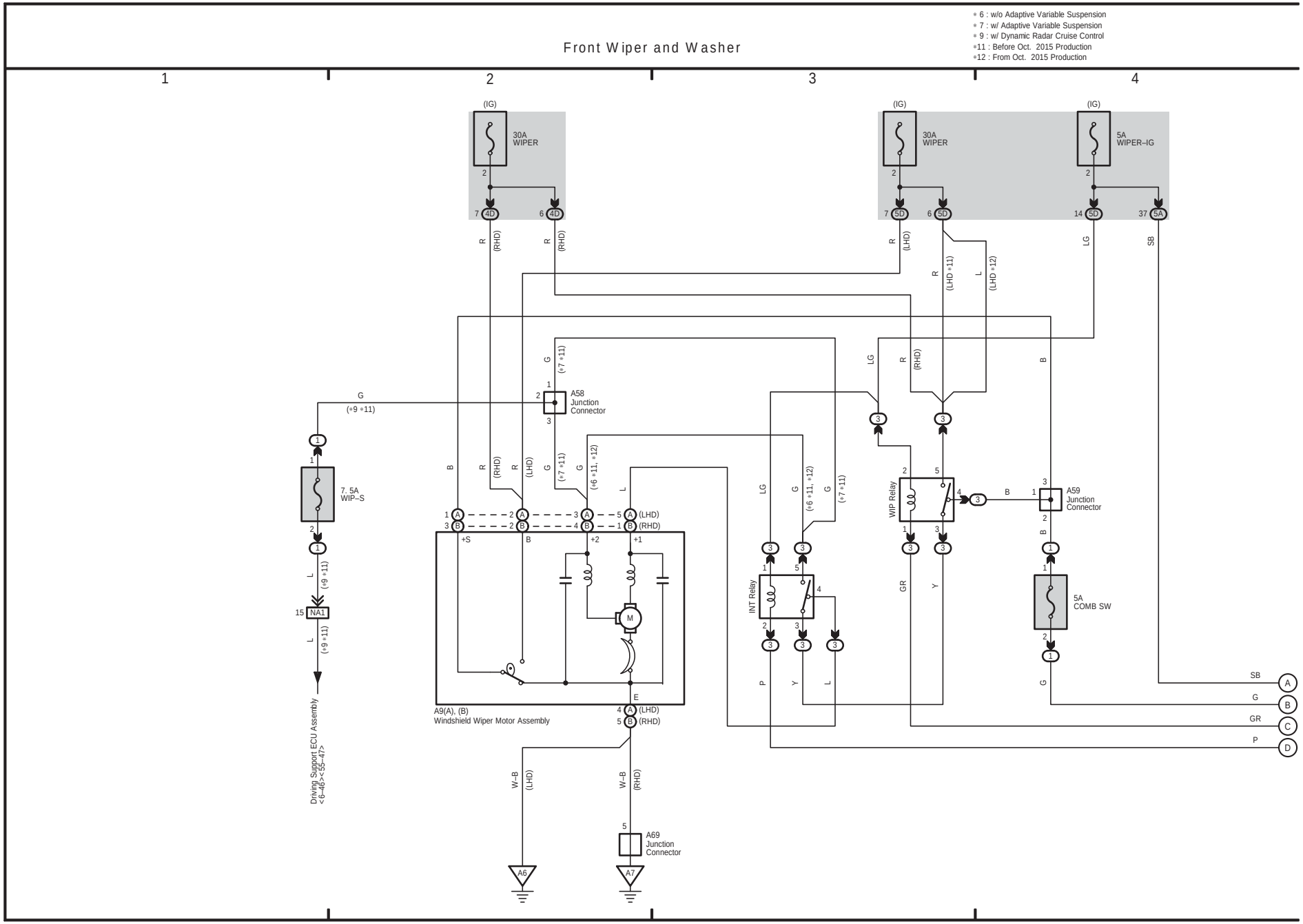

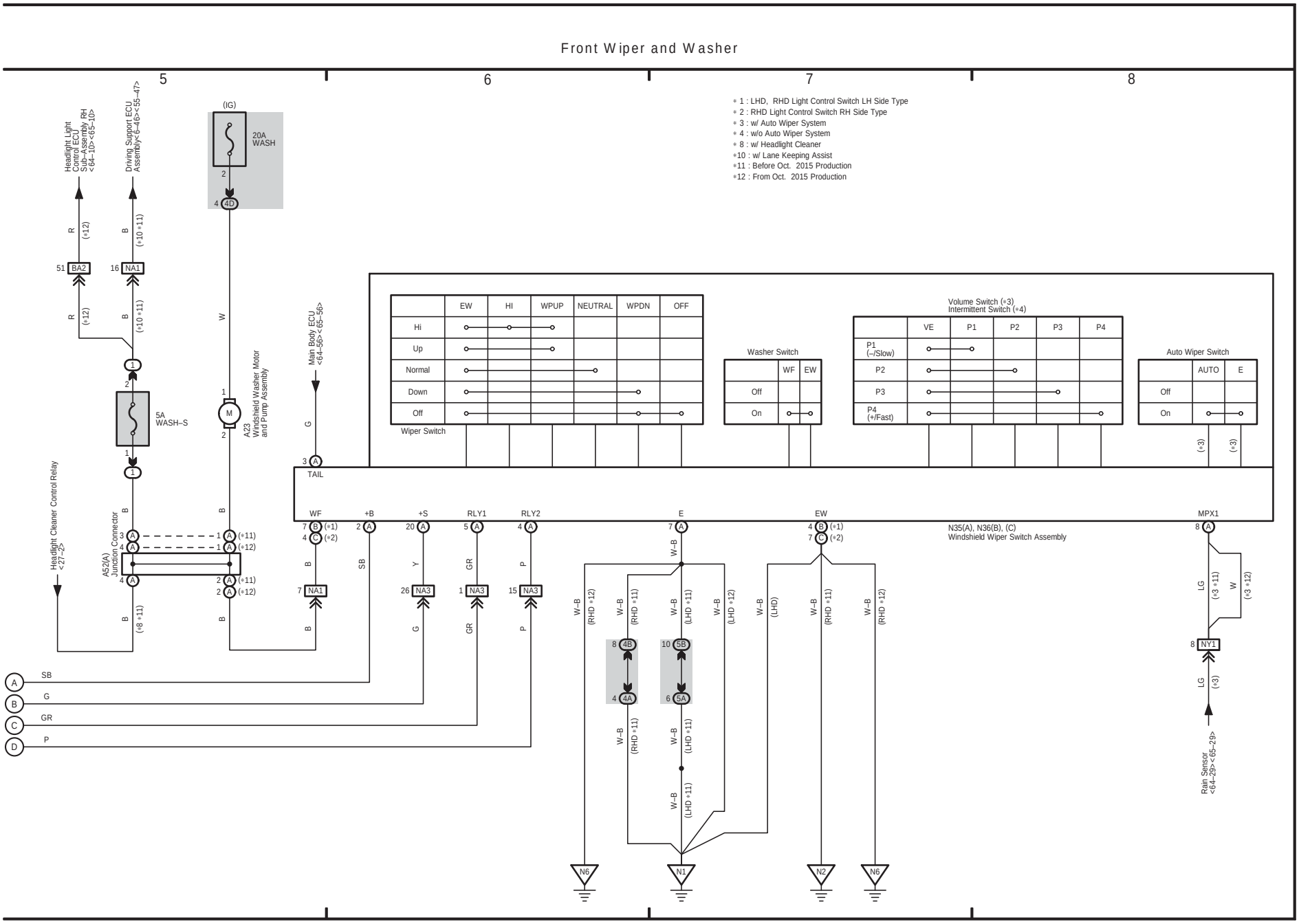
Front Wiper and Washer
5
6
7
8
∗1 : LHD, RHD Light Control Switch LH Side Type
∗2 : RHD Light Control Switch RH Side Type
∗3 : w/ Auto Wiper System
∗4 : w/o Auto Wiper System
∗8 : w/ Headlight Cleaner
∗10 : w/ Lane Keeping Assist
∗11 : Before Oct. 2015 Production
∗12 : From Oct. 2015 Production
Headlight Light Control ECU Sub-Assembly RH <64-10><65-10>
Driving Support ECU Assembly<6-46><55-47>
(IG)
20A WASH
5A WASH-S
A23 Windshield Washer Motor and Pump Assembly
Main Body ECU <64-56><65-56>
Headlight Cleaner Control Relay <27-2>
A52(A) Junction Connector
Wiper Switch
Washer Switch
Volume Switch (∗3)
Intermittent Switch (∗4)
Auto Wiper Switch
N35(A), N36(B), (C)
Windshield Wiper Switch Assembly
Rain Sensor <64-29><65-29>
TAIL
WF
+B
+S
RLY1
RLY2
E
EW
MPX1
SB
G
GR
P
N6
N1
N2