(Cont. next page)

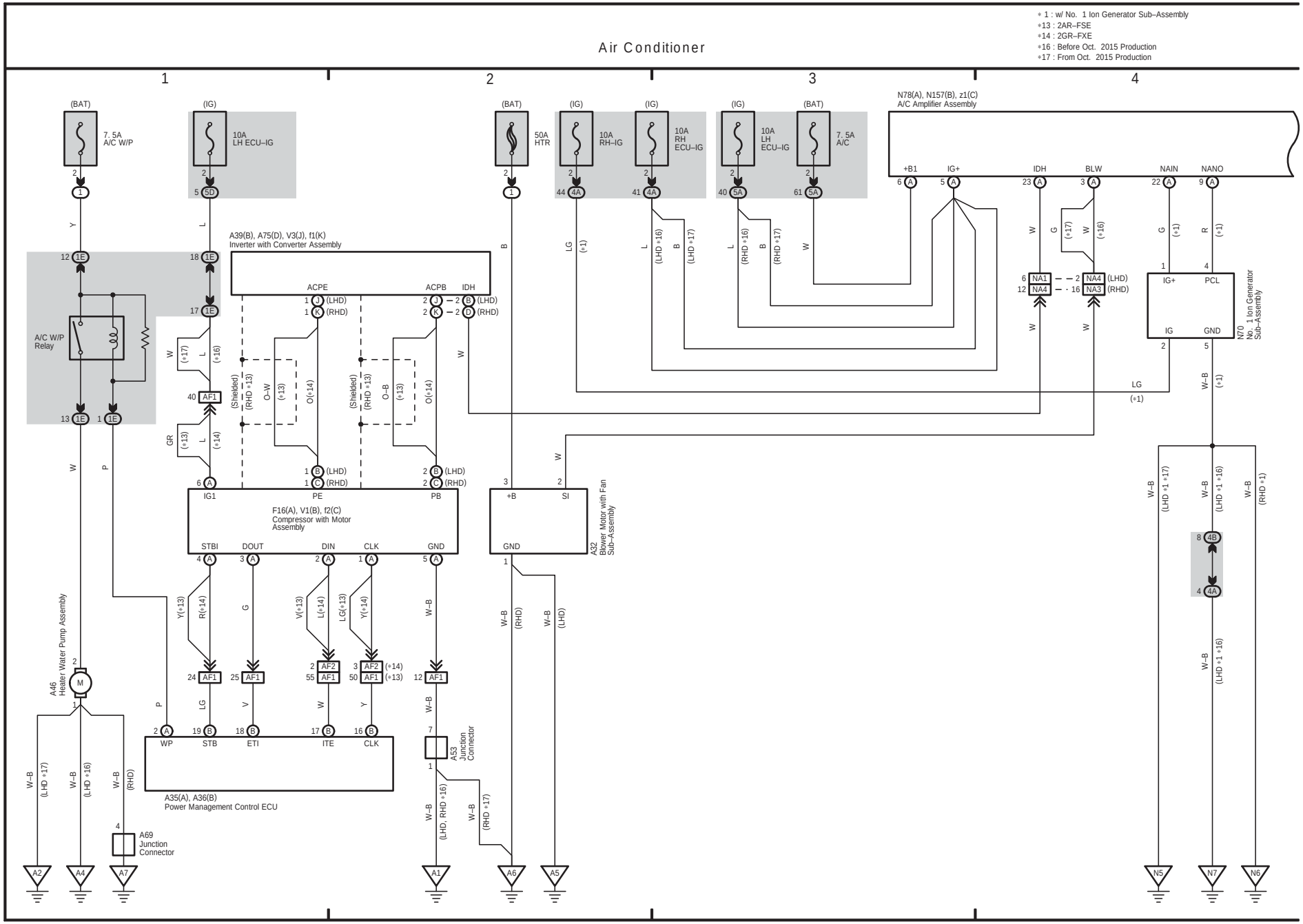

(Cont. next page)

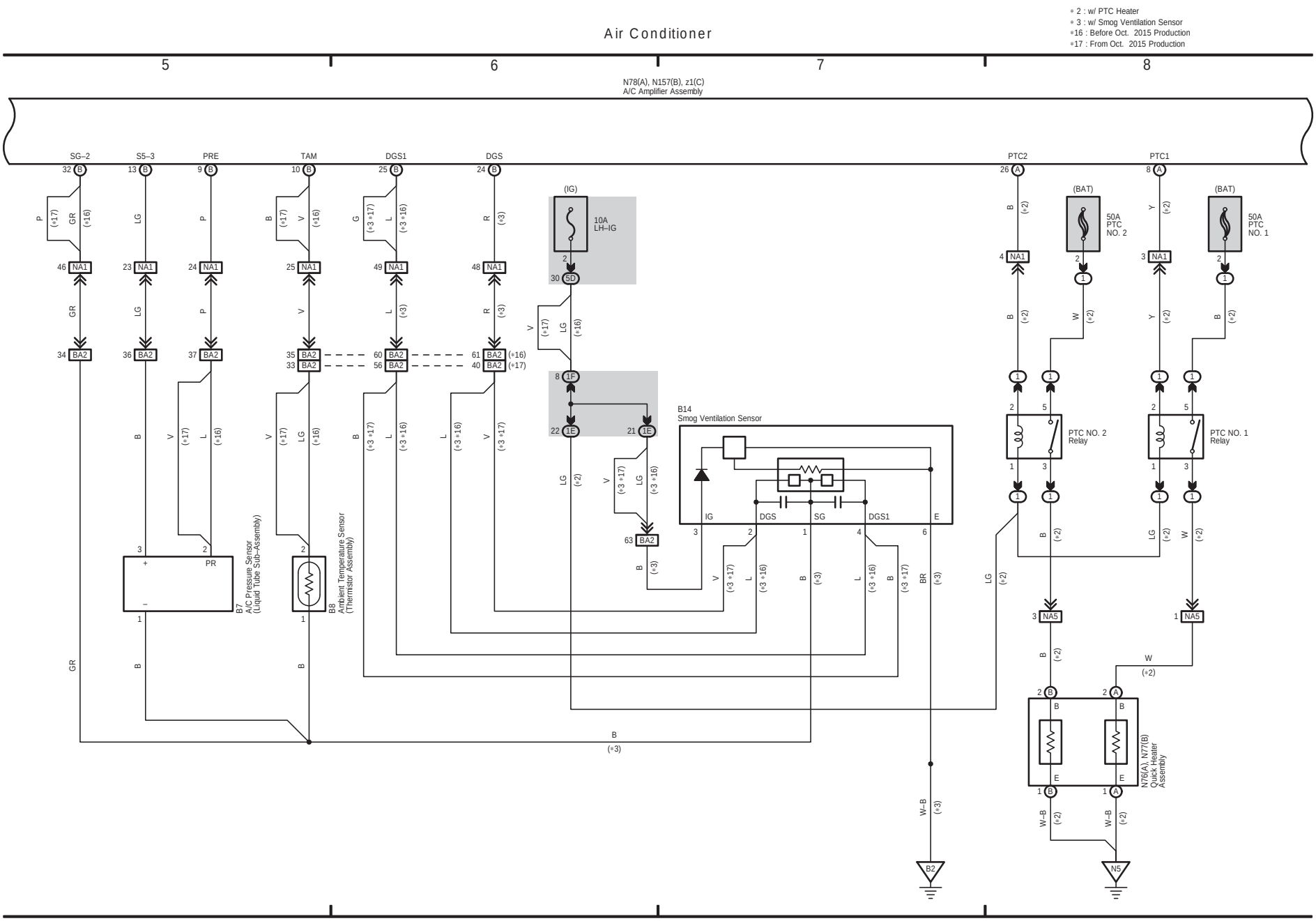

53 GS 450h / GS 300h (Cont' d)

(Cont. next page)

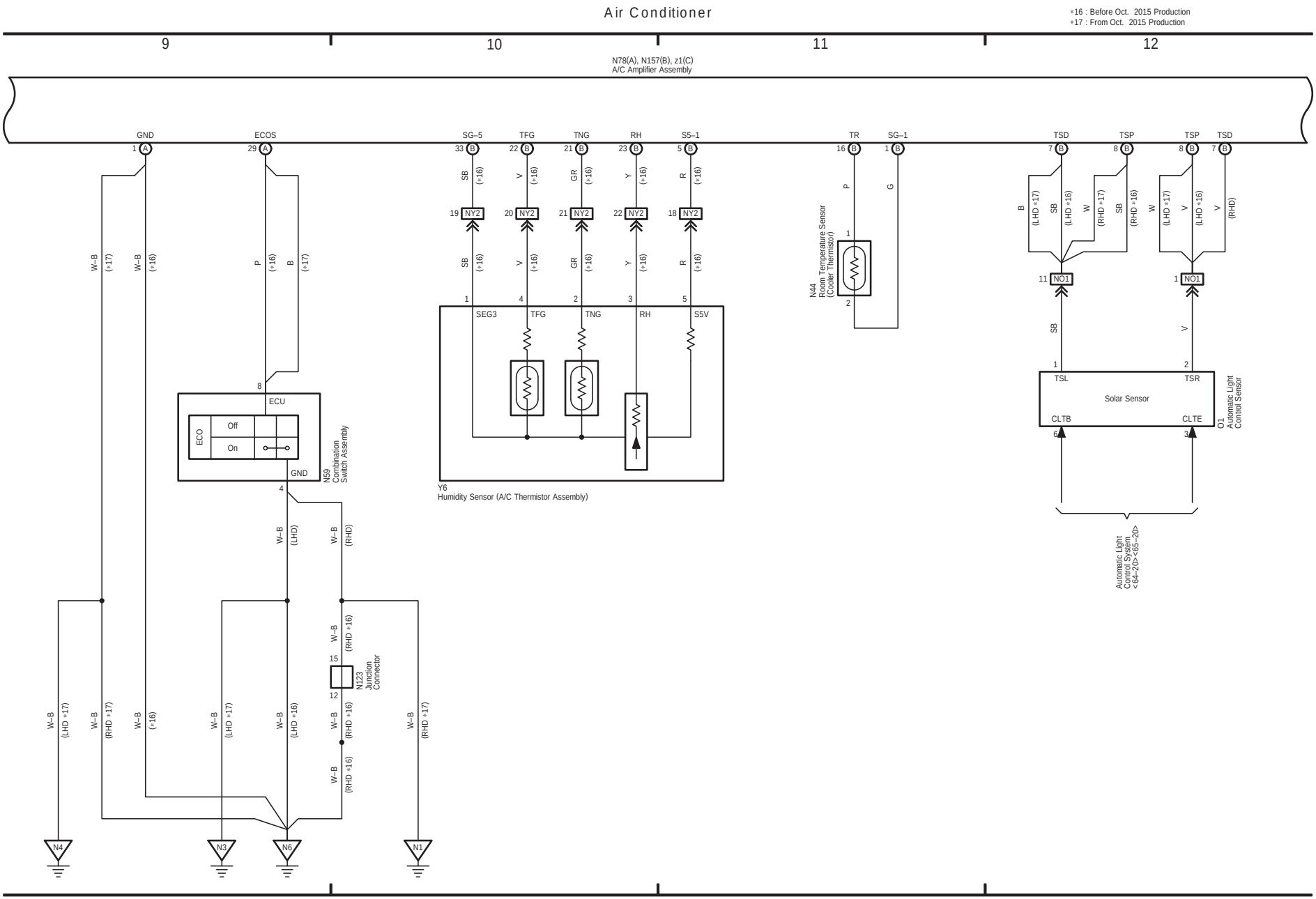

(Cont. next page)

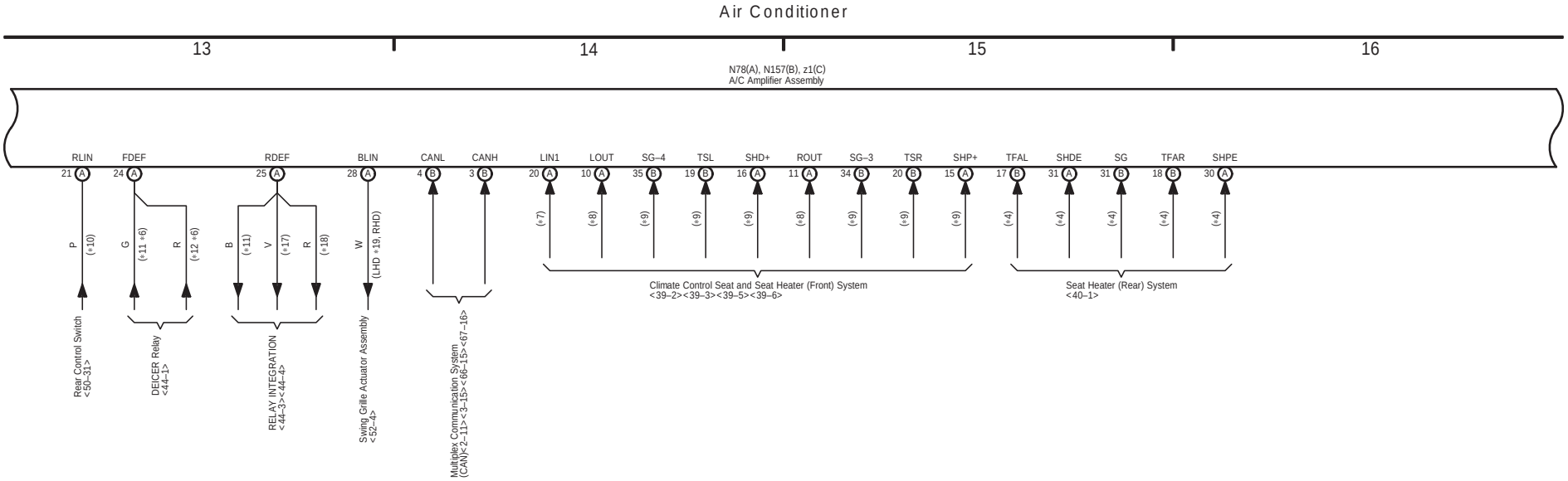

∗ 4 : w/ Seat Heater (Rear)
∗ 6 : w/ Front Window Deicer
∗ 7 : w/ Climate Control Seat, w/ Seat Heater (Front)
∗ 8 : w/ Climate Control Seat
∗ 9 : w/ Seat Heater (Front)
∗10 : w/ Rear Control Switch
∗11 : Before Sep. 2013 Production
∗12 : From Sep. 2013 Production
∗17 : From Oct. 2015 Production
∗18 : From Oct. 2013 Production
until Oct. 2015 Production
∗19 : Before Sep. 2018 Production

53 GS 450h / GS 300h (Cont' d)

(Cont. next page)

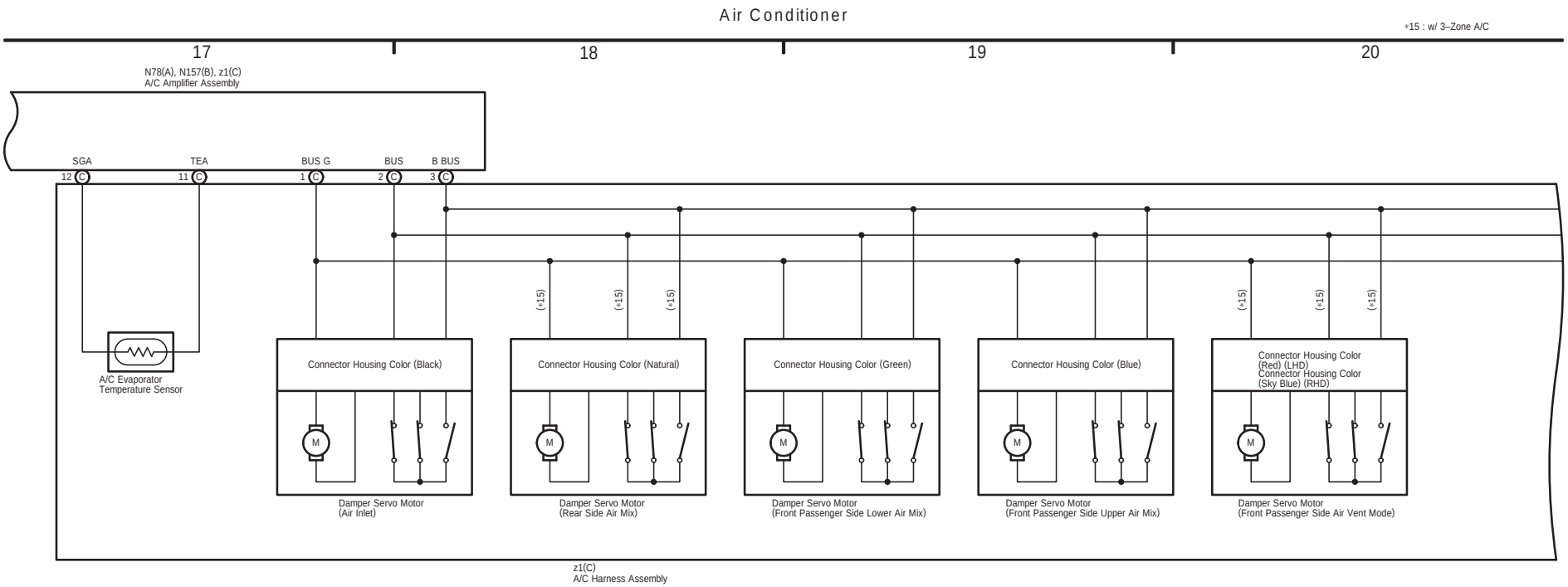

(Cont. next page)

Air Conditioner

21 22 23 24

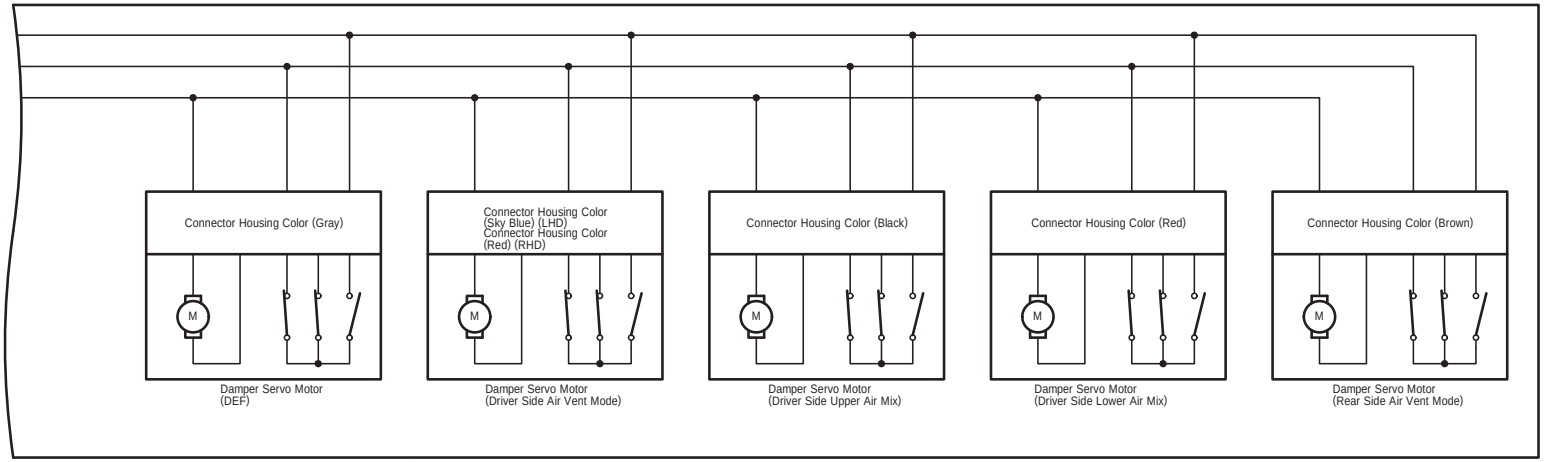

53 GS 450h / GS 300h (Cont' d)

Air Conditioner
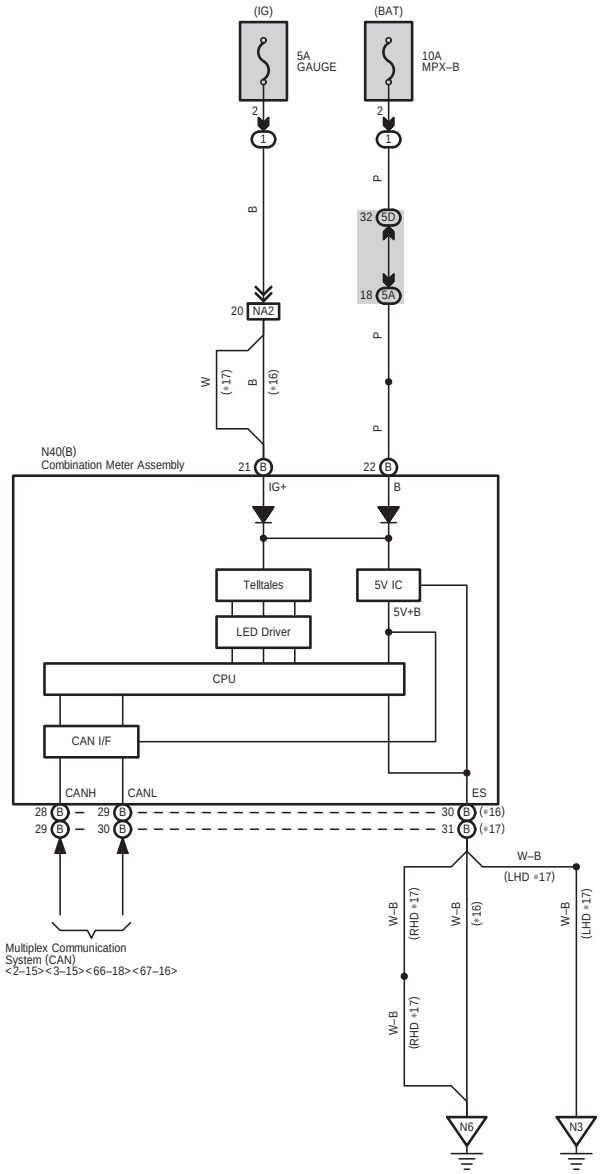
*16 : Before Oct. 2015 Production
*17 : From Oct. 2015 Production