(Cont. next page)

EPS (2AR–FSE)

* 1 : Before Oct. 2015 Production
* 2 : From Oct. 2015 Production

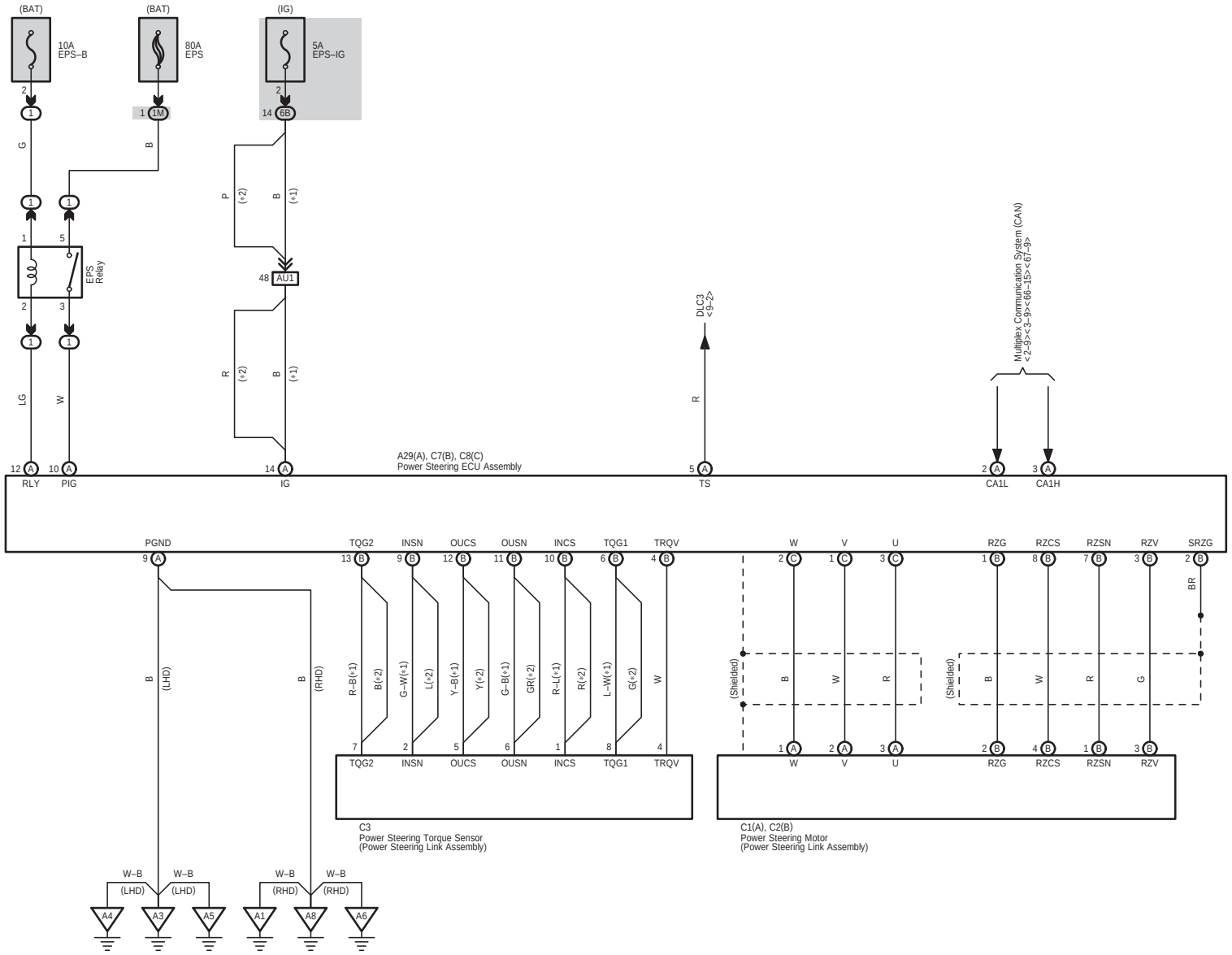

EPS (2AR–FSE)

* 1 : Before Oct. 2015 Production
* 2 : From Oct. 2015 Production
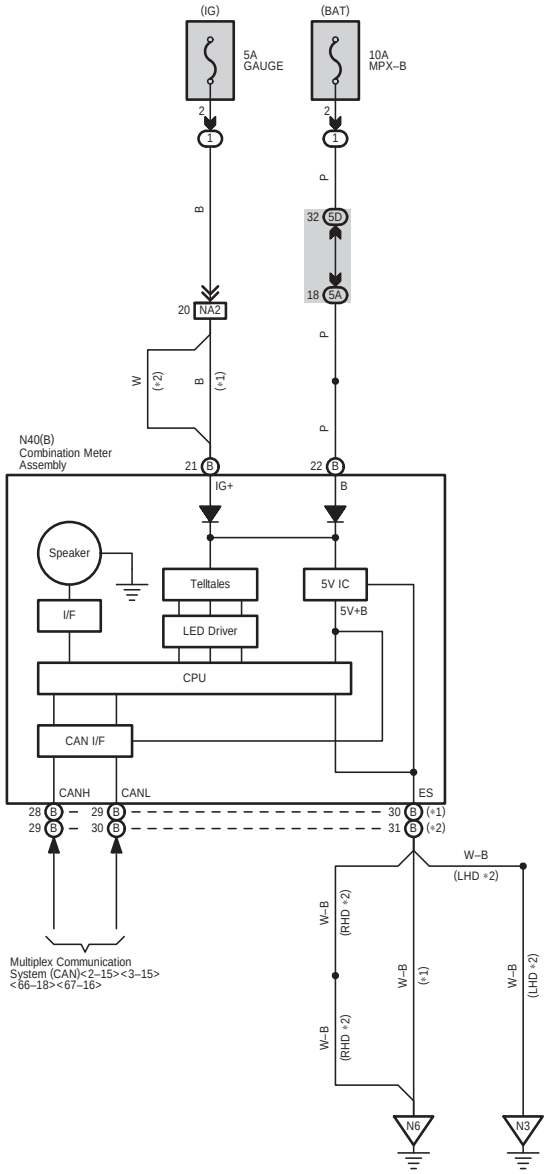
5 6 7 8