61 GS 450h / GS 300h

(Cont. next page)

Tire Pressure Warning System (From Sep. 2013 Production)

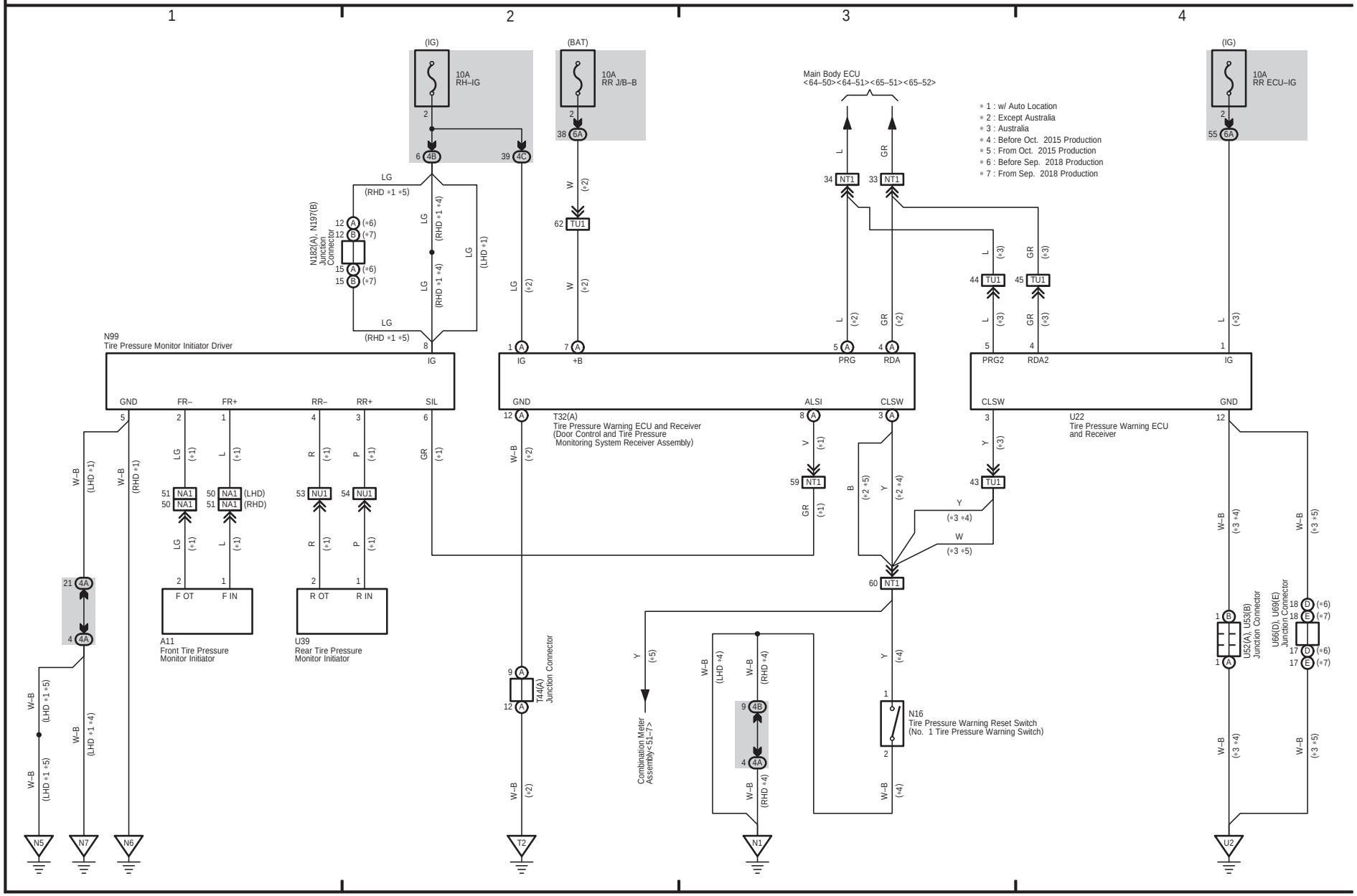

Tire Pressure Warning System (From Sep. 2013 Production)

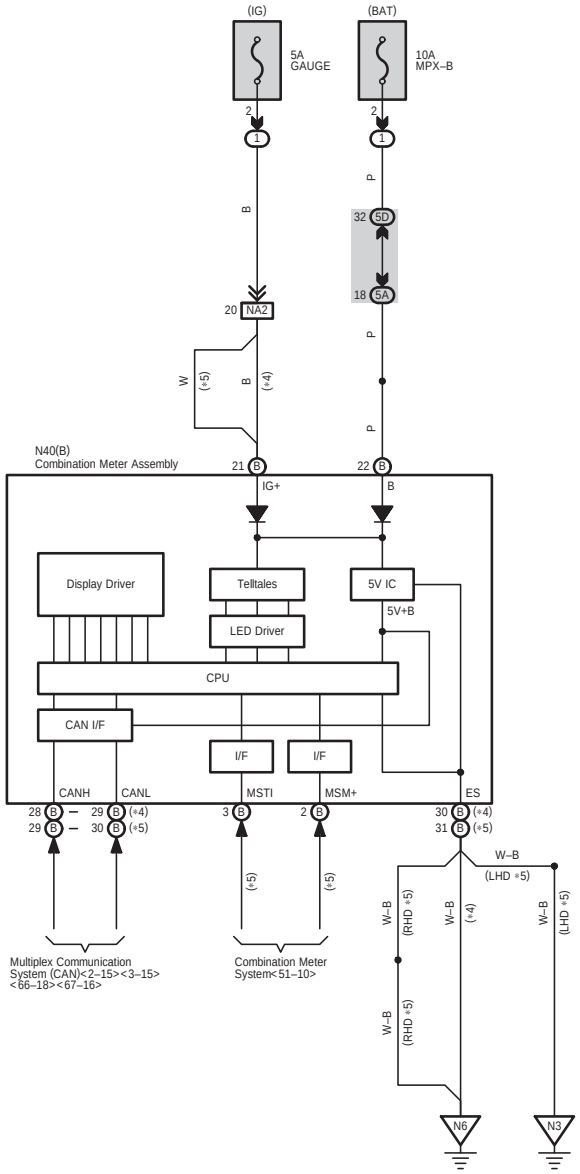

* 4 : Before Oct. 2015 Production
* 5 : From Oct. 2015 Production