[Cowl Side J/B RH Inner Circuit]

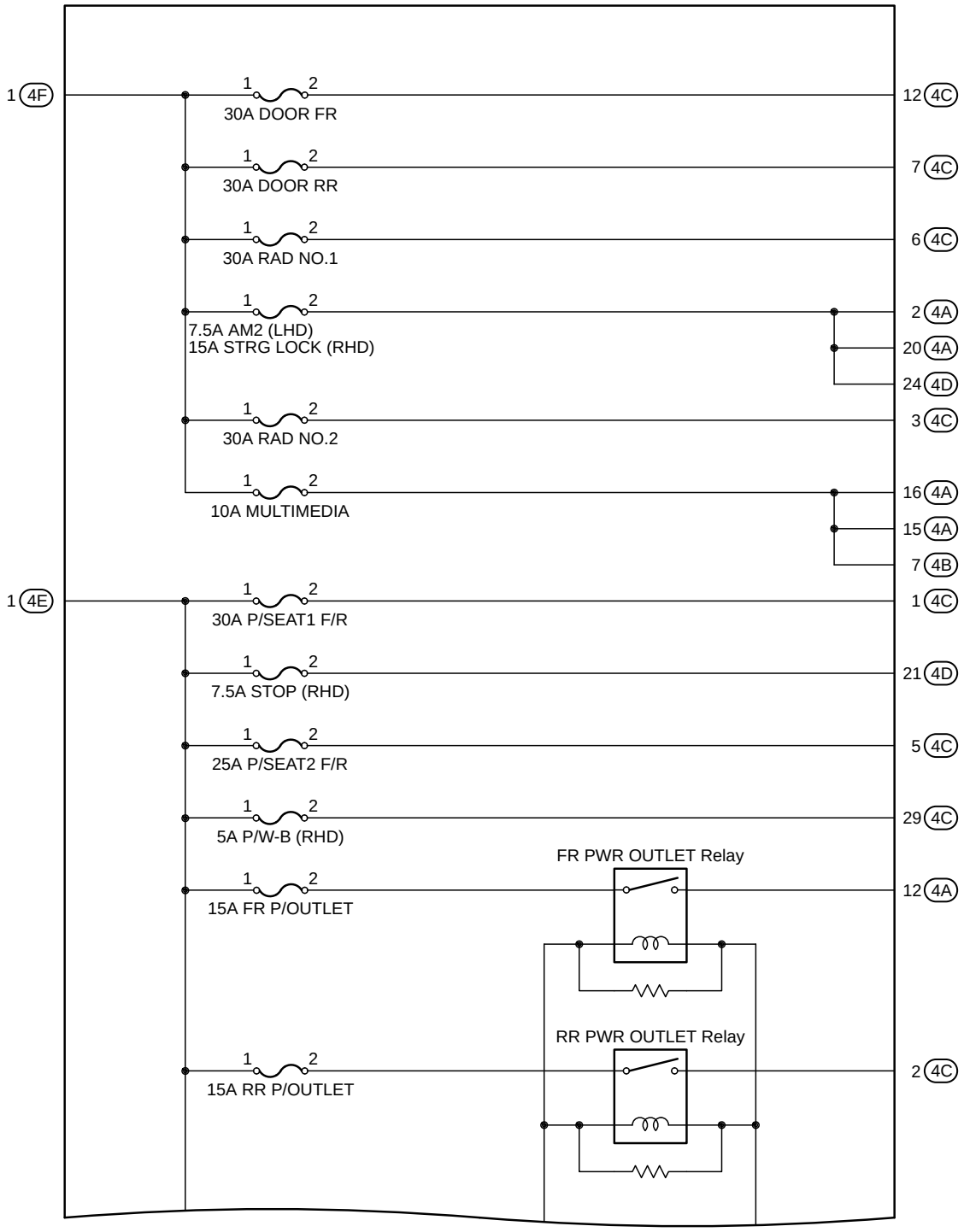

(Cont. Next Page)

[Cowl Side J/B RH Inner Circuit]

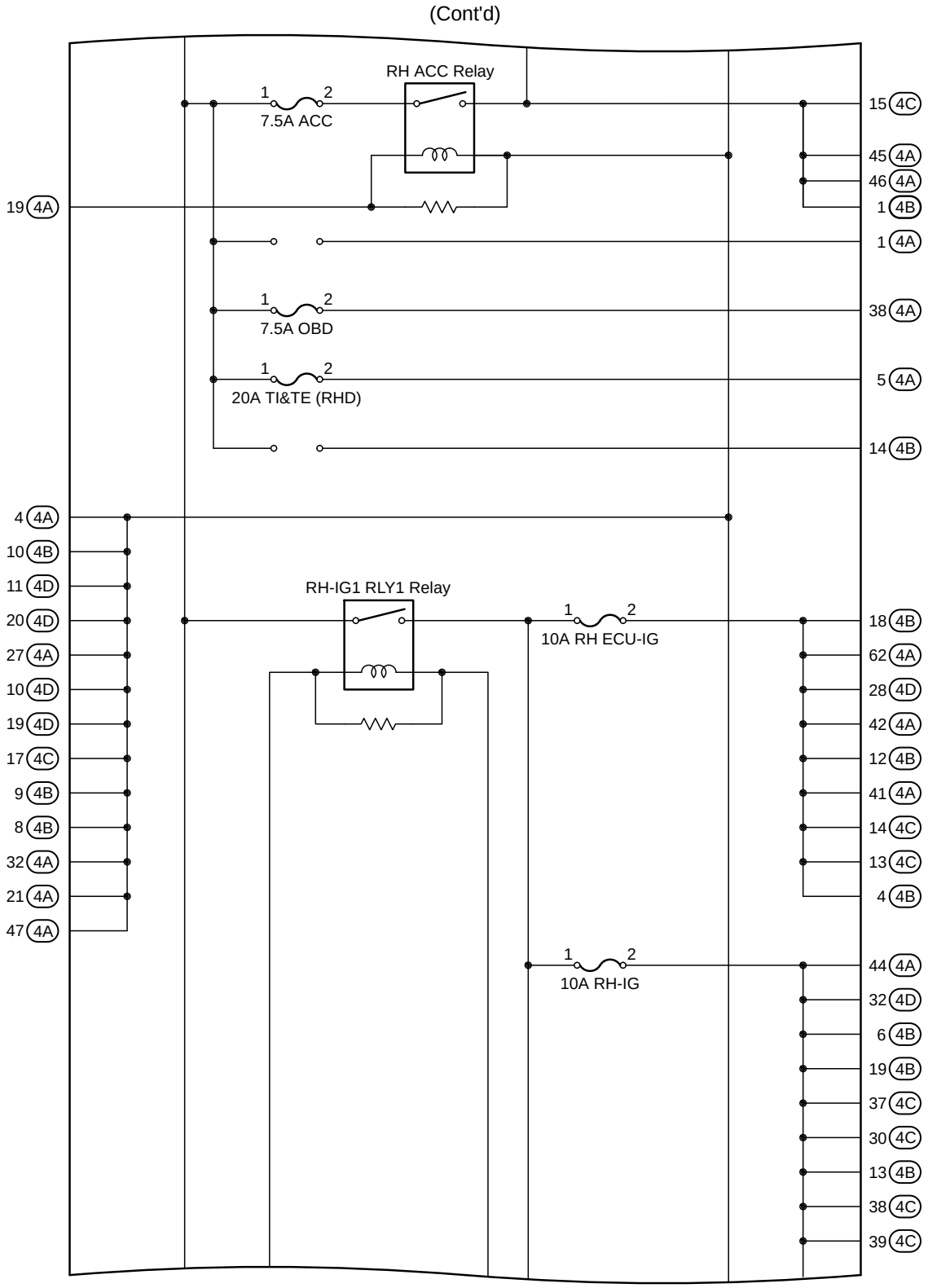

(Cont. Next Page)

[Cowl Side J/B RH Inner Circuit]

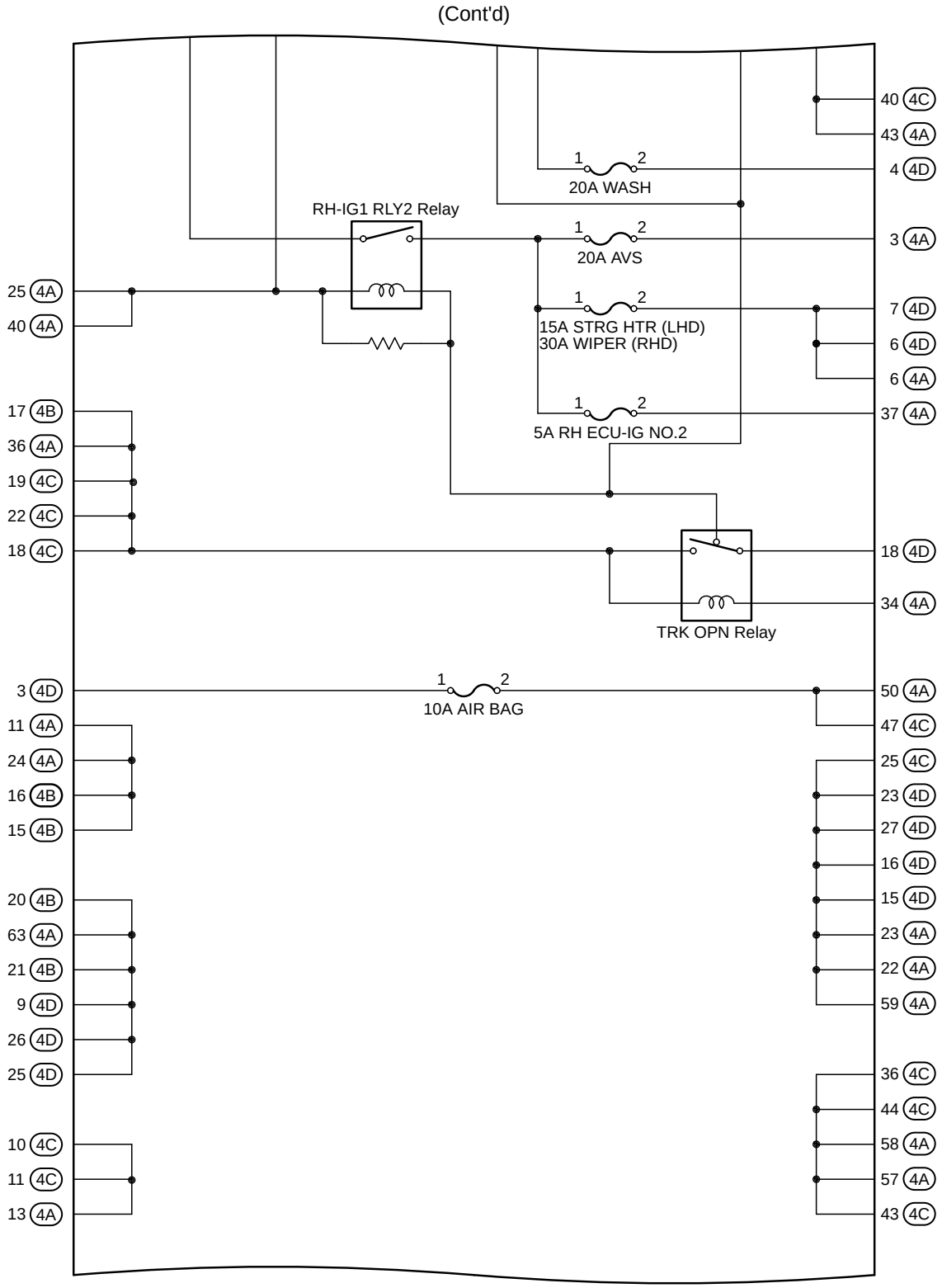

(Cont. Next Page)

[Cowl Side J/B RH Inner Circuit]
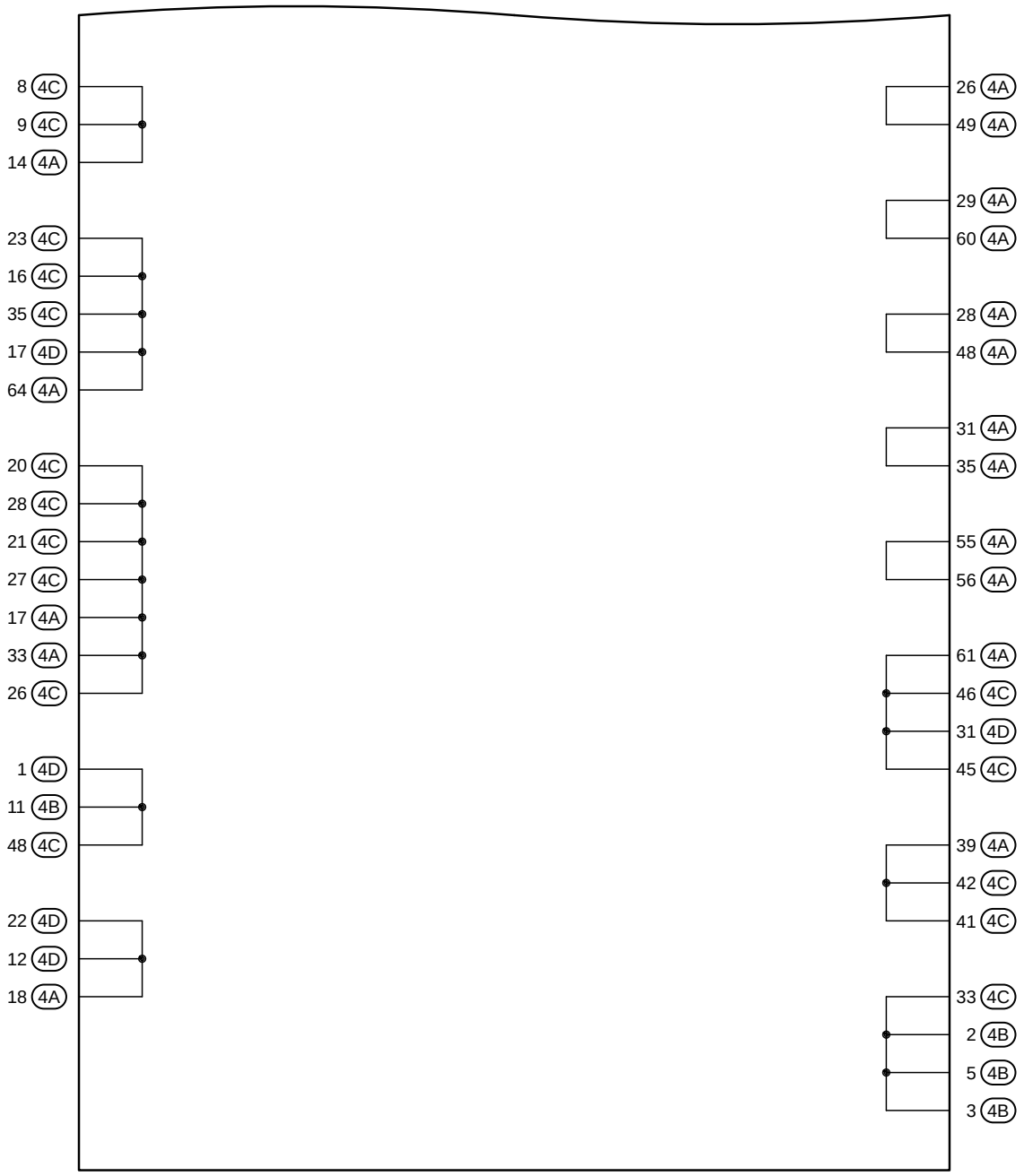
(Cont'd)