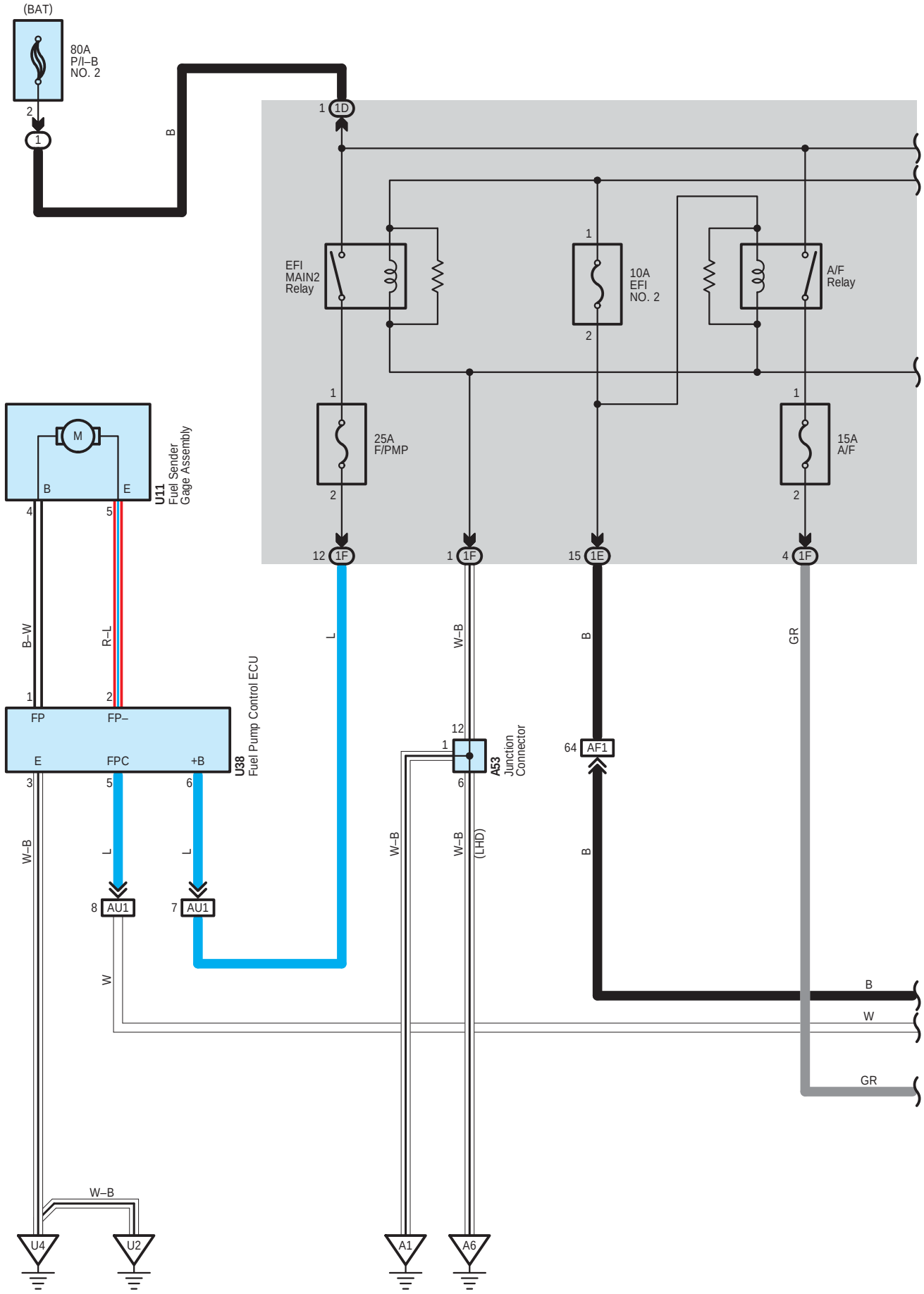
(BAT)
80A
P/I–B
NO. 2
EFI
MAIN2
Relay
10A
EFI
NO. 2
A/F
Relay
25A
F/PMP
15A
A/F
U11
Fuel Sender
Gage Assembly
U38
Fuel Pump Control ECU
A53
Junction
Connector
(LHD)
FP
FP–
E
FPC
+B
AU1
AF1
U4
U2
A1
A6
B–W
R–L
W–B
L
B
GR
W

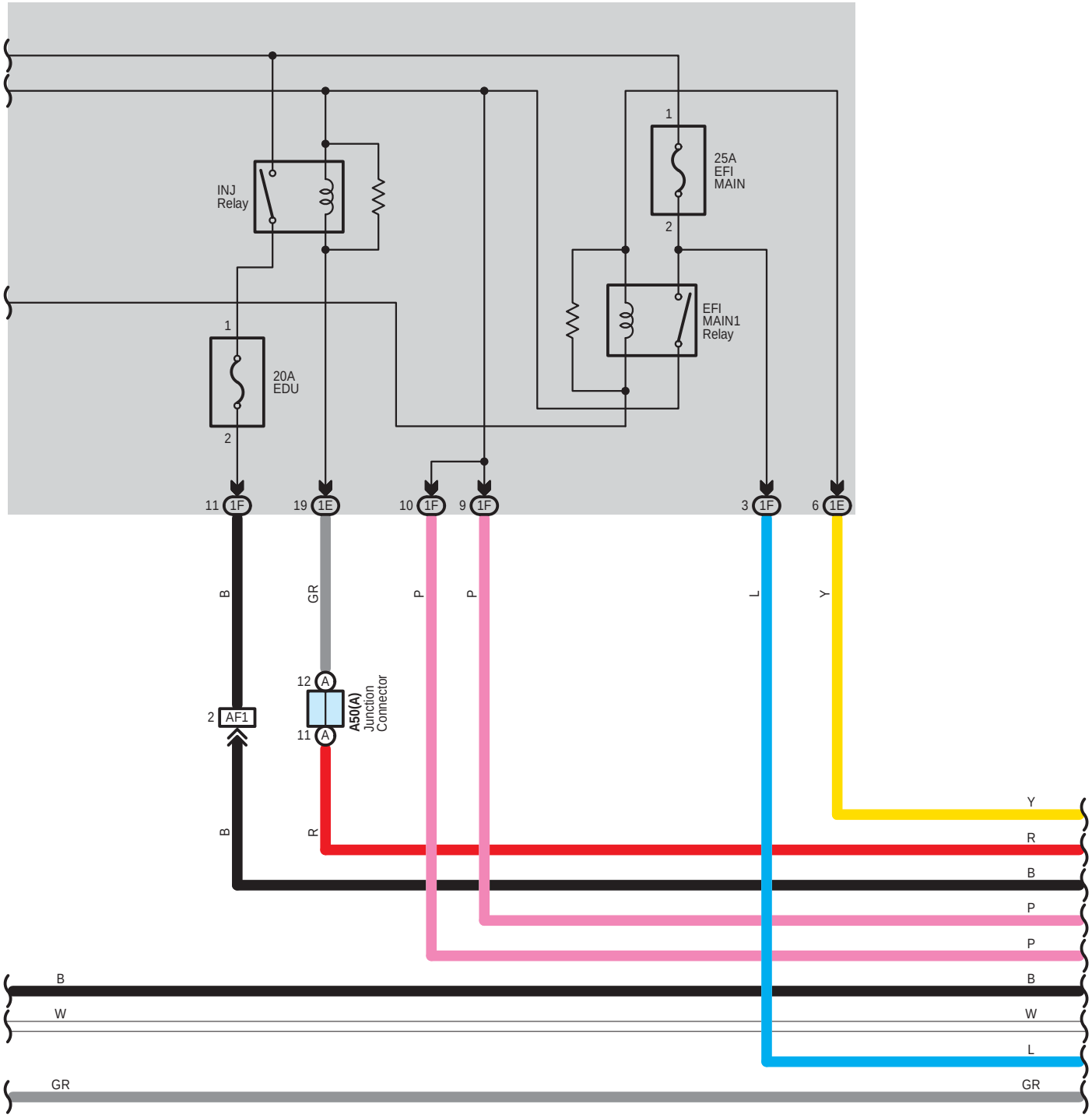
INJ
Relay
1
25A
EFI
MAIN
2
EFI
MAIN1
Relay
1
20A
EDU
2
11 1F
19 1E
10 1F
9 1F
3 1F
6 1E
B
GR
P
P
L
Y
12 A
11 A
A50(A)
Junction
Connector
2 AF1
B
R
Y
R
B
P
P
B
B
W
W
L
GR
GR

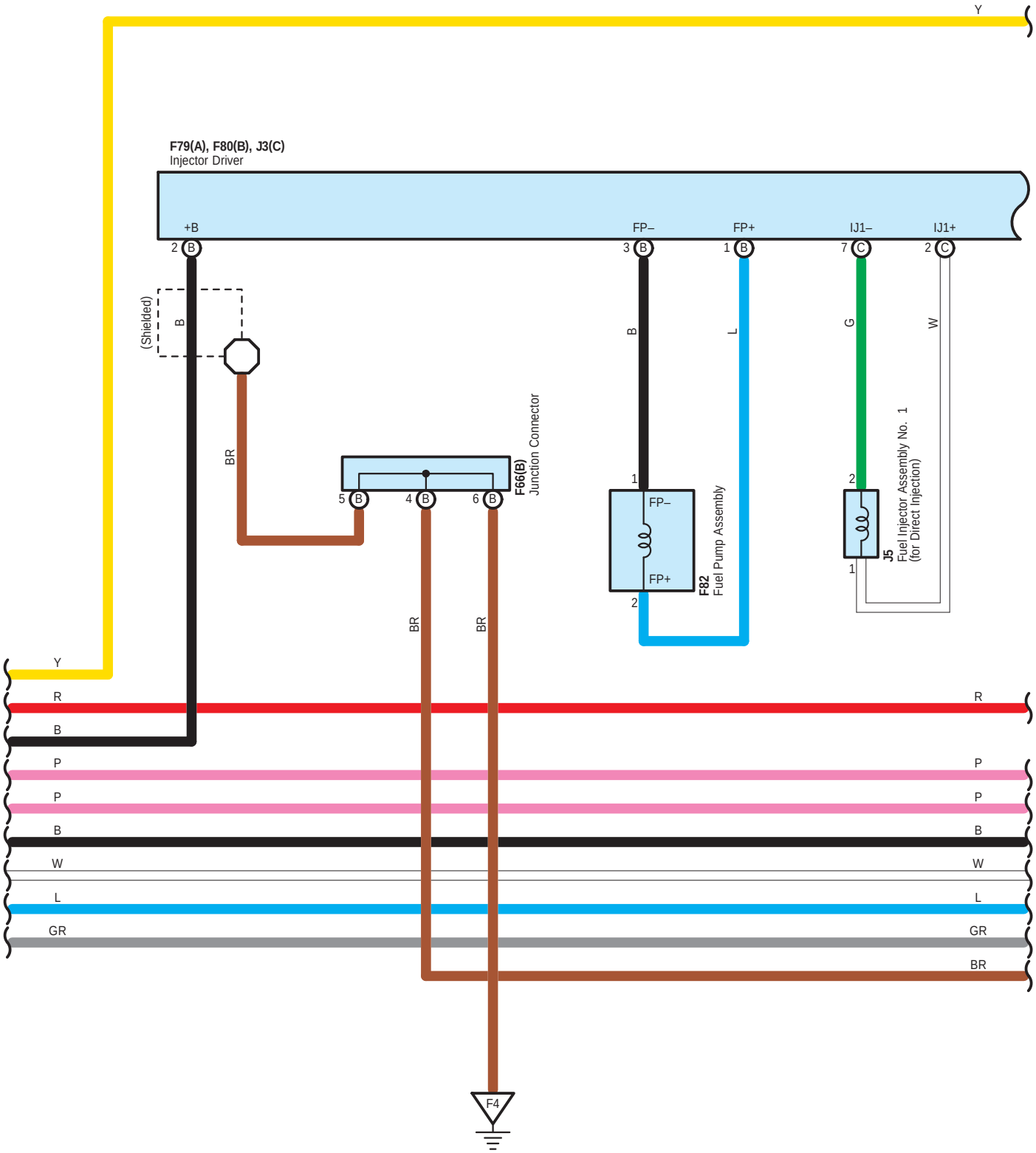
F79(A), F80(B), J3(C)
Injector Driver
+B
FP–
FP+
IJ1–
IJ1+
2 B
3 B
1 B
7 C
2 C
(Shielded)
B
BR
B
L
G
W
F66(B)
Junction Connector
5 B
4 B
6 B
1
FP–
FP+
2
F82
Fuel Pump Assembly
2
1
J5
Fuel Injector Assembly No. 1
(for Direct Injection)
BR
BR
Y
R
B
P
P
B
W
L
GR
Y
R
P
P
B
W
L
GR
BR
F4

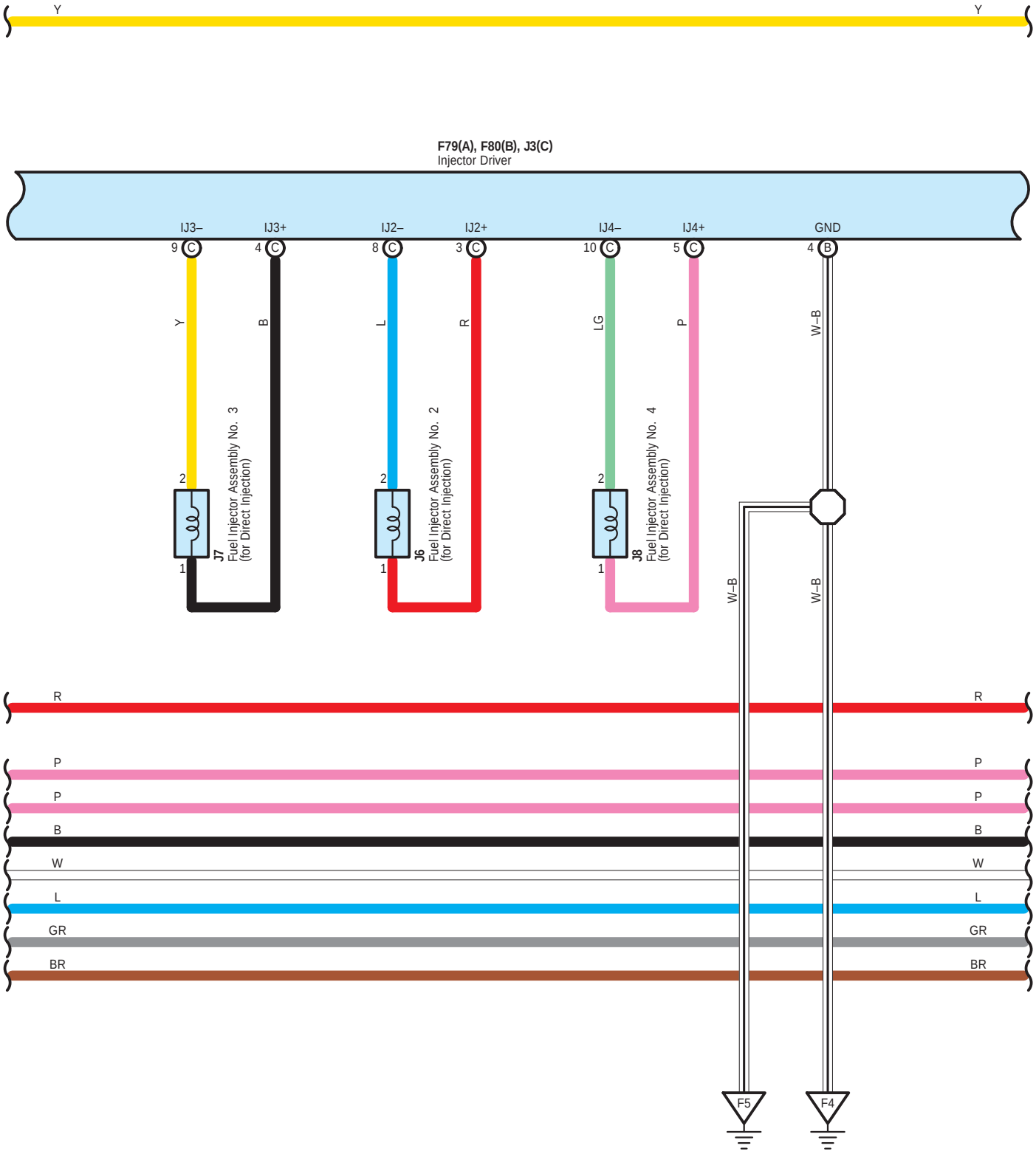
Y
Y
F79(A), F80(B), J3(C)
Injector Driver
IJ3–
IJ3+
IJ2–
IJ2+
IJ4–
IJ4+
GND
9 C
4 C
8 C
3 C
10 C
5 C
4 B
Y
B
L
R
LG
P
W–B
2
1
J7
Fuel Injector Assembly No. 3
(for Direct Injection)
J6
Fuel Injector Assembly No. 2
(for Direct Injection)
J8
Fuel Injector Assembly No. 4
(for Direct Injection)
W–B
W–B
R
R
P
P
P
P
B
B
W
W
L
L
GR
GR
BR
BR
F5
F4

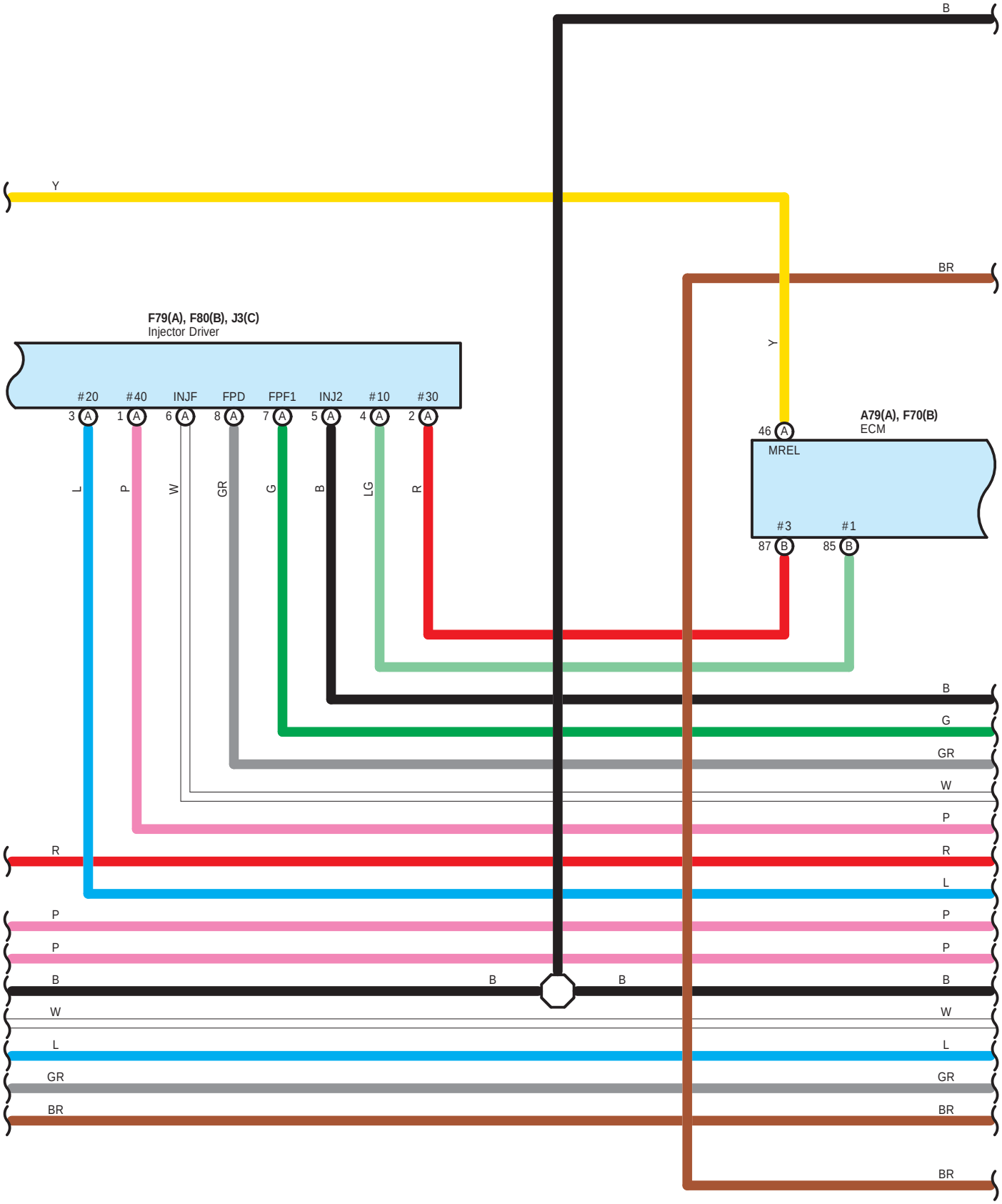
B
Y
BR
F79(A), F80(B), J3(C)
Injector Driver
#20
#40
INJF
FPD
FPF1
INJ2
#10
#30
3 A
1 A
6 A
8 A
7 A
5 A
4 A
2 A
L
P
W
GR
G
B
LG
R
Y
A79(A), F70(B)
ECM
46 A
MREL
#3
#1
87 B
85 B
B
G
GR
W
P
R
R
L
P
P
P
P
B
B
B
B
W
W
L
L
GR
GR
BR
BR
BR

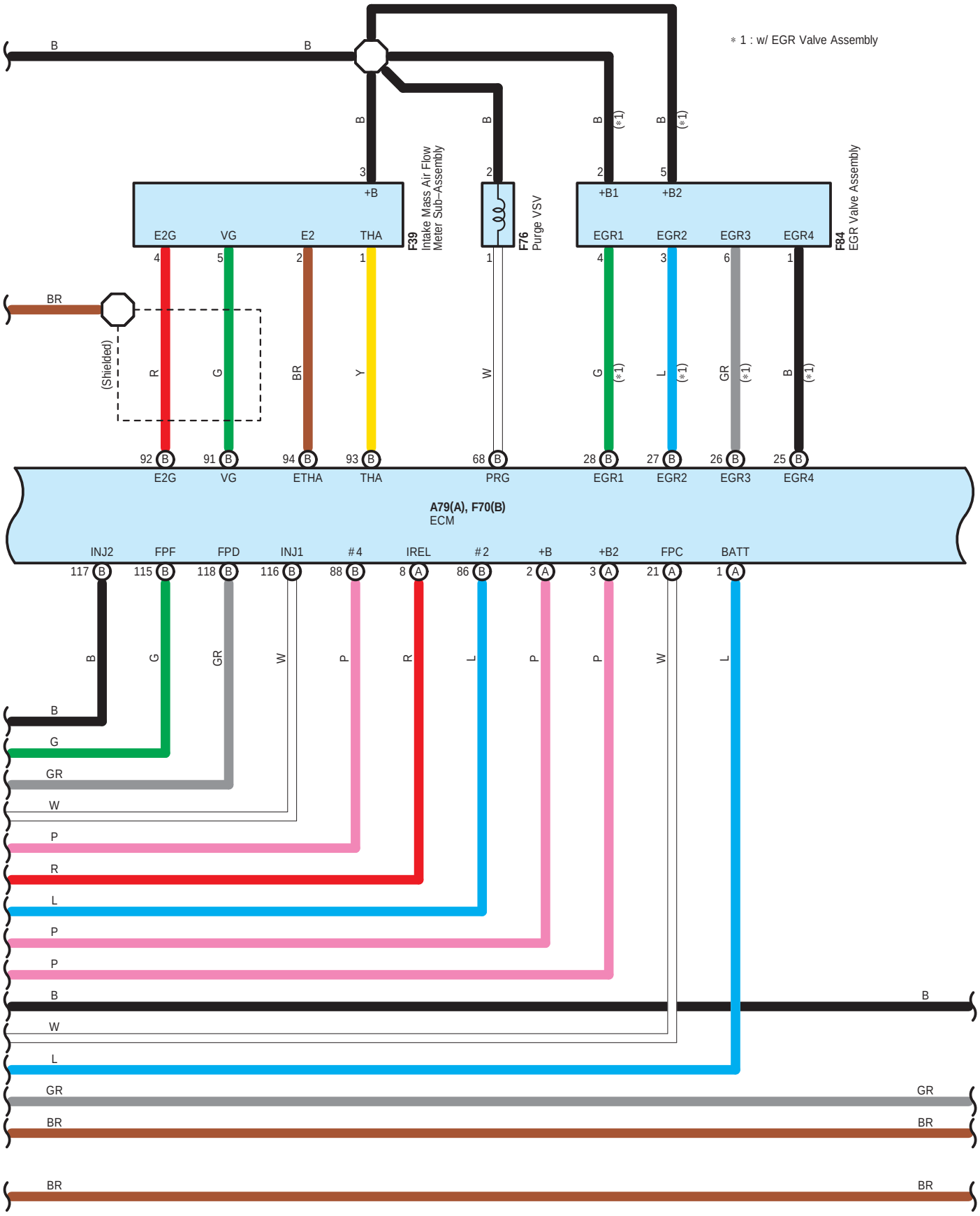
∗1 : w/ EGR Valve Assembly
F39
Intake Mass Air Flow Meter Sub-Assembly
F76
Purge VSV
F84
EGR Valve Assembly
+B
E2G
VG
E2
THA
+B1
+B2
EGR1
EGR2
EGR3
EGR4
(Shielded)
A79(A), F70(B)
ECM
INJ2
FPF
FPD
INJ1
#4
IREL
#2
+B
+B2
FPC
BATT
ETHA
PRG

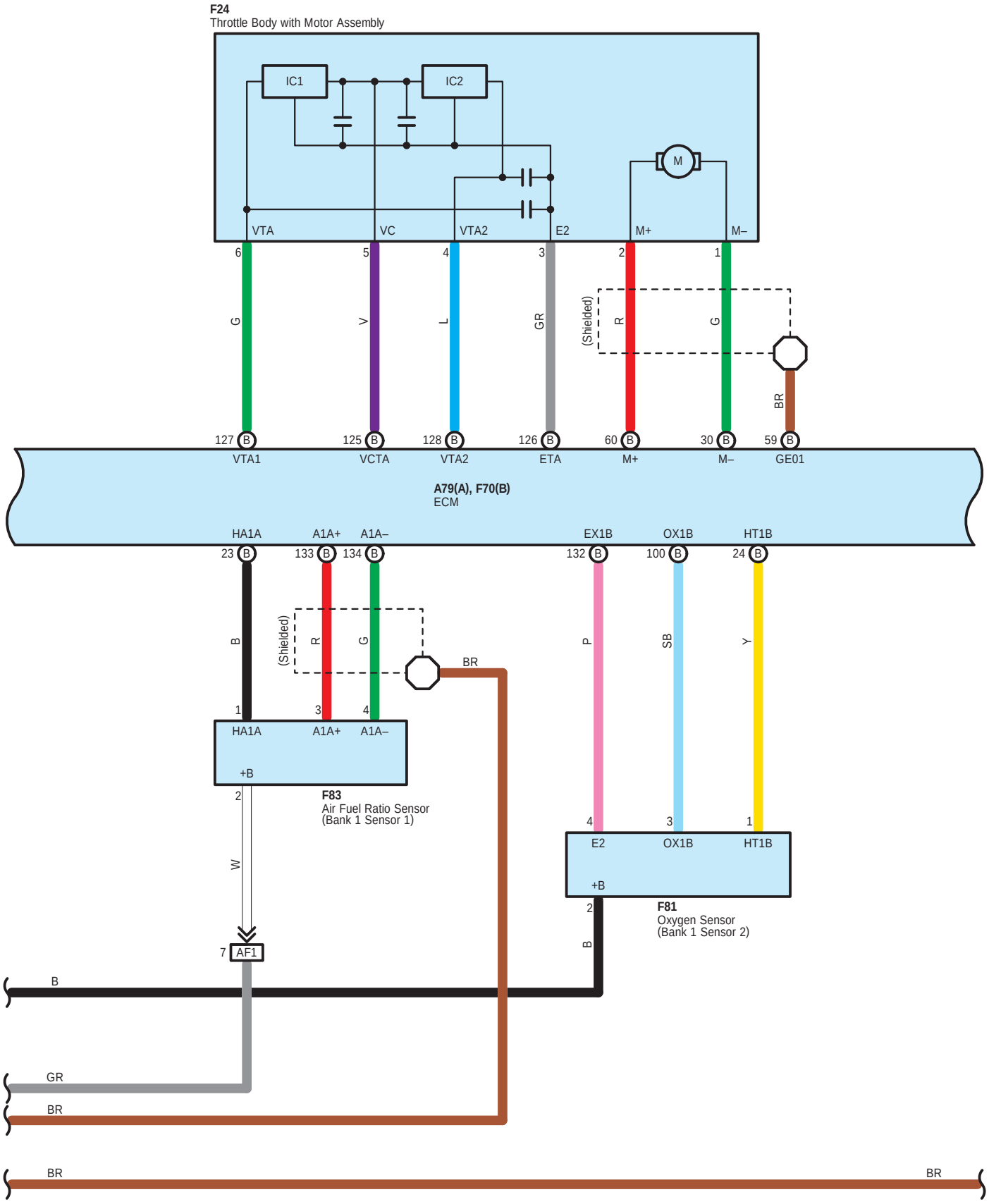
F24
Throttle Body with Motor Assembly
IC1
IC2
M
VTA
VC
VTA2
E2
M+
M–
6
5
4
3
2
1
G
V
L
GR
(Shielded)
R
G
BR
127 B
125 B
128 B
126 B
60 B
30 B
59 B
VTA1
VCTA
VTA2
ETA
M+
M–
GE01
A79(A), F70(B)
ECM
HA1A
A1A+
A1A–
EX1B
OX1B
HT1B
23 B
133 B
134 B
132 B
100 B
24 B
B
(Shielded)
R
G
BR
P
SB
Y
1
3
4
HA1A
A1A+
A1A–
+B
2
F83
Air Fuel Ratio Sensor
(Bank 1 Sensor 1)
4
3
1
E2
OX1B
HT1B
+B
2
F81
Oxygen Sensor
(Bank 1 Sensor 2)
W
B
7 AF1
B
GR
BR
BR
BR

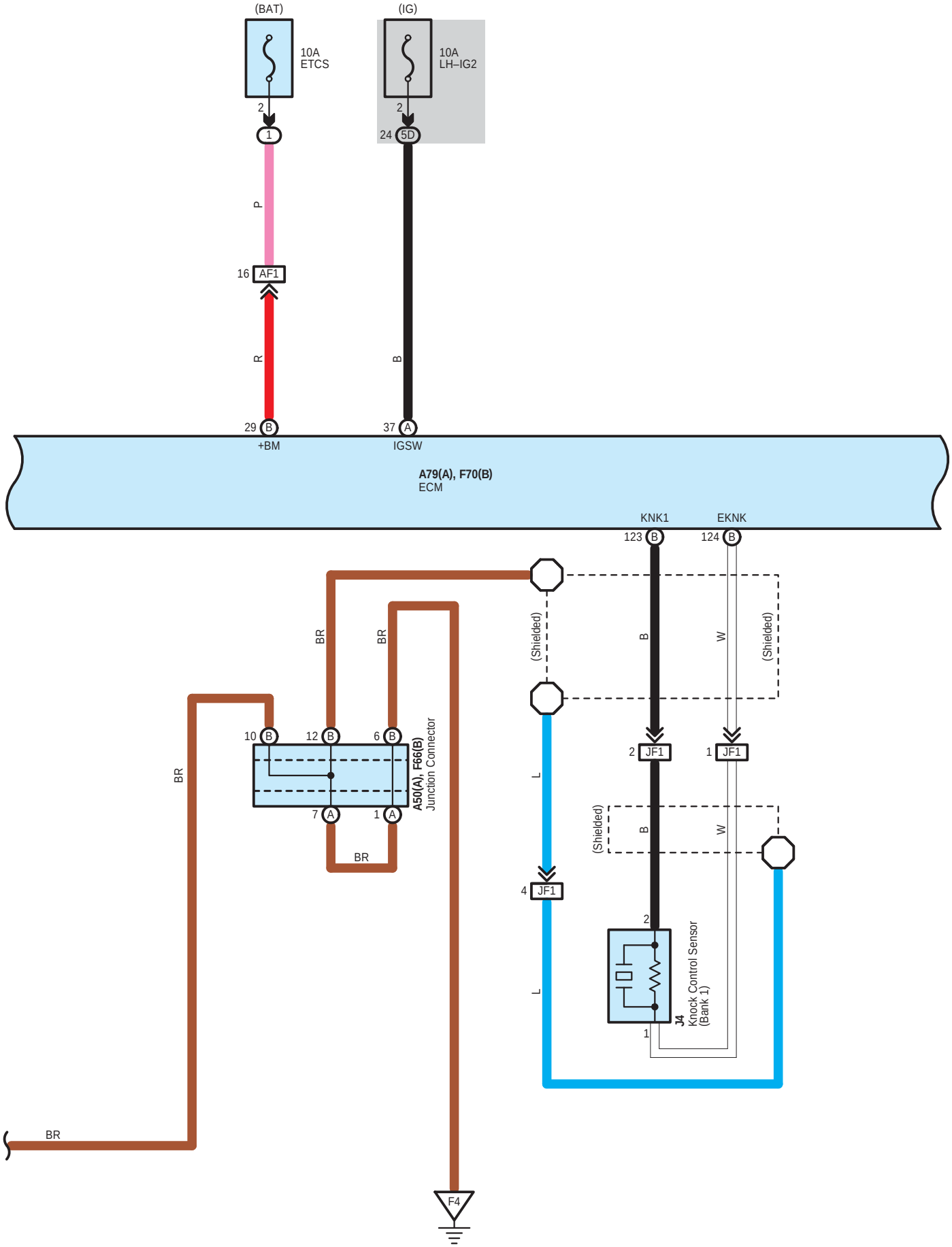
(BAT)
10A
ETCS
(IG)
10A
LH–IG2
2
1
24
5D
P
16
AF1
R
B
29
B
+BM
37
A
IGSW
A79(A), F70(B)
ECM
KNK1
EKNK
123
B
124
B
BR
BR
(Shielded)
B
W
(Shielded)
10
B
12
B
6
B
A50(A), F66(B)
Junction Connector
7
A
1
A
BR
BR
2
JF1
1
JF1
L
(Shielded)
B
W
4
JF1
2
L
Knock Control Sensor
(Bank 1)
J4
1
BR
F4

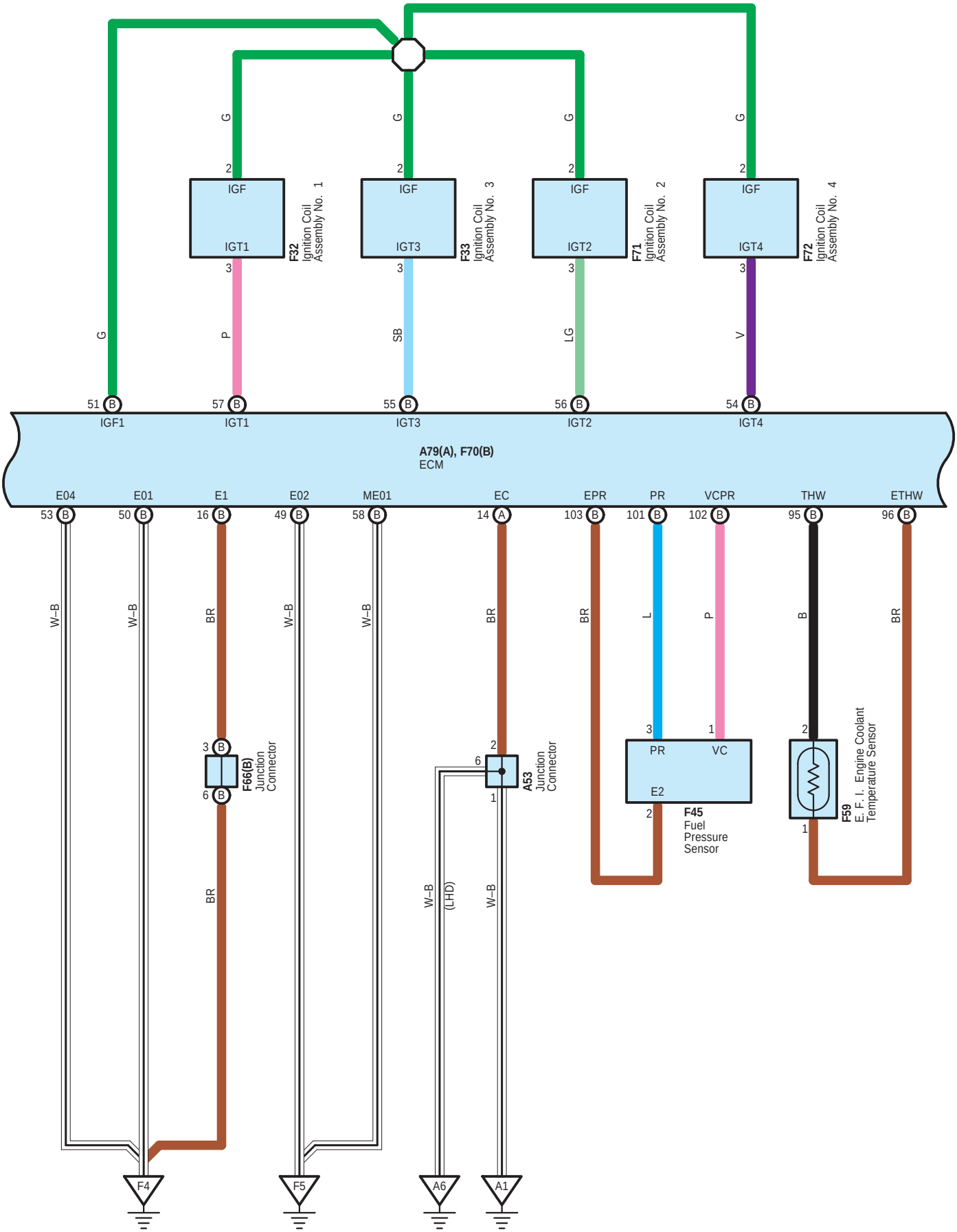
G
2
IGF
IGT1
3
F32
Ignition Coil
Assembly No. 1
G
2
IGF
IGT3
3
F33
Ignition Coil
Assembly No. 3
G
2
IGF
IGT2
3
F71
Ignition Coil
Assembly No. 2
G
2
IGF
IGT4
3
F72
Ignition Coil
Assembly No. 4
G
P
SB
LG
V
51 B IGF1
57 B IGT1
55 B IGT3
56 B IGT2
54 B IGT4
A79(A), F70(B)
ECM
E04 53 B
E01 50 B
E1 16 B
E02 49 B
ME01 58 B
EC 14 A
EPR 103 B
PR 101 B
VCPR 102 B
THW 95 B
ETHW 96 B
W–B
W–B
BR
W–B
W–B
BR
BR
L
P
B
BR
3 B
6 B
F66(B)
Junction
Connector
BR
2
6
1
A53
Junction
Connector
W–B
(LHD)
W–B
3
1
PR
VC
E2
2
F45
Fuel
Pressure
Sensor
2
1
F59
E. F. I. Engine Coolant
Temperature Sensor
F4
F5
A6
A1

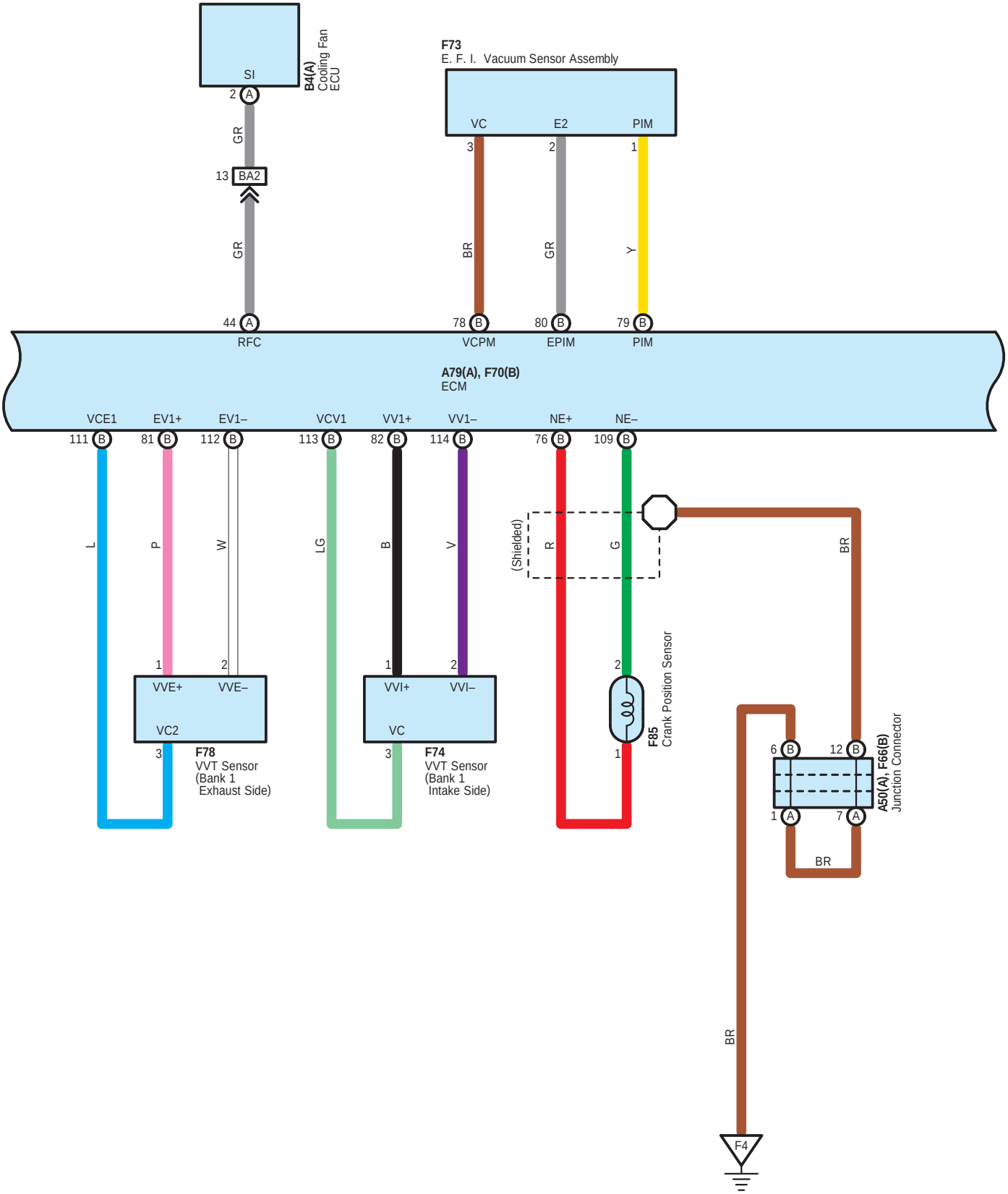
B4(A)
Cooling Fan
ECU
SI
2 A
GR
13 BA2
GR
44 A
RFC
F73
E. F. I. Vacuum Sensor Assembly
VC
E2
PIM
3
2
1
BR
GR
Y
78 B
80 B
79 B
VCPM
EPIM
PIM
A79(A), F70(B)
ECM
VCE1
EV1+
EV1–
VCV1
VV1+
VV1–
NE+
NE–
111 B
81 B
112 B
113 B
82 B
114 B
76 B
109 B
L
P
W
LG
B
V
(Shielded)
R
G
BR
1
2
VVE+
VVE–
VC2
3
F78
VVT Sensor
(Bank 1
Exhaust Side)
1
2
VVI+
VVI–
VC
3
F74
VVT Sensor
(Bank 1
Intake Side)
2
1
F85
Crank Position Sensor
6 B
12 B
1 A
7 A
A50(A), F66(B)
Junction Connector
BR
BR
F4

＊2 : w/ Adaptive Variable Suspension
＊3 : w/o Adaptive Variable Suspension

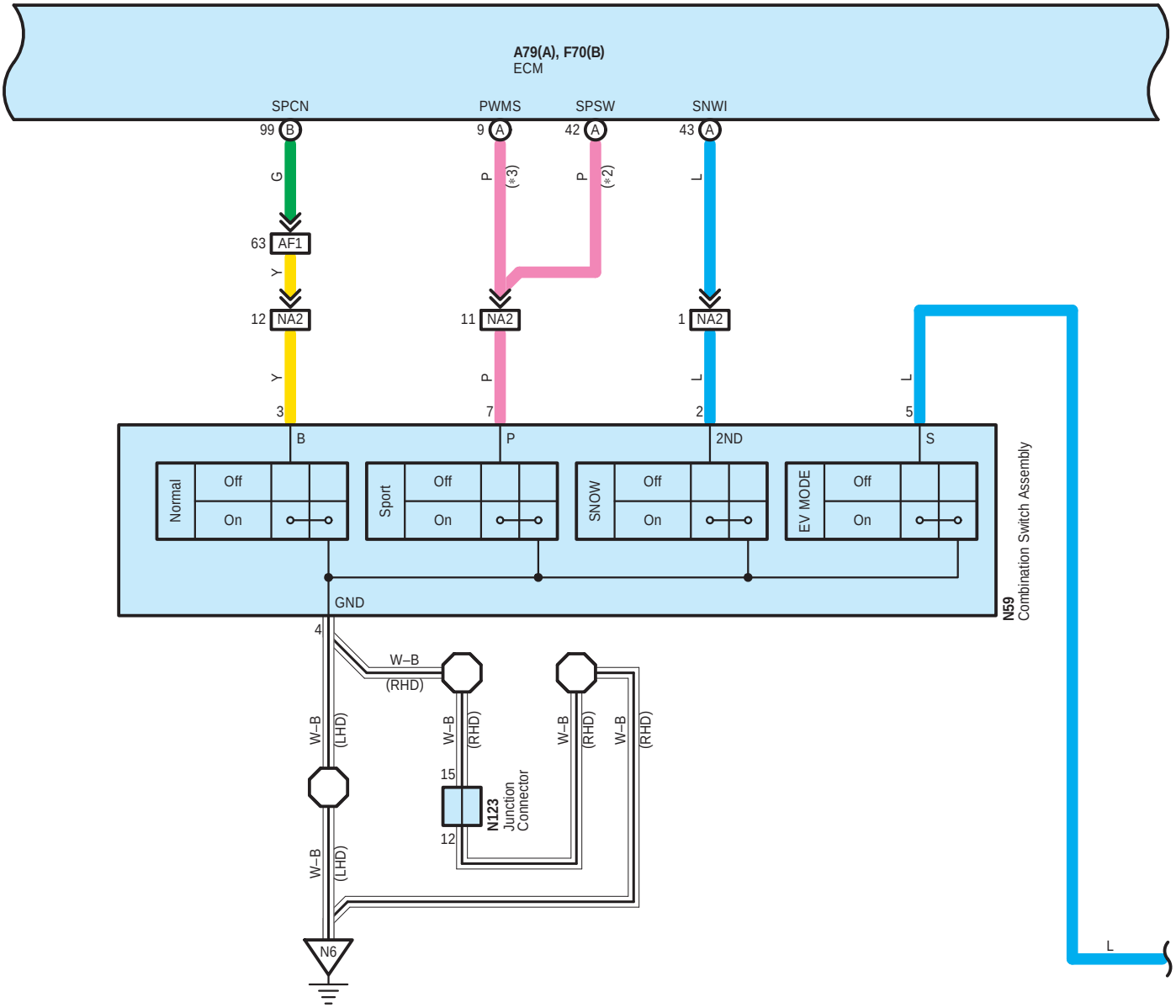

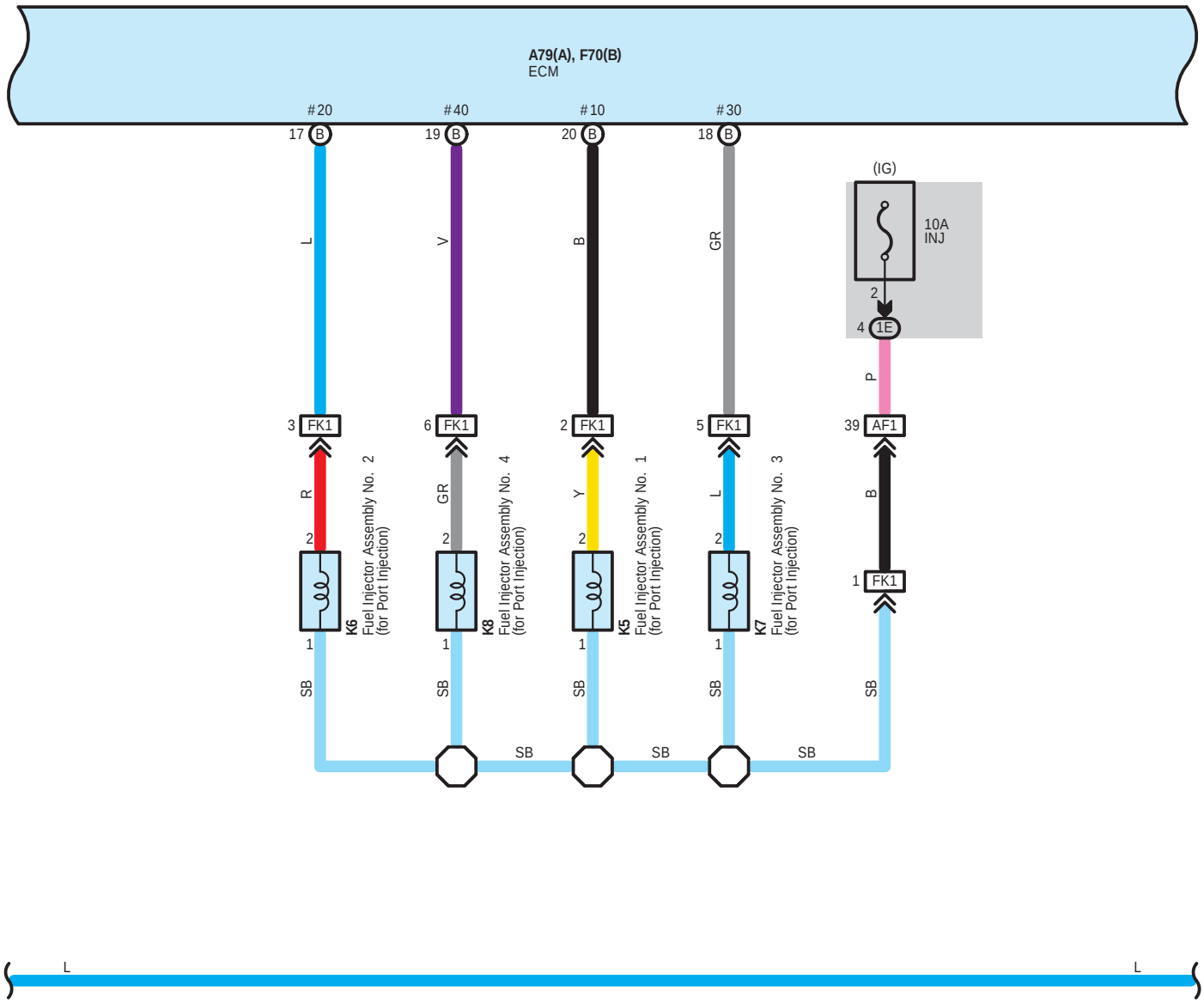
A79(A), F70(B)
ECM
#20
#40
#10
#30
17 B
19 B
20 B
18 B
L
V
B
GR
(IG)
10A
INJ
2
4 1E
P
3 FK1
6 FK1
2 FK1
5 FK1
39 AF1
R
GR
Y
L
B
2
1
K6
Fuel Injector Assembly No. 2
(for Port Injection)
K8
Fuel Injector Assembly No. 4
(for Port Injection)
K5
Fuel Injector Assembly No. 1
(for Port Injection)
K7
Fuel Injector Assembly No. 3
(for Port Injection)
1 FK1
SB
L

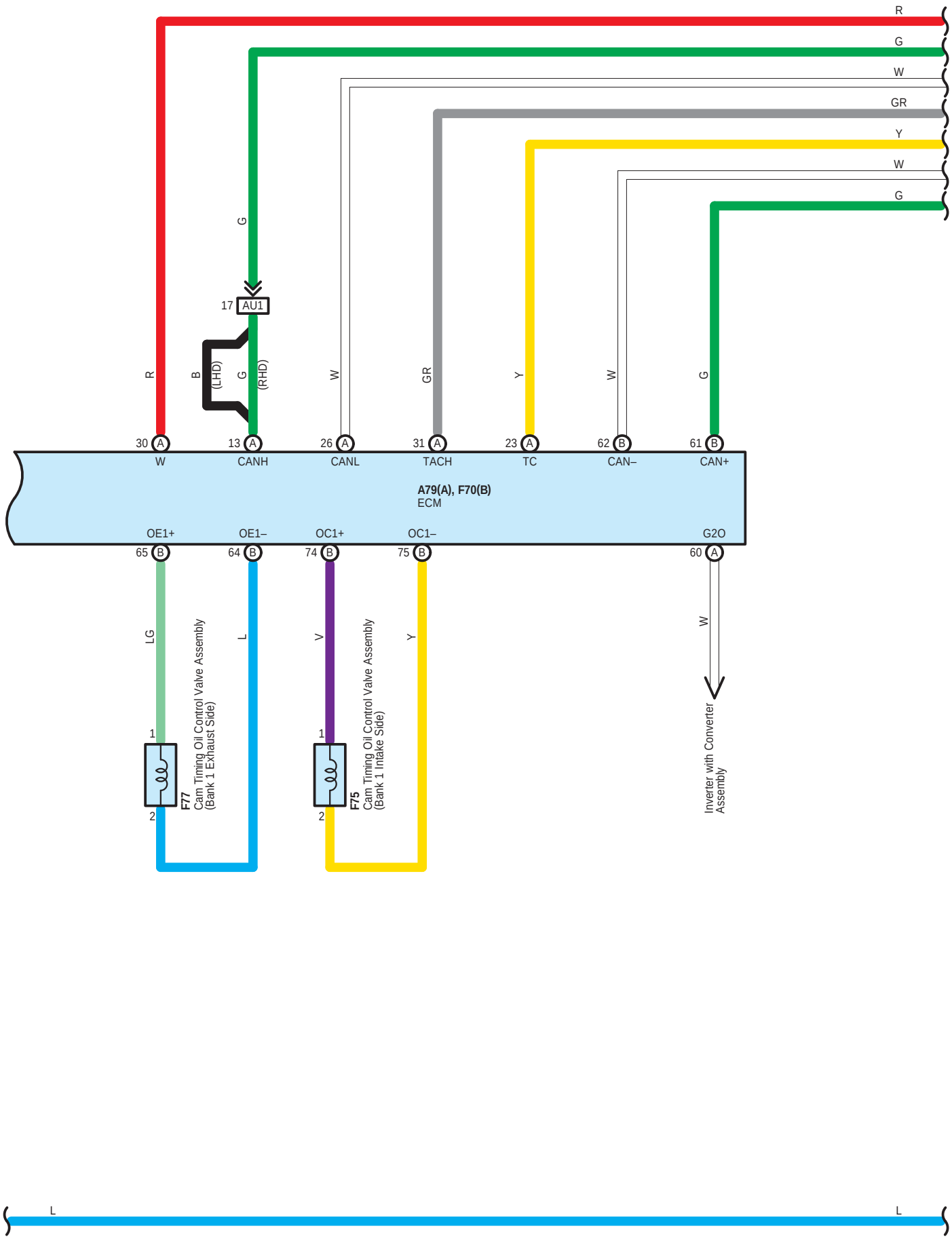
R
G
W
GR
Y
W
G
17 AU1
R
B (LHD)
G (RHD)
W
GR
Y
W
G
30 A W
13 A CANH
26 A CANL
31 A TACH
23 A TC
62 B CAN–
61 B CAN+
A79(A), F70(B)
ECM
OE1+
OE1–
OC1+
OC1–
G2O
65 B
64 B
74 B
75 B
60 A
LG
L
V
Y
W
1
2
F77
Cam Timing Oil Control Valve Assembly
(Bank 1 Exhaust Side)
1
2
F75
Cam Timing Oil Control Valve Assembly
(Bank 1 Intake Side)
Inverter with Converter
Assembly
L
L

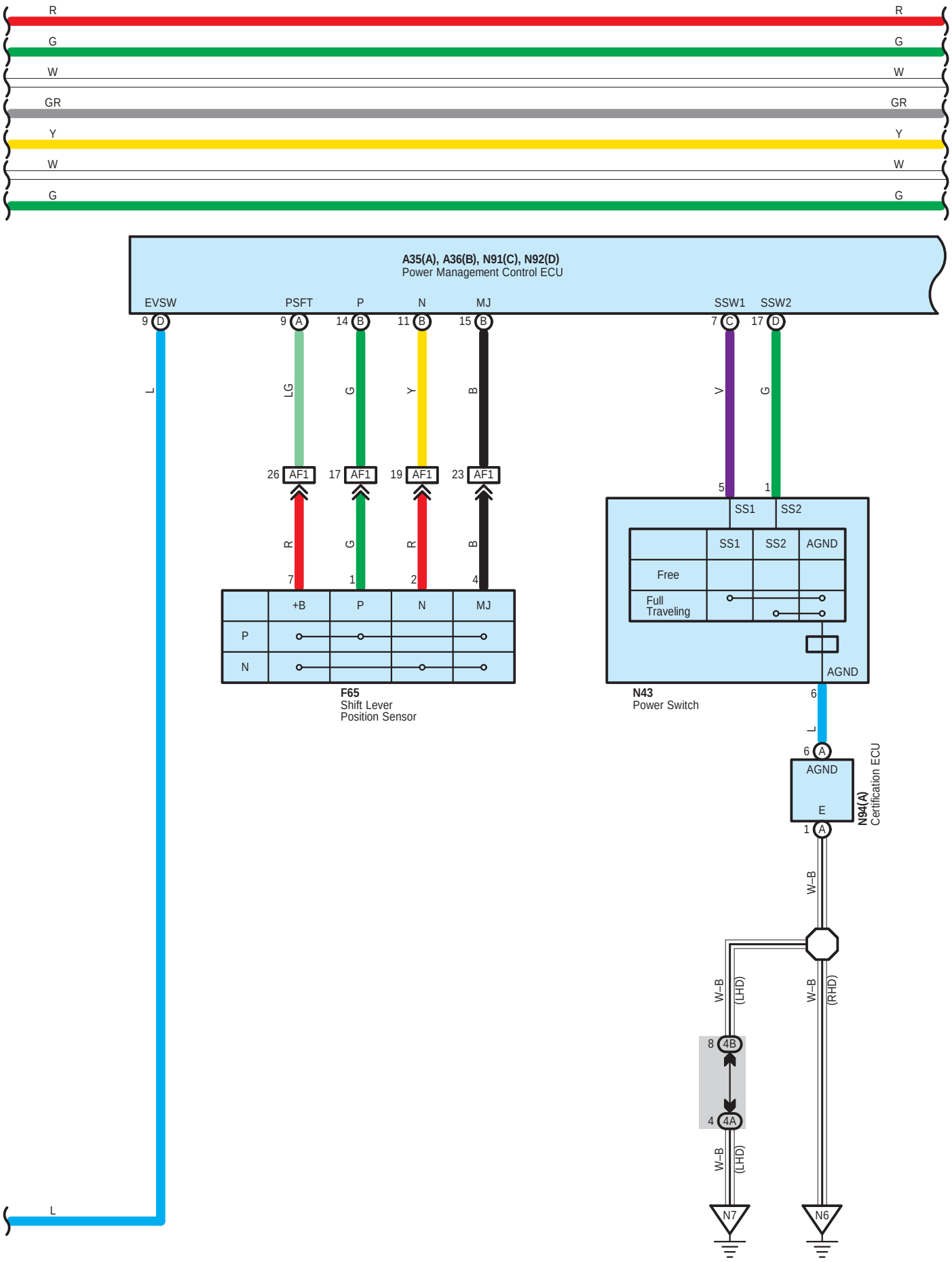
R
G
W
GR
Y
W
G
A35(A), A36(B), N91(C), N92(D)
Power Management Control ECU
EVSW
PSFT
P
N
MJ
SSW1
SSW2
9 D
9 A
14 B
11 B
15 B
7 C
17 D
L
LG
G
Y
B
V
G
26 AF1
17 AF1
19 AF1
23 AF1
R
G
R
B
7
1
2
4
+B
P
N
MJ
P
N
F65
Shift Lever
Position Sensor
5
1
SS1
SS2
SS1
SS2
AGND
Free
Full
Traveling
AGND
N43
Power Switch
6
L
6 A
AGND
E
1 A
N94(A)
Certification ECU
W–B
W–B
(LHD)
W–B
(RHD)
8 4B
4 4A
W–B
(LHD)
N7
N6
L

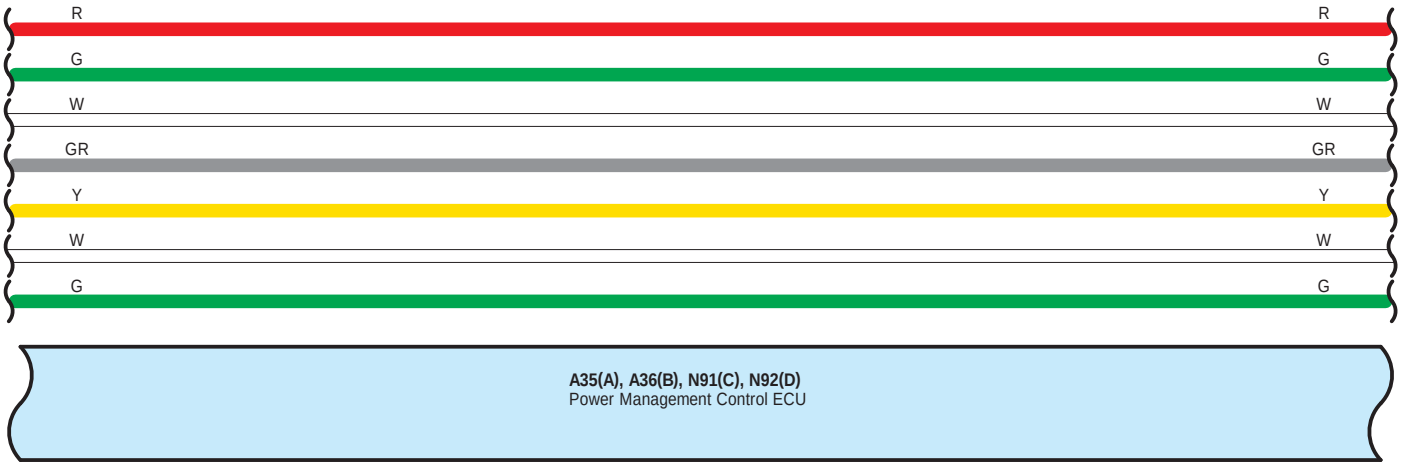
R
G
W
GR
Y
W
G
A35(A), A36(B), N91(C), N92(D)
Power Management Control ECU

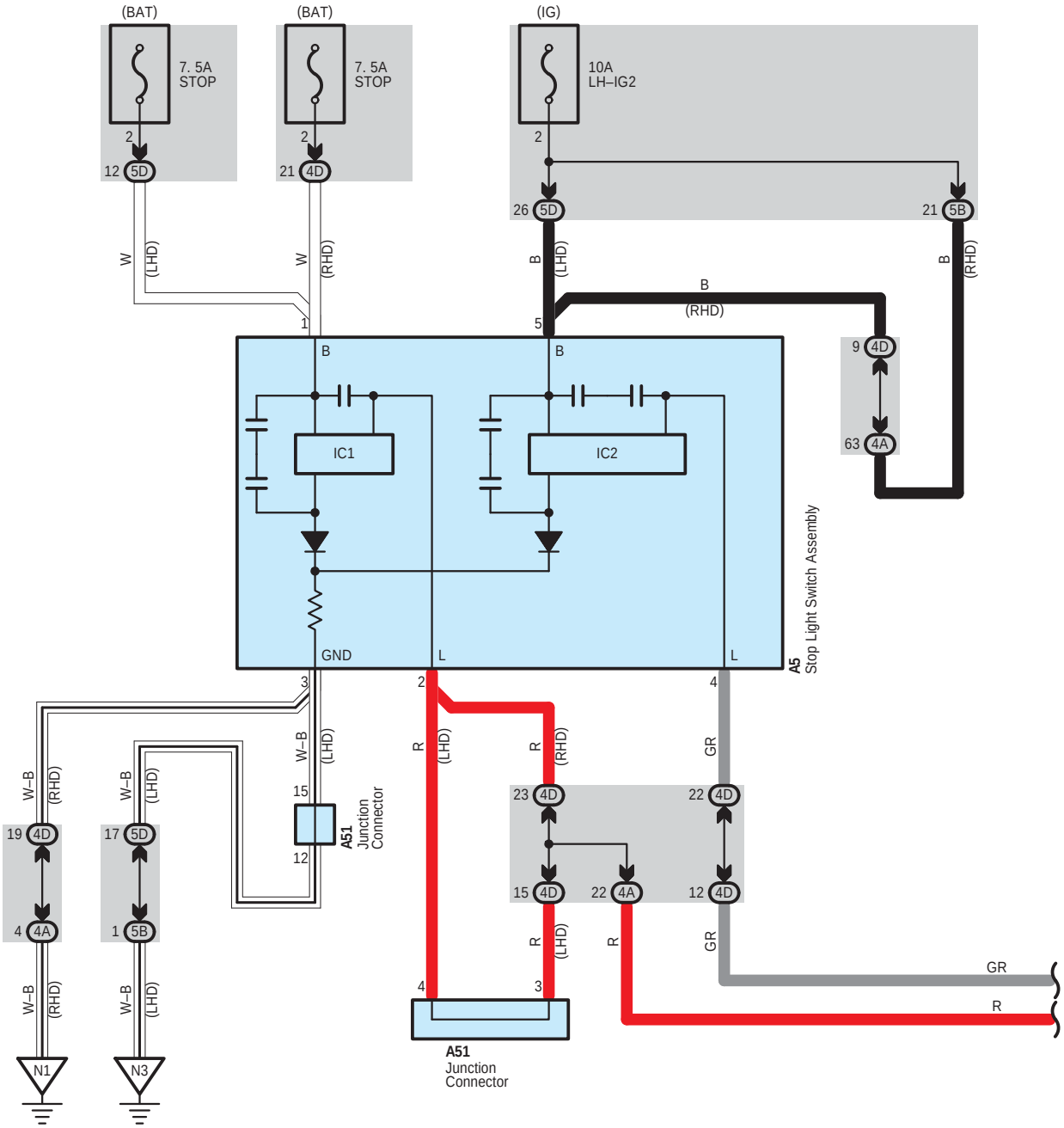
(BAT)
7. 5A
STOP
(BAT)
7. 5A
STOP
(IG)
10A
LH–IG2
IC1
IC2
GND
A5
Stop Light Switch Assembly
A51
Junction
Connector
N1
N3

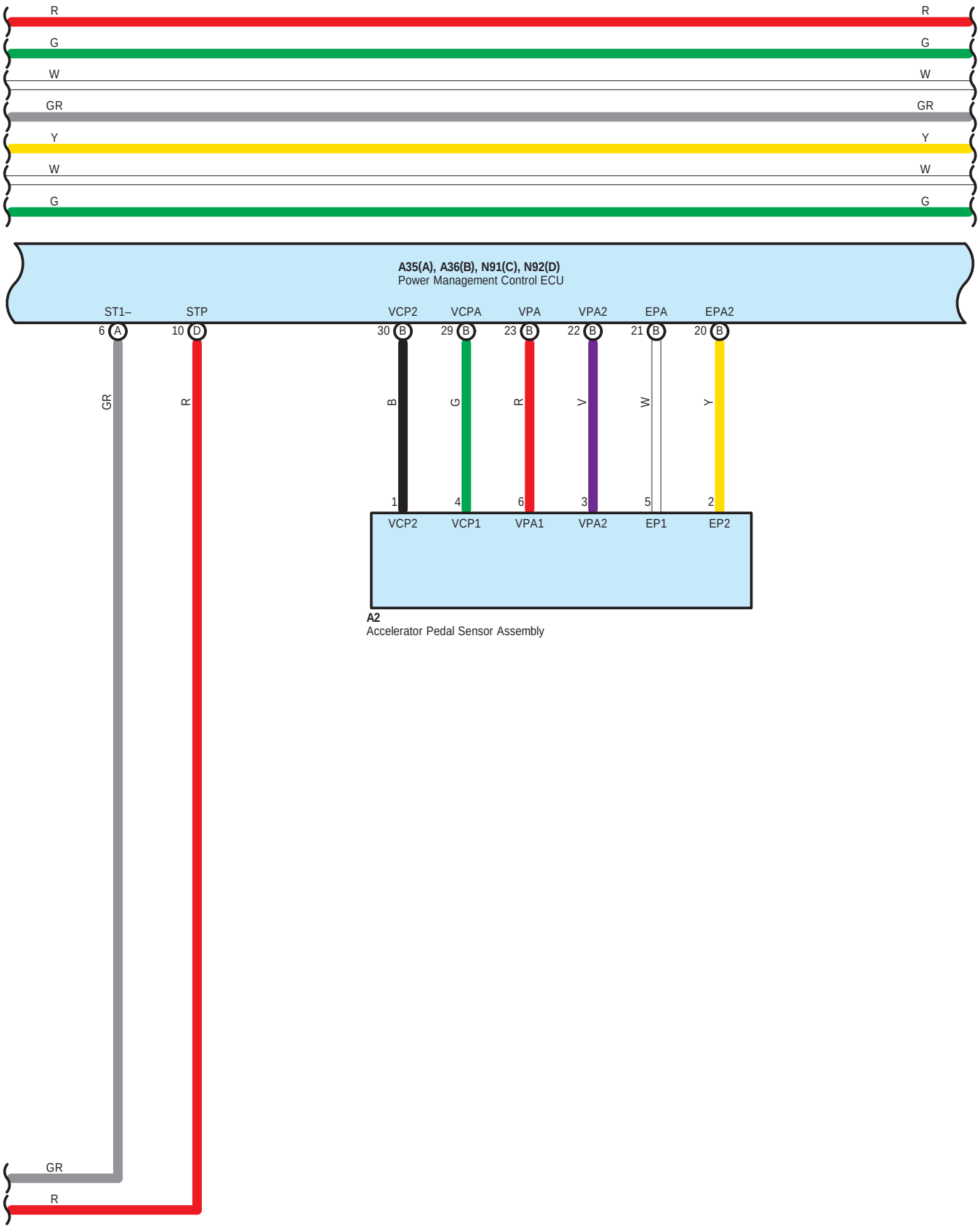
R
G
W
GR
Y
W
G
A35(A), A36(B), N91(C), N92(D)
Power Management Control ECU
ST1–
STP
VCP2
VCPA
VPA
VPA2
EPA
EPA2
6 A
10 D
30 B
29 B
23 B
22 B
21 B
20 B
GR
R
B
G
R
V
W
Y
1
4
6
3
5
2
VCP2
VCP1
VPA1
VPA2
EP1
EP2
A2
Accelerator Pedal Sensor Assembly
GR
R

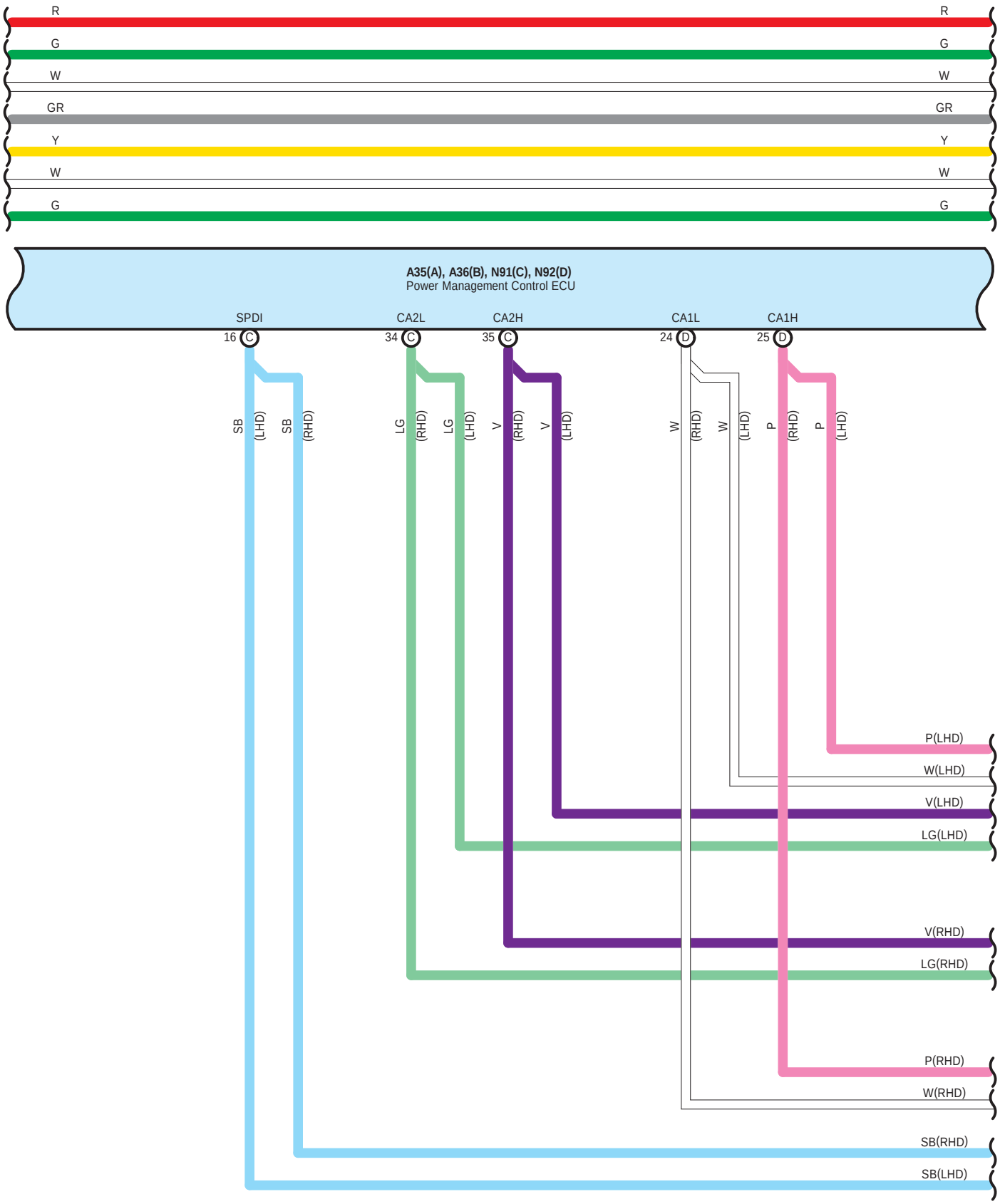
R
G
W
GR
Y
W
G
A35(A), A36(B), N91(C), N92(D)
Power Management Control ECU
SPDI
CA2L
CA2H
CA1L
CA1H
16 C
34 C
35 C
24 D
25 D
SB (LHD)
SB (RHD)
LG (RHD)
LG (LHD)
V (RHD)
V (LHD)
W (RHD)
W (LHD)
P (RHD)
P (LHD)
P(LHD)
W(LHD)
V(LHD)
LG(LHD)
V(RHD)
LG(RHD)
P(RHD)
W(RHD)
SB(RHD)
SB(LHD)

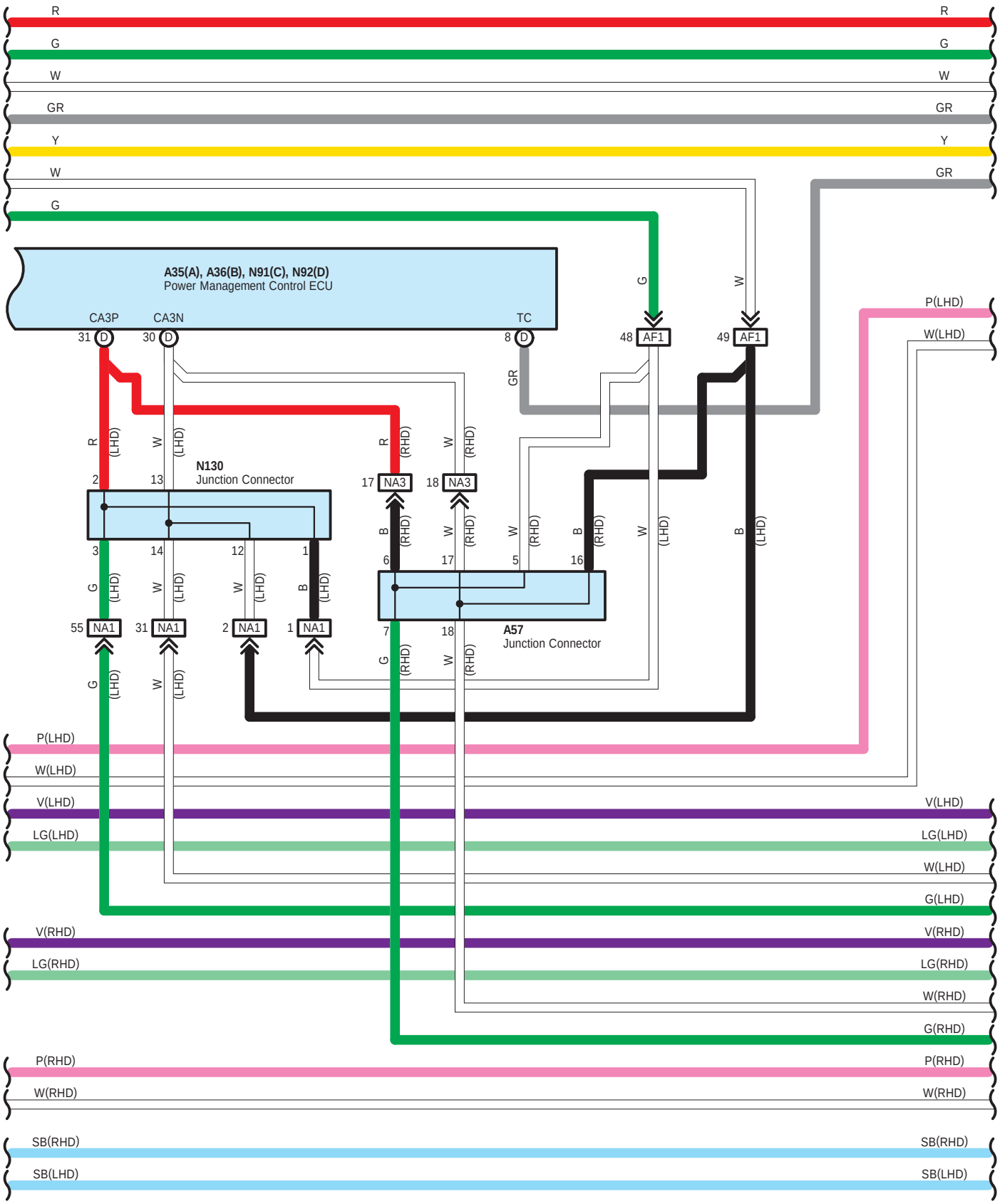
A35(A), A36(B), N91(C), N92(D)
Power Management Control ECU
CA3P
CA3N
TC
31 D
30 D
8 D
48 AF1
49 AF1
N130
Junction Connector
17 NA3
18 NA3
A57
Junction Connector
55 NA1
31 NA1
2 NA1
1 NA1
R
G
W
GR
Y
P(LHD)
W(LHD)
V(LHD)
LG(LHD)
G(LHD)
V(RHD)
LG(RHD)
W(RHD)
G(RHD)
P(RHD)
SB(RHD)
SB(LHD)

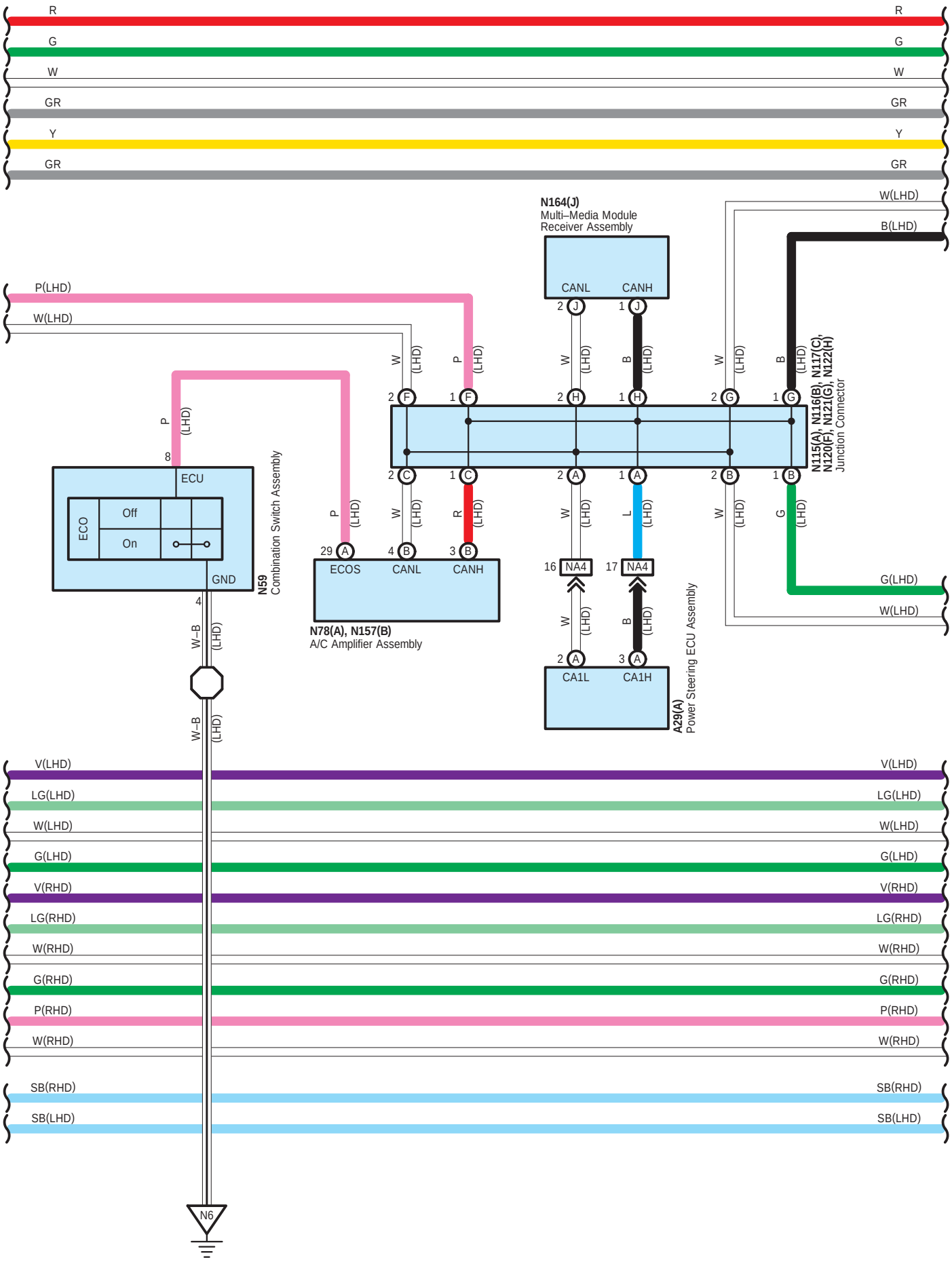
R
G
W
GR
Y
GR
N164(J)
Multi–Media Module
Receiver Assembly
CANL
CANH
W(LHD)
B(LHD)
P(LHD)
W(LHD)
N115(A), N116(B), N117(C),
N120(F), N121(G), N122(H)
Junction Connector
ECU
Off
ECO
On
GND
N59
Combination Switch Assembly
ECOS
CANL
CANH
N78(A), N157(B)
A/C Amplifier Assembly
NA4
NA4
CA1L
CA1H
A29(A)
Power Steering ECU Assembly
G(LHD)
W(LHD)
W–B
(LHD)
V(LHD)
LG(LHD)
W(LHD)
G(LHD)
V(RHD)
LG(RHD)
W(RHD)
G(RHD)
P(RHD)
W(RHD)
SB(RHD)
SB(LHD)
N6

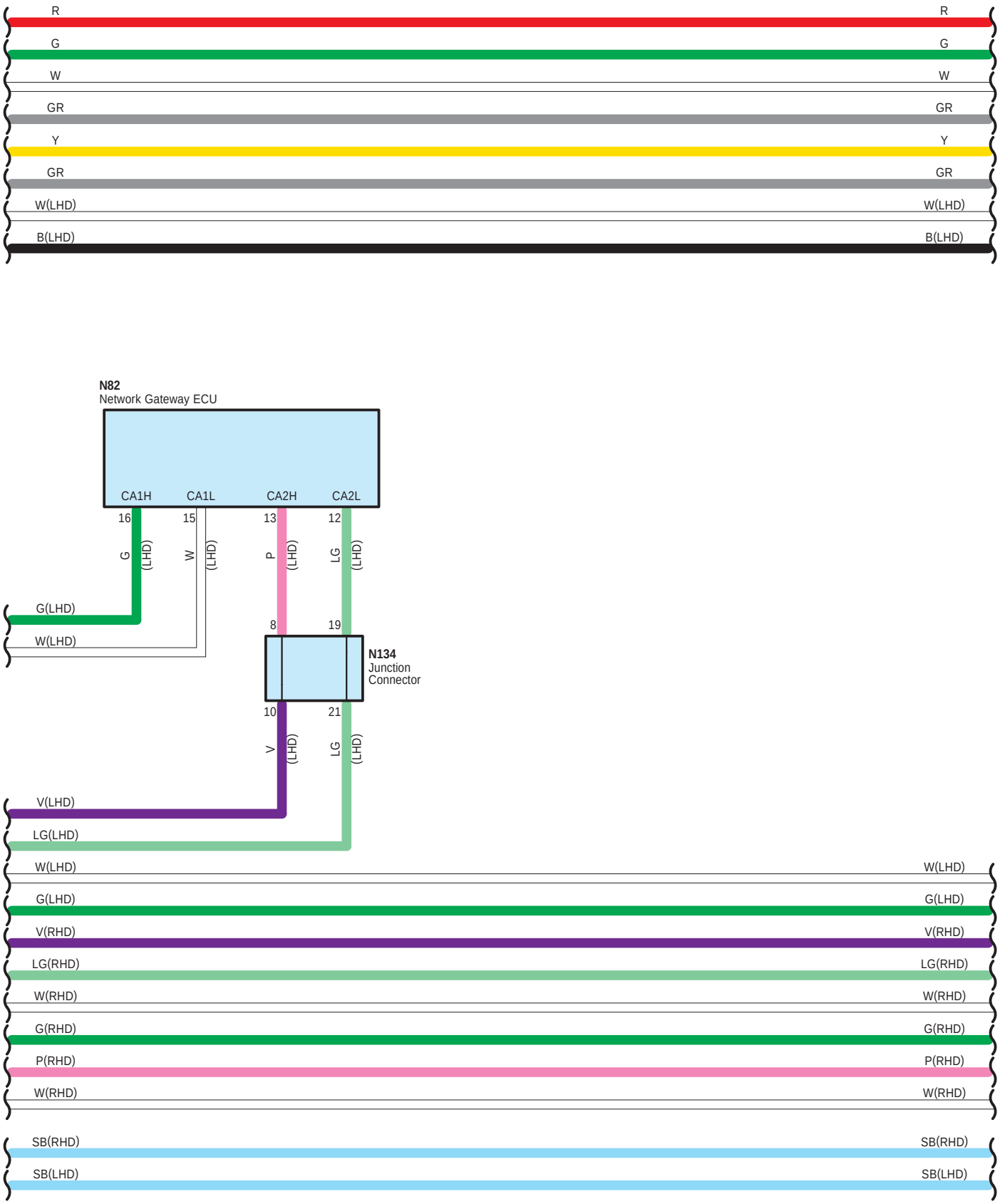
R
G
W
GR
Y
GR
W(LHD)
B(LHD)
N82
Network Gateway ECU
CA1H
CA1L
CA2H
CA2L
16
15
13
12
G
(LHD)
W
(LHD)
P
(LHD)
LG
(LHD)
G(LHD)
W(LHD)
8
19
N134
Junction
Connector
10
21
V
(LHD)
LG
(LHD)
V(LHD)
LG(LHD)
W(LHD)
G(LHD)
V(RHD)
LG(RHD)
W(RHD)
G(RHD)
P(RHD)
W(RHD)
SB(RHD)
SB(LHD)

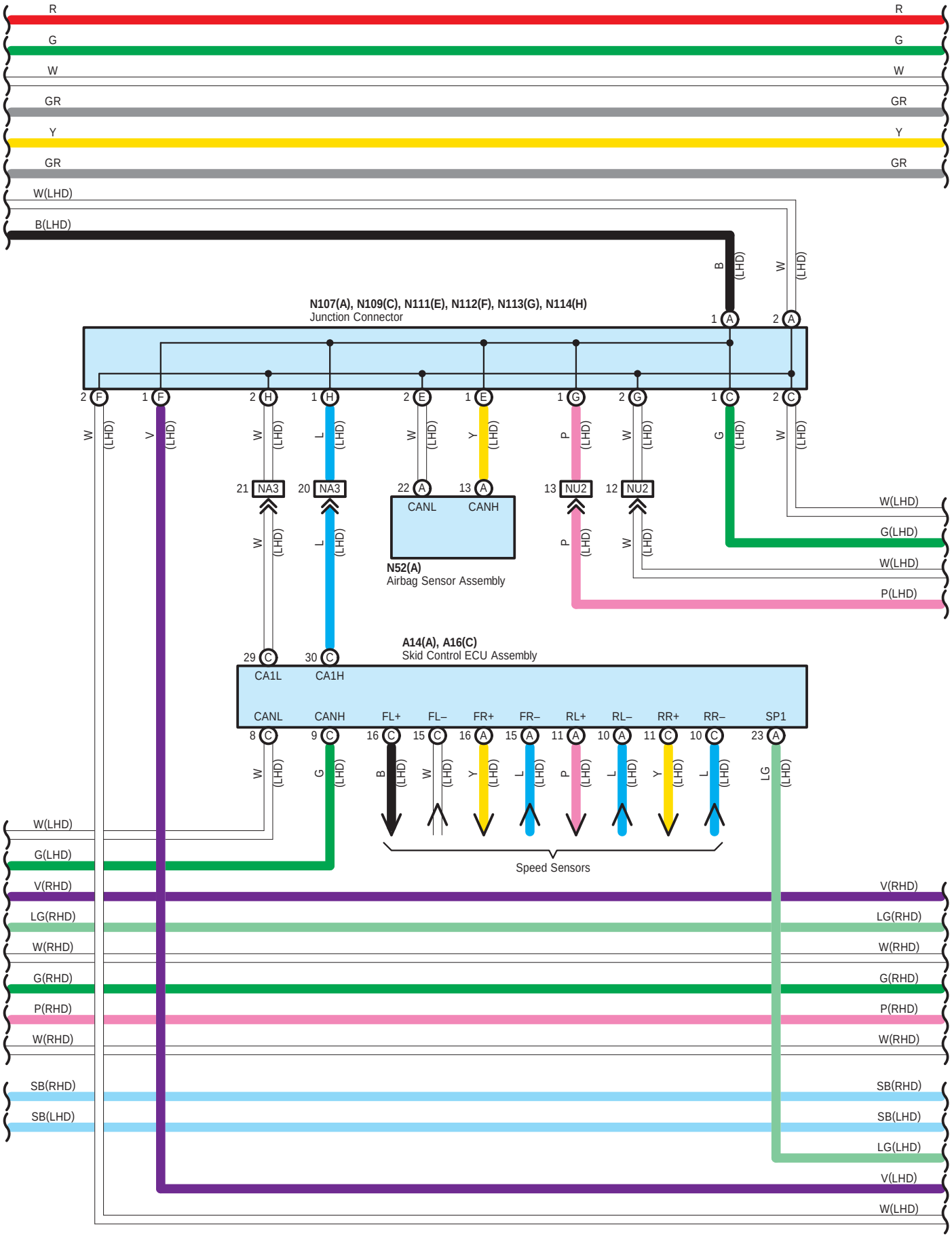
R
G
W
GR
Y
GR
W(LHD)
B(LHD)
N107(A), N109(C), N111(E), N112(F), N113(G), N114(H)
Junction Connector
NA3
NU2
CANL
CANH
N52(A)
Airbag Sensor Assembly
A14(A), A16(C)
Skid Control ECU Assembly
CA1L
CA1H
FL+
FL–
FR+
FR–
RL+
RL–
RR+
RR–
SP1
Speed Sensors
G(LHD)
V(RHD)
LG(RHD)
W(RHD)
G(RHD)
P(RHD)
SB(RHD)
SB(LHD)
LG(LHD)
V(LHD)
P(LHD)

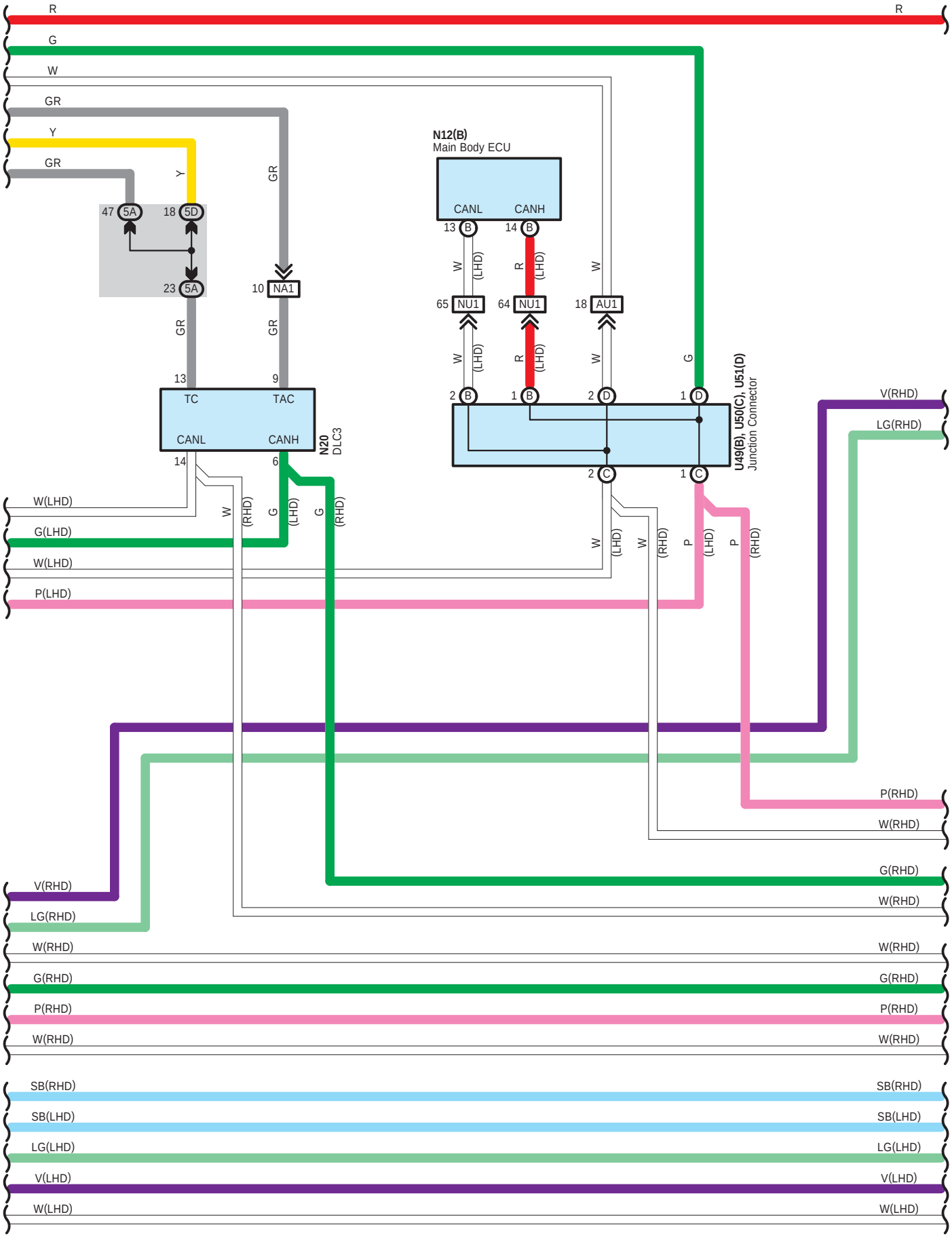
R
G
W
GR
Y
GR
47 5A
18 5D
23 5A
10 NA1
13
9
TC
TAC
CANL
CANH
N20
DLC3
14
6
N12(B)
Main Body ECU
CANL
CANH
13 B
14 B
65 NU1
64 NU1
18 AU1
2 B
1 B
2 D
1 D
2 C
1 C
U49(B), U50(C), U51(D)
Junction Connector
W(LHD)
G(LHD)
W(LHD)
P(LHD)
V(RHD)
LG(RHD)
P(RHD)
W(RHD)
G(RHD)
W(RHD)
V(RHD)
LG(RHD)
W(RHD)
G(RHD)
P(RHD)
W(RHD)
SB(RHD)
SB(LHD)
LG(LHD)
V(LHD)
W(LHD)

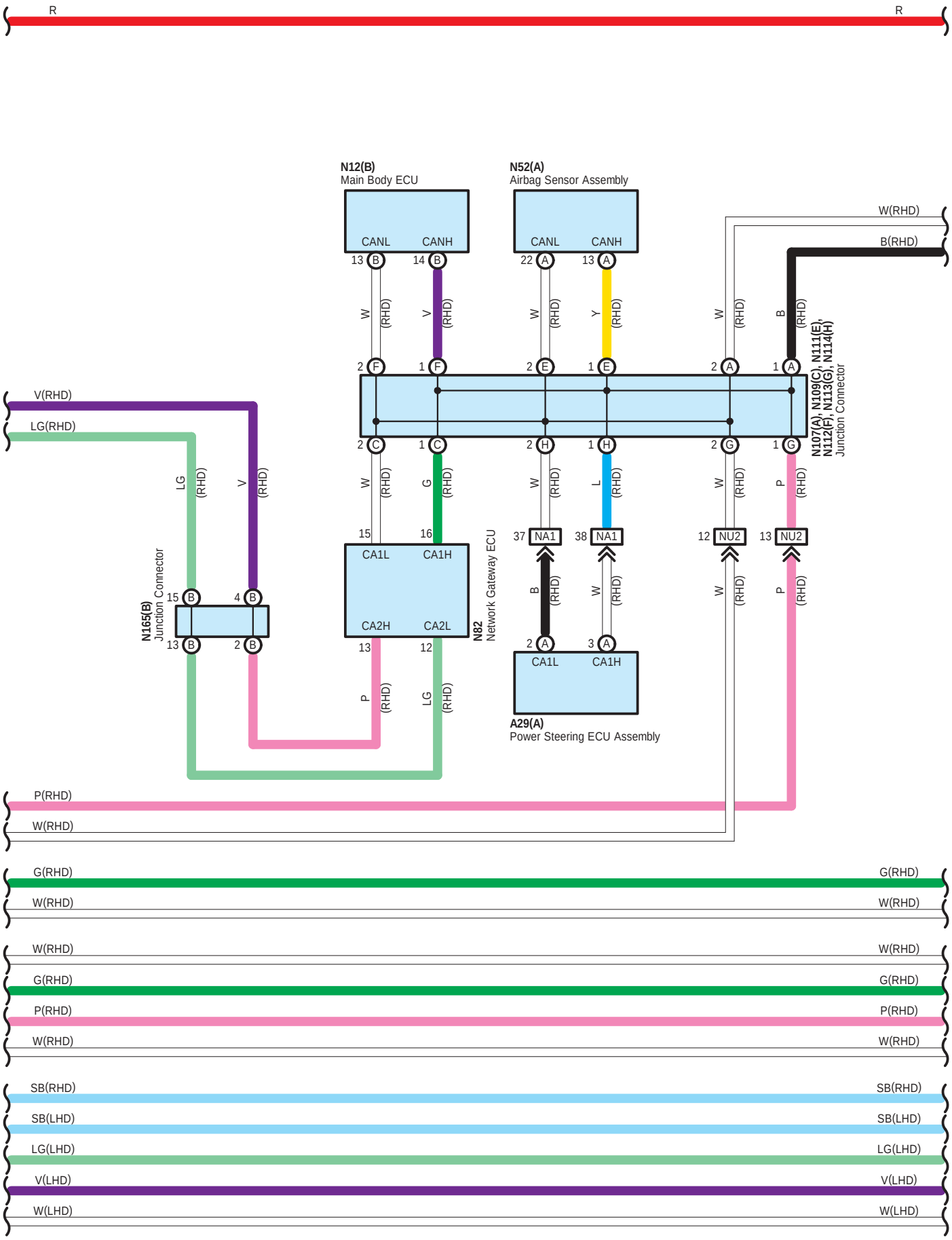
R
R
N12(B)
Main Body ECU
CANL
CANH
13 B
14 B
N52(A)
Airbag Sensor Assembly
CANL
CANH
22 A
13 A
W(RHD)
B(RHD)
W (RHD)
V (RHD)
W (RHD)
Y (RHD)
W (RHD)
B (RHD)
2 F
1 F
2 E
1 E
2 A
1 A
N107(A), N109(C), N111(E),
N112(F), N113(G), N114(H)
Junction Connector
V(RHD)
LG(RHD)
2 C
1 C
2 H
1 H
2 G
1 G
LG (RHD)
V (RHD)
W (RHD)
G (RHD)
W (RHD)
L (RHD)
W (RHD)
P (RHD)
15
16
37 NA1
38 NA1
12 NU2
13 NU2
CA1L
CA1H
N82
Network Gateway ECU
N165(B)
Junction Connector
15 B
4 B
13 B
2 B
CA2H
CA2L
13
12
B (RHD)
W (RHD)
W (RHD)
P (RHD)
2 A
3 A
CA1L
CA1H
A29(A)
Power Steering ECU Assembly
P (RHD)
LG (RHD)
P(RHD)
W(RHD)
G(RHD)
W(RHD)
G(RHD)
W(RHD)
W(RHD)
G(RHD)
P(RHD)
W(RHD)
W(RHD)
G(RHD)
P(RHD)
W(RHD)
SB(RHD)
SB(LHD)
LG(LHD)
V(LHD)
W(LHD)
SB(RHD)
SB(LHD)
LG(LHD)
V(LHD)
W(LHD)

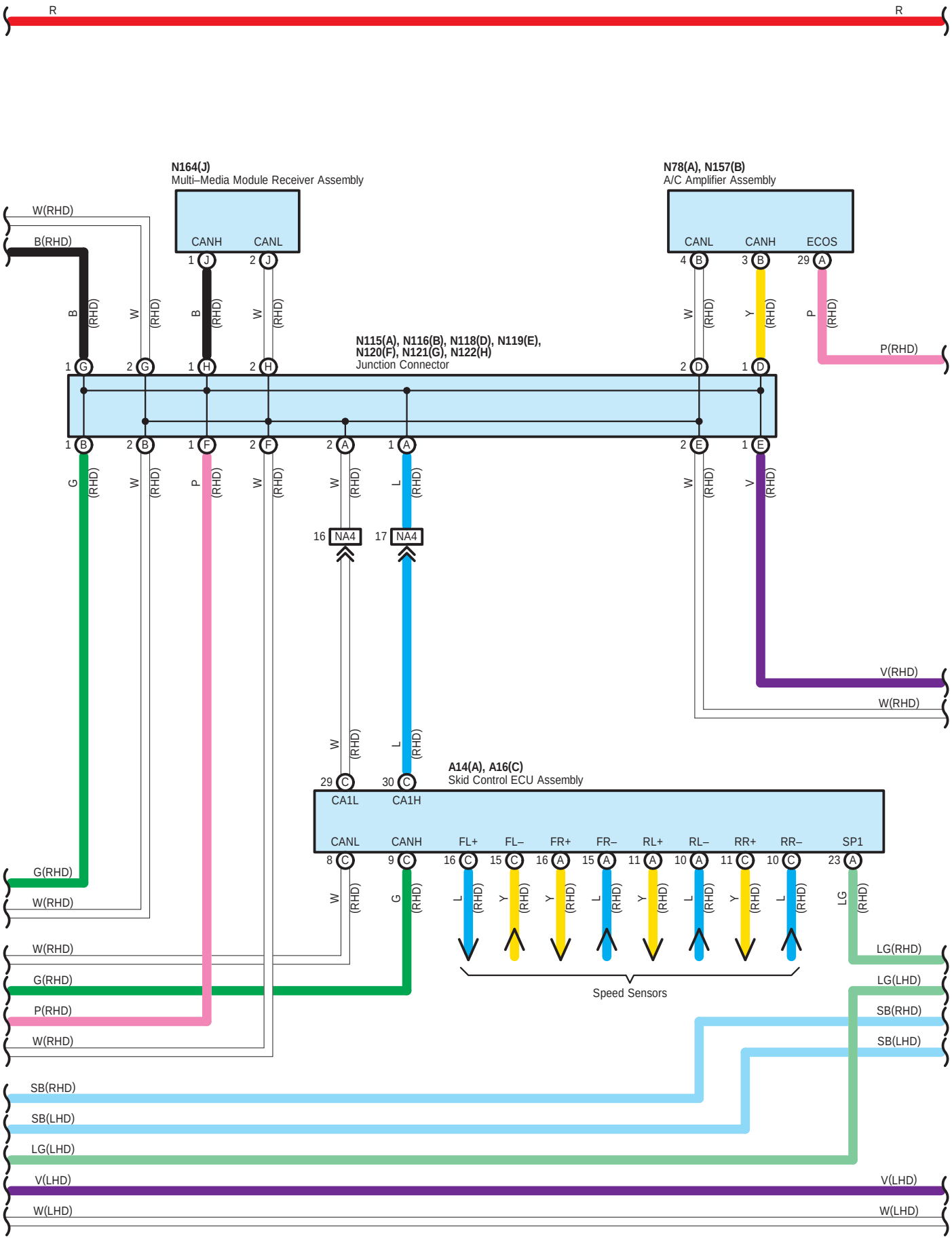
R
R
N164(J)
Multi–Media Module Receiver Assembly
CANH
CANL
N78(A), N157(B)
A/C Amplifier Assembly
CANL
CANH
ECOS
W(RHD)
B(RHD)
P(RHD)
N115(A), N116(B), N118(D), N119(E),
N120(F), N121(G), N122(H)
Junction Connector
NA4
NA4
V(RHD)
W(RHD)
A14(A), A16(C)
Skid Control ECU Assembly
CA1L
CA1H
CANL
CANH
FL+
FL–
FR+
FR–
RL+
RL–
RR+
RR–
SP1
G(RHD)
W(RHD)
W(RHD)
G(RHD)
P(RHD)
W(RHD)
Speed Sensors
LG(RHD)
LG(LHD)
SB(RHD)
SB(LHD)
SB(RHD)
SB(LHD)
LG(LHD)
V(LHD)
W(LHD)
V(LHD)
W(LHD)

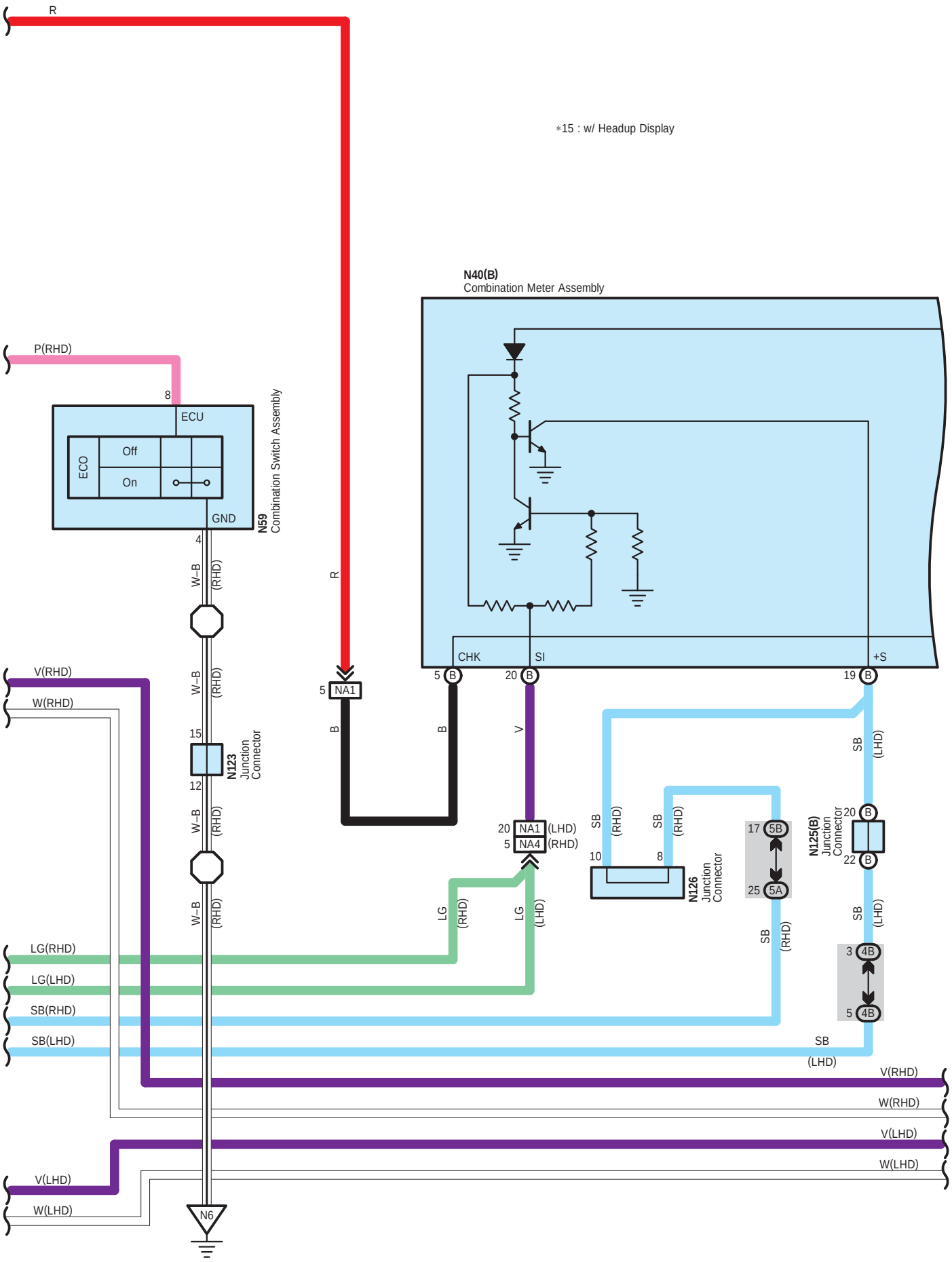
R
*15 : w/ Headup Display
N40(B)
Combination Meter Assembly
P(RHD)
8
ECU
ECO
Off
On
GND
N59
Combination Switch Assembly
4
W–B
(RHD)
R
CHK
SI
+S
5
B
20
B
19
B
V(RHD)
W(RHD)
5
NA1
B
B
V
SB
(LHD)
15
N123
Junction
Connector
12
20
NA1
(LHD)
5
NA4
(RHD)
SB
(RHD)
SB
(RHD)
10
8
N126
Junction
Connector
17
5B
25
5A
N125(B)
Junction
Connector
20
B
22
B
LG
(RHD)
LG
(LHD)
SB
(RHD)
SB
(LHD)
3
4B
5
4B
LG(RHD)
LG(LHD)
SB(RHD)
SB(LHD)
SB
(LHD)
V(RHD)
W(RHD)
V(LHD)
W(LHD)
V(LHD)
W(LHD)
N6

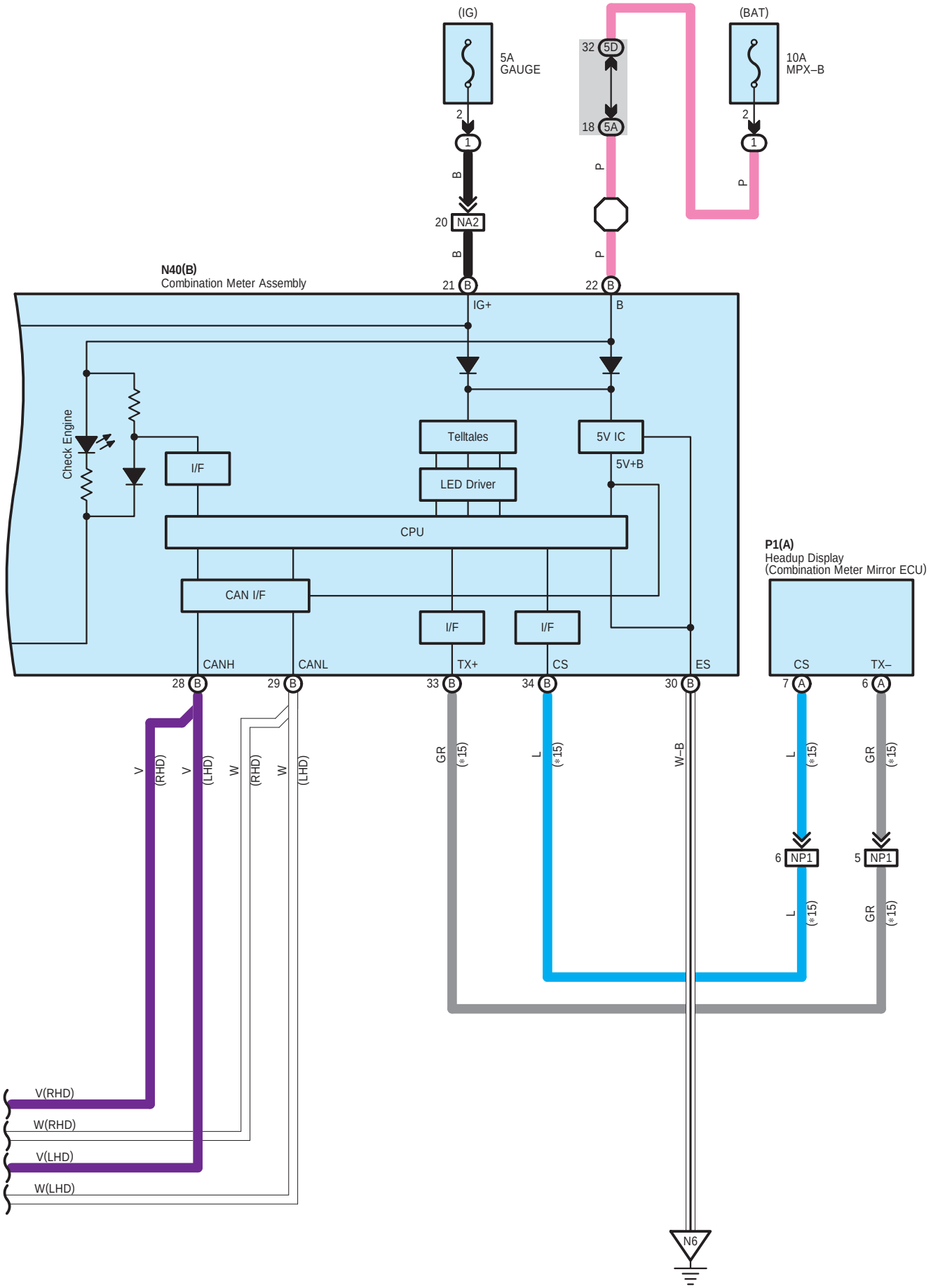
(IG)
5A
GAUGE
(BAT)
10A
MPX–B
32 5D
18 5A
2
1
B
P
20 NA2
N40(B)
Combination Meter Assembly
21 B
22 B
IG+
B
Check Engine
I/F
Telltales
LED Driver
5V IC
5V+B
CPU
CAN I/F
I/F
I/F
CANH
CANL
TX+
CS
ES
28 B
29 B
33 B
34 B
30 B
P1(A)
Headup Display
(Combination Meter Mirror ECU)
CS
TX–
7 A
6 A
V (RHD)
V (LHD)
W (RHD)
W (LHD)
GR (*15)
L (*15)
W–B
6 NP1
5 NP1
V(RHD)
W(RHD)
V(LHD)
W(LHD)
N6

A 2
Black

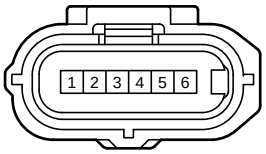

A 5
White

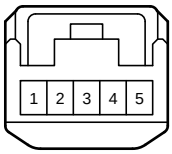

A 14
Black

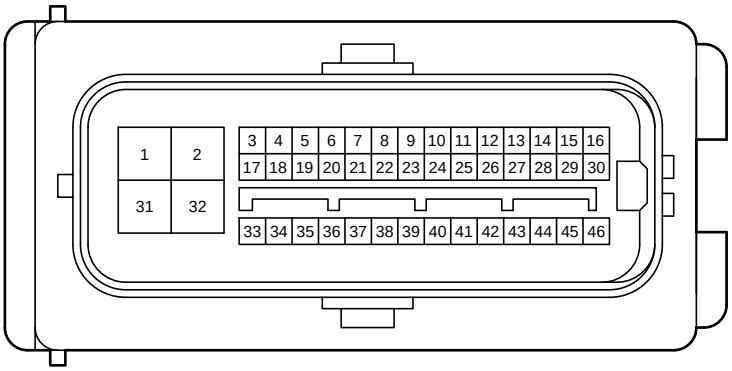

A 16
Gray

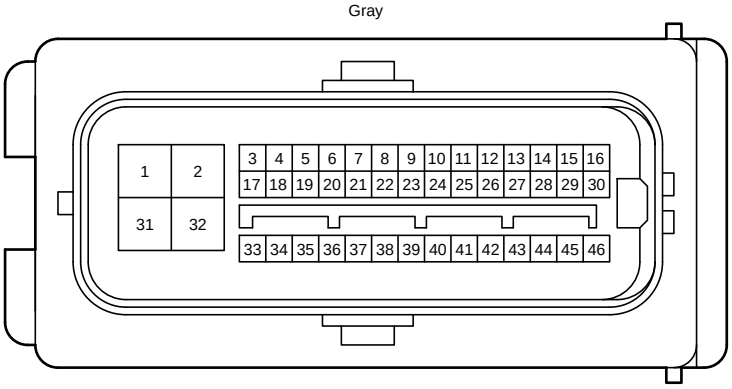

A 29
Black

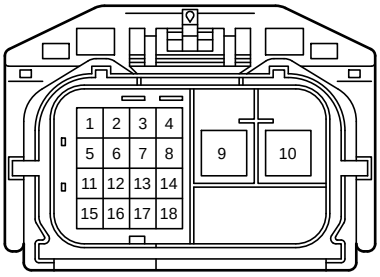

A 35
Gray

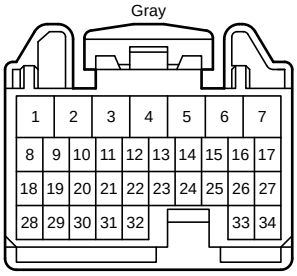

A 36
Gray

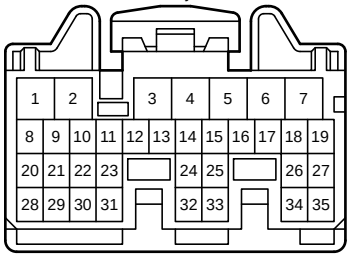

A 50
Gray

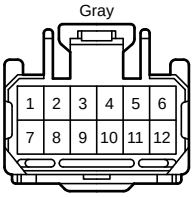

A 51
Blue

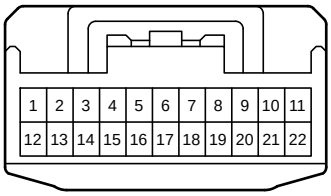

A 53
White

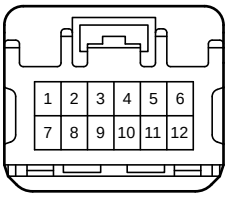

A 57
Blue

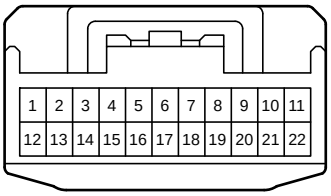

A 79
Black

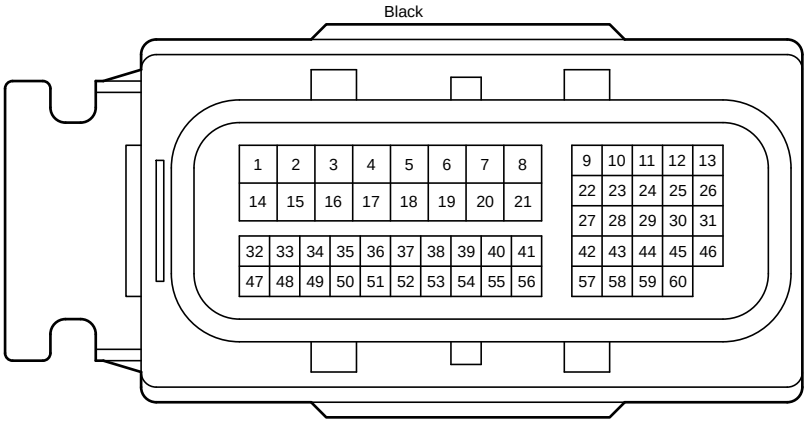

B 4
Black

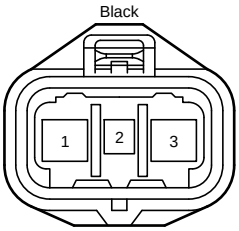

F 24
Black

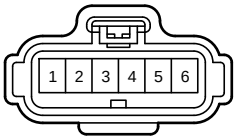

F 32
Gray

F 33
Black

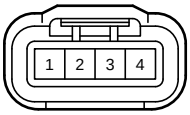

F 39
Black

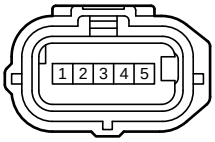

F 45
Black

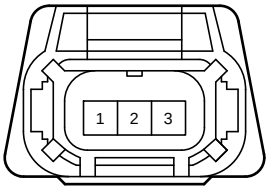

F 59
Gray

F 65
Gray

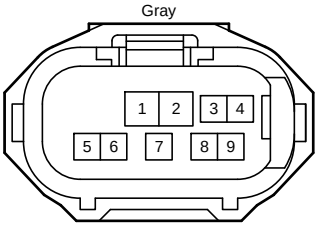

F 66
Gray

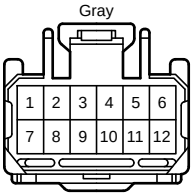

F 70
Black

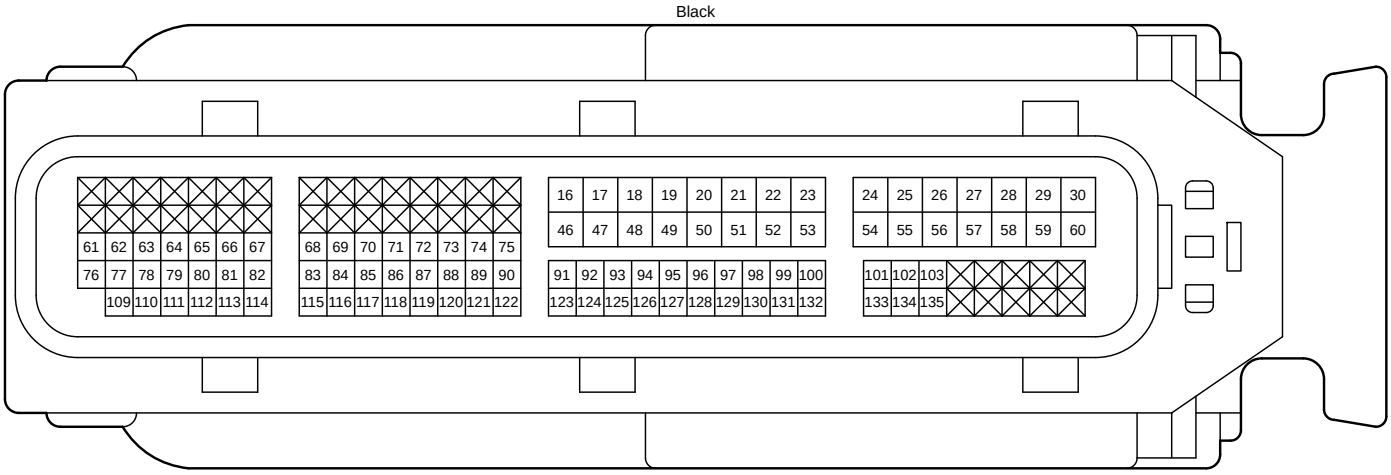

F 71
Gray

F 72
Gray

F 73
Black

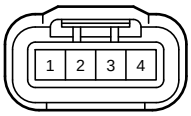

F 74
Black

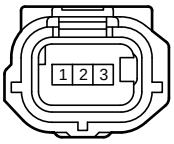

F 75
Gray

F 76
Black

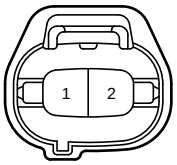

F 77
Black

F 78
Black

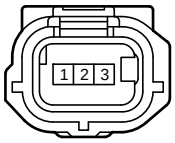

F 79
Black

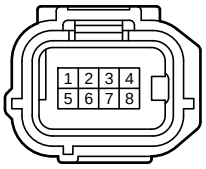

F 80
Black

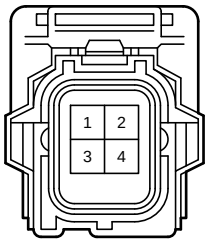

F 81
White

F 82
Black

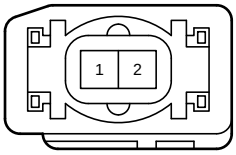

F 83
White

F 84
Black

F 85
Black

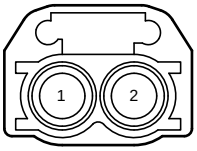

J 3
Black

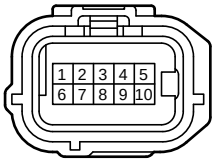

J 4
Black

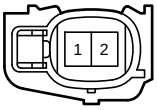

J 5
Black

J 6
Black

J 7
Black

J 8
Black

K 5
Black

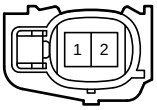

K 6
Black

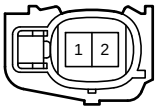

K 7
Black

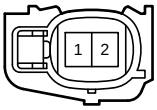

K 8
Black

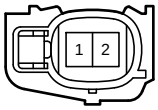

N 12
White

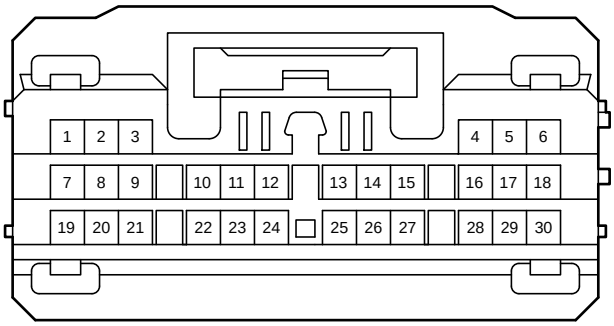

N 20
Black

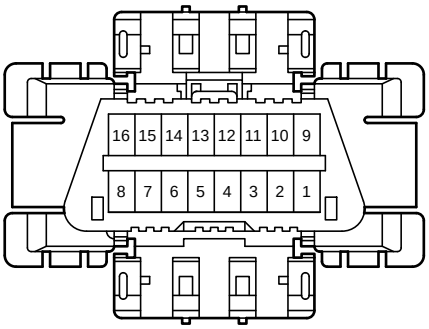

N 40
Black

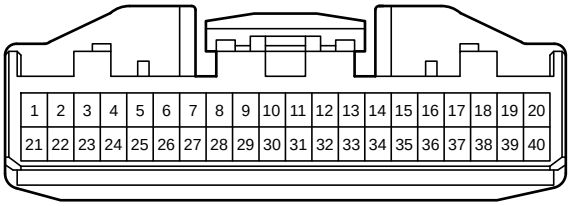

N 43
Black

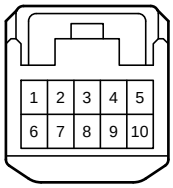

N 52
Yellow

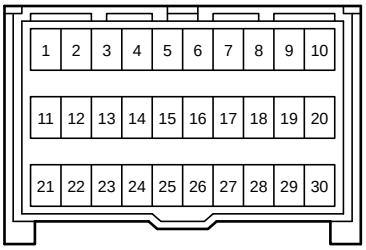

N 59
Black

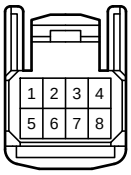

N 78
White

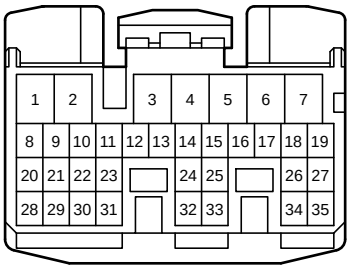

N 82
White

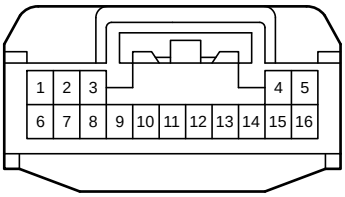

N 91
Gray

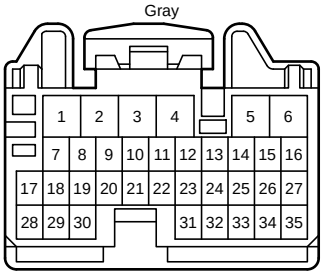

N 92
Gray

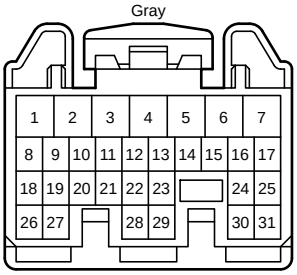

N 94
White

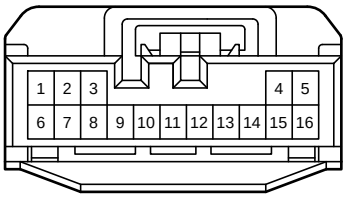

N107
White

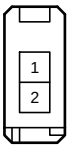

N109
White

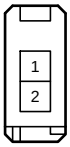

N111
White

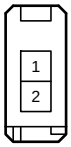

N112
White

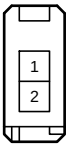

N113
White

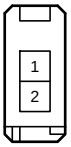

N114
White

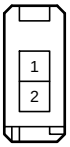

N115
White

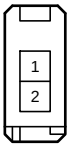

N116
White

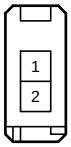

N117
White

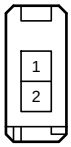

N118
White

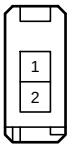

N119
White

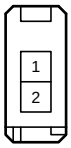

N120
White

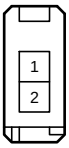

N121
White

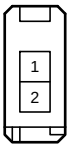

N122
White

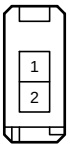

N123
Blue

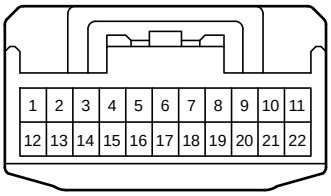

N125
Blue

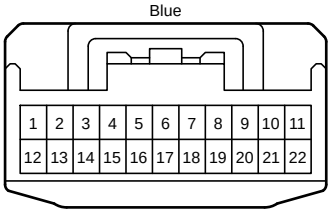

N126
Blue

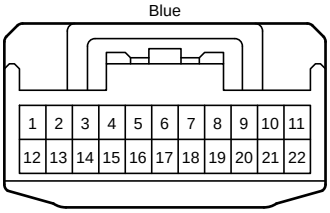

N130
Black

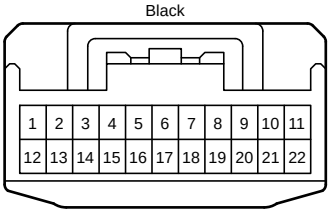

N134
Black

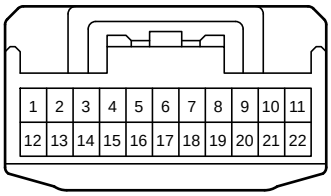

N157
White

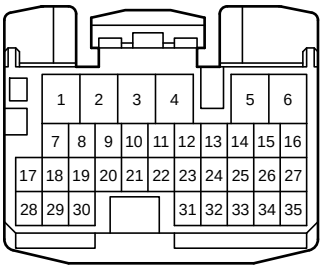

N164
White

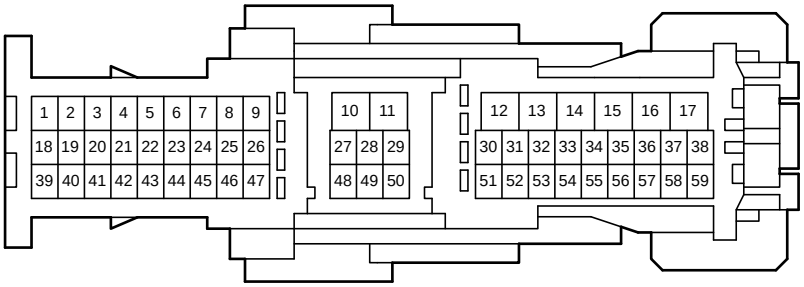

N165
Black

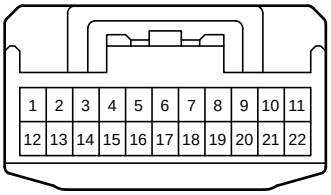

P 1
White

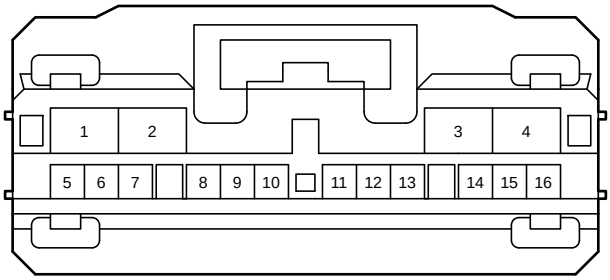

U 11
White

U 38
Black

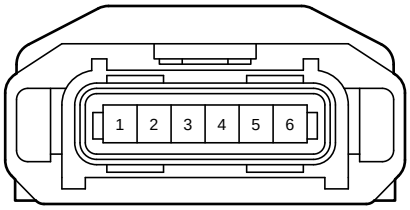

U 49
White

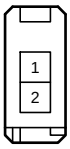

U 50
White

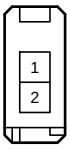

U 51
White

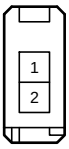

1D
White

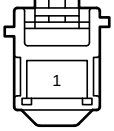

1E
White

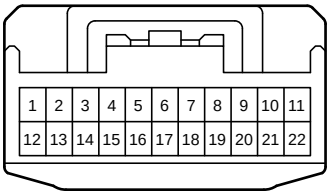

1F
White

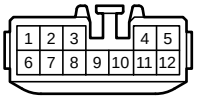

4A
White

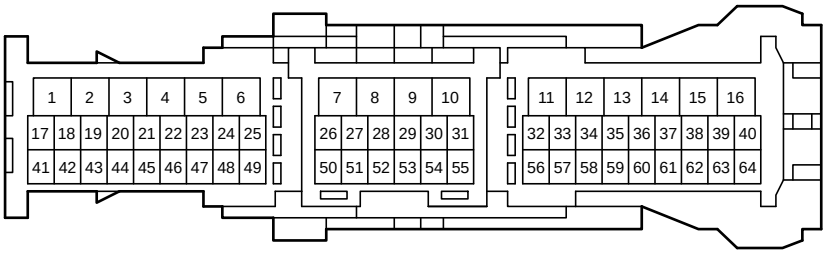

4B
White

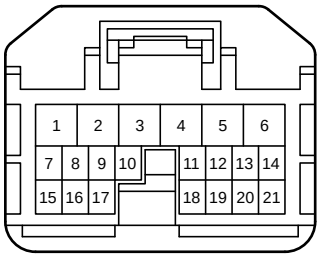

4D
White

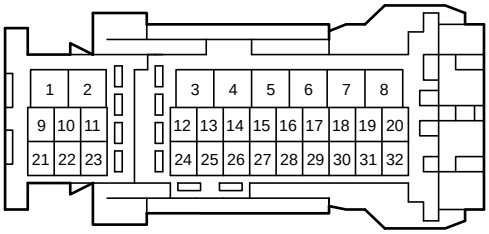

5A
White

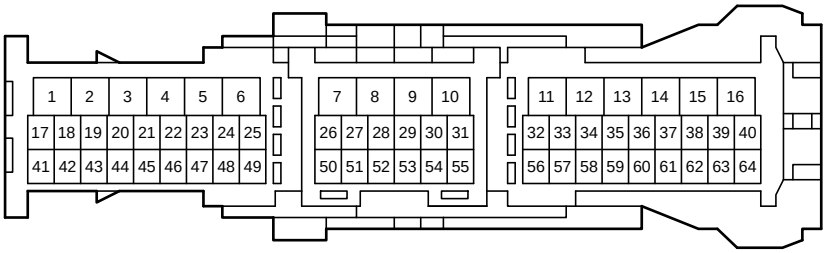

5B
White

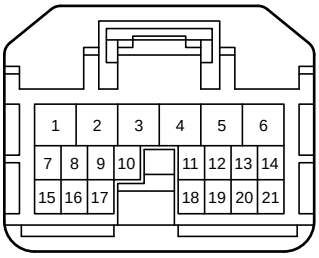

5D
White

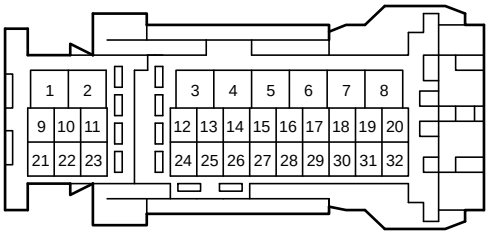

AF1
White

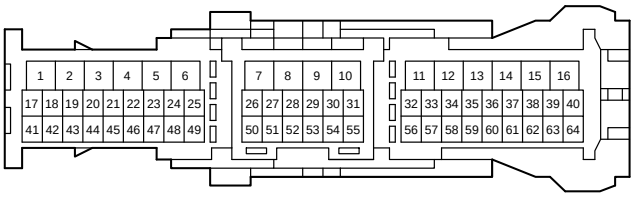

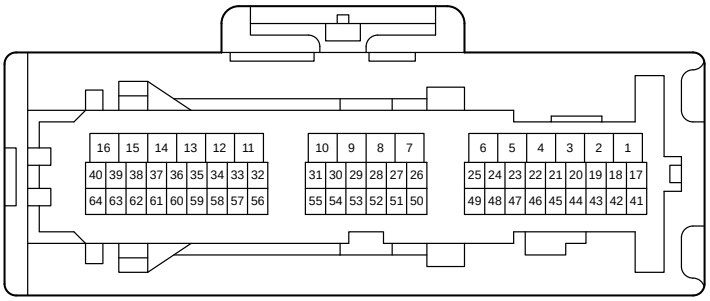

AU1
White

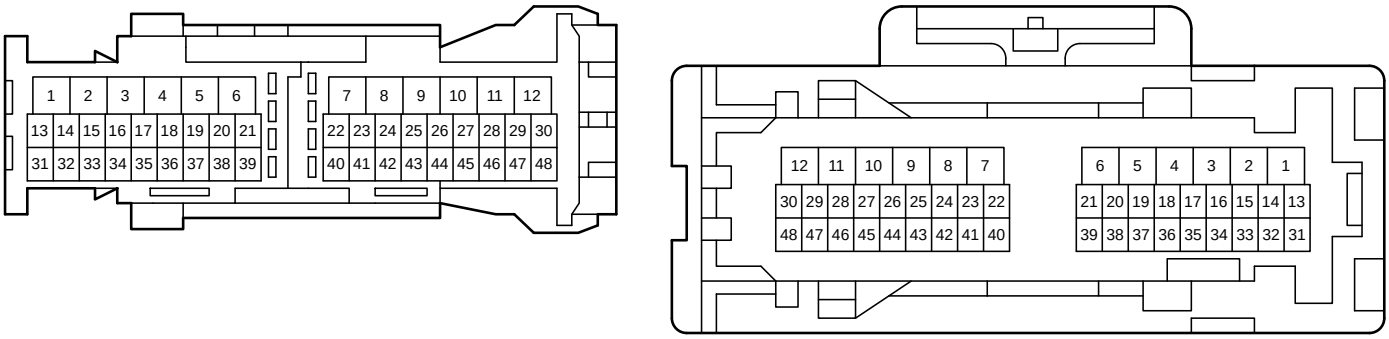

BA2
White

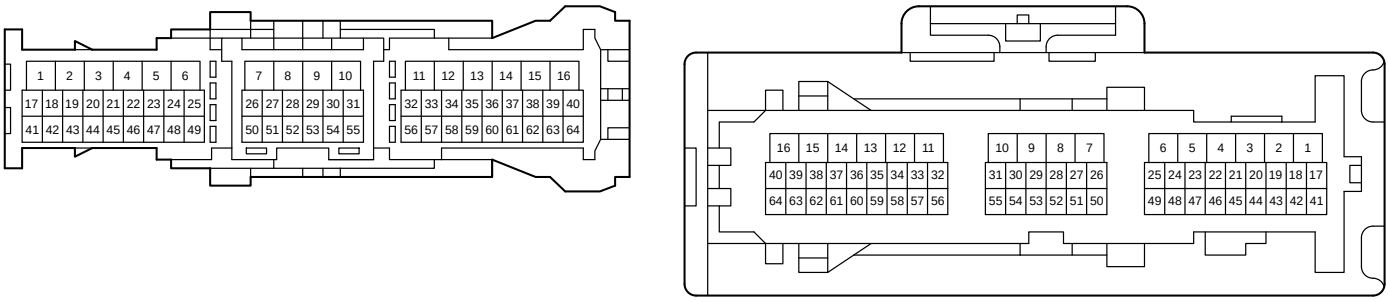

FK1
Black

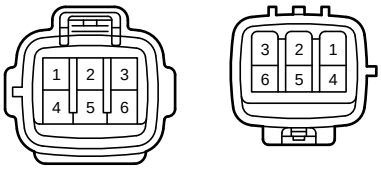

JF1
Gray

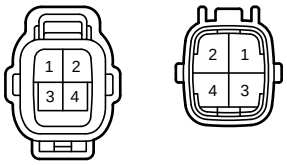

NA1
White

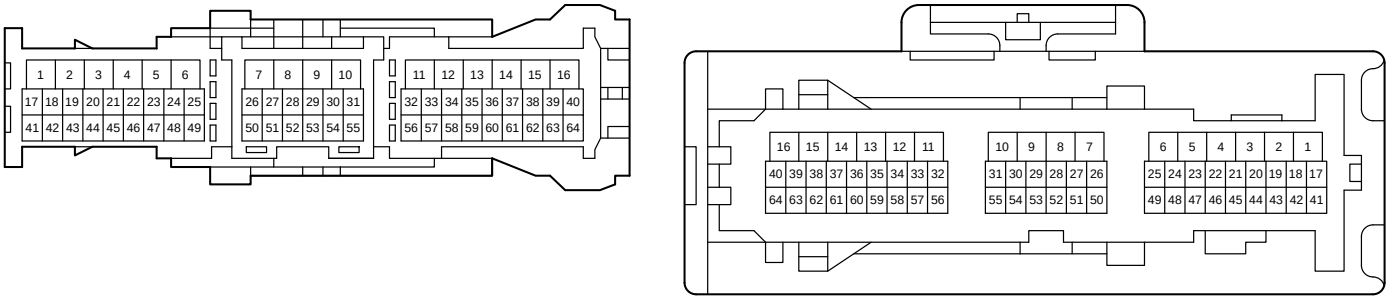

NA2
White

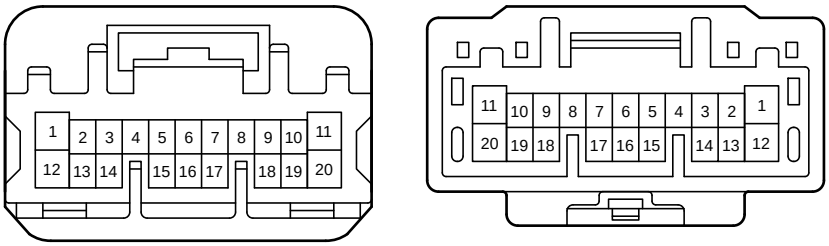

NA3
White

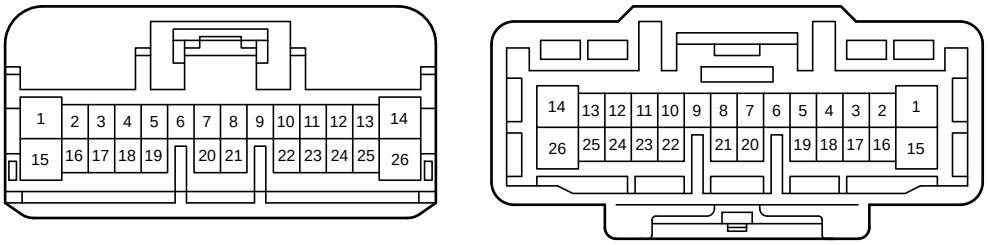

NA4
Gray

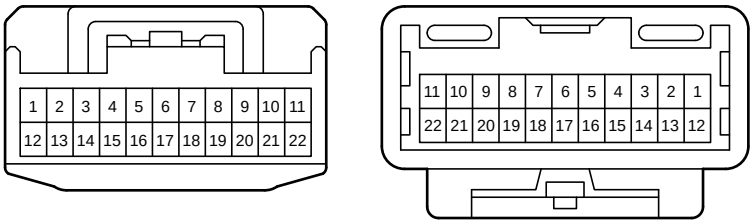

NP1
White

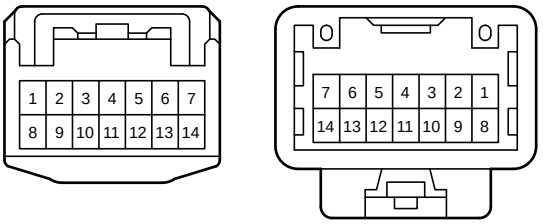

NU1
White

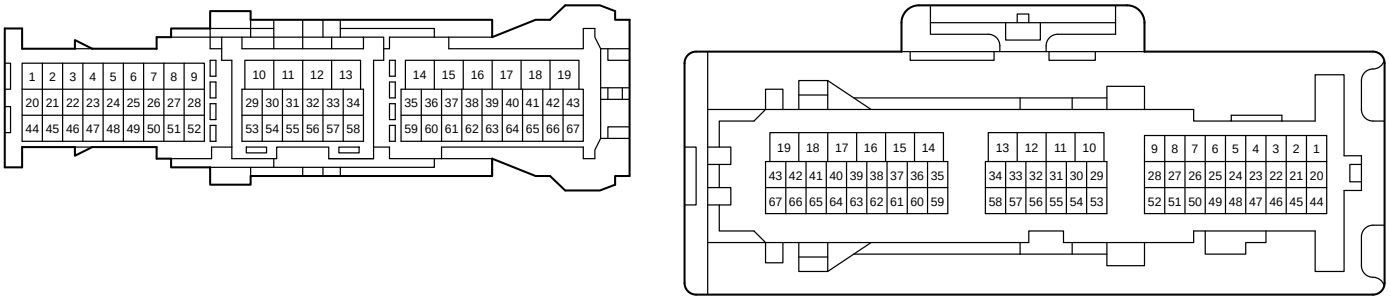

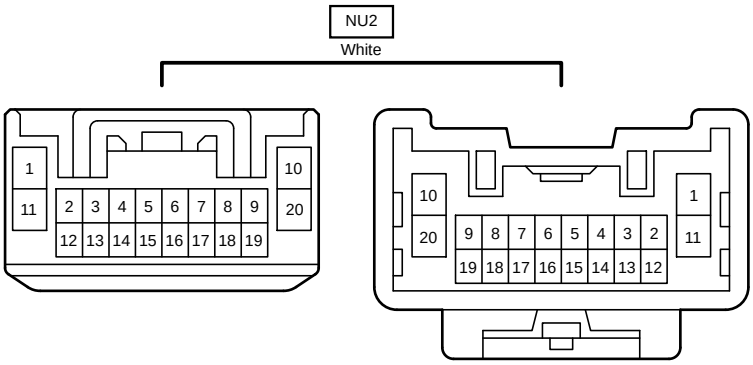
NU2
White
1
10
11
20
2 3 4 5 6 7 8 9
12 13 14 15 16 17 18 19
10
1
20
11
9 8 7 6 5 4 3 2
19 18 17 16 15 14 13 12