1 GS 450h / GS 300h

(Cont. next page)

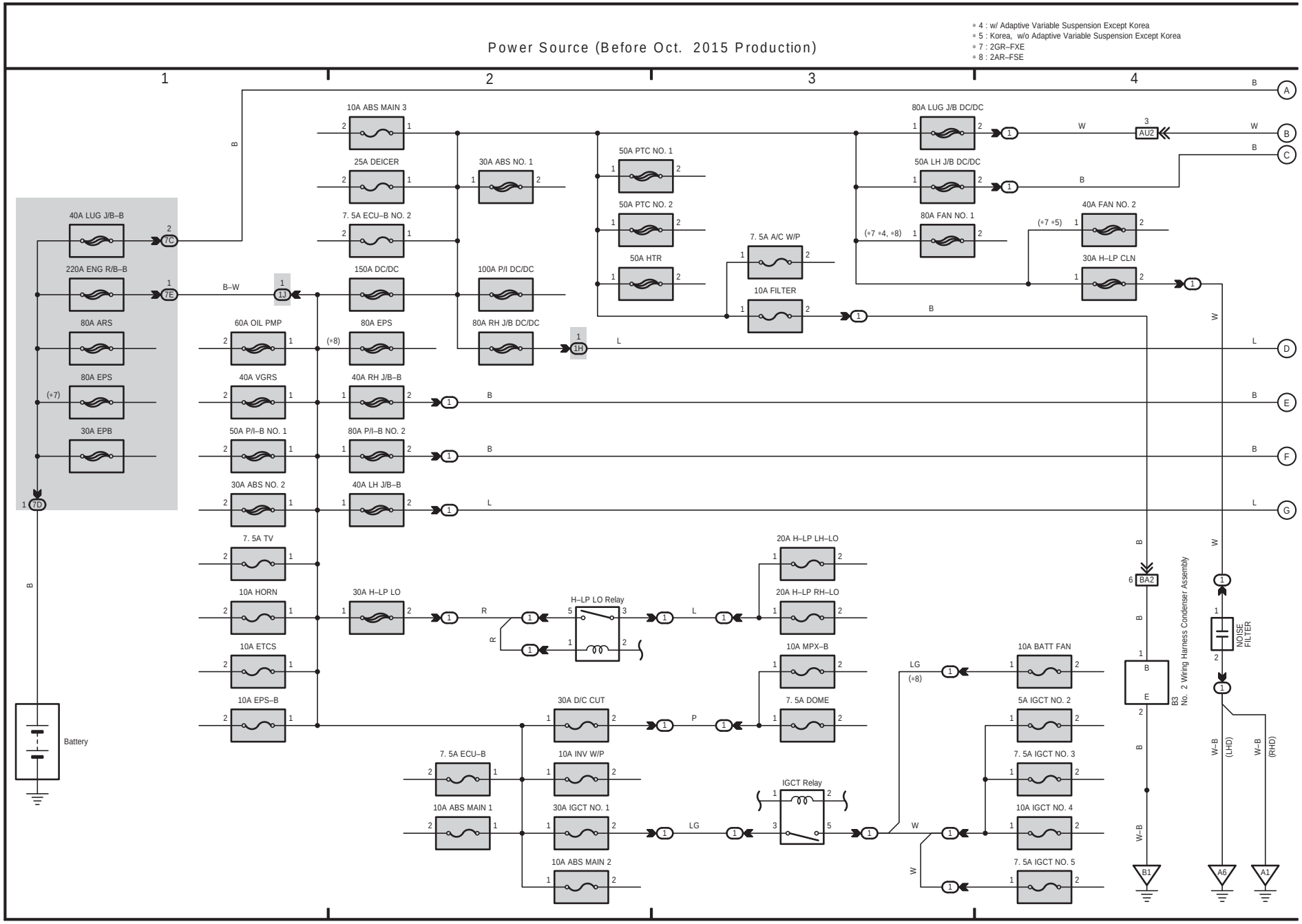

(Cont. next page)

Power Source (Before Oct. 2015 Production)

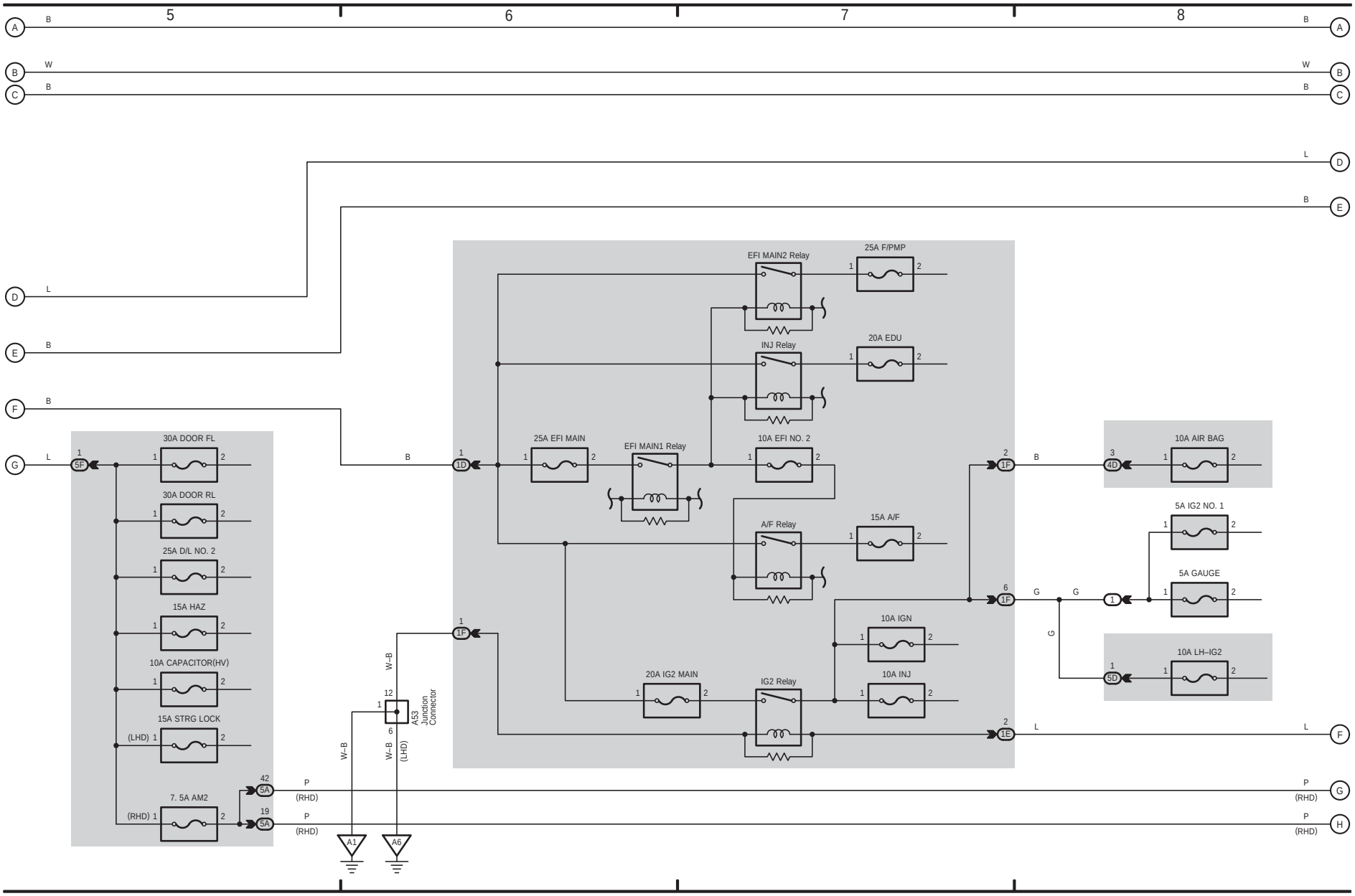

1 GS 450h / GS 300h (Cont' d)

(Cont. next page)

Power Source (Before Oct. 2015 Production)

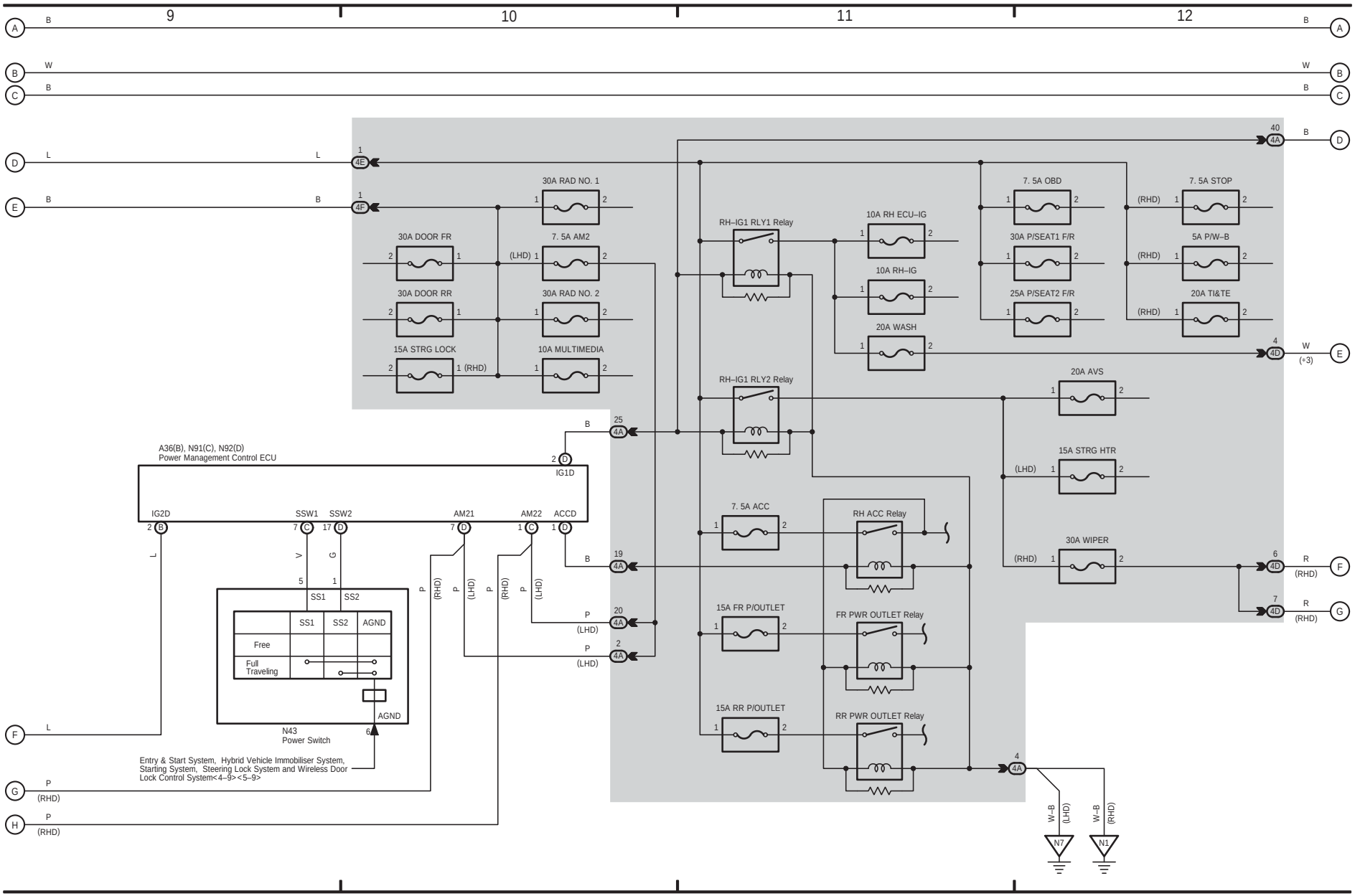

(Cont. next page)

Power Source (Before Oct. 2015 Production)

* 2 : w/ Dynamic Radar Cruise Control
* 3 : w/ Lane Keeping Assist

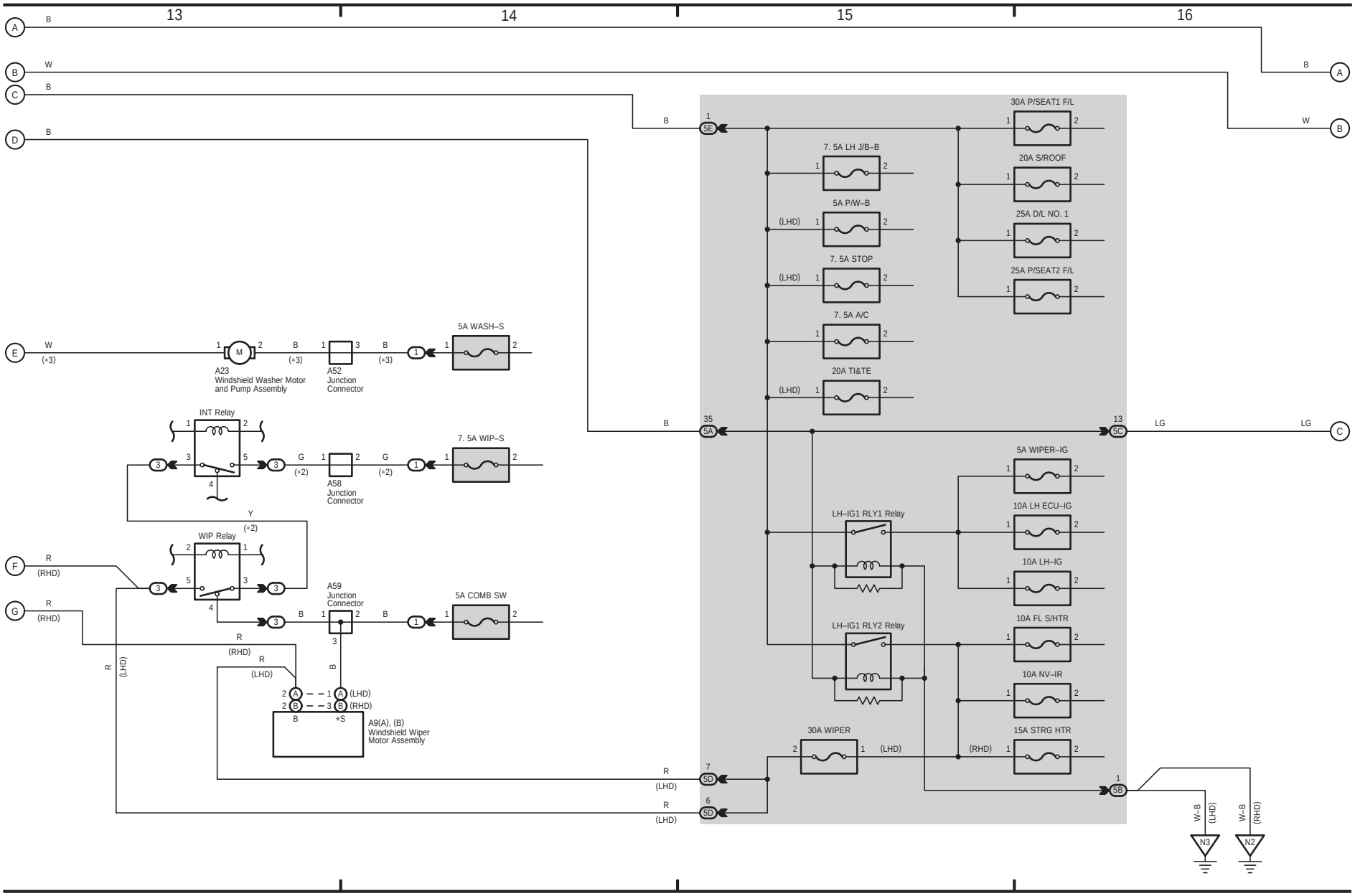

1 GS 450h / GS 300h (Cont' d)
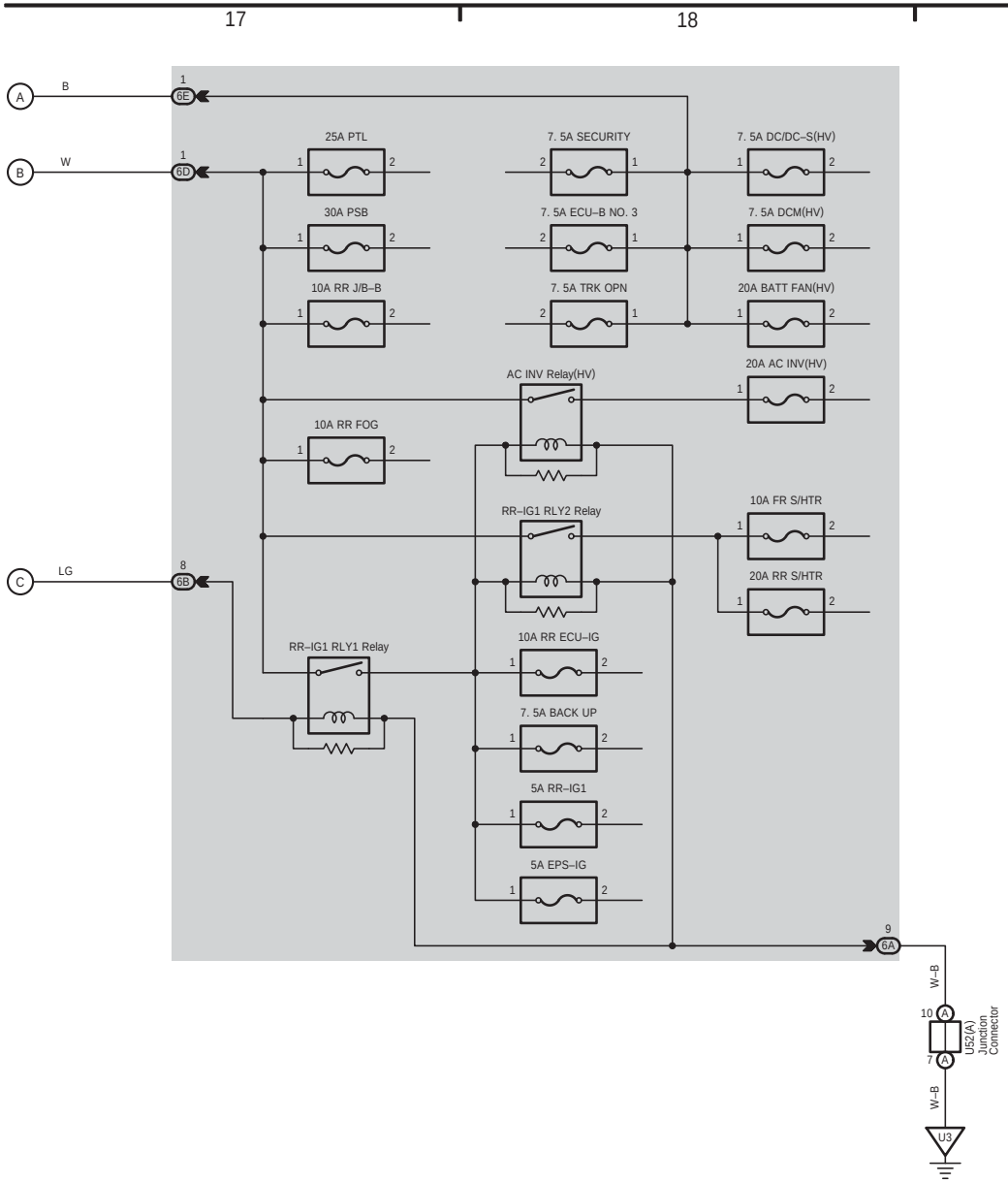
Power Source (Before Oct. 2015 Production)