BODY DIMENSION DRAWINGS

ENGINE COMPARTMENT

(Three-Dimensional Distance)

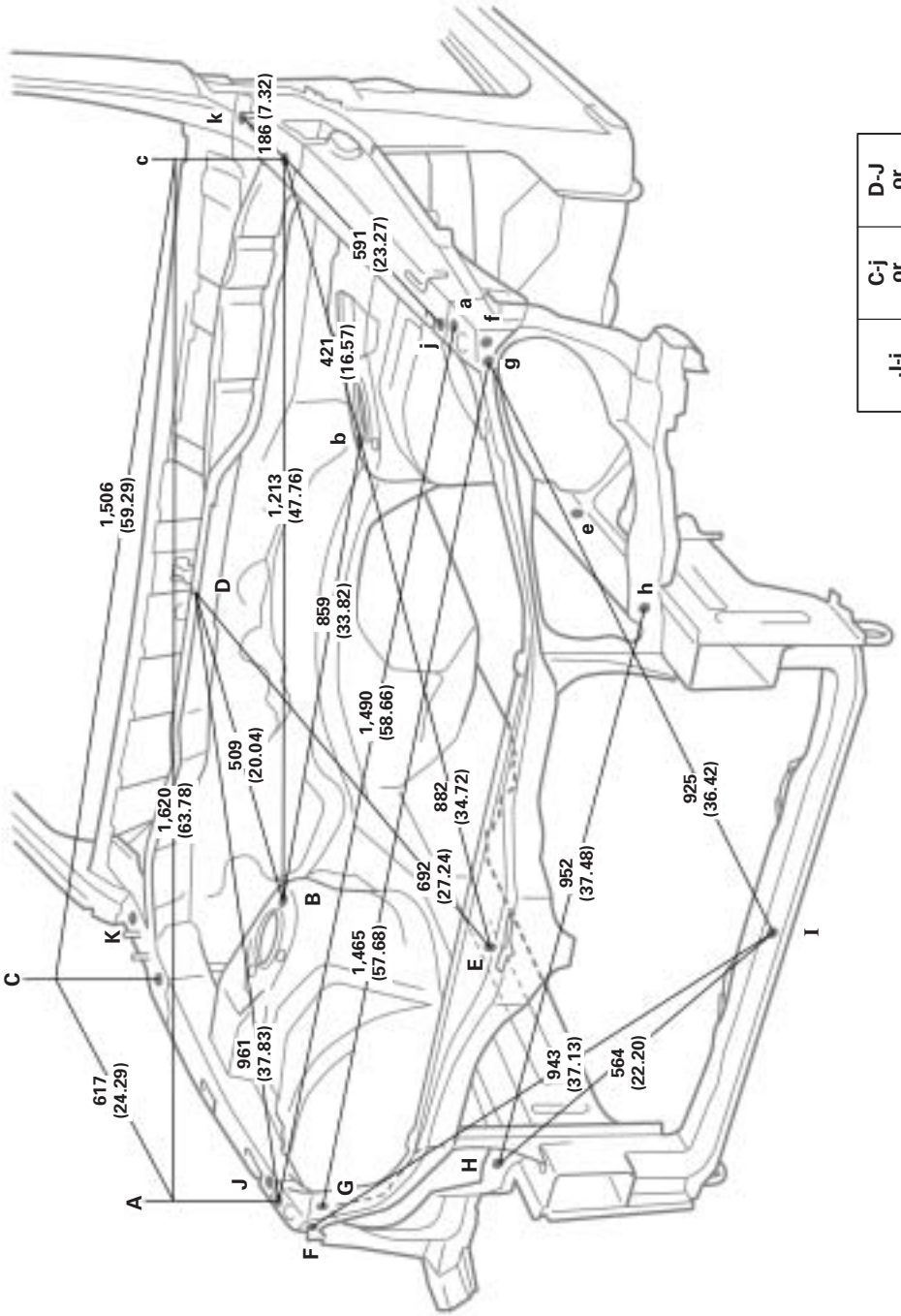

J-j	C-j or c-J	D-J or D-j
1,473 (57.99)	1,602 (63.07)	938 (36.93)

mm (in.)

HINT: For symbols, capital letters indicate right side of vehicle, small letters indicate left side of vehicle (Seen from rear).

Symbol	Name	Hole dia.	Symbol	Name	Hole dia.
A, a	Radiator upper support standard hole	10 (0.39)	G, g	Radiator support standard hole	10 (0.39)
B, b	Front spring support hole-inner	13 (0.51)	H, h	Radiator support standard hole	10 (0.39)
C, c	Cowl top side panel standard hole	10 (0.39)	I	Hood lock support installation nut	6 (0.24) nut
D	Cowl top panel vehicle center mark	1 (0.04) R	J, j	Front fender apron standard hole	10 (0.39)
E, e	Front side member standard hole	13 (0.51)	K, k	Cowl top side panel standard hole	10 (0.39)
F, f	Front fender installation nut	6 (0.24) nut	—	—	—

BODY OPENING AREAS (Side View: Front)

(Three-Dimensional Distance)

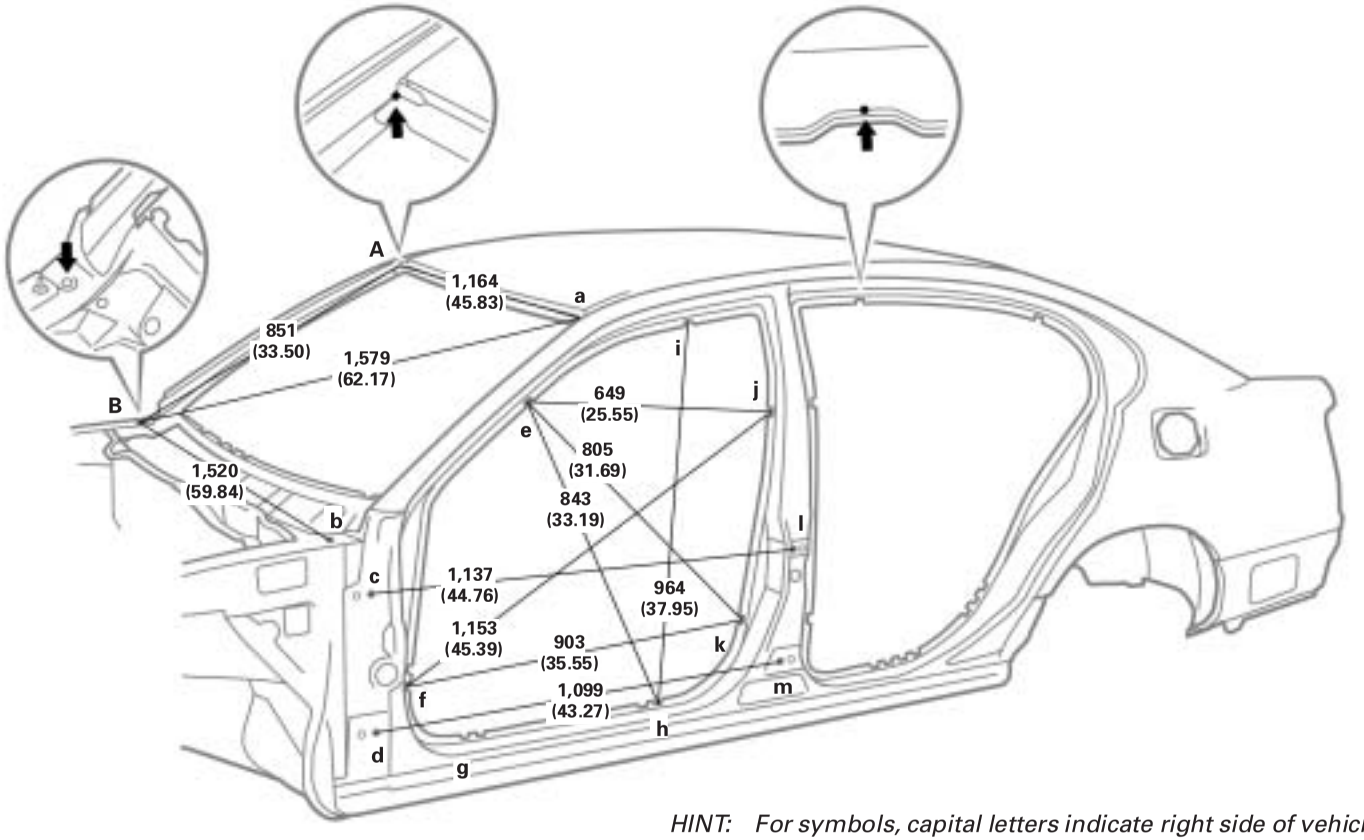

HINT: For symbols, capital letters indicate right side of vehicle, small letters indicate left side of vehicle (Seen from rear).

Vehicle Dimensions Left ↔ Right

E-e	F-f	G-g	H-h	I-i	J-j	K-k
1,344 (52.91)	1,502 (59.13)	1,512 (59.53)	1,522 (59.92)	1,164 (45.83)	1,442 (56.77)	1,516 (59.69)

E-f or e-F	E-h or e-H	E-j or e-J	F-j or f-J	F-k or f-K	H-i or h-I	J-k or j-K
1,600 (62.99)	1,660 (65.35)	1,536 (60.47)	1,869 (73.58)	1,759 (69.25)	1,643 (64.69)	1,571 (61.85)

mm (in.)

Symbol	Name	Hole dia.	Symbol	Name	Hole dia.
A, a	Roof panel/Front body pillar adjoining portion	—	H, h	Rocker panel assembly mark	—
B, b	Cowl top side panel standard hole	10 (0.39)	I, i	Roof side rail assembly mark	—
C, c	Front door hinge installation nut	10 (0.39) nut	J, j	Center body pillar assembly mark	—
D, d	Front door hinge installation nut	10 (0.39) nut	K, k	Center body pillar assembly mark	—
E, e	Front body pillar assembly mark	—	L, l	Rear door hinge installation hole	13 (0.51)
F, f	Front body pillar assembly mark	—	M, m	Rear door hinge installation hole	13 (0.51)
G, g	Rocker panel assembly mark	—	—	—	—

BODY OPENING AREAS (Side View: Rear)

(Three-Dimensional Distance)

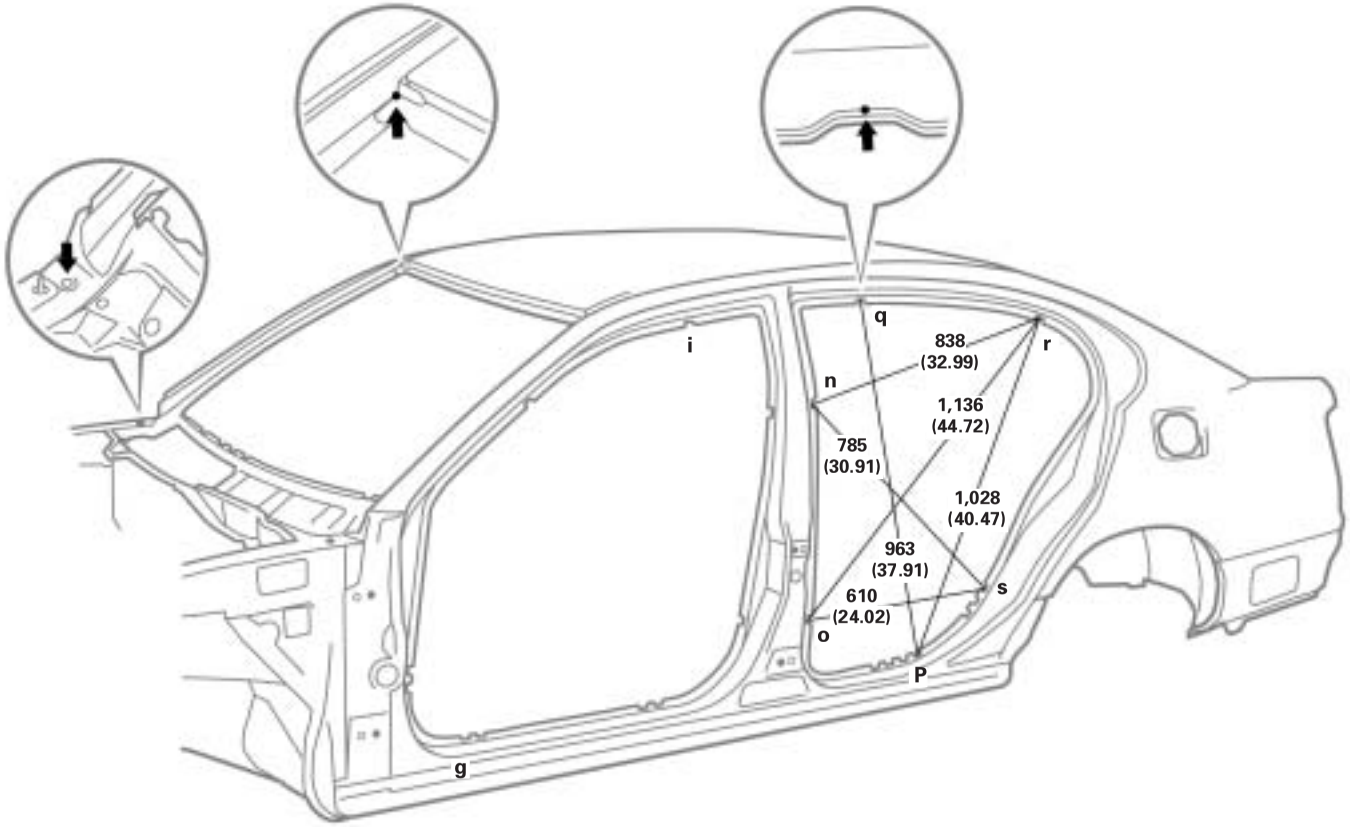

HINT: For symbols, capital letters indicate right side of vehicle, small letters indicate left side of vehicle (Seen from rear).

Vehicle Dimensions Left ↔ Right

N-n	O-o	P-p	Q-q	R-r	S-s
1,432 (56.38)	1,516 (59.69)	1,520 (59.84)	1,136 (44.72)	1,246 (49.06)	1,516 (59.69)

G-p or g-P	I-q or i-Q	N-r or n-R	N-s or n-S	O-s or o-S	P-q or p-Q	R-s or r-S
1,986 (78.19)	1,268 (49.92)	1,577 (62.09)	1,670 (65.75)	1,634 (64.33)	1,629 (64.13)	1,579 (62.17)

mm (in.)

Symbol	Name	Hole dia.	Symbol	Name	Hole dia.
G, g	Rocker panel assembly mark	—	P, p	Rocker panel assembly mark	—
I, i	Roof side rail assembly mark	—	Q, q	Roof side rail assembly mark	—
N, n	Center body pillar assembly mark	—	R, r	Quarter panel assembly mark	—
O, o	Center body pillar assembly mark	—	S, s	Quarter panel assembly mark	—

BODY OPENING AREAS (Rear View)

(Three-Dimensional Distance)

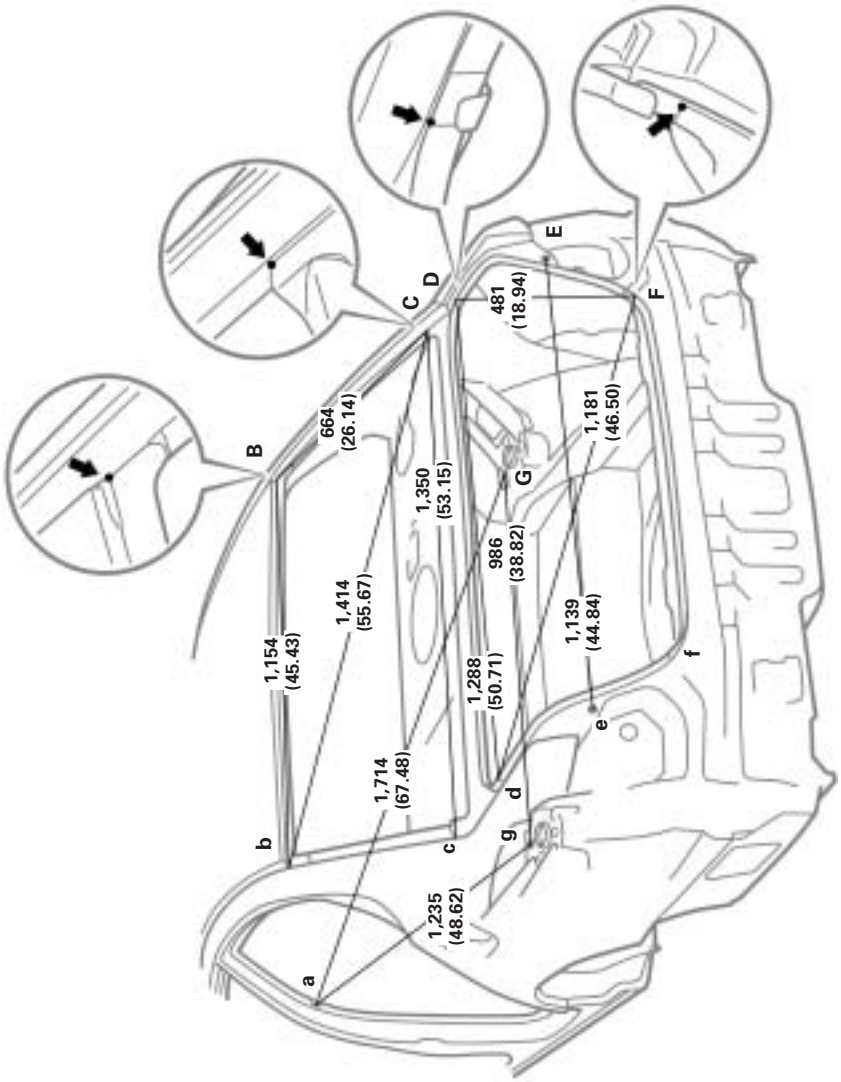

HINT: For symbols, capital letters indicate right side of vehicle, small letters indicate left side of vehicle (Seen from rear).

mm (in.)

Symbol	Name	Hole dia.	Symbol	Name	Hole dia.
A, a	Center body pillar assembly mark	—	E, e	Rear combination light installation nut	6 (0.24) nut
B, b	Roof panel/Quarter panel adjoining portion	—	F, f	Lower back reinforcement/Lower back panel adjoining portion	—
C, c	Upper back panel/Quarter panel adjoining portion	—	G, g	Rear spring support hole inner	11 (0.43)
D, d	Quarter panel/Upper back panel adjoining portion	—	—	—	—

UNDER BODY

(Three-Dimensional Distance)

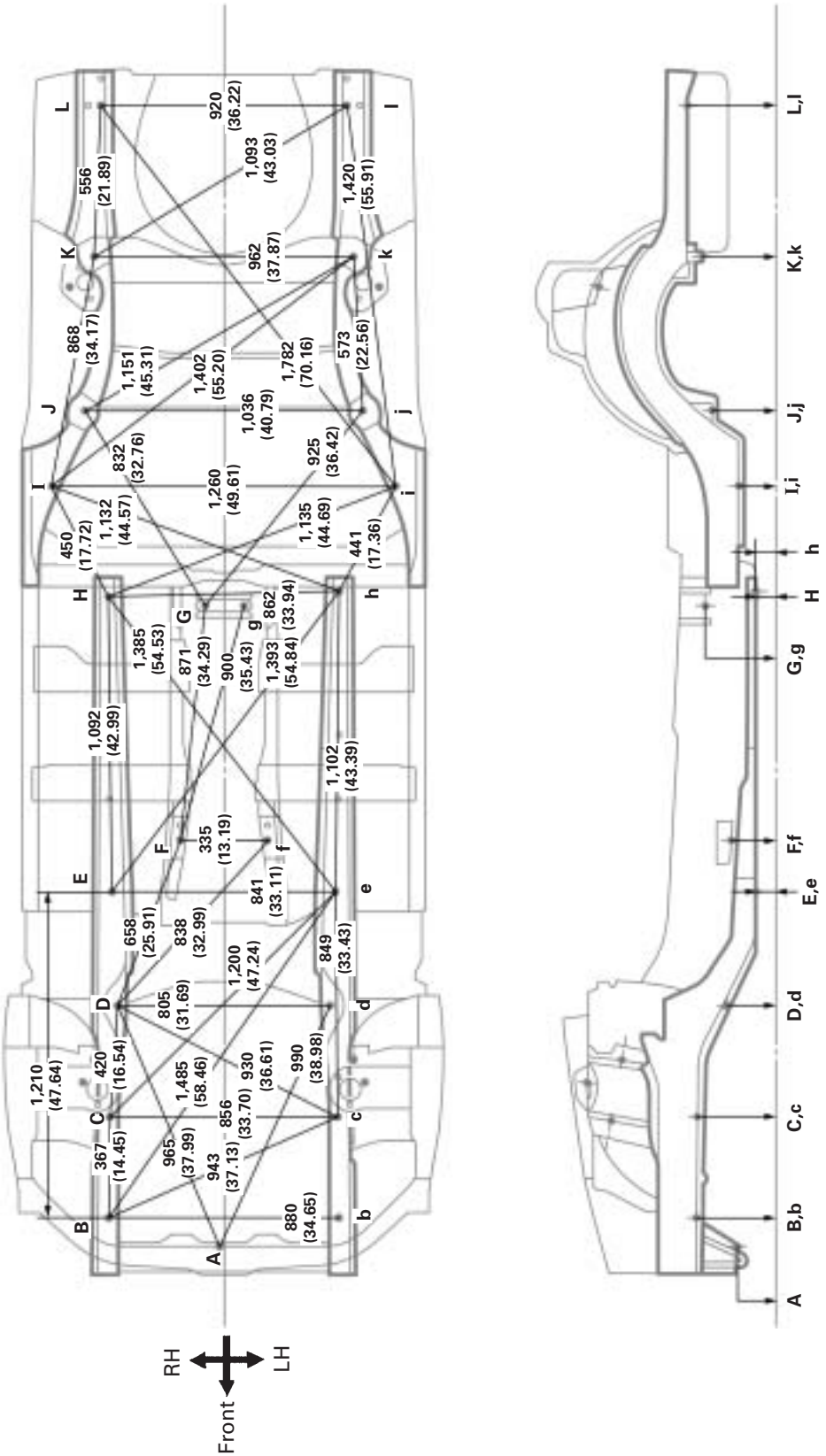

mm (in.)

Symbol	Name	Hole dia.	Symbol	Name	Hole dia.
A	Intercooler tube installation nut	6 (0.24) nut	G, g	Drive shaft center support bearing installation nut	10 (0.39) nut
B, b	Front side member standard hole	25 (0.98)	H, h	Front floor under reinforcement standard hole	18 (0.71)
C, c	Front suspension crossmember installation nut	14 (0.55) nut	I, i	Rear floor side member standard hole	18 (0.71)
D, d	Strut bar installation nut	14 (0.55) nut	J, j	Rear suspension member installation nut	14 (0.55) nut
E, e	Front side member standard hole	25 (0.98)	K, k	Rear suspension member installation nut	14 (0.55) nut
F, f	Engine rear mounting member installation nut-front	10 (0.39) nut	L, l	Transport hook installation nut-front inner	12 (0.47) nut

UNDER BODY (Cont'd)

(Two-Dimensional Distance)

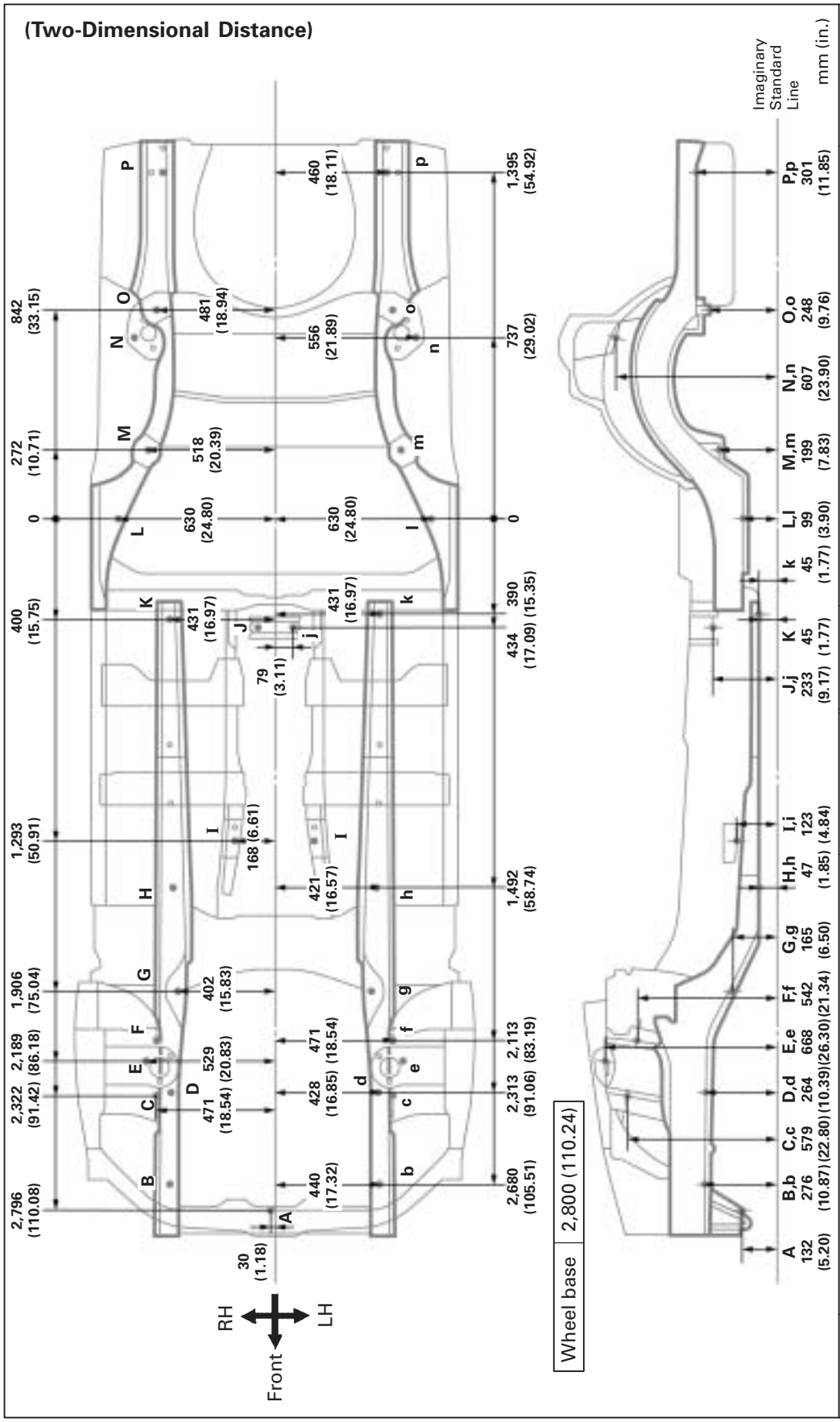

Symbol	Name	Hole dia.	Symbol	Name	Hole dia.
A	Intercooler tube installation nut	6 (0.24) nut	I, i	Engine rear mounting member installation nut-front	10 (0.39) nut
B, b	Front side member standard hole	25 (0.98)	J, j	Drive shaft center support bearing installation nut	10 (0.39) nut
C, c	Front suspension upper arm installation hole-front rear	10.2 (0.402)	K, k	Front floor under reinforcement standard hole	18 (0.71)
D, d	Front suspension crossmember installation nut	14 (0.55) nut	L, l	Rear floor side member standard hole	18 (0.71)
E, e	Front spring support hole outer	13 (0.51)	M, m	Rear suspension member installation nut	14 (0.55) nut
F, f	Front suspension upper arm installation hole-rear front	10.2 (0.402)	N, n	Rear spring support hole-outer	11 (0.43)
G, g	Strut bar installation nut	14 (0.55) nut	O, o	Rear suspension member installation nut	14 (0.55) nut
H, h	Front side member standard hole	25 (0.98)	P, p	Transport hook installation nut-front inner	12 (0.47) nut

FRONT SUSPENSION CROSSMEMBER (LHD)

(Three-Dimensional Distance)

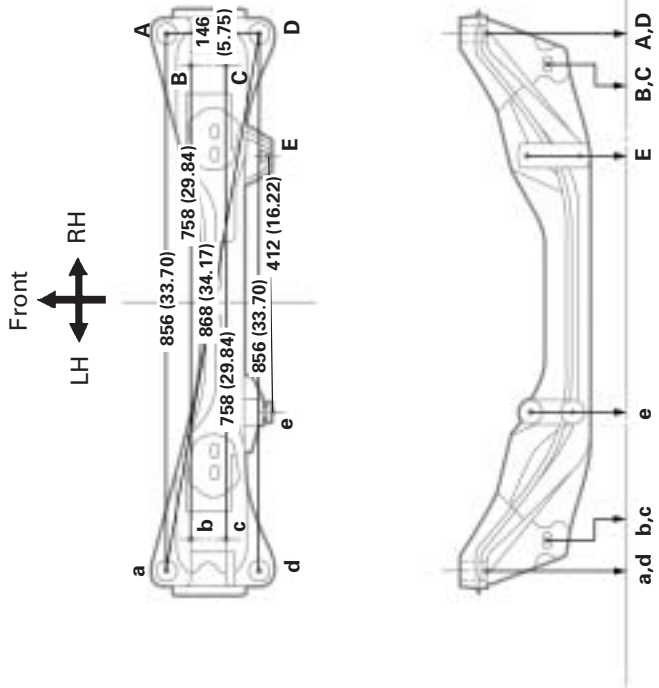

(Two-Dimensional Distance)

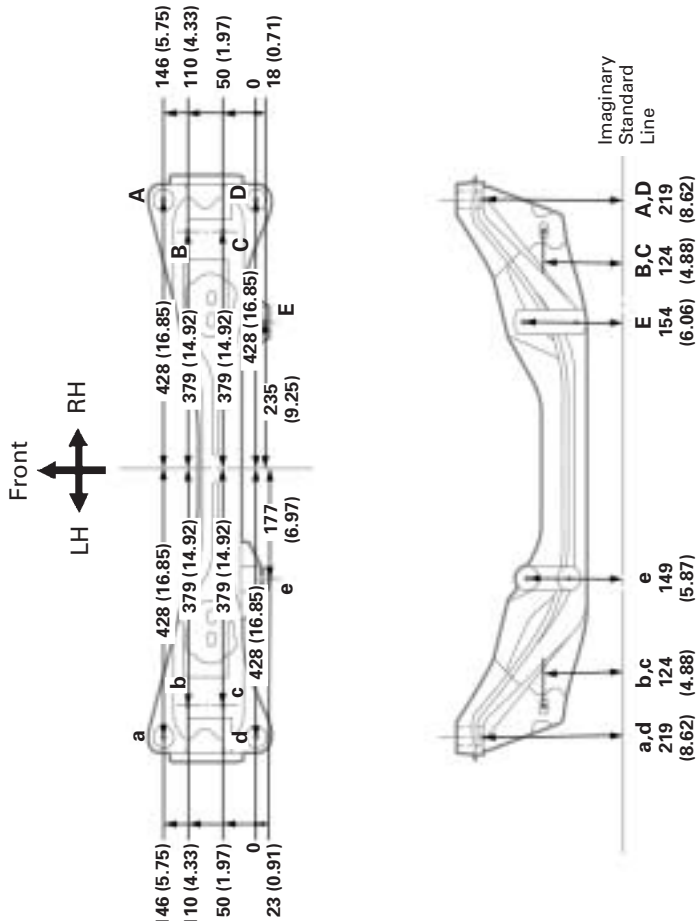

mm (in.)

Symbol	Name	Hole dia.	Symbol	Name	Hole dia.
A, a	Front suspension crossmember installation hole-lower	18 (0.71)	D, d	Front suspension crossmember installation hole-lower	18 (0.71)
B, b	Lower arm installation hole-front	26.5 x 14.5 (1.043 x 0.571)	E, e	Steering gear box installation nut	12 (0.47) nut
C, c	Lower arm installation hole-rear	26.5 x 14.5 (1.043 x 0.571)	—	—	—

FRONT SUSPENSION CROSSMEMBER (RHD)

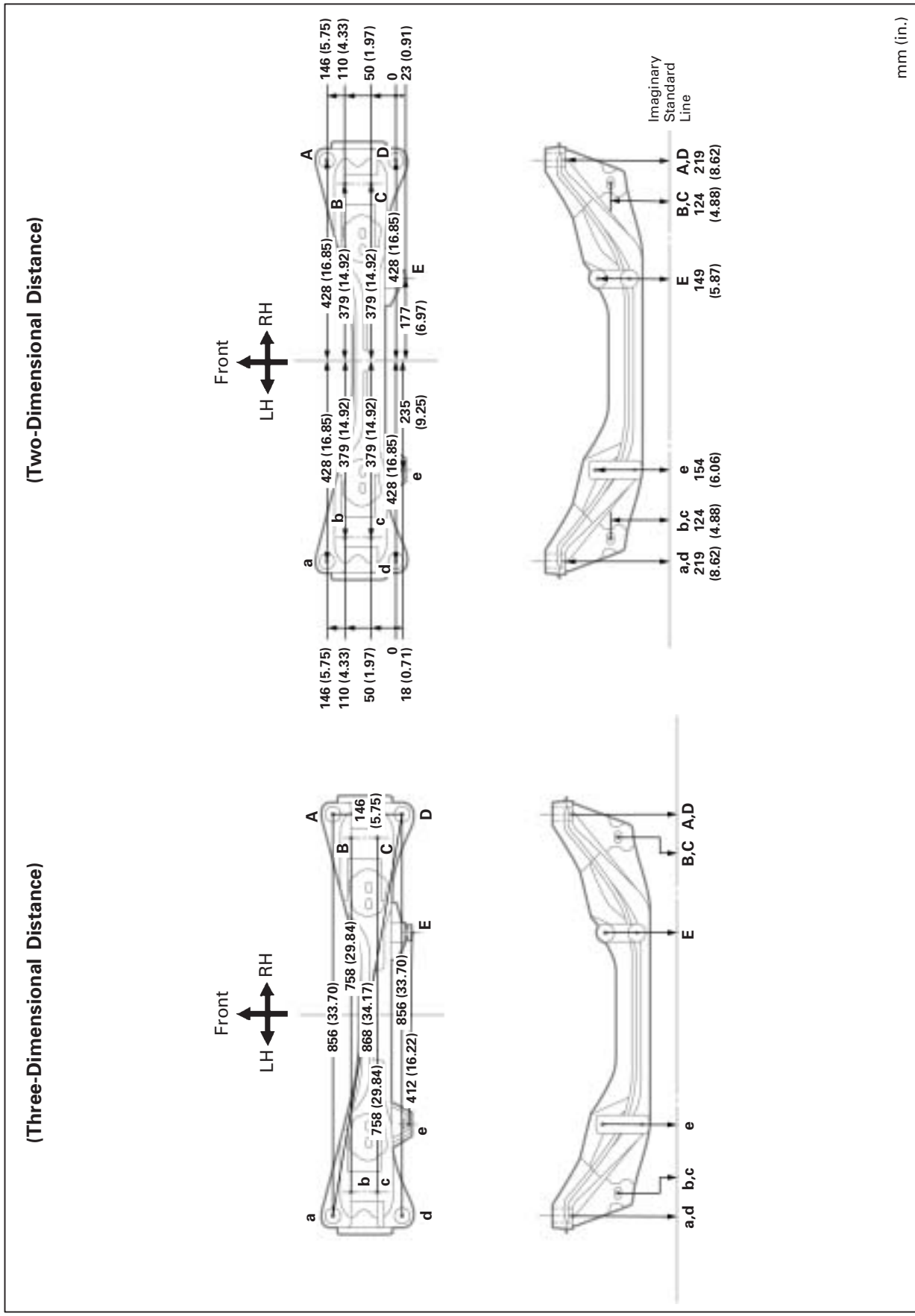

Symbol	Name	Hole dia.	Symbol	Name	Hole dia.
A, a	Front suspension crossmember installation hole-lower	18 (0.71)	D, d	Front suspension crossmember installation hole-lower	18 (0.71)
B, b	Lower arm installation hole-front	26.5 x 14.5 (1.043 x 0.571)	E, e	Steering gear box installation nut	12 (0.47) nut
C, c	Lower arm installation hole-rear	26.5 x 14.5 (1.043 x 0.571)	—	—	—

REAR SUSPENSION MEMBER

(Three-Dimensional Distance)

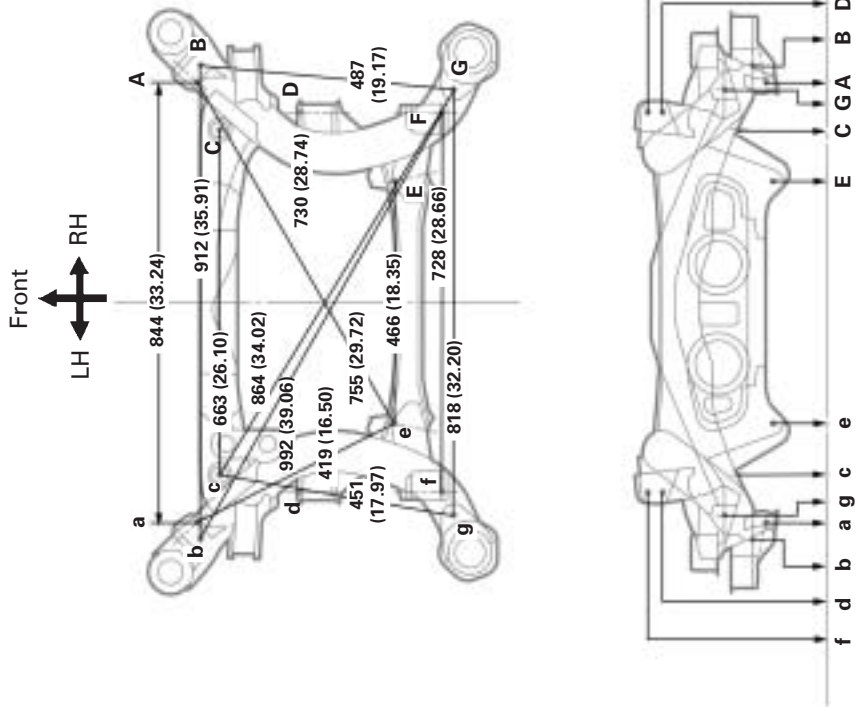

(Two-Dimensional Distance)

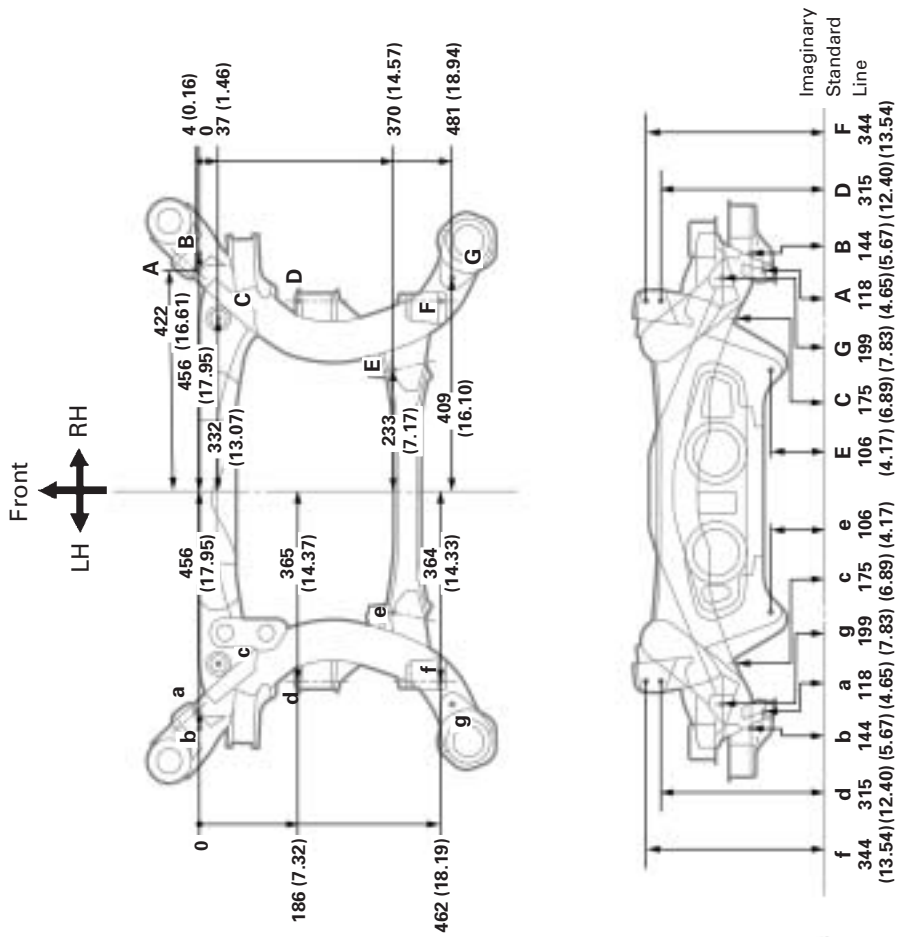

mm (in.)

Symbol	Name	Hole dia.
A, a	Lower arm installation hole-rear	12.2 (0.480)
B, b	Rear suspension member standard hole	15 (0.59)
C, c	Rear suspension member standard hole	15 (0.59)
D, d	Upper arm installation hole-front	12.2 (0.480)
E, e	Lower arm installation hole-front	14.2 (0.559)
F, f	Upper arm installation hole-rear	12.2 (0.480)
G, g	Rear suspension member standard hole	15 (0.59)
—	—	—