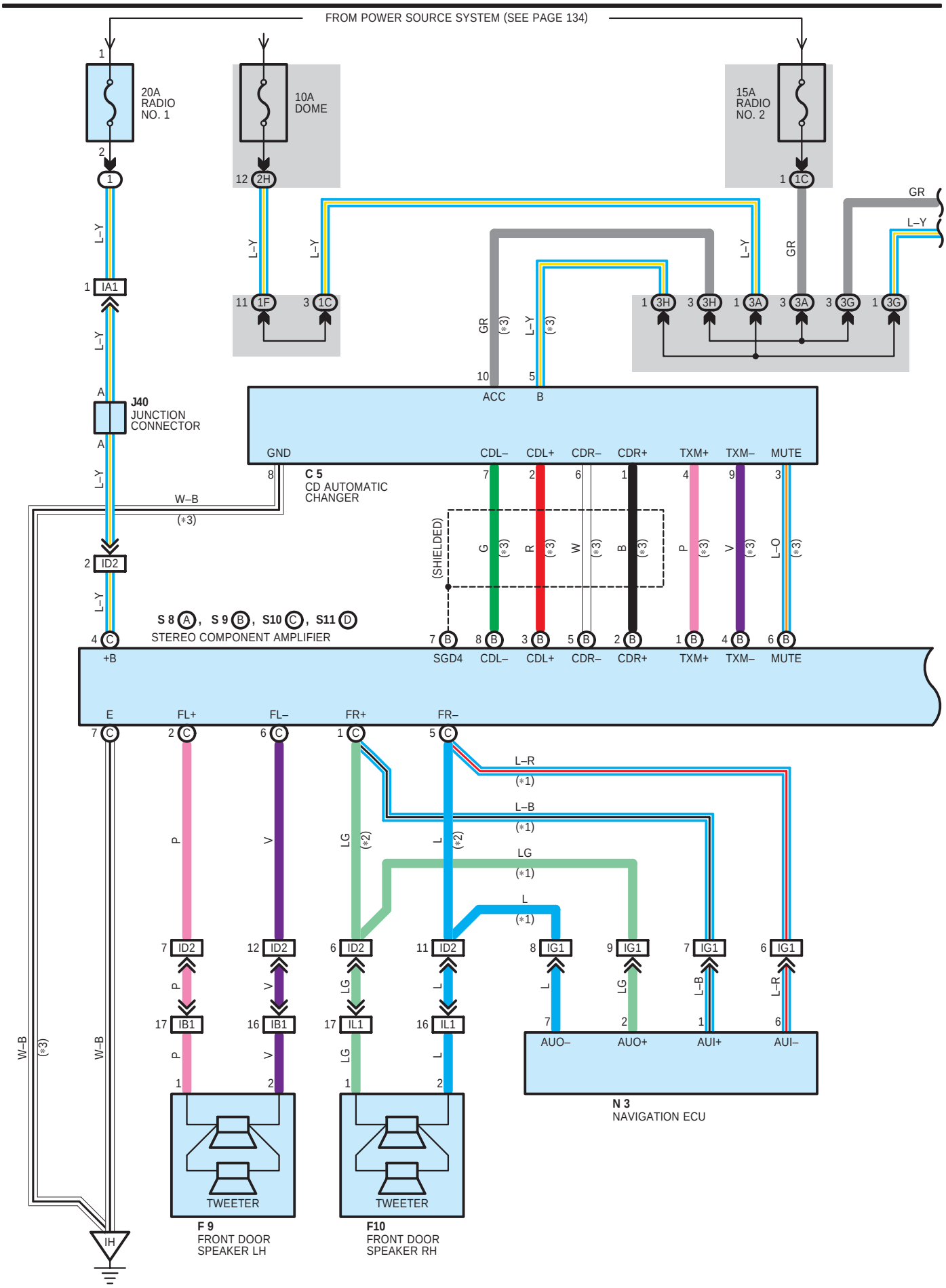
FROM POWER SOURCE SYSTEM (SEE PAGE 134)
20A RADIO NO. 1
10A DOME
15A RADIO NO. 2
J40 JUNCTION CONNECTOR
C 5 CD AUTOMATIC CHANGER
S 8 A, S 9 B, S10 C, S11 D
STEREO COMPONENT AMPLIFIER
N 3 NAVIGATION ECU
F 9 FRONT DOOR SPEAKER LH
F10 FRONT DOOR SPEAKER RH
TWEETER
TWEETER
ACC
B
GND
CDL–
CDL+
CDR–
CDR+
TXM+
TXM–
MUTE
(SHIELDED)
SGD4
+B
E
FL+
FL–
FR+
FR–
AUO–
AUO+
AUI+
AUI–
IH

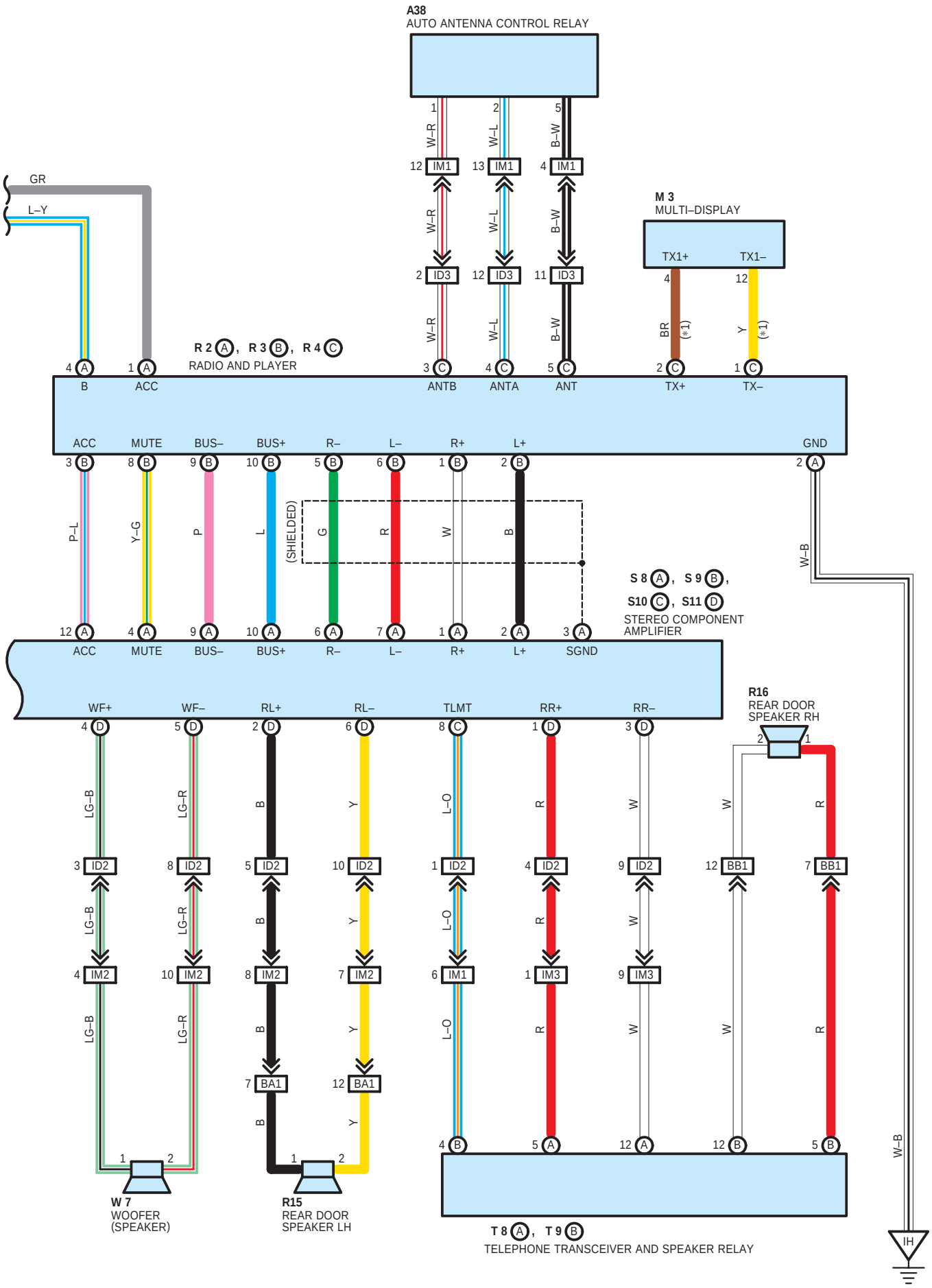
A38
AUTO ANTENNA CONTROL RELAY
M 3
MULTI–DISPLAY
TX1+
TX1–
R 2 A, R 3 B, R 4 C
RADIO AND PLAYER
B
ACC
ANTB
ANTA
ANT
TX+
TX–
ACC
MUTE
BUS–
BUS+
R–
L–
R+
L+
GND
(SHIELDED)
S 8 A, S 9 B,
S10 C, S11 D
STEREO COMPONENT
AMPLIFIER
SGND
R16
REAR DOOR
SPEAKER RH
WF+
WF–
RL+
RL–
TLMT
RR+
RR–
W 7
WOOFER
(SPEAKER)
R15
REAR DOOR
SPEAKER LH
T 8 A, T 9 B
TELEPHONE TRANSCEIVER AND SPEAKER RELAY
IH