(Cont. next page)

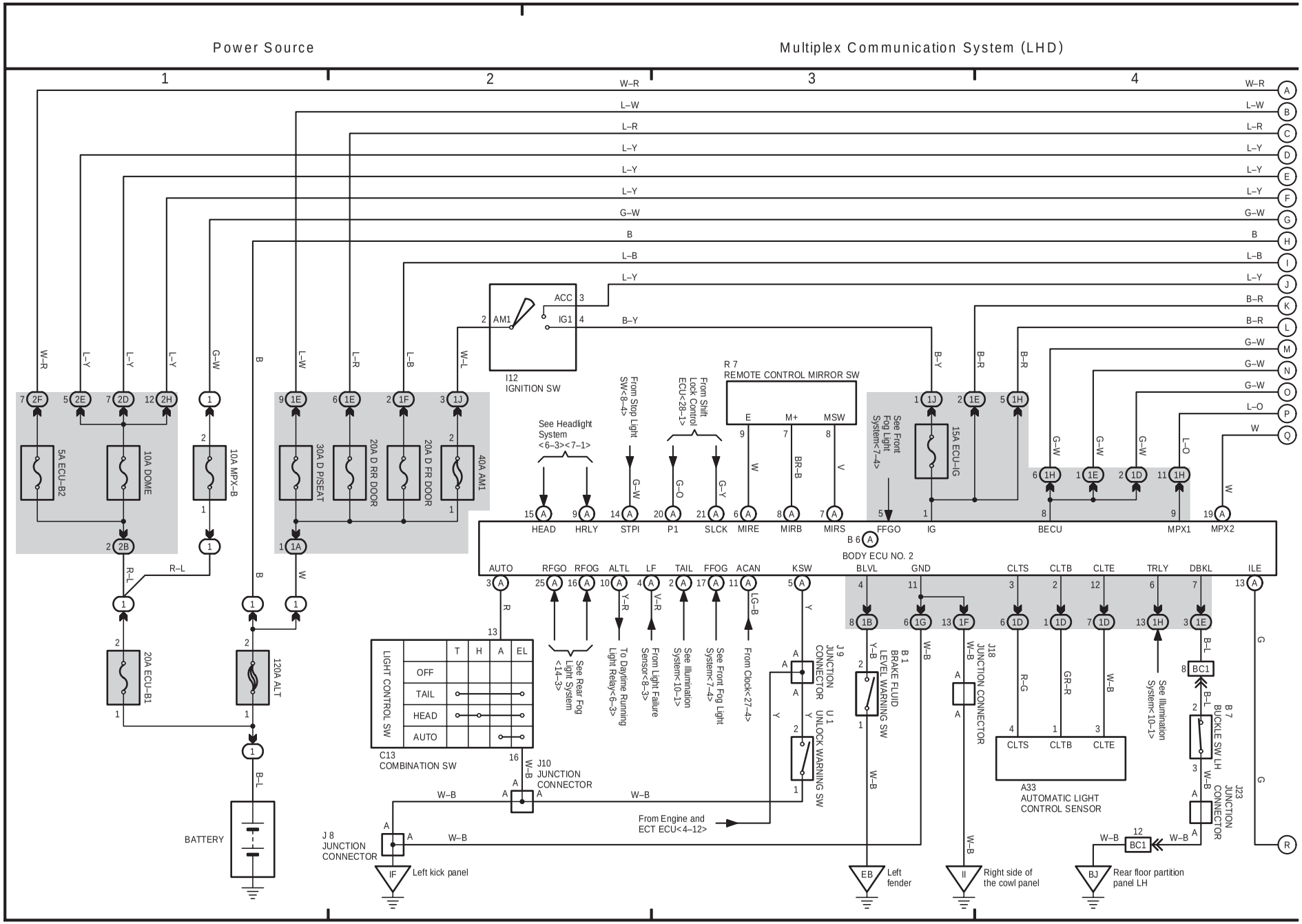

(Cont. next page)

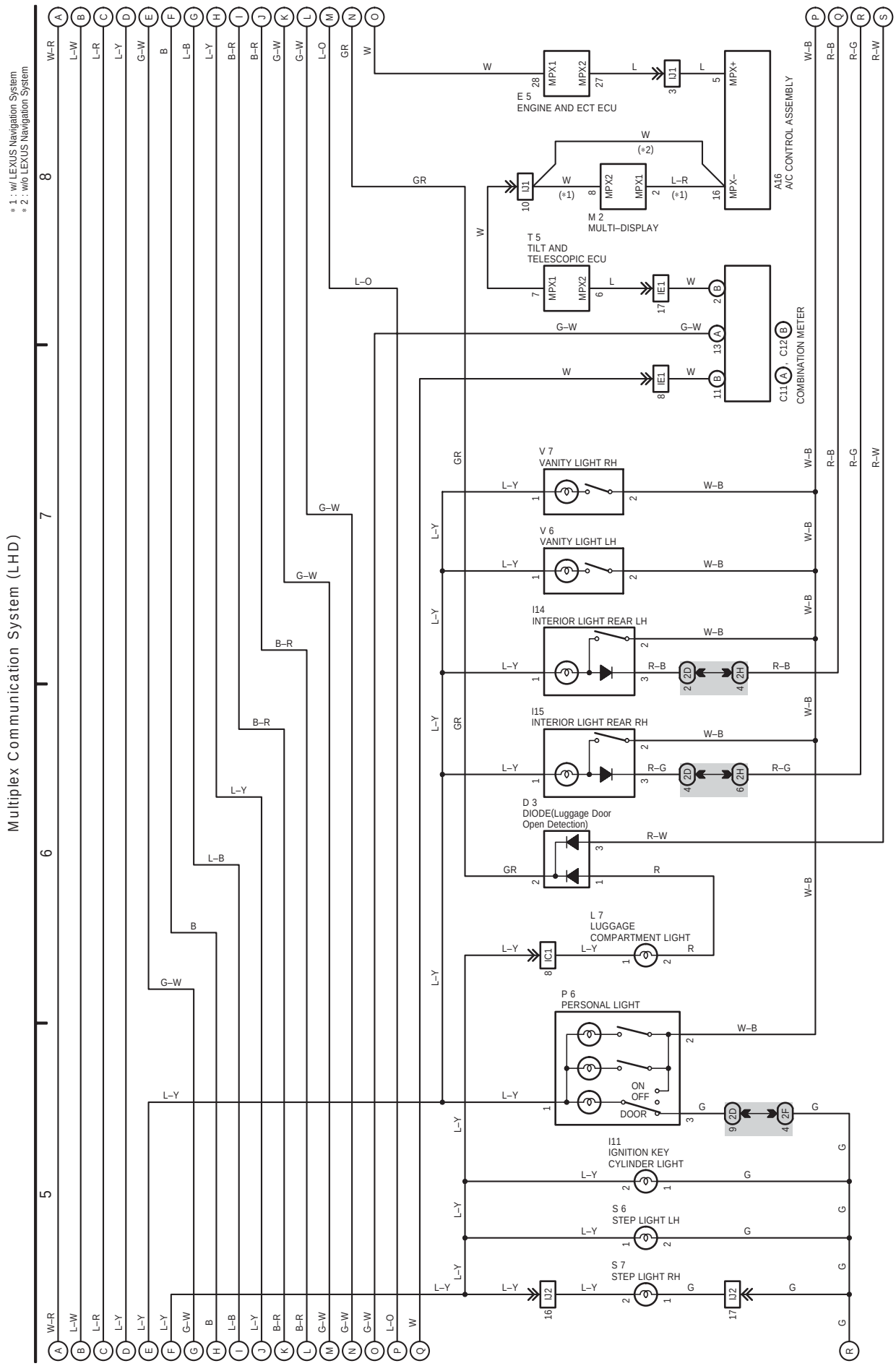

(Cont. next page)

Multiplex Communication System (LHD)

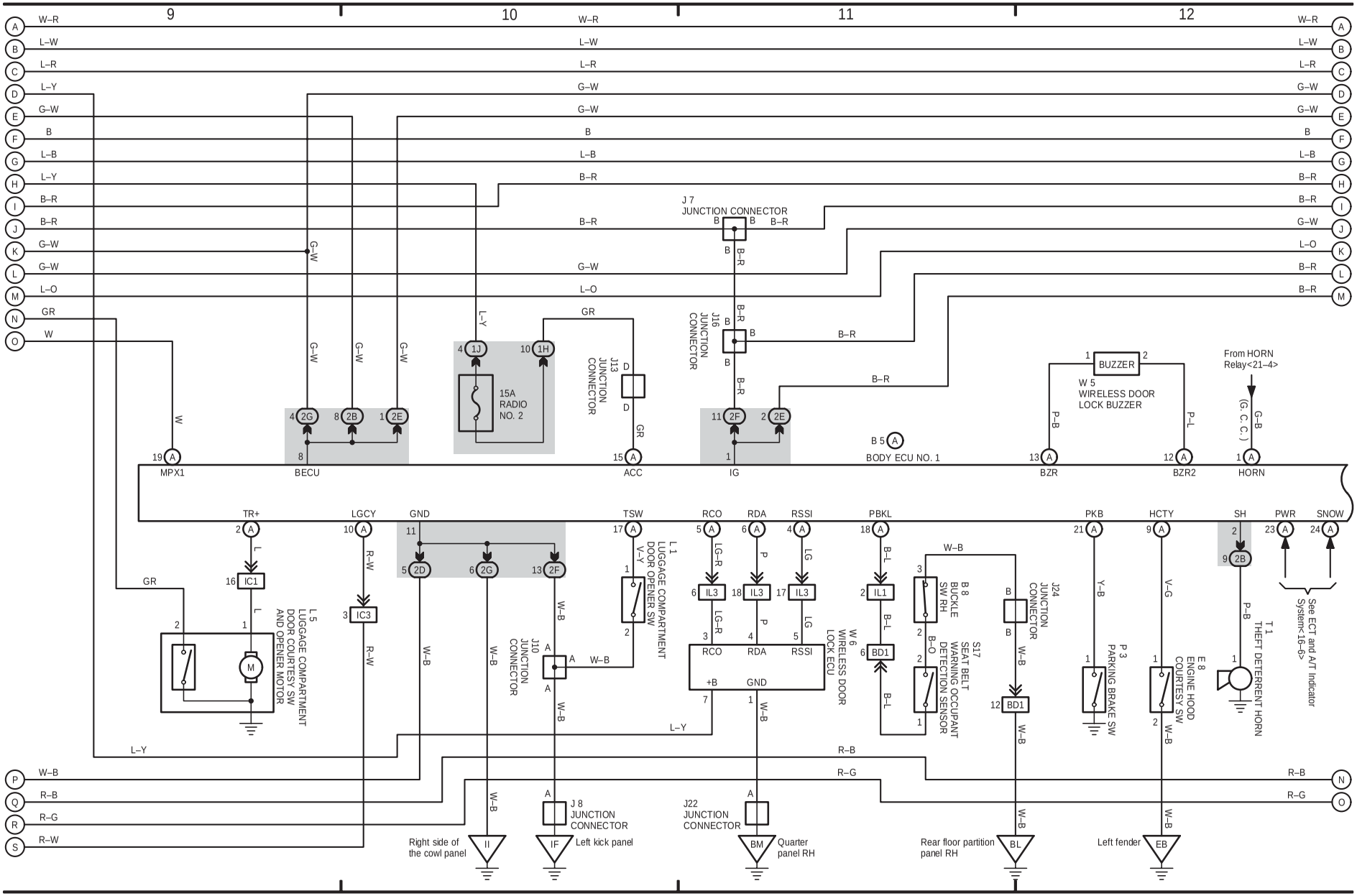

(Cont. next page)

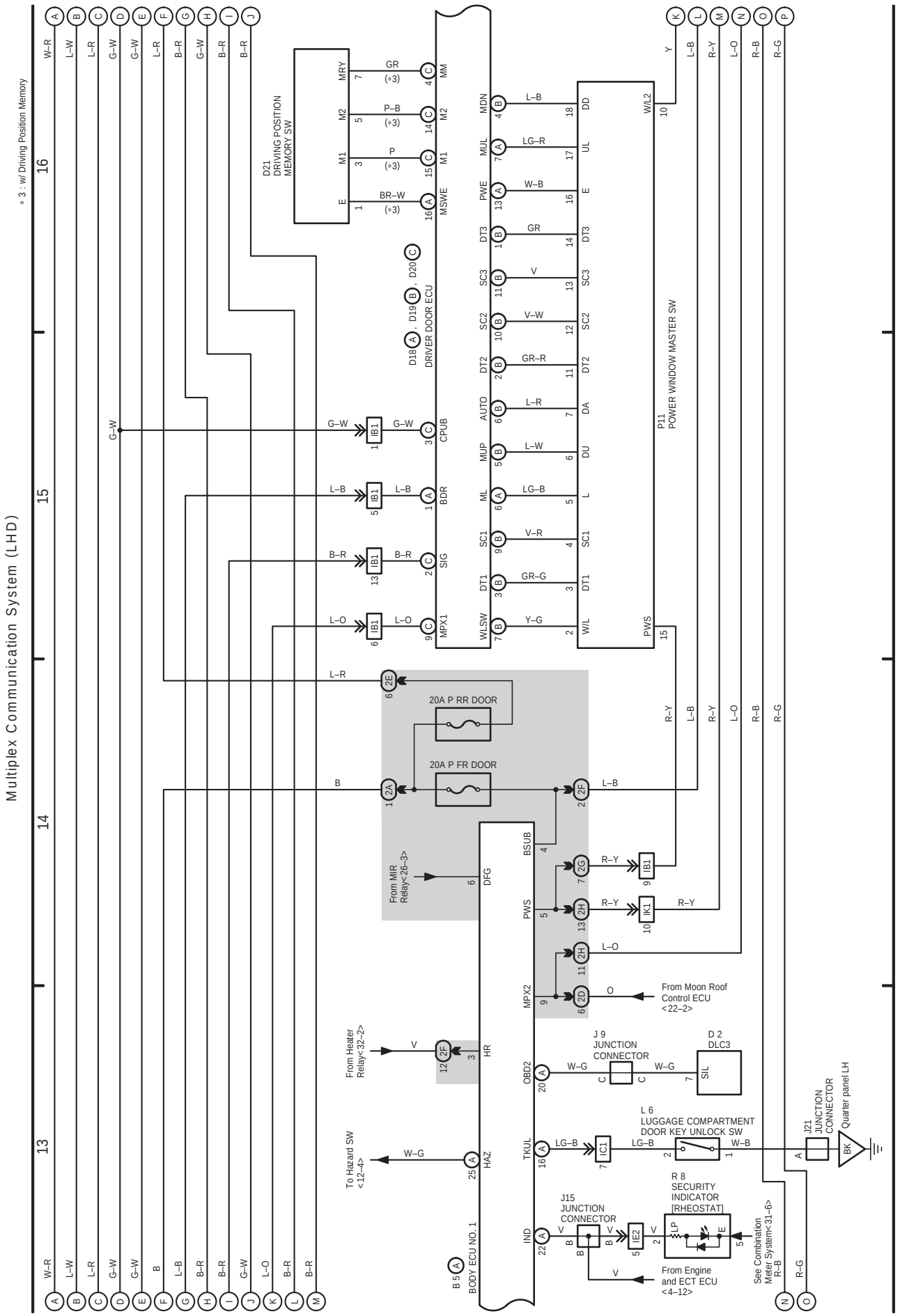

(Cont. next page)

Multiplex Communication System (LHD)

* 3 : w/ Driving Position Memory

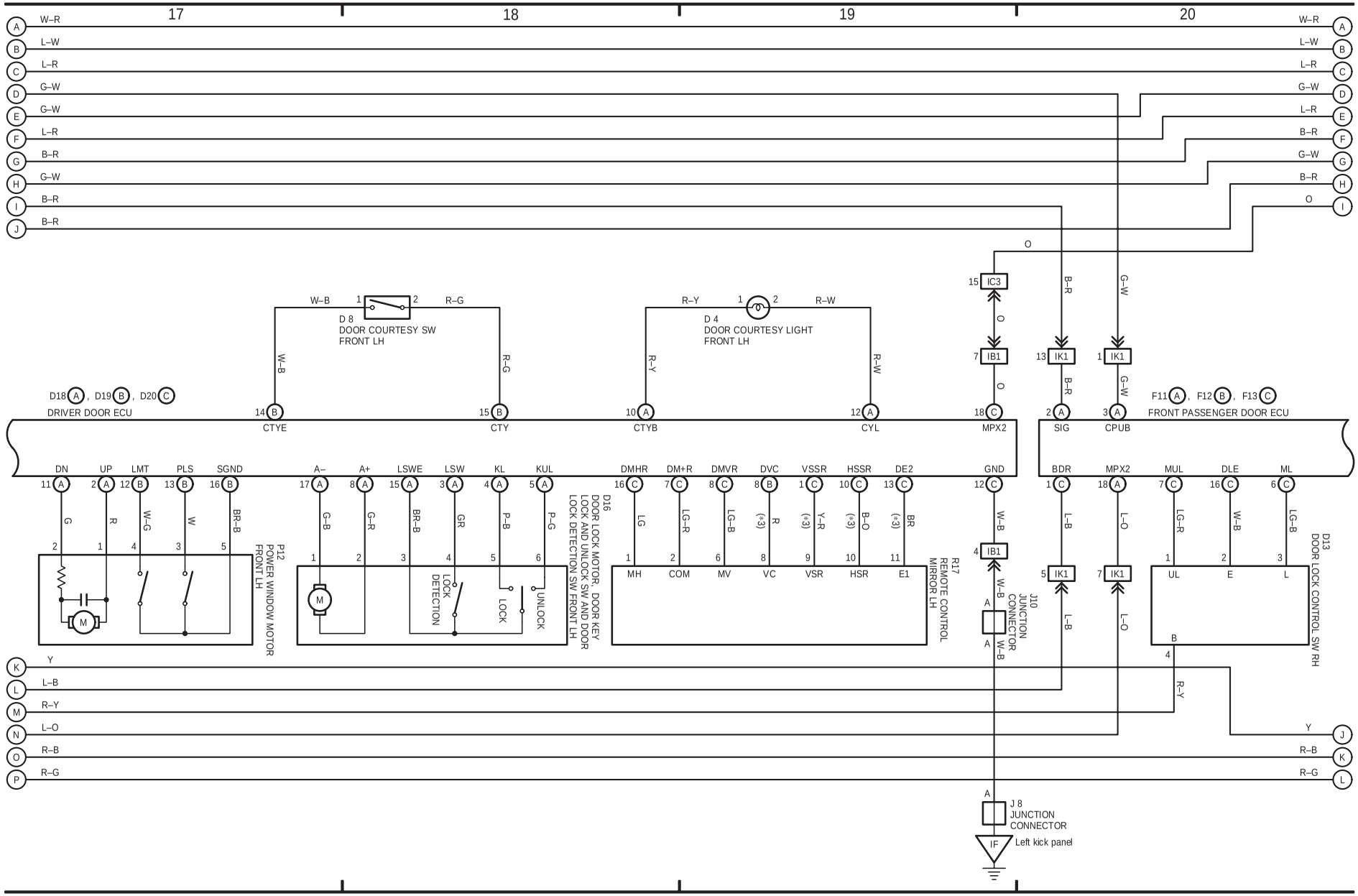

(Cont. next page)

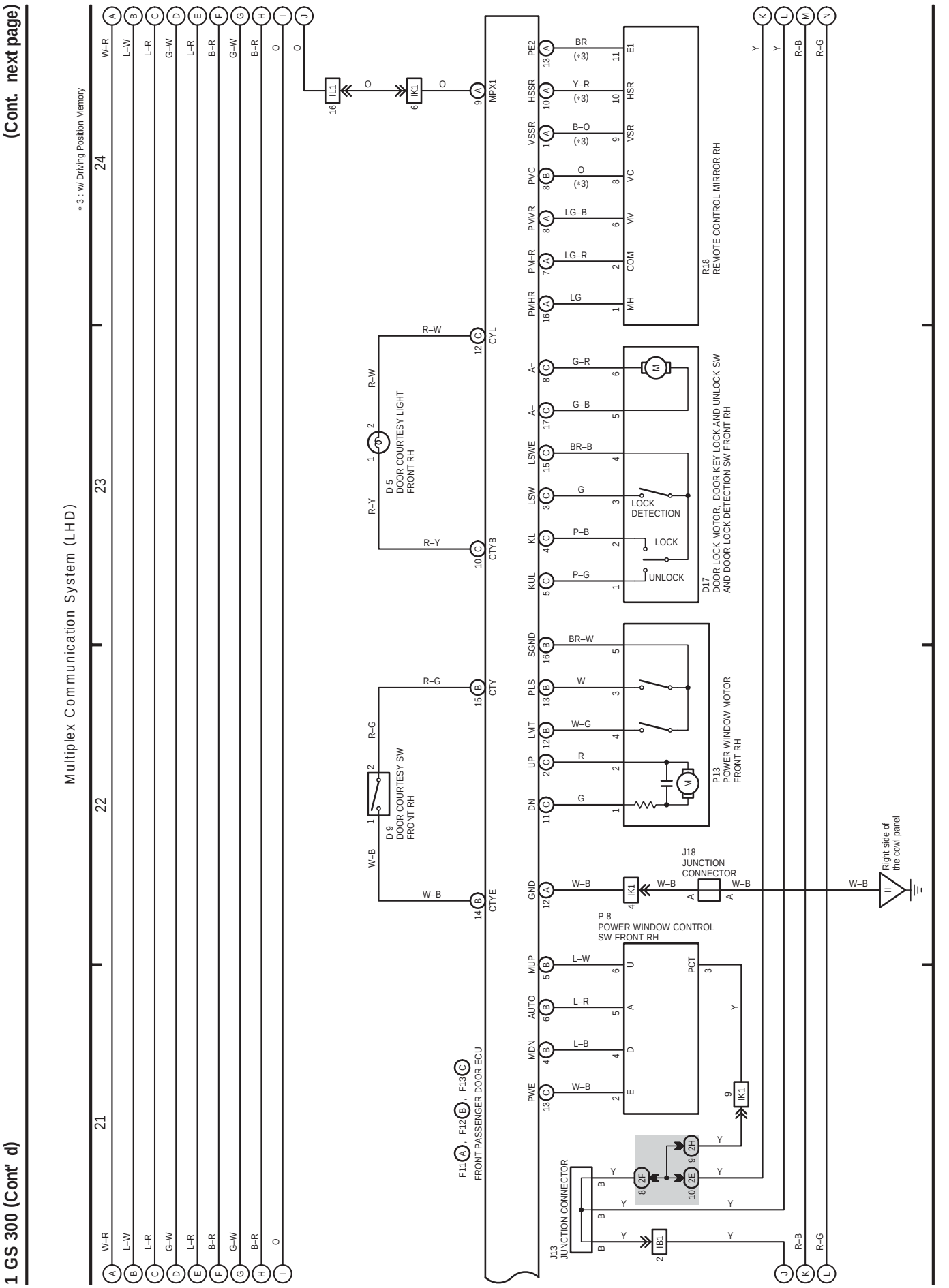

(Cont. next page)

Multiplex Communication System (LHD)

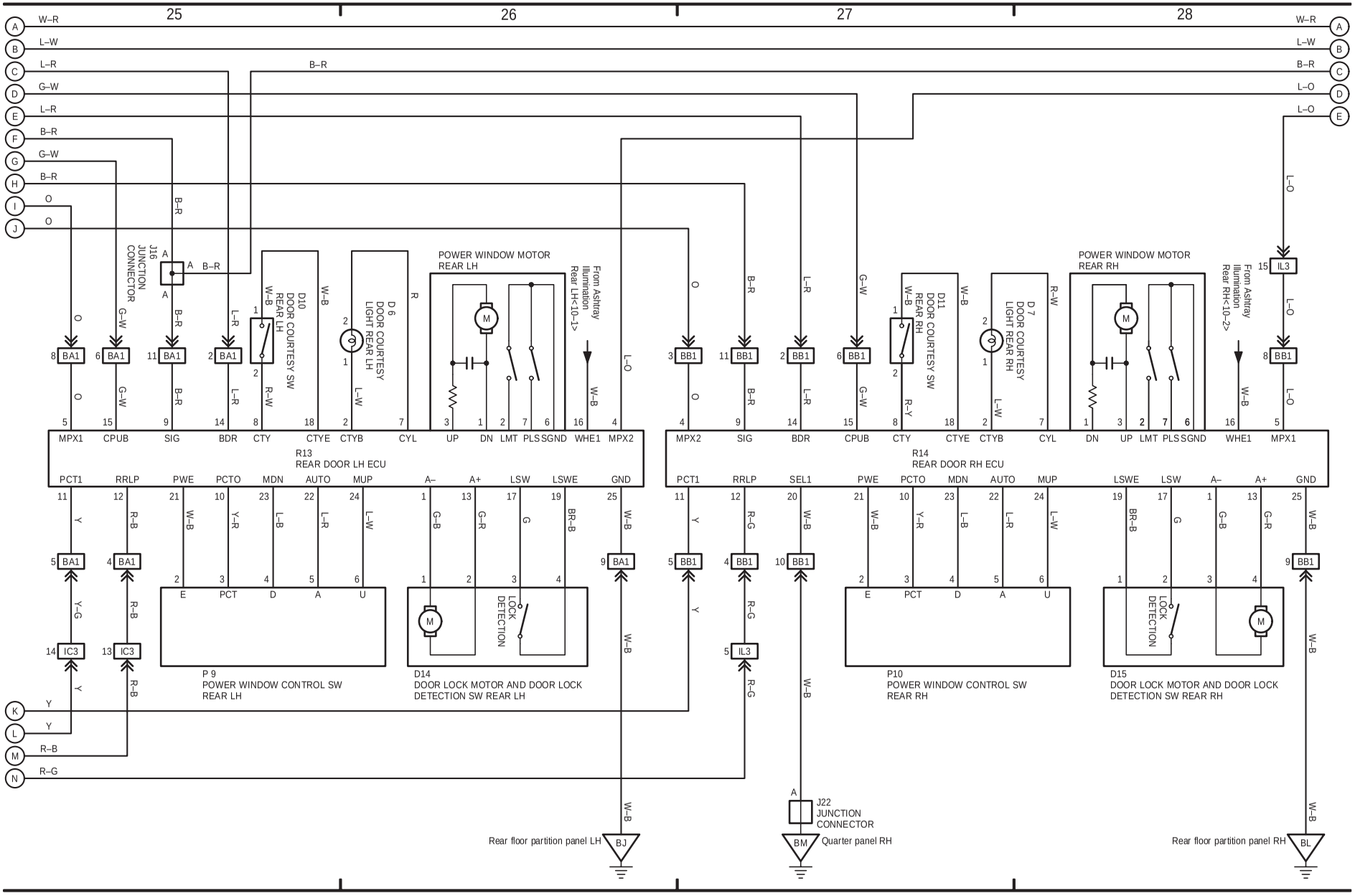

K

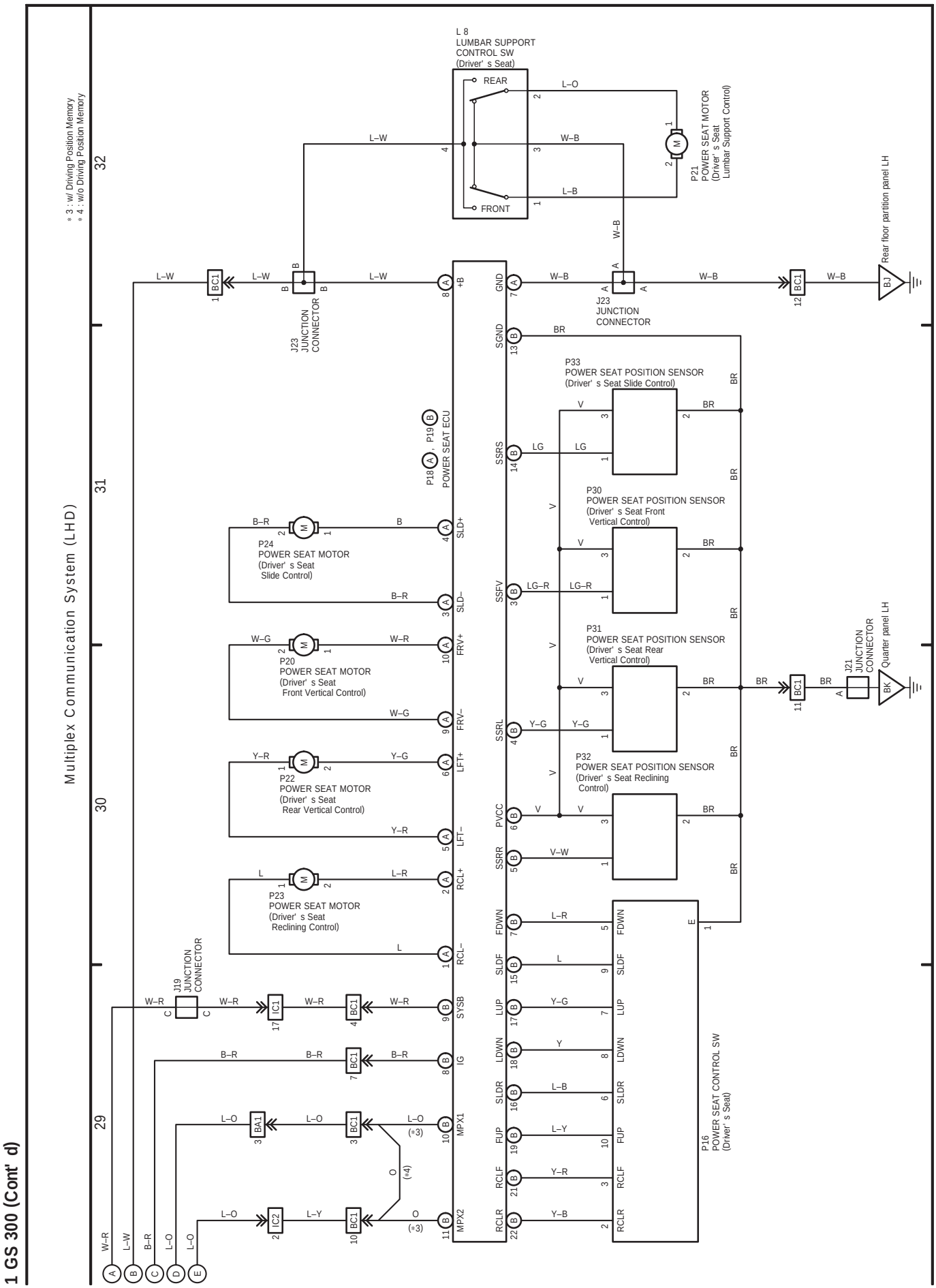
1 GS 300 (Cont' d)
Multiplex Communication System (LHD)
* 3 : w/ Driving Position Memory
* 4 : w/o Driving Position Memory
L 8
LUMBAR SUPPORT
CONTROL SW
(Driver' s Seat)
REAR
FRONT
P21
POWER SEAT MOTOR
(Driver' s Seat
Lumbar Support Control)
J23
JUNCTION
CONNECTOR
Rear floor partition panel LH
P18 (A), P19 (B)
POWER SEAT ECU
P33
POWER SEAT POSITION SENSOR
(Driver' s Seat Slide Control)
P30
POWER SEAT POSITION SENSOR
(Driver' s Seat Front
Vertical Control)
P31
POWER SEAT POSITION SENSOR
(Driver' s Seat Rear
Vertical Control)
P32
POWER SEAT POSITION SENSOR
(Driver' s Seat Reclining
Control)
P24
POWER SEAT MOTOR
(Driver' s Seat
Slide Control)
P20
POWER SEAT MOTOR
(Driver' s Seat
Front Vertical Control)
P22
POWER SEAT MOTOR
(Driver' s Seat
Rear Vertical Control)
P23
POWER SEAT MOTOR
(Driver' s Seat
Reclining Control)
J21
JUNCTION
CONNECTOR
Quarter panel LH
J19
JUNCTION
CONNECTOR
P16
POWER SEAT CONTROL SW
(Driver' s Seat)
+B
SLD+
SLD–
FRV+
FRV–
LFT+
LFT–
RCL+
RCL–
SYSB
IG
MPX1
MPX2
GND
SGND
SSRS
SSFV
SSRL
PVCC
SSRR
FDWN
SLDF
LUP
LDWN
SLDR
FUP
RCLF
RCLR
(*3)
(*4)