(Cont. next page)

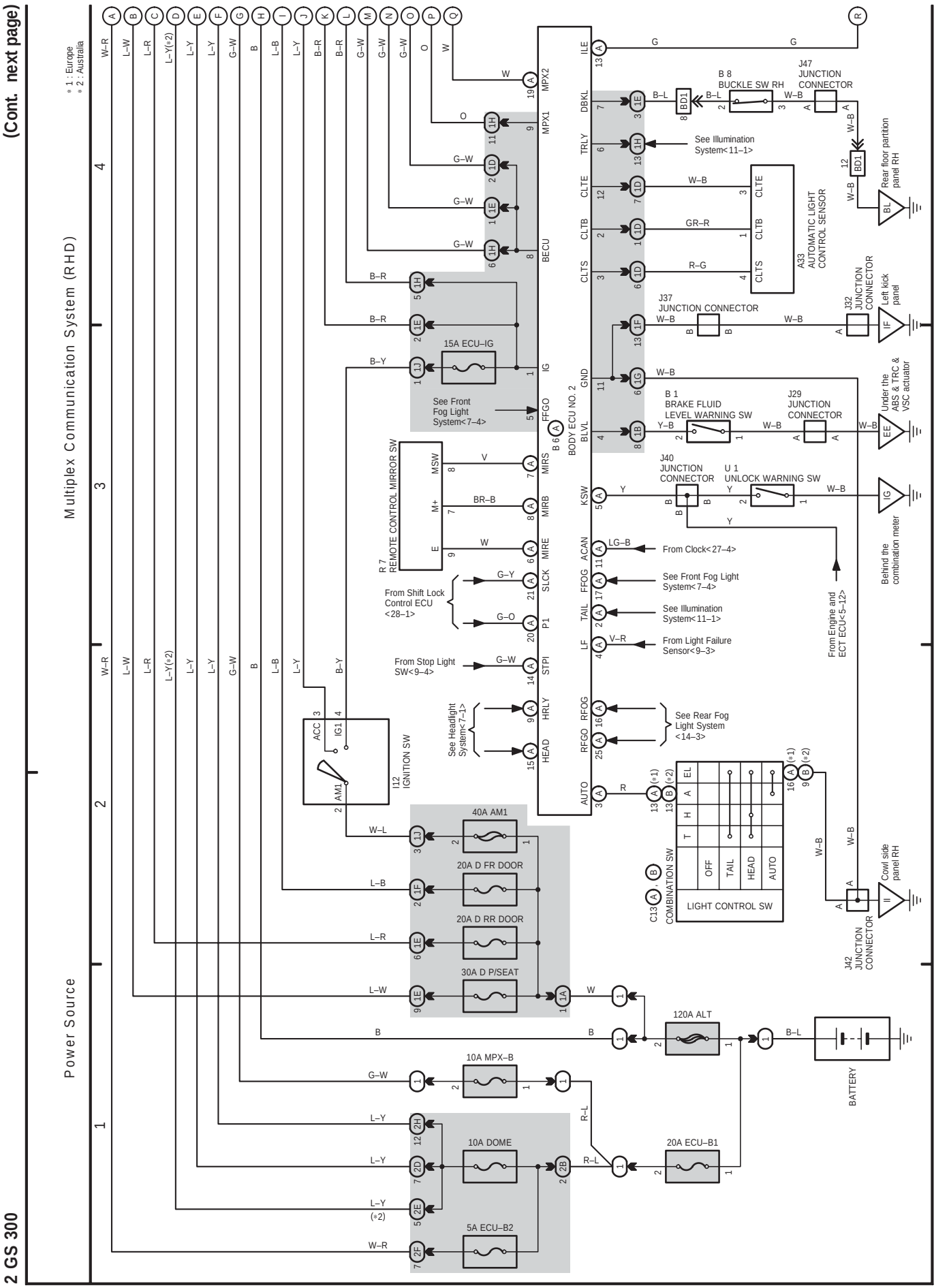

(Cont. next page)

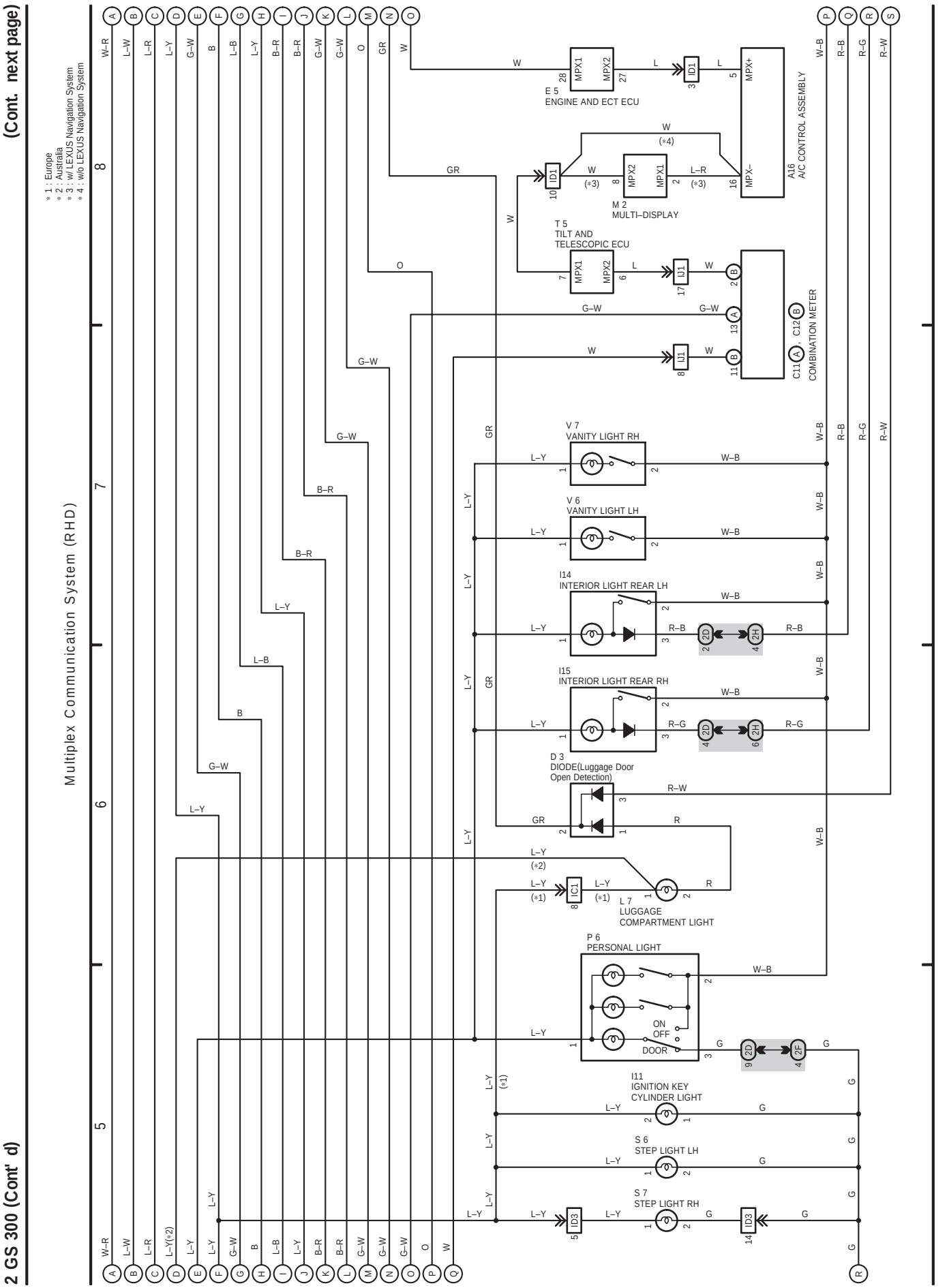

(Cont. next page)

Multiplex Communication System (RHD)

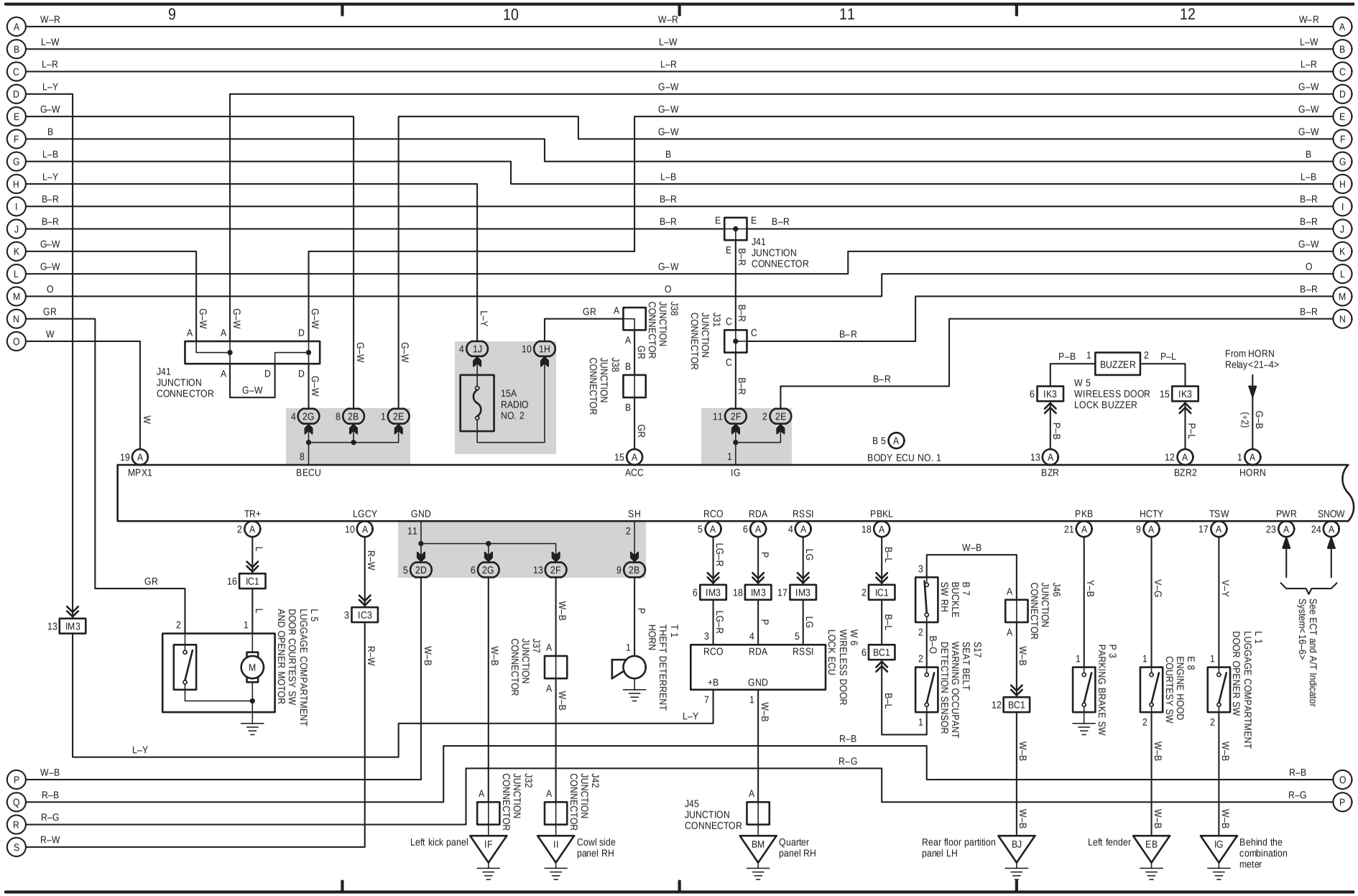

(Cont. next page)

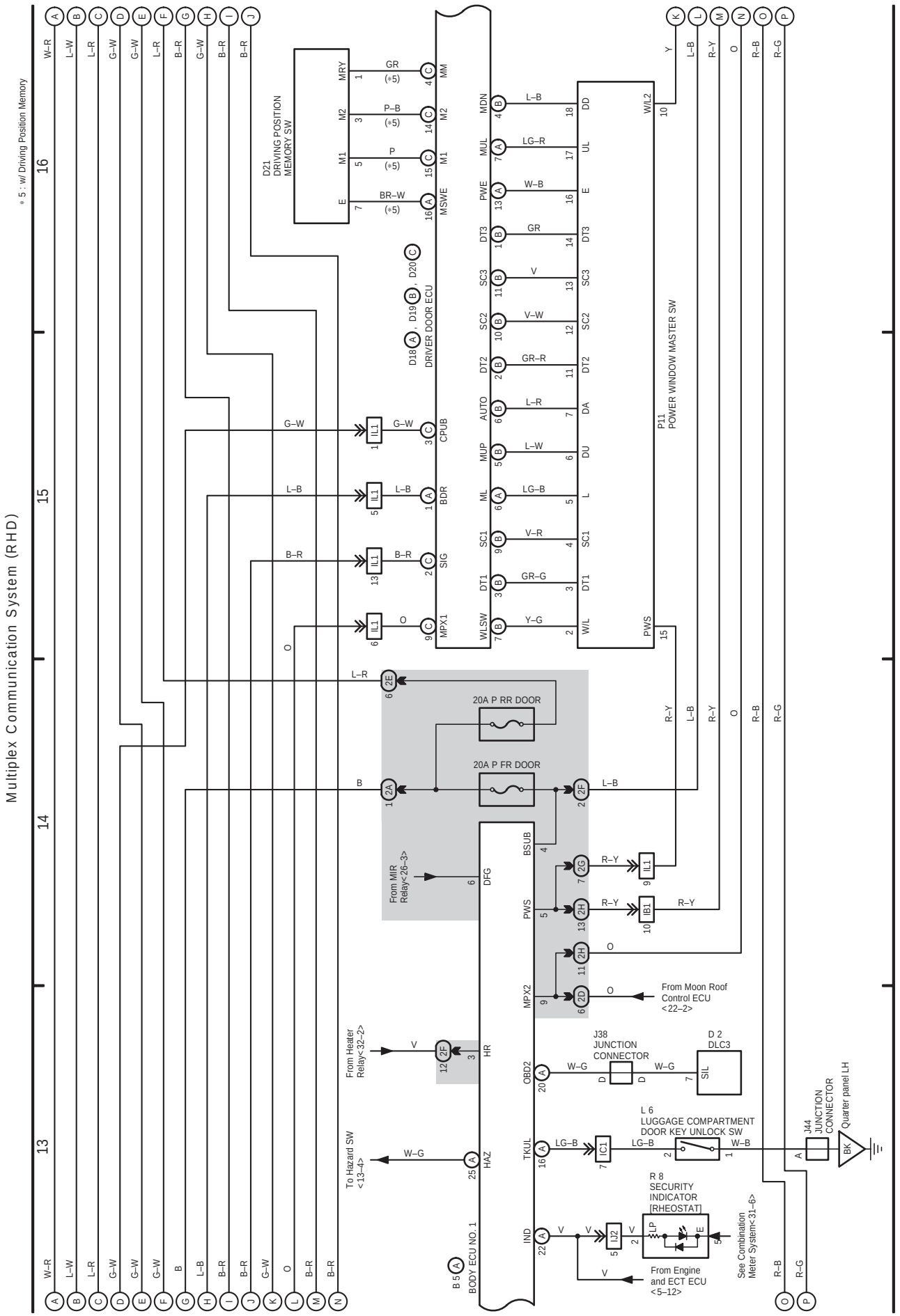

(Cont. next page)

Multiplex Communication System (RHD)

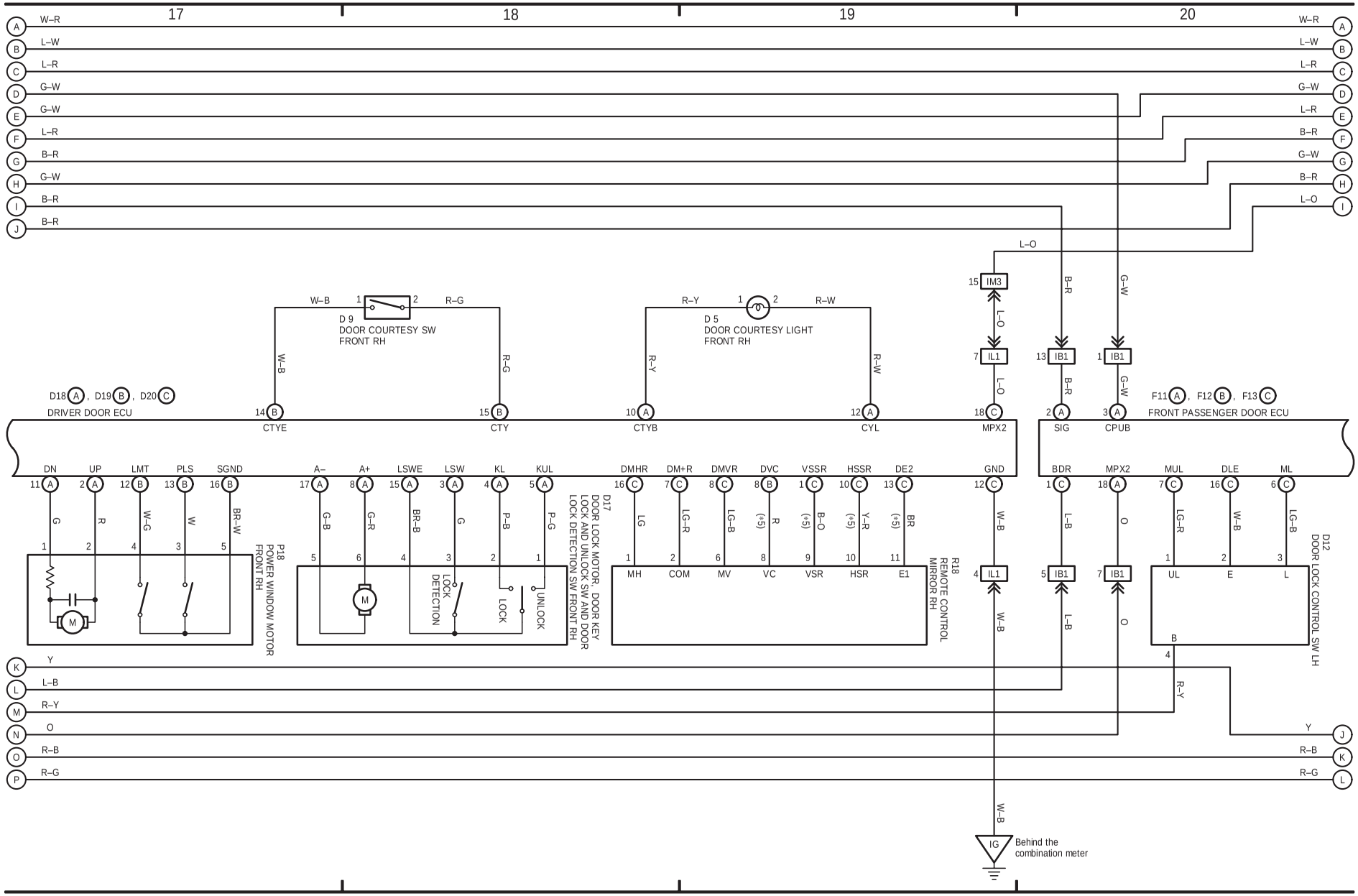

(Cont. next page)

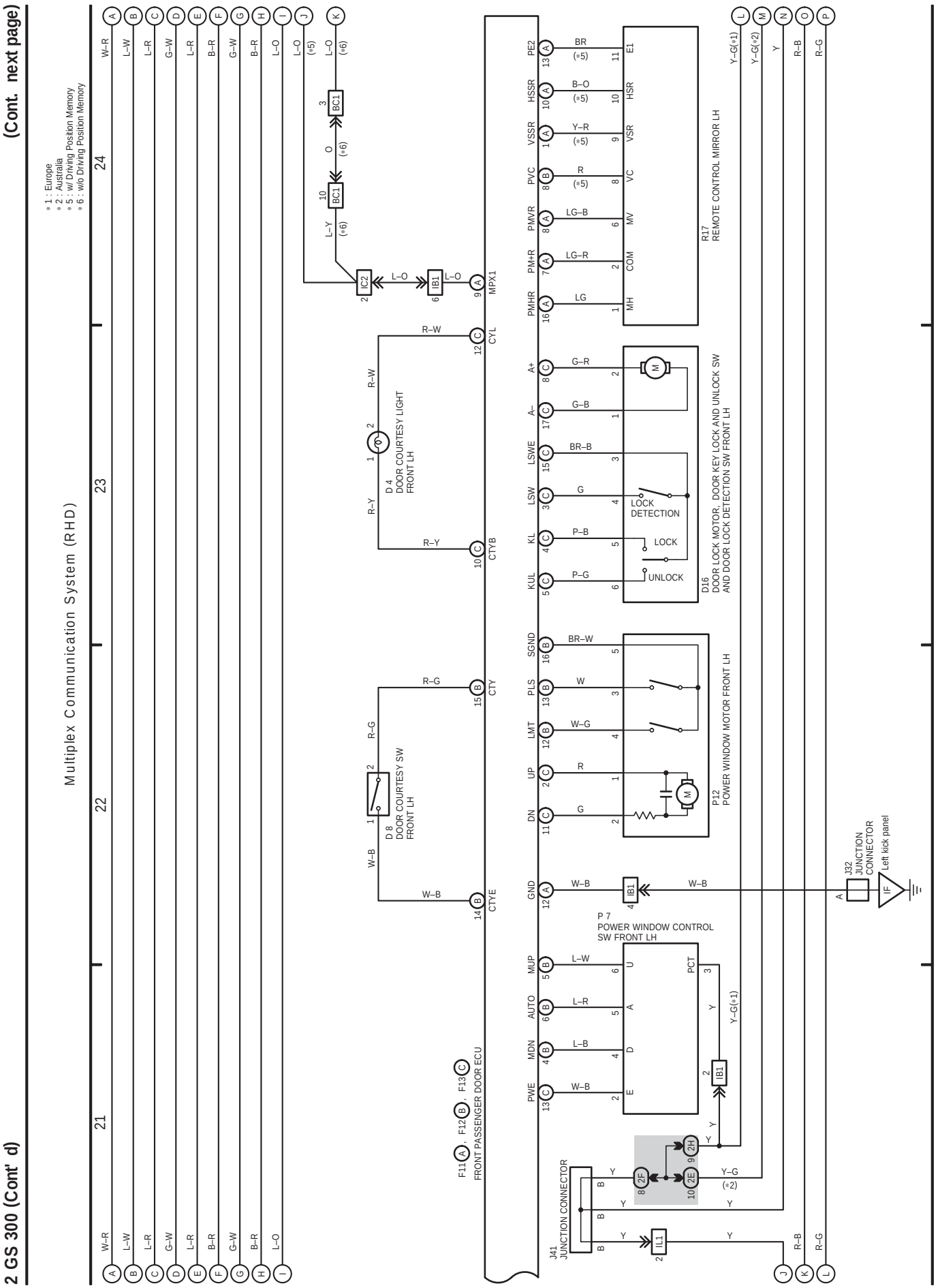

(Cont. next page)

Multiplex Communication System (RHD)

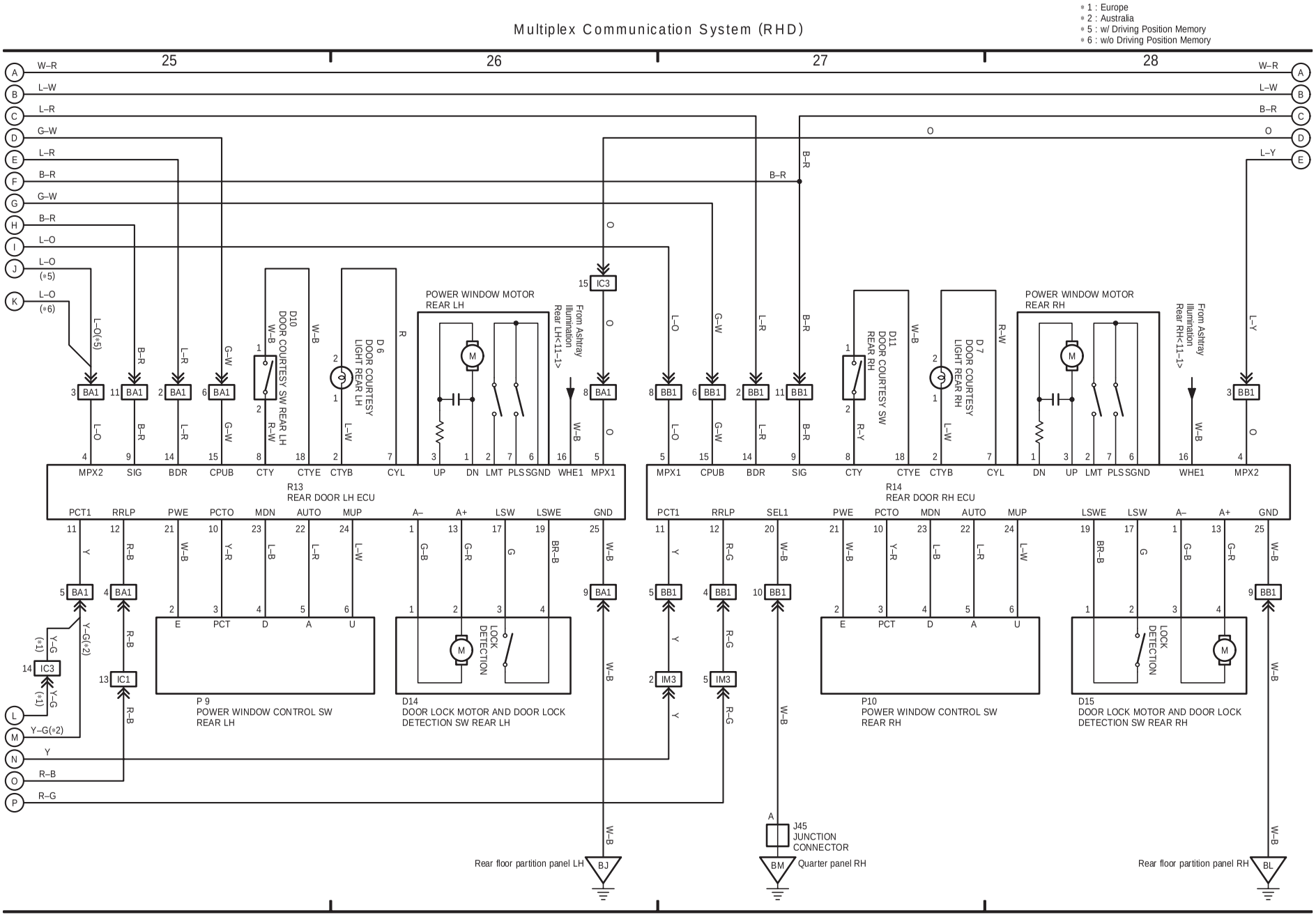

K

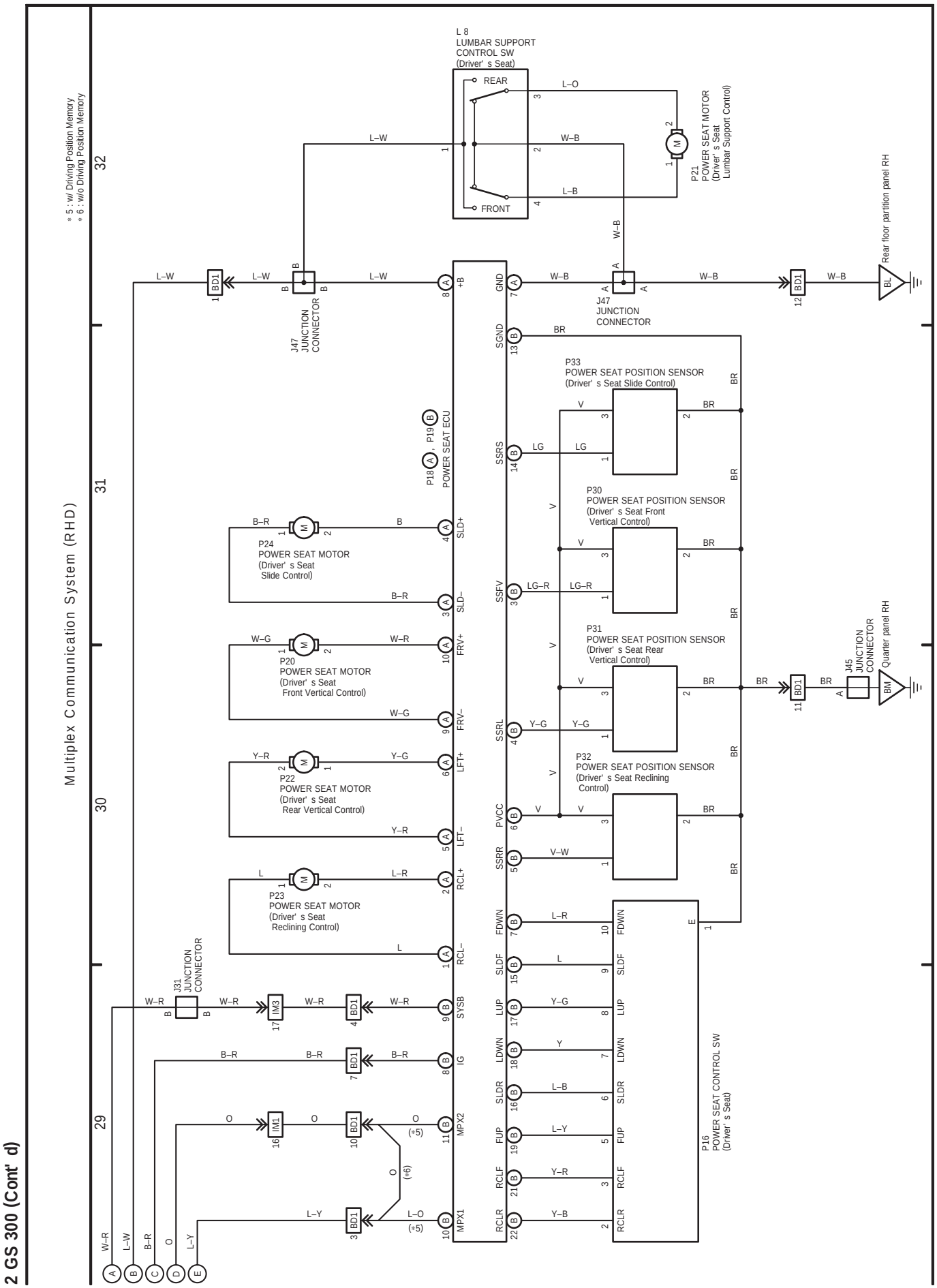
Multiplex Communication System (RHD)
* 5 : w/ Driving Position Memory
* 6 : w/o Driving Position Memory
L 8
LUMBAR SUPPORT
CONTROL SW
(Driver' s Seat)
REAR
FRONT
P21
POWER SEAT MOTOR
(Driver' s Seat
Lumbar Support Control)
Rear floor partition panel RH
J47
JUNCTION
CONNECTOR
P33
POWER SEAT POSITION SENSOR
(Driver' s Seat Slide Control)
P18 , P19
POWER SEAT ECU
P30
POWER SEAT POSITION SENSOR
(Driver' s Seat Front
Vertical Control)
P24
POWER SEAT MOTOR
(Driver' s Seat
Slide Control)
P31
POWER SEAT POSITION SENSOR
(Driver' s Seat Rear
Vertical Control)
P20
POWER SEAT MOTOR
(Driver' s Seat
Front Vertical Control)
P32
POWER SEAT POSITION SENSOR
(Driver' s Seat Reclining
Control)
P22
POWER SEAT MOTOR
(Driver' s Seat
Rear Vertical Control)
P23
POWER SEAT MOTOR
(Driver' s Seat
Reclining Control)
J45
JUNCTION
CONNECTOR
Quarter panel RH
J31
JUNCTION
CONNECTOR
P16
POWER SEAT CONTROL SW
(Driver' s Seat)
+B
GND
SGND
SSRS
SSFV
SSRL
PVCC
SSRR
FDWN
SLDF
LUP
LDWN
SLDR
FUP
RCLF
RCLR
SLD+
SLD–
FRV+
FRV–
LFT+
LFT–
RCL+
RCL–
SYSB
IG
MPX2
MPX1