(Cont. next page)

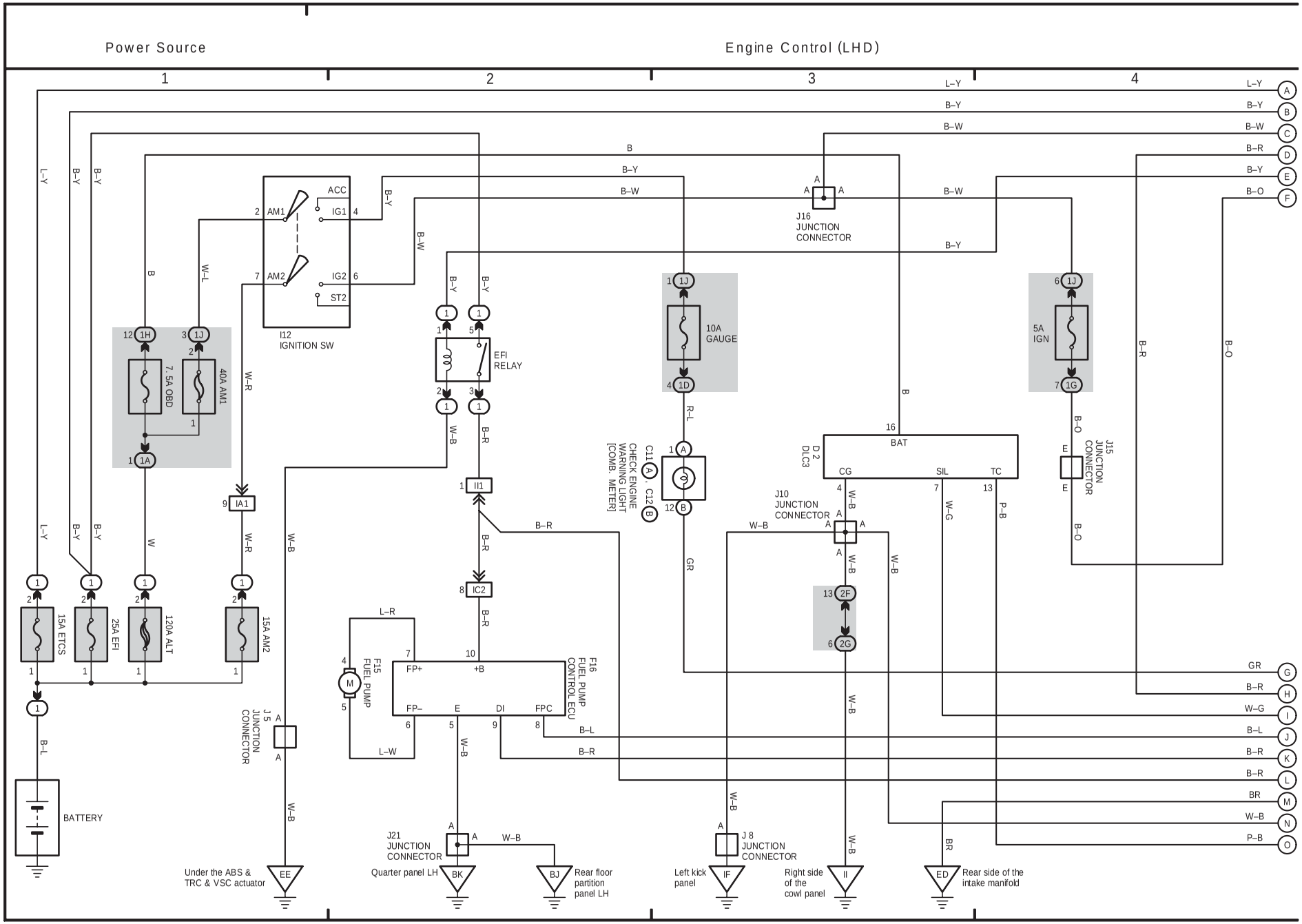

K

(Cont. next page)

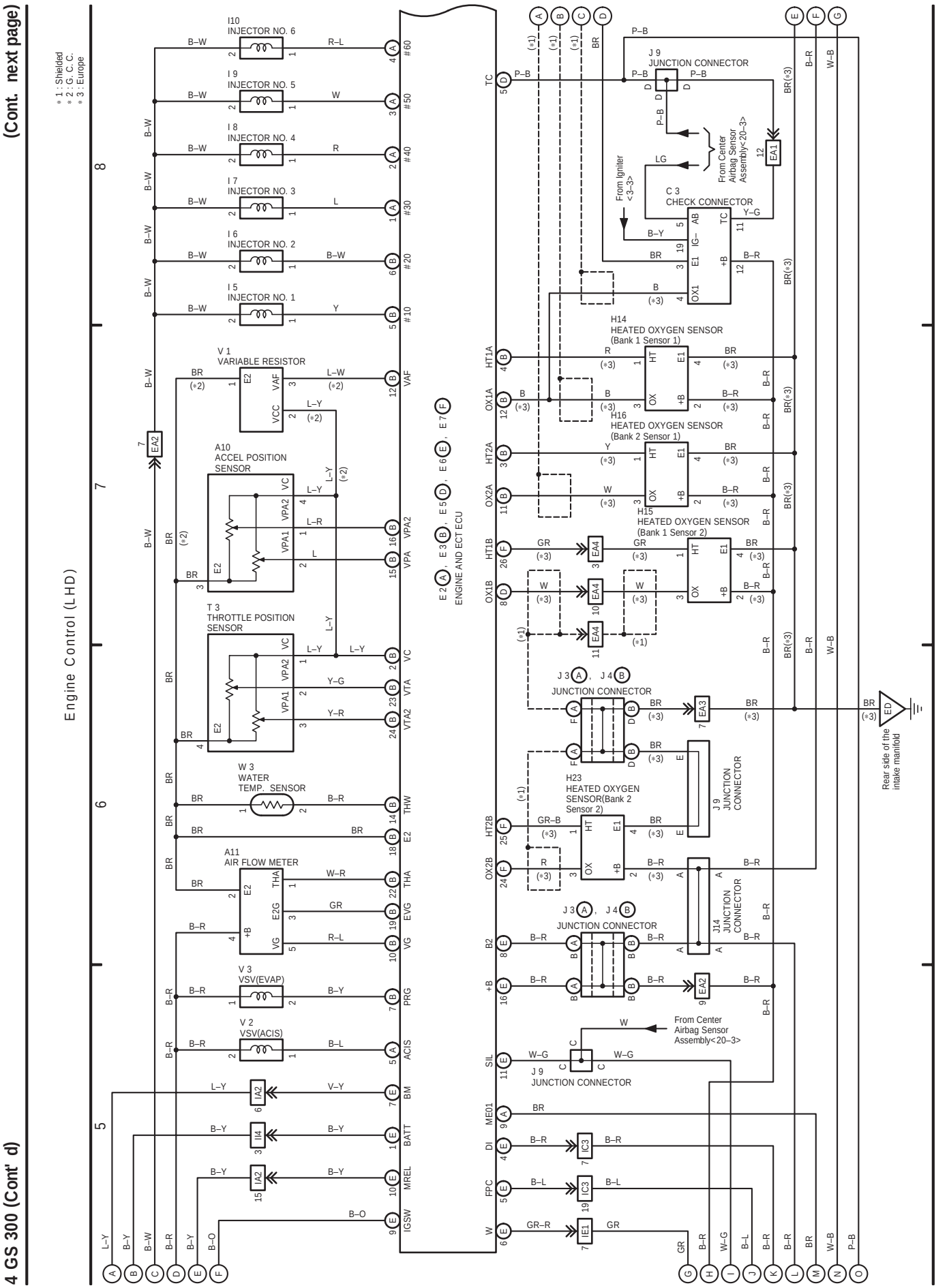
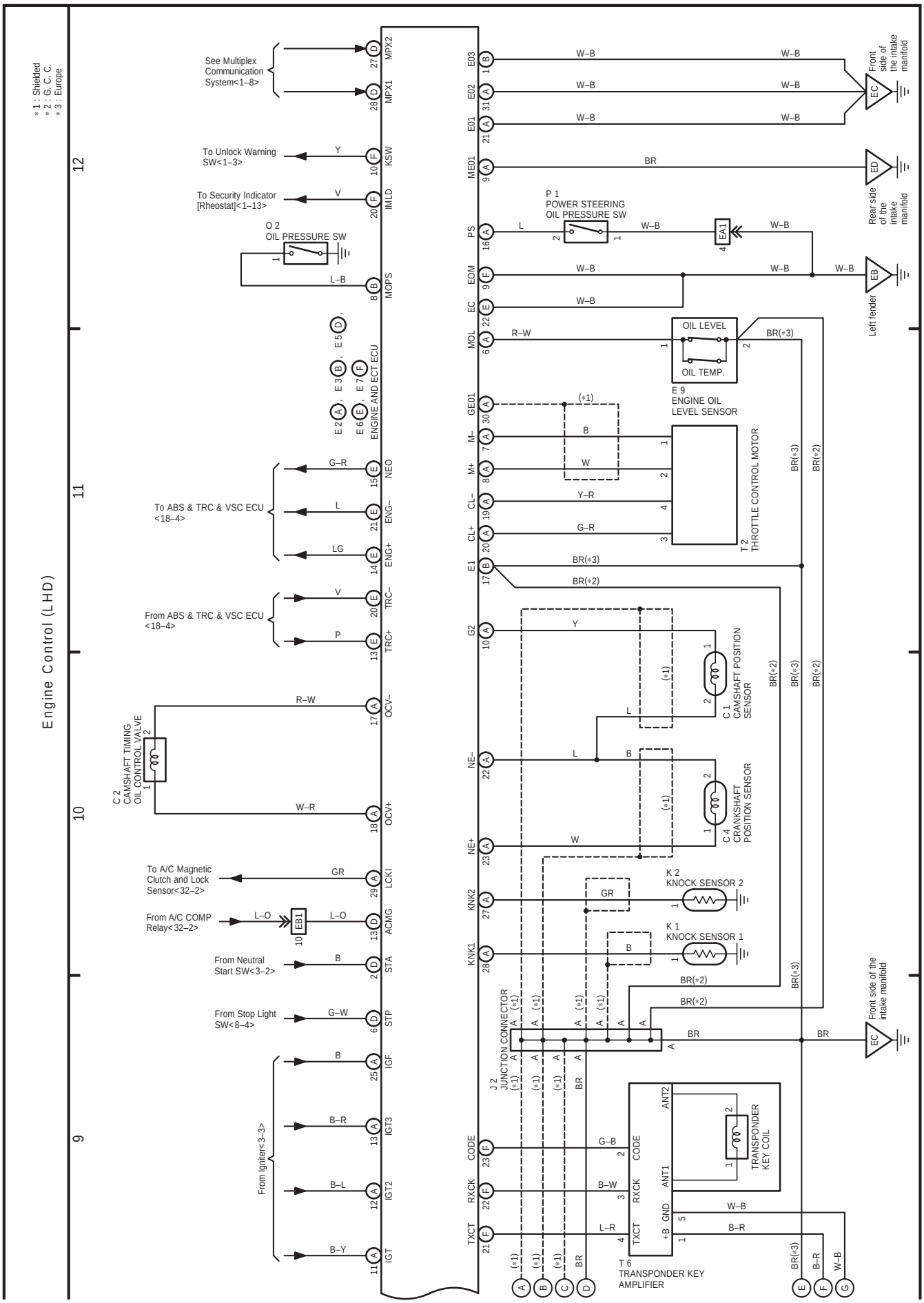
4 GS 300 (Cont' d)