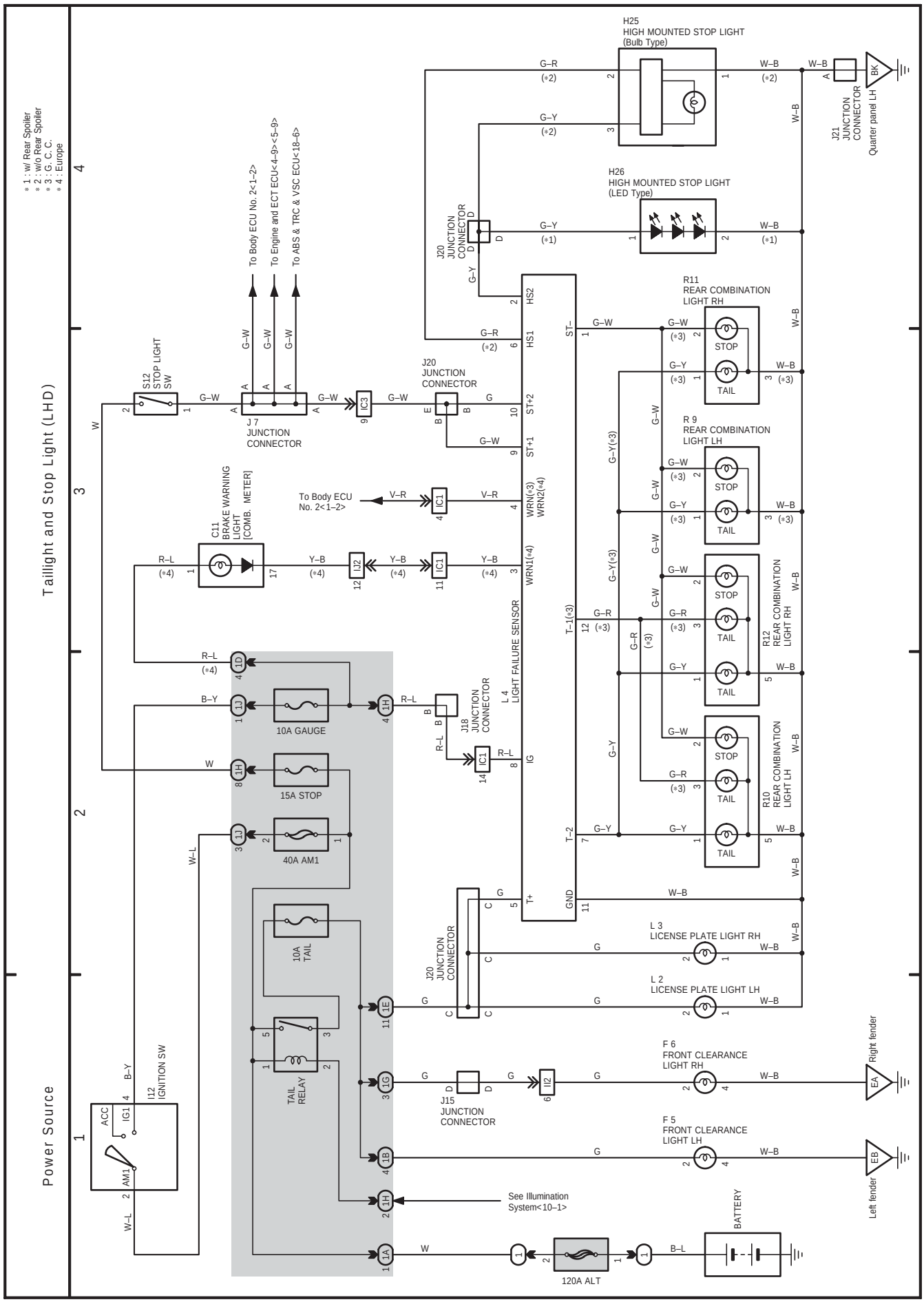
Taillight and Stop Light (LHD)
Power Source
* 1 : w/ Rear Spoiler
* 2 : w/o Rear Spoiler
* 3 : G. C. C.
* 4 : Europe
H25
HIGH MOUNTED STOP LIGHT
(Bulb Type)
H26
HIGH MOUNTED STOP LIGHT
(LED Type)
J21
JUNCTION
CONNECTOR
Quarter panel LH
J20
JUNCTION
CONNECTOR
To Body ECU No. 2<1–2>
To Engine and ECT ECU<4–9><5–9>
To ABS & TRC & VSC ECU<18–6>
S12
STOP LIGHT
SW
J 7
JUNCTION
CONNECTOR
IC3
C11
BRAKE WARNING
LIGHT
[COMB. METER]
To Body ECU
No. 2<1–2>
IC1
IJ2
J18
JUNCTION
CONNECTOR
L 4
LIGHT FAILURE SENSOR
HS2
HS1
ST+2
ST+1
WRN(*3)
WRN2(*4)
WRN1(*4)
IG
T+
ST–
T–1(*3)
T–2
GND
R11
REAR COMBINATION
LIGHT RH
R 9
REAR COMBINATION
LIGHT LH
R12
REAR COMBINATION
LIGHT RH
R10
REAR COMBINATION
LIGHT LH
STOP
TAIL
10A GAUGE
15A STOP
40A AM1
10A
TAIL
TAIL
RELAY
J12
IGNITION SW
ACC
IG1
AM1
L 3
LICENSE PLATE LIGHT RH
L 2
LICENSE PLATE LIGHT LH
F 6
FRONT CLEARANCE
LIGHT RH
F 5
FRONT CLEARANCE
LIGHT LH
J15
JUNCTION
CONNECTOR
Right fender
Left fender
See Illumination
System<10–1>
BATTERY
120A ALT