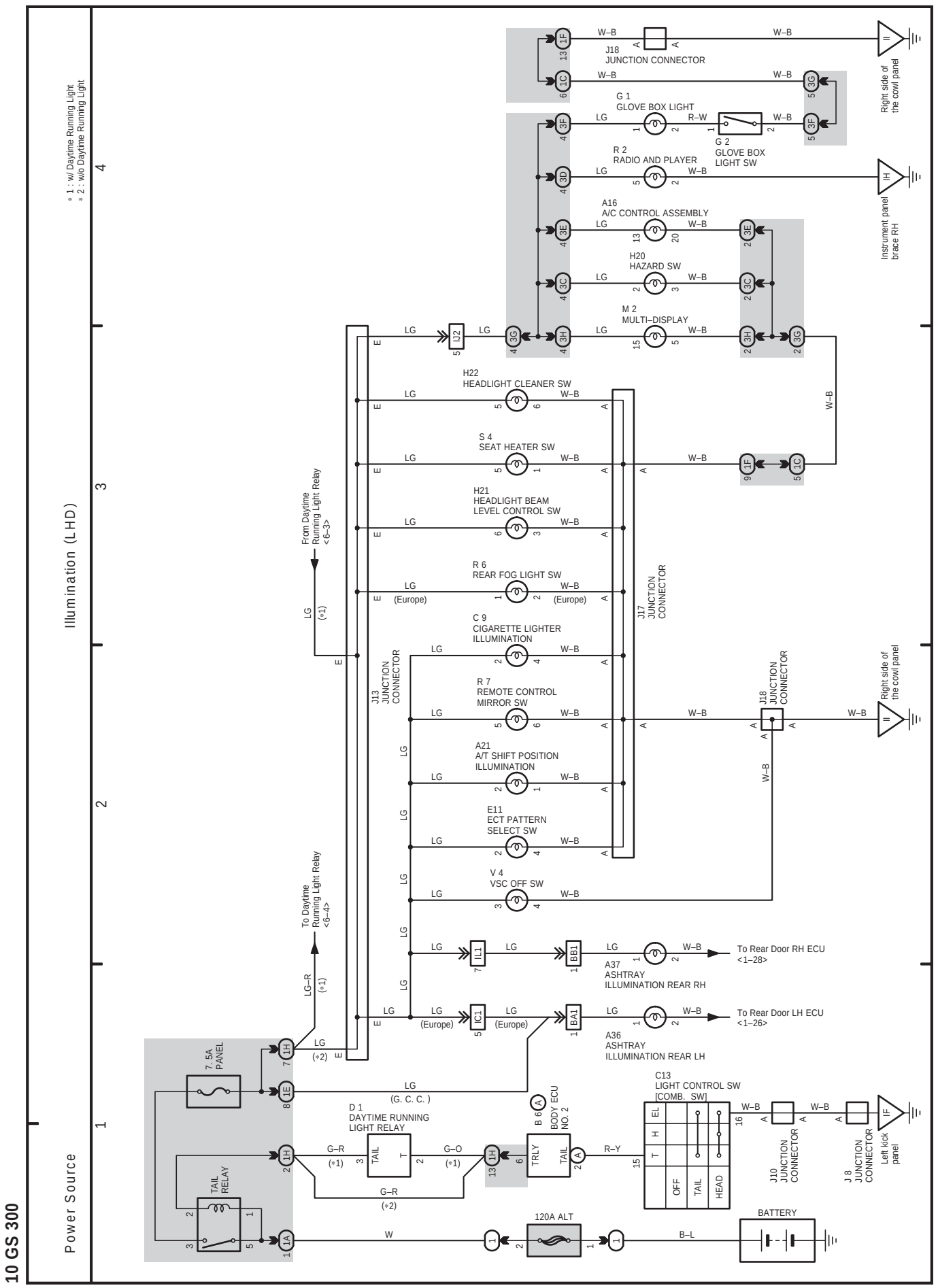
Power Source
Illumination (LHD)
* 1 : w/ Daytime Running Light
* 2 : w/o Daytime Running Light
J18 JUNCTION CONNECTOR
G 1 GLOVE BOX LIGHT
G 2 GLOVE BOX LIGHT SW
R 2 RADIO AND PLAYER
A16 A/C CONTROL ASSEMBLY
H20 HAZARD SW
M 2 MULTI–DISPLAY
H22 HEADLIGHT CLEANER SW
S 4 SEAT HEATER SW
H21 HEADLIGHT BEAM LEVEL CONTROL SW
R 6 REAR FOG LIGHT SW
C 9 CIGARETTE LIGHTER ILLUMINATION
R 7 REMOTE CONTROL MIRROR SW
A21 A/T SHIFT POSITION ILLUMINATION
E11 ECT PATTERN SELECT SW
V 4 VSC OFF SW
A37 ASHTRAY ILLUMINATION REAR RH
A36 ASHTRAY ILLUMINATION REAR LH
To Rear Door RH ECU <1–28>
To Rear Door LH ECU <1–26>
J17 JUNCTION CONNECTOR
J13 JUNCTION CONNECTOR
J18 JUNCTION CONNECTOR
From Daytime Running Light Relay <6–3>
To Daytime Running Light Relay <6–4>
Right side of the cowl panel
Instrument panel brace RH
7. 5A PANEL
TAIL RELAY
D 1 DAYTIME RUNNING LIGHT RELAY
B 6 BODY ECU NO. 2
C13 LIGHT CONTROL SW [COMB. SW]
J10 JUNCTION CONNECTOR
J 8 JUNCTION CONNECTOR
Left kick panel
120A ALT
BATTERY