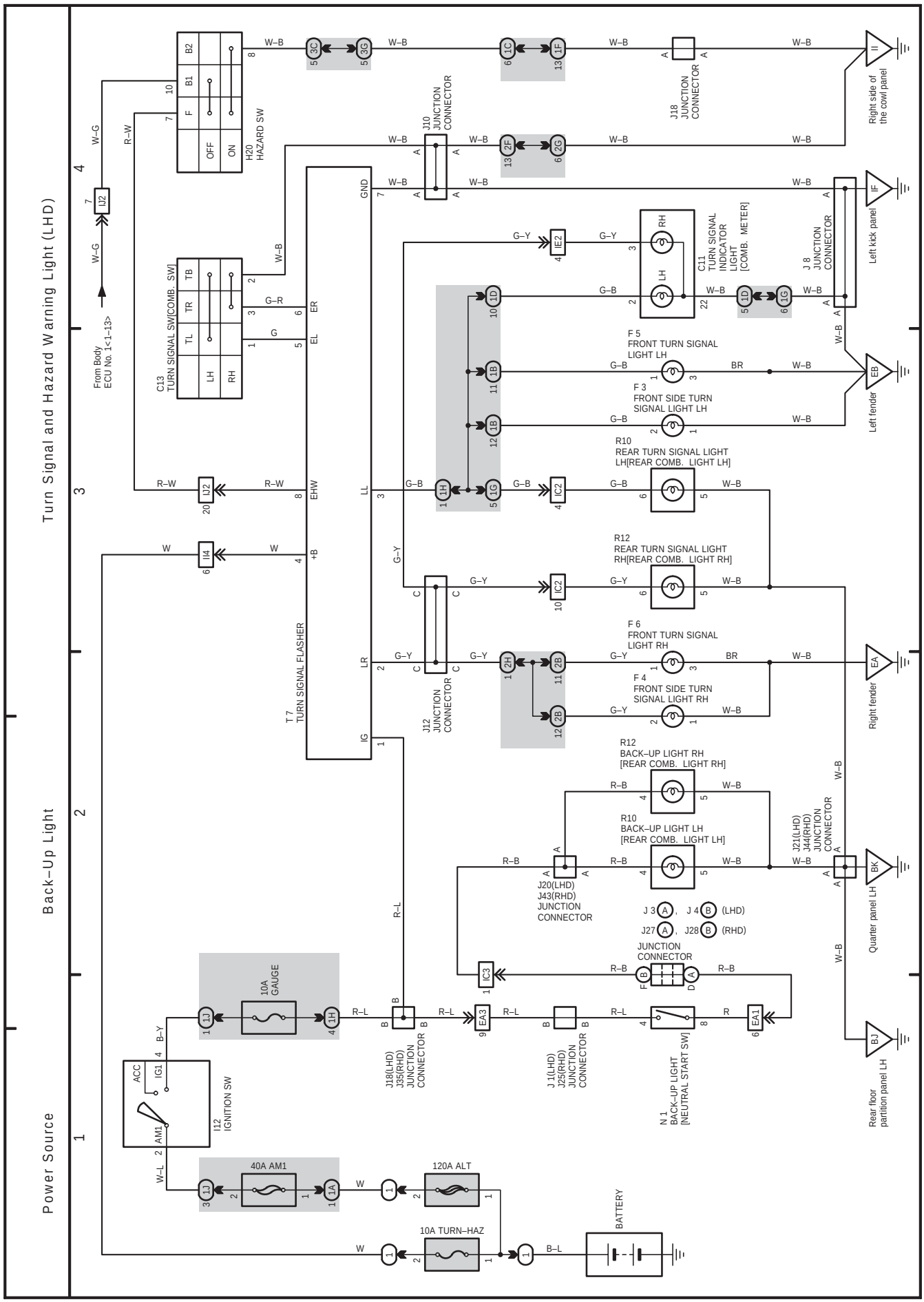
Turn Signal and Hazard Warning Light (LHD)
Back–Up Light
Power Source
H20 HAZARD SW
C13 TURN SIGNAL SW[COMB. SW]
From Body ECU No. 1<1–13>
T 7 TURN SIGNAL FLASHER
J10 JUNCTION CONNECTOR
J18 JUNCTION CONNECTOR
Right side of the cowl panel
Left kick panel
C11 TURN SIGNAL INDICATOR LIGHT [COMB. METER]
J 8 JUNCTION CONNECTOR
F 5 FRONT TURN SIGNAL LIGHT LH
F 3 FRONT SIDE TURN SIGNAL LIGHT LH
Left fender
R10 REAR TURN SIGNAL LIGHT LH[REAR COMB. LIGHT LH]
R12 REAR TURN SIGNAL LIGHT RH[REAR COMB. LIGHT RH]
F 6 FRONT TURN SIGNAL LIGHT RH
F 4 FRONT SIDE TURN SIGNAL LIGHT RH
Right fender
J12 JUNCTION CONNECTOR
R12 BACK–UP LIGHT RH [REAR COMB. LIGHT RH]
R10 BACK–UP LIGHT LH [REAR COMB. LIGHT LH]
J21(LHD) J44(RHD) JUNCTION CONNECTOR
J20(LHD) J43(RHD) JUNCTION CONNECTOR
J 3 A, J 4 B (LHD)
J27 A, J28 B (RHD)
JUNCTION CONNECTOR
Quarter panel LH
10A GAUGE
J18(LHD) J35(RHD) JUNCTION CONNECTOR
J 1(LHD) J25(RHD) JUNCTION CONNECTOR
N 1 BACK–UP LIGHT [NEUTRAL START SW]
Rear floor partition panel LH
I12 IGNITION SW
40A AM1
120A ALT
10A TURN–HAZ
BATTERY