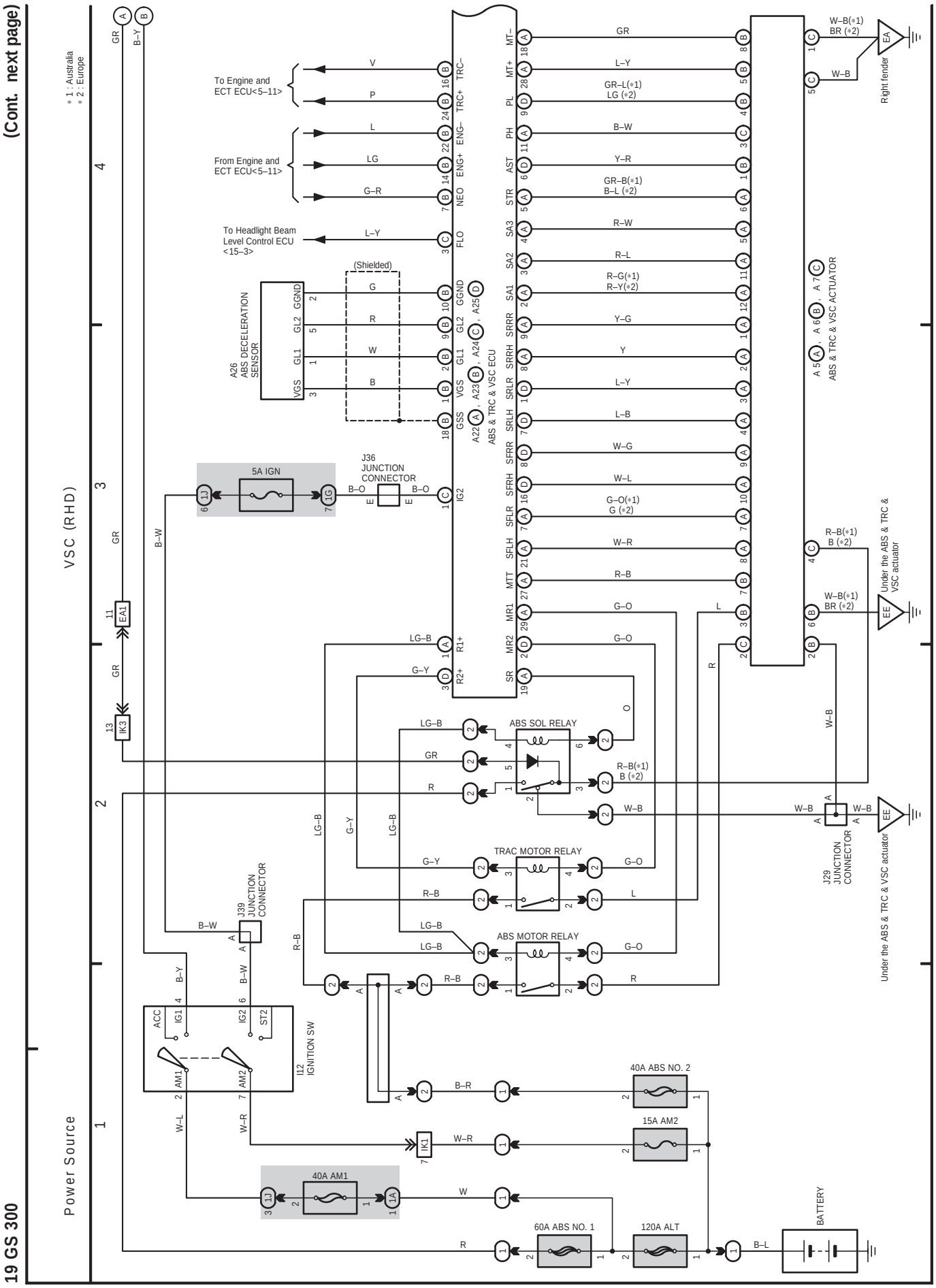
(Cont. next page)
VSC (RHD)
Power Source
* 1 : Australia
* 2 : Europe
To Engine and ECT ECU<5–11>
From Engine and ECT ECU<5–11>
To Headlight Beam Level Control ECU <15–3>
(Shielded)
A26 ABS DECELERATION SENSOR
ABS & TRC & VSC ECU
ABS & TRC & VSC ACTUATOR
5A IGN
J36 JUNCTION CONNECTOR
ABS SOL RELAY
TRAC MOTOR RELAY
ABS MOTOR RELAY
J39 JUNCTION CONNECTOR
I12 IGNITION SW
40A ABS NO. 2
15A AM2
40A AM1
60A ABS NO. 1
120A ALT
BATTERY
Right fender
Under the ABS & TRC & VSC actuator
J29 JUNCTION CONNECTOR
19 GS 300

(Cont. next page)

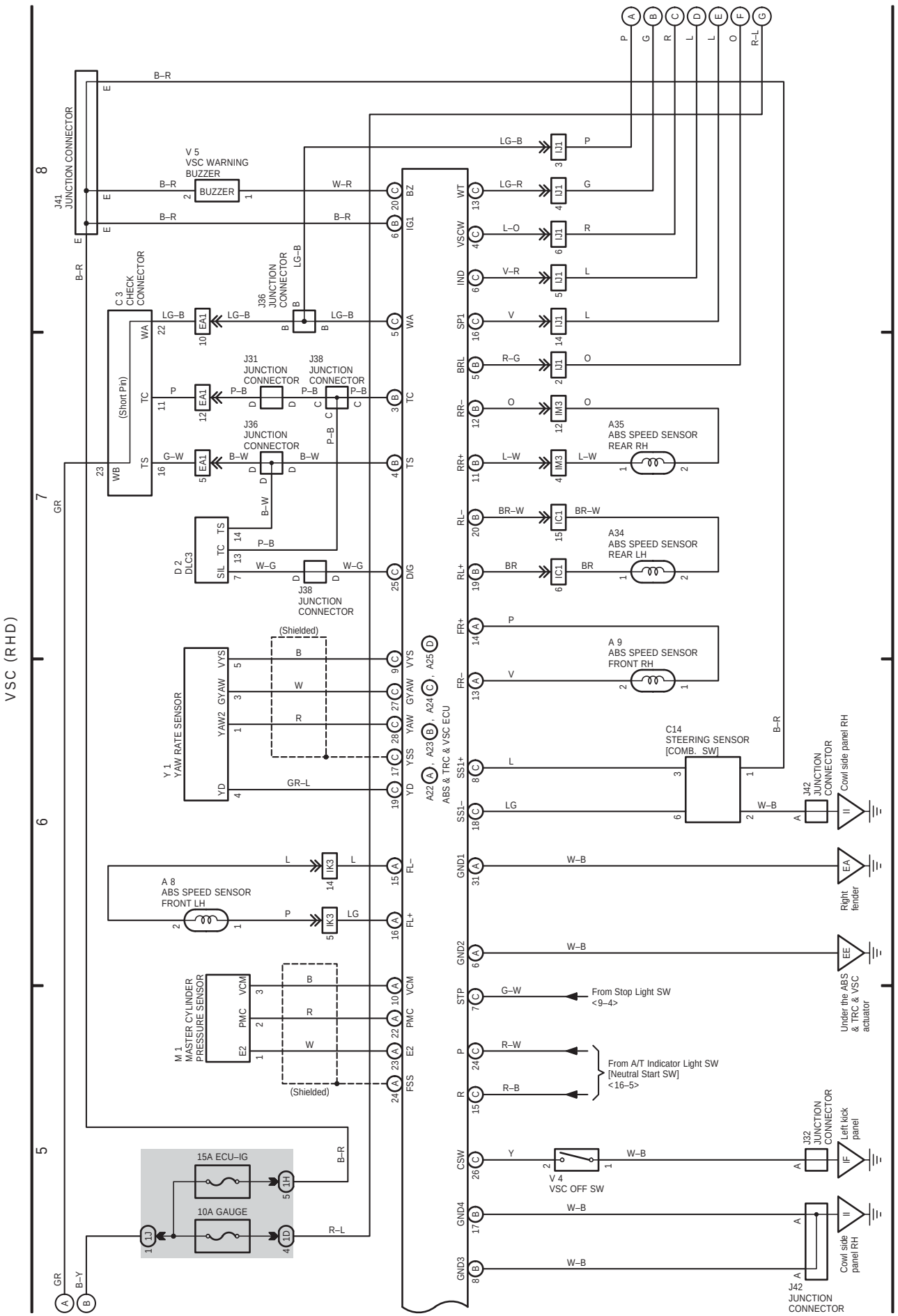

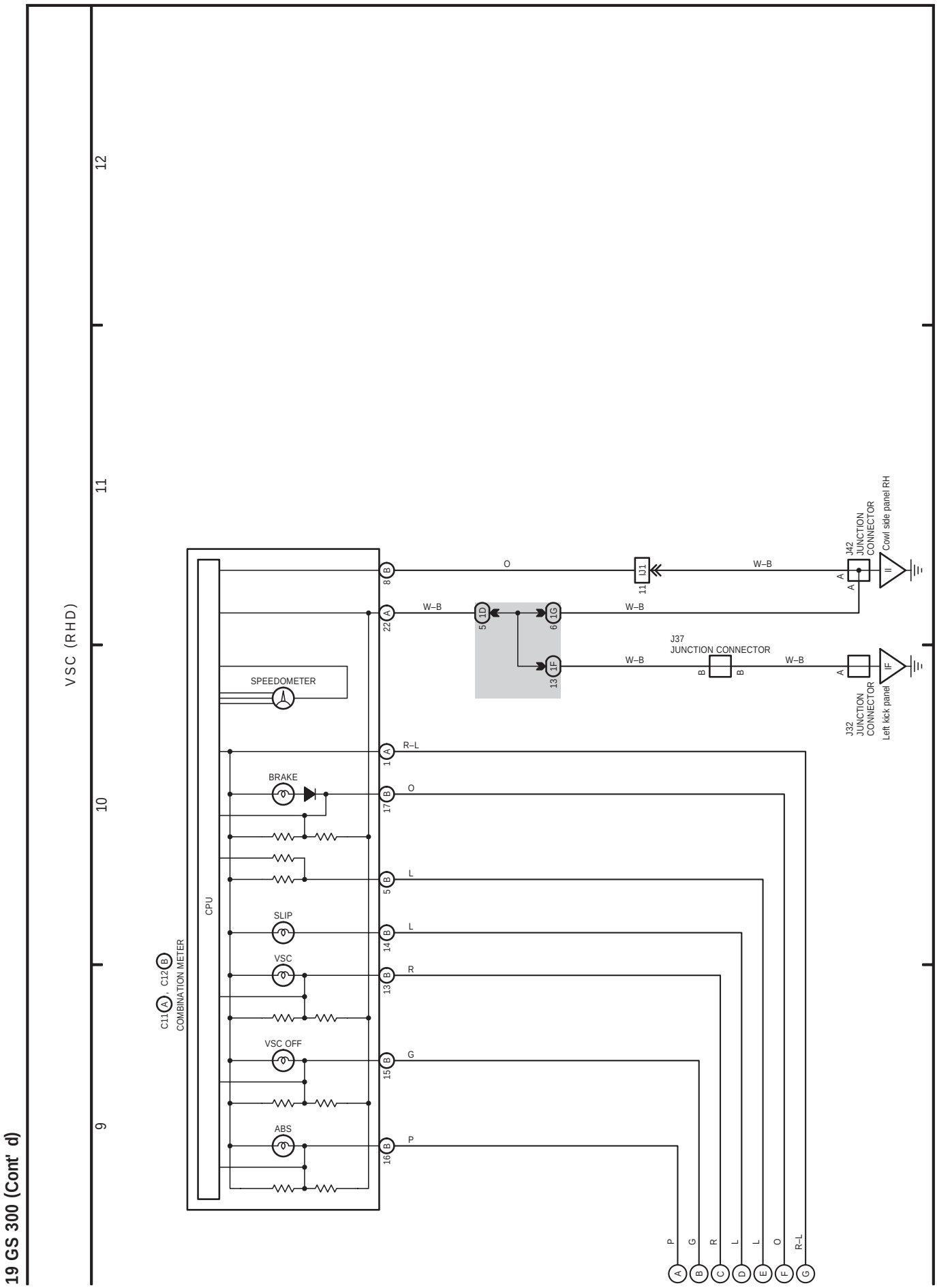
VSC (RHD)
9
10
11
12
C11 A, C12 B
COMBINATION METER
CPU
SPEEDOMETER
BRAKE
SLIP
VSC
VSC OFF
ABS
8 B
22 A
1 A
17 B
5 B
14 B
13 B
15 B
16 B
O
W–B
R–L
L
R
G
P
D11
11
5 1D
6 1G
13 1F
J37
JUNCTION CONNECTOR
B
J42
JUNCTION
CONNECTOR
Cowl side panel RH
II
J32
JUNCTION
CONNECTOR
Left kick panel
IF
A
B
C
D
E
F
G