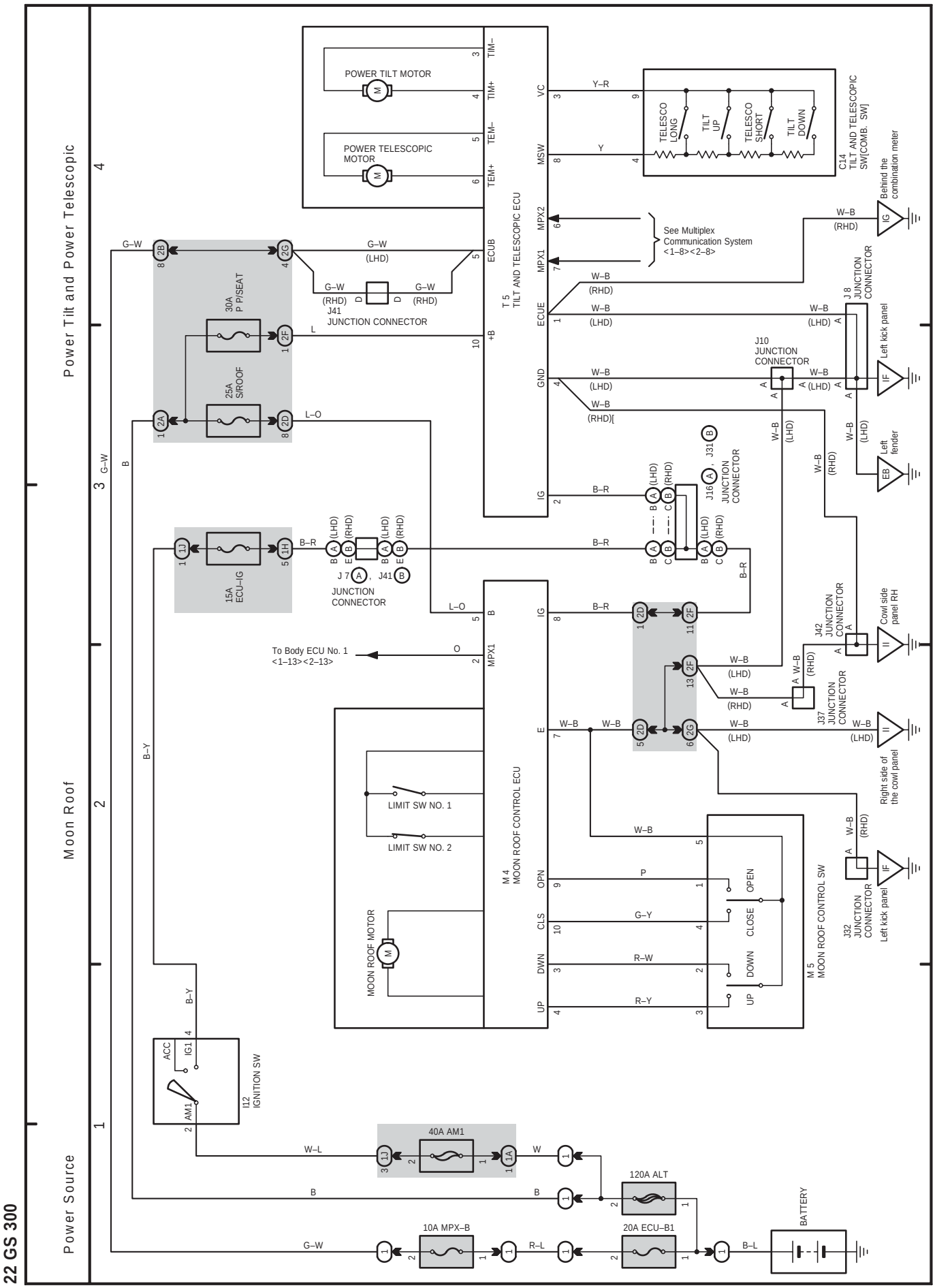
Power Source
Moon Roof
Power Tilt and Power Telescopic
POWER TILT MOTOR
POWER TELESCOPIC MOTOR
T 5
TILT AND TELESCOPIC ECU
TIM–
TIM+
TEM–
TEM+
VC
MSW
MPX2
MPX1
ECUB
ECUE
+B
GND
IG
TELESCO LONG
TILT UP
TELESCO SHORT
TILT DOWN
C14
TILT AND TELESCOPIC SW[COMB. SW]
Behind the combination meter
See Multiplex Communication System <1–8><2–8>
J 8
JUNCTION CONNECTOR
Left kick panel
J10
JUNCTION CONNECTOR
Left fender
J16
JUNCTION CONNECTOR
J 7
J41
JUNCTION CONNECTOR
J41
JUNCTION CONNECTOR
30A P P/SEAT
25A S/ROOF
15A ECU–IG
To Body ECU No. 1 <1–13><2–13>
M 4
MOON ROOF CONTROL ECU
LIMIT SW NO. 1
LIMIT SW NO. 2
MOON ROOF MOTOR
OPN
CLS
DWN
UP
M 5
MOON ROOF CONTROL SW
OPEN
CLOSE
DOWN
UP
J42
JUNCTION CONNECTOR
Cowl side panel RH
J37
JUNCTION CONNECTOR
Right side of the cowl panel
J32
JUNCTION CONNECTOR
Left kick panel
I12
IGNITION SW
ACC
IG1
AM1
40A AM1
120A ALT
10A MPX–B
20A ECU–B1
BATTERY