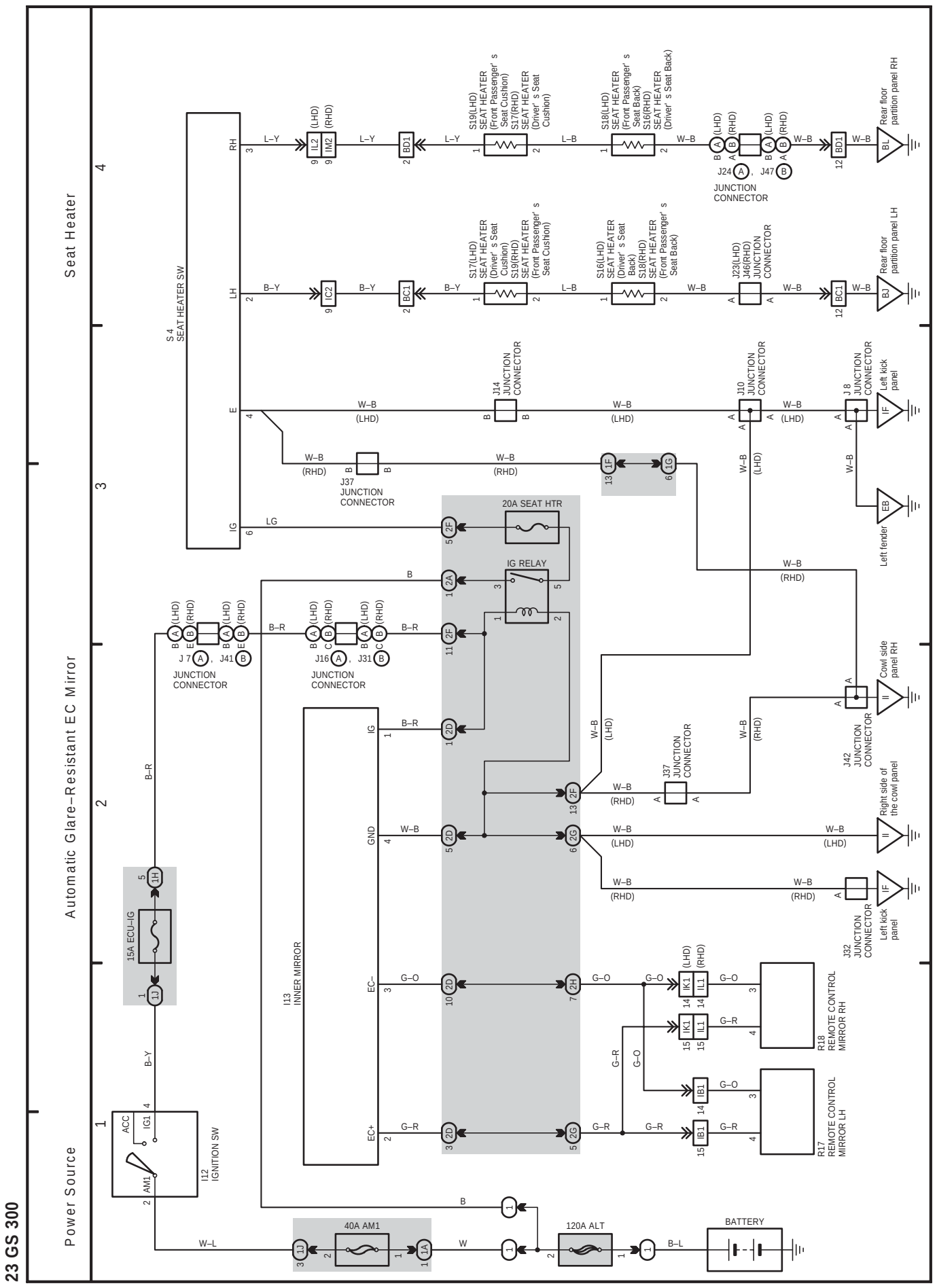
Power Source
Automatic Glare–Resistant EC Mirror
Seat Heater
S 4
SEAT HEATER SW
RH
LH
E
IG
L–Y
B–Y
W–B
(LHD)
(RHD)
L–B
B–R
G–O
G–R
LG
IL2
IM2
IC2
BD1
BC1
S19(LHD)
SEAT HEATER
(Front Passenger' s
Seat Cushion)
S17(RHD)
SEAT HEATER
(Driver' s Seat
Cushion)
S18(LHD)
SEAT HEATER
(Front Passenger' s
Seat Back)
S16(RHD)
SEAT HEATER
(Driver' s Seat Back)
J24
J47
JUNCTION
CONNECTOR
Rear floor
partition panel RH
S17(LHD)
SEAT HEATER
(Driver' s Seat
Cushion)
S19(RHD)
SEAT HEATER
(Front Passenger' s
Seat Cushion)
S16(LHD)
SEAT HEATER
(Driver' s Seat
Back)
S18(RHD)
SEAT HEATER
(Front Passenger' s
Seat Back)
J23(LHD)
J46(RHD)
JUNCTION
CONNECTOR
Rear floor
partition panel LH
J14
JUNCTION
CONNECTOR
J10
JUNCTION
CONNECTOR
J 8
JUNCTION
CONNECTOR
Left kick
panel
J37
JUNCTION
CONNECTOR
Left fender
20A SEAT HTR
IG RELAY
J 7
J41
J16
J31
Cowl side
panel RH
J42
JUNCTION
CONNECTOR
Right side of
the cowl panel
J32
JUNCTION
CONNECTOR
Left kick
panel
15A ECU–IG
I13
INNER MIRROR
GND
EC–
EC+
IK1
IL1
IB1
R18
REMOTE CONTROL
MIRROR RH
R17
REMOTE CONTROL
MIRROR LH
ACC
IG1
AM1
I12
IGNITION SW
40A AM1
120A ALT
BATTERY
W–L
W
B–L