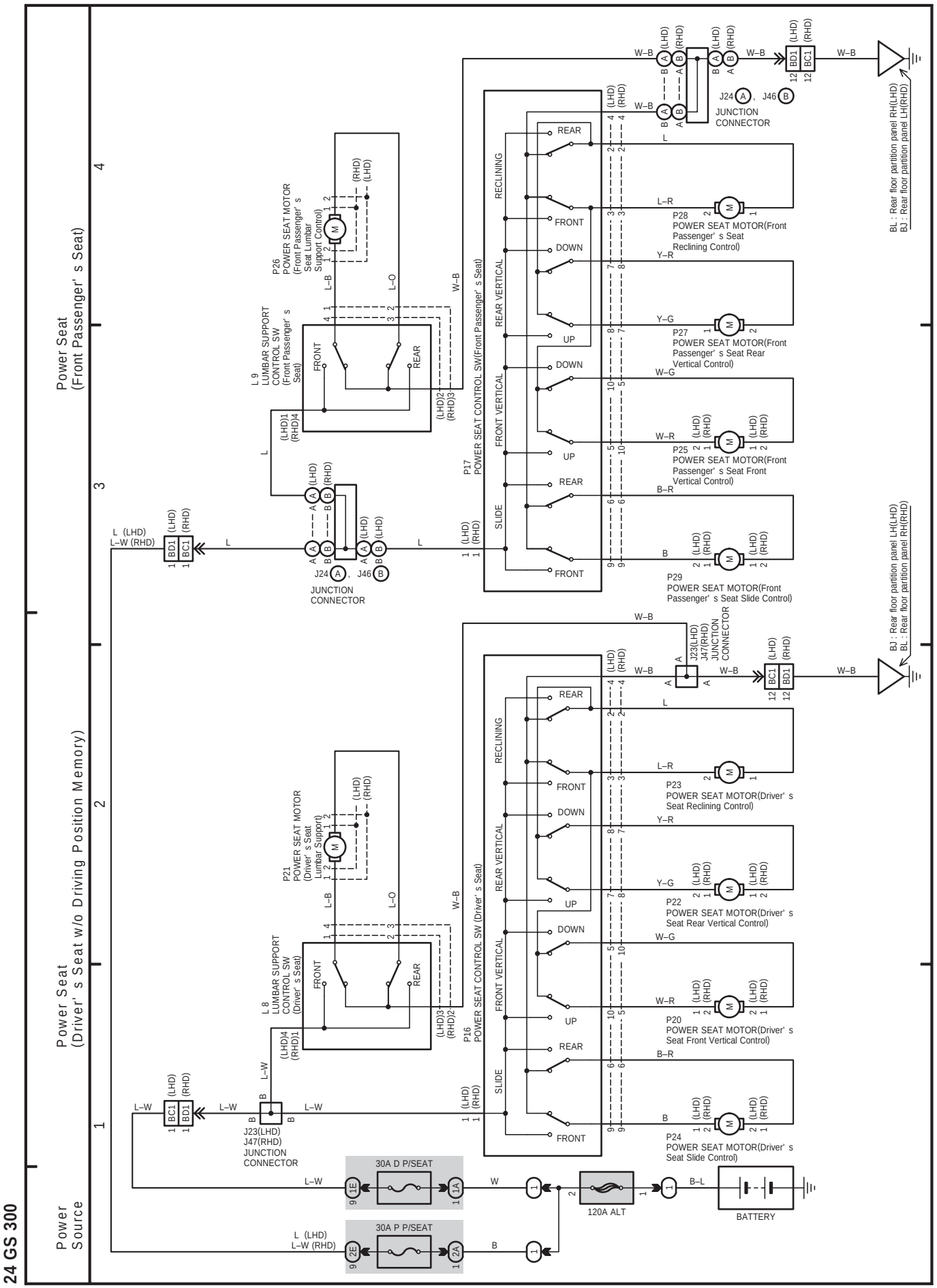
24 GS 300
Power Source
Power Seat (Driver' s Seat w/o Driving Position Memory)
Power Seat (Front Passenger' s Seat)
1
2
3
4
30A D P/SEAT
30A P P/SEAT
120A ALT
BATTERY
J23(LHD) J47(RHD) JUNCTION CONNECTOR
J24 , J46
JUNCTION CONNECTOR
P21 POWER SEAT MOTOR (Driver' s Seat Lumbar Support)
P26 POWER SEAT MOTOR (Front Passenger' s Seat Lumbar Support Control)
L 8 LUMBAR SUPPORT CONTROL SW (Driver' s Seat)
L 9 LUMBAR SUPPORT CONTROL SW (Front Passenger' s Seat)
P16 POWER SEAT CONTROL SW (Driver' s Seat)
P17 POWER SEAT CONTROL SW(Front Passenger' s Seat)
RECLINING
REAR VERTICAL
FRONT VERTICAL
SLIDE
P23 POWER SEAT MOTOR(Driver' s Seat Reclining Control)
P22 POWER SEAT MOTOR(Driver' s Seat Rear Vertical Control)
P20 POWER SEAT MOTOR(Driver' s Seat Front Vertical Control)
P24 POWER SEAT MOTOR(Driver' s Seat Slide Control)
P28 POWER SEAT MOTOR(Front Passenger' s Seat Reclining Control)
P27 POWER SEAT MOTOR(Front Passenger' s Seat Rear Vertical Control)
P25 POWER SEAT MOTOR(Front Passenger' s Seat Front Vertical Control)
P29 POWER SEAT MOTOR(Front Passenger' s Seat Slide Control)
BJ : Rear floor partition panel LH(LHD)
BL : Rear floor partition panel RH(RHD)
BJ : Rear floor partition panel RH(LHD)
BL : Rear floor partition panel LH(RHD)