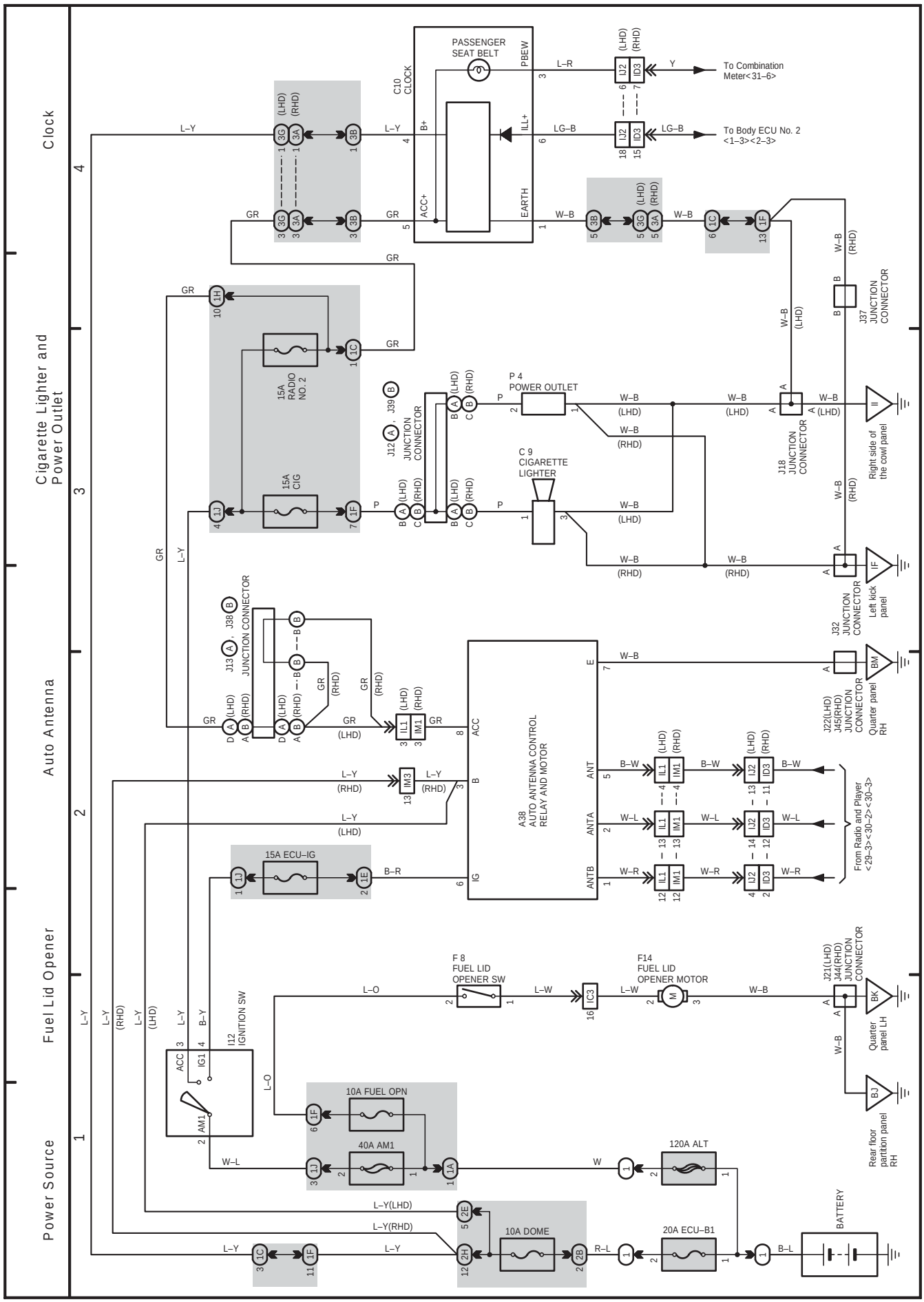
Clock
Cigarette Lighter and Power Outlet
Auto Antenna
Fuel Lid Opener
Power Source
C10 CLOCK
PASSENGER SEAT BELT
To Combination Meter<31–6>
To Body ECU No. 2 <1–3><2–3>
15A RADIO NO. 2
15A CIG
P 4 POWER OUTLET
C 9 CIGARETTE LIGHTER
J12, J39 JUNCTION CONNECTOR
J37 JUNCTION CONNECTOR
J18 JUNCTION CONNECTOR
Right side of the cowl panel
J32 JUNCTION CONNECTOR
Left kick panel
J22(LHD) J45(RHD) JUNCTION CONNECTOR
Quarter panel RH
J13, J38 JUNCTION CONNECTOR
A38 AUTO ANTENNA CONTROL RELAY AND MOTOR
From Radio and Player <29–3><30–2><30–3>
15A ECU–IG
F 8 FUEL LID OPENER SW
F14 FUEL LID OPENER MOTOR
J21(LHD) J44(RHD) JUNCTION CONNECTOR
Quarter panel LH
Rear floor partition panel RH
I12 IGNITION SW
10A FUEL OPN
40A AM1
120A ALT
10A DOME
20A ECU–B1
BATTERY