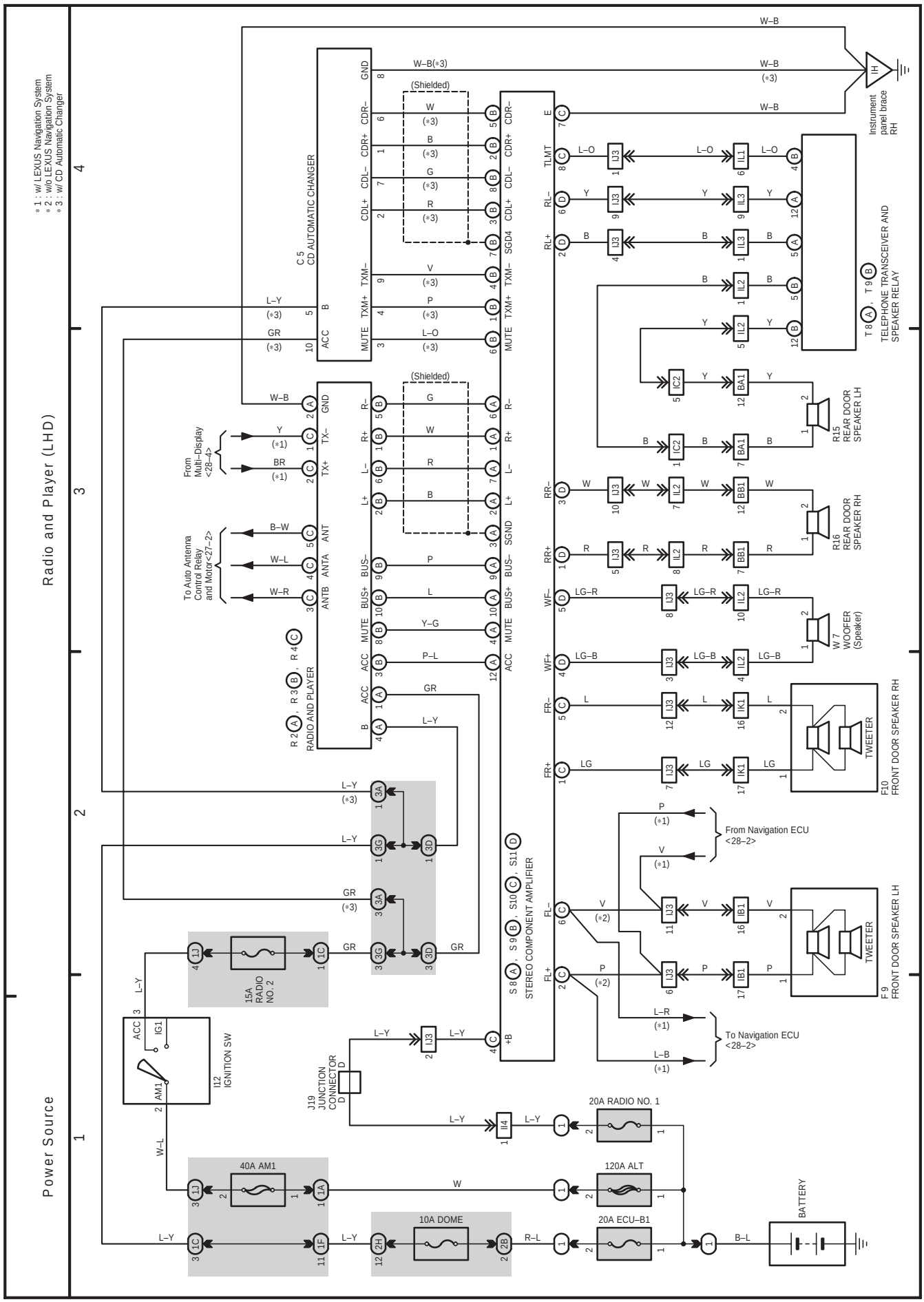
Power Source
Radio and Player (LHD)
* 1 : w/ LEXUS Navigation System
* 2 : w/o LEXUS Navigation System
* 3 : w/ CD Automatic Changer
C 5
CD AUTOMATIC CHANGER
RADIO AND PLAYER
R 2 A , R 3 B , R 4 C
From Multi–Display <28–4>
To Auto Antenna Control Relay and Motor <27–2>
(Shielded)
S 8 A , S 9 B , S 10 C , S 11 D
STEREO COMPONENT AMPLIFIER
Instrument panel brace RH
IH
TELEPHONE TRANSCEIVER AND SPEAKER RELAY
T 8 A , T 9 B
R15 REAR DOOR SPEAKER LH
R16 REAR DOOR SPEAKER RH
W 7 WOOFER (Speaker)
F10 FRONT DOOR SPEAKER RH
F 9 FRONT DOOR SPEAKER LH
TWEETER
From Navigation ECU <28–2>
To Navigation ECU <28–2>
I12 IGNITION SW
ACC
IG1
AM1
15A RADIO NO. 2
40A AM1
J19 JUNCTION CONNECTOR D
20A RADIO NO. 1
120A ALT
10A DOME
20A ECU–B1
BATTERY