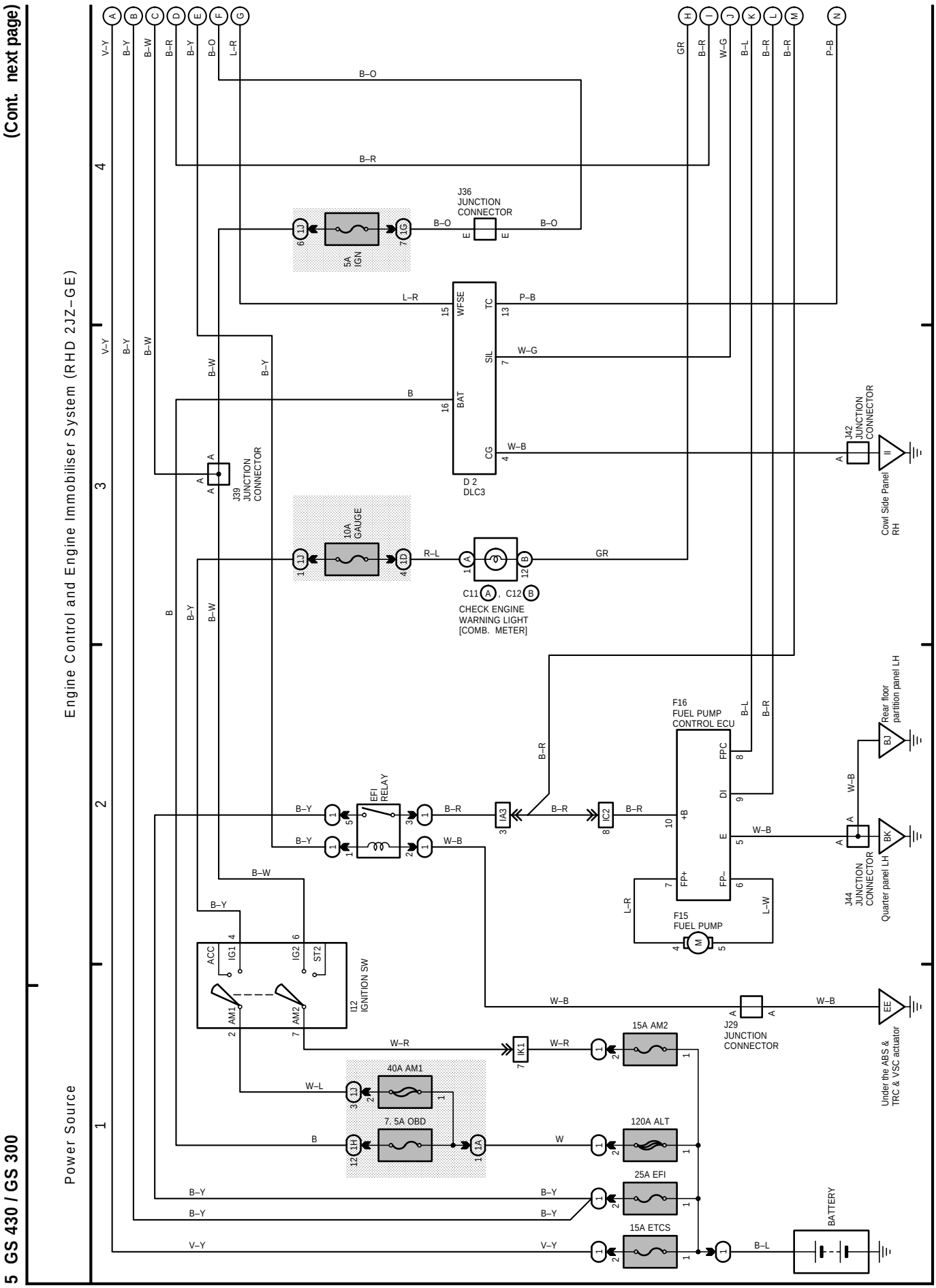
5 GS 430 / GS 300
(Cont. next page)
Power Source
Engine Control and Engine Immobiliser System (RHD 2JZ–GE)
J36 JUNCTION CONNECTOR
5A IGN
D 2 DLC3
WFSE
TC
SIL
BAT
CG
J39 JUNCTION CONNECTOR
10A GAUGE
CHECK ENGINE WARNING LIGHT [COMB. METER]
J42 JUNCTION CONNECTOR
Cowl Side Panel RH
F16 FUEL PUMP CONTROL ECU
FPC
DI
+B
E
FP+
FP–
F15 FUEL PUMP
EFI RELAY
I12 IGNITION SW
ACC
IG1
IG2
ST2
AM1
AM2
J44 JUNCTION CONNECTOR
Quarter panel LH
Rear floor partition panel LH
J29 JUNCTION CONNECTOR
Under the ABS & TRC & VSC actuator
15A AM2
40A AM1
7. 5A OBD
120A ALT
25A EFI
15A ETCS
BATTERY

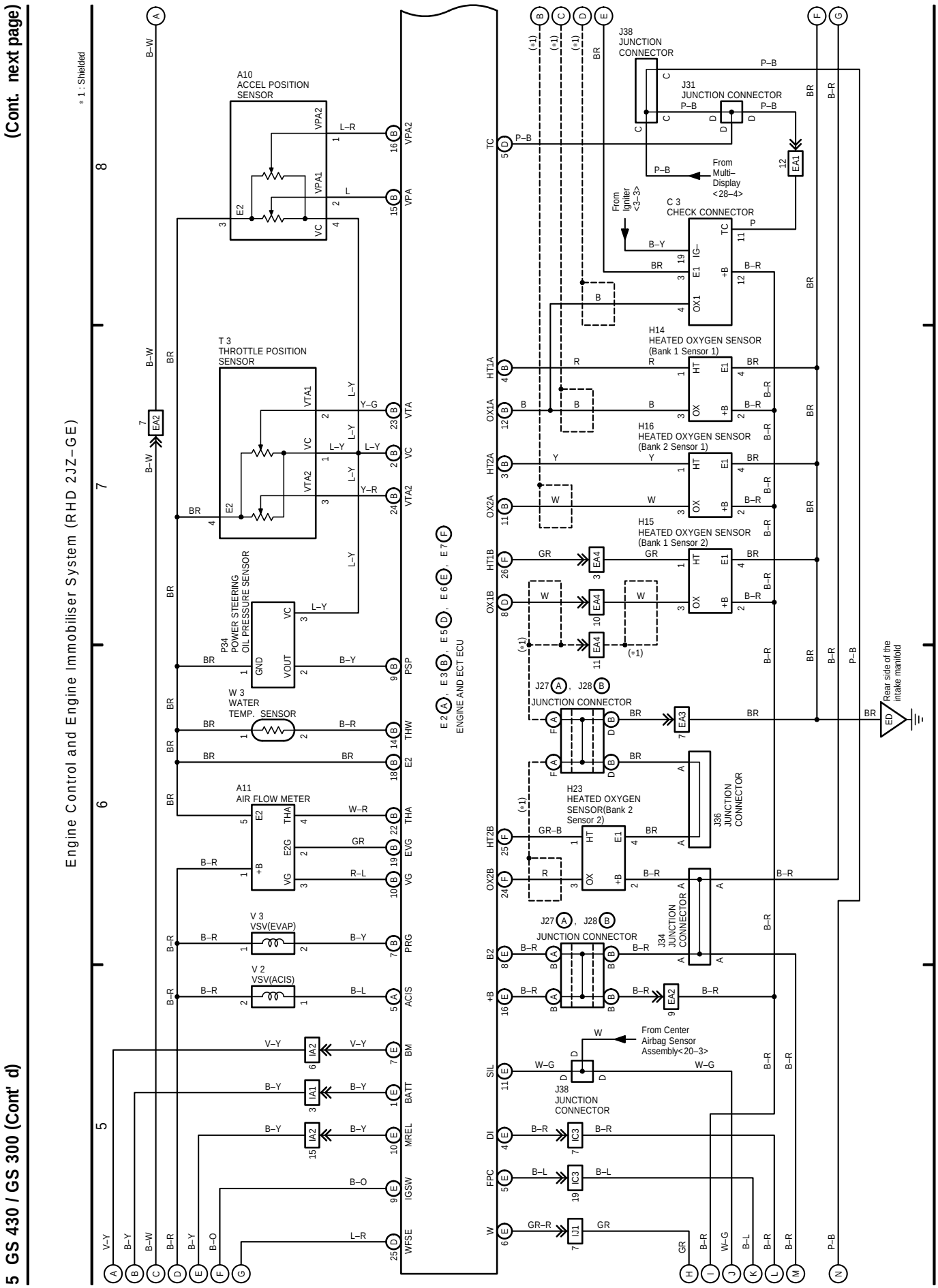
5 GS 430 / GS 300 (Cont' d)
(Cont. next page)
Engine Control and Engine Immobiliser System (RHD 2JZ–GE)
* 1 : Shielded
A10
ACCEL POSITION
SENSOR
T 3
THROTTLE POSITION
SENSOR
P34
POWER STEERING
OIL PRESSURE SENSOR
W 3
WATER
TEMP. SENSOR
A11
AIR FLOW METER
V 3
VSV(EVAP)
V 2
VSV(ACIS)
E 2 (A), E 3 (B), E 5 (D), E 6 (E), E 7 (F)
ENGINE AND ECT ECU
J38
JUNCTION
CONNECTOR
J31
JUNCTION CONNECTOR
From
Multi–
Display
<28–4>
From
Igniter
<3–3>
C 3
CHECK CONNECTOR
H14
HEATED OXYGEN SENSOR
(Bank 1 Sensor 1)
H16
HEATED OXYGEN SENSOR
(Bank 2 Sensor 1)
H15
HEATED OXYGEN SENSOR
(Bank 1 Sensor 2)
J27 (A), J28 (B)
JUNCTION CONNECTOR
H23
HEATED OXYGEN
SENSOR(Bank 2
Sensor 2)
J36
JUNCTION
CONNECTOR
J34
JUNCTION
CONNECTOR
From Center
Airbag Sensor
Assembly<20–3>
J38
JUNCTION
CONNECTOR
Rear side of the
intake manifold
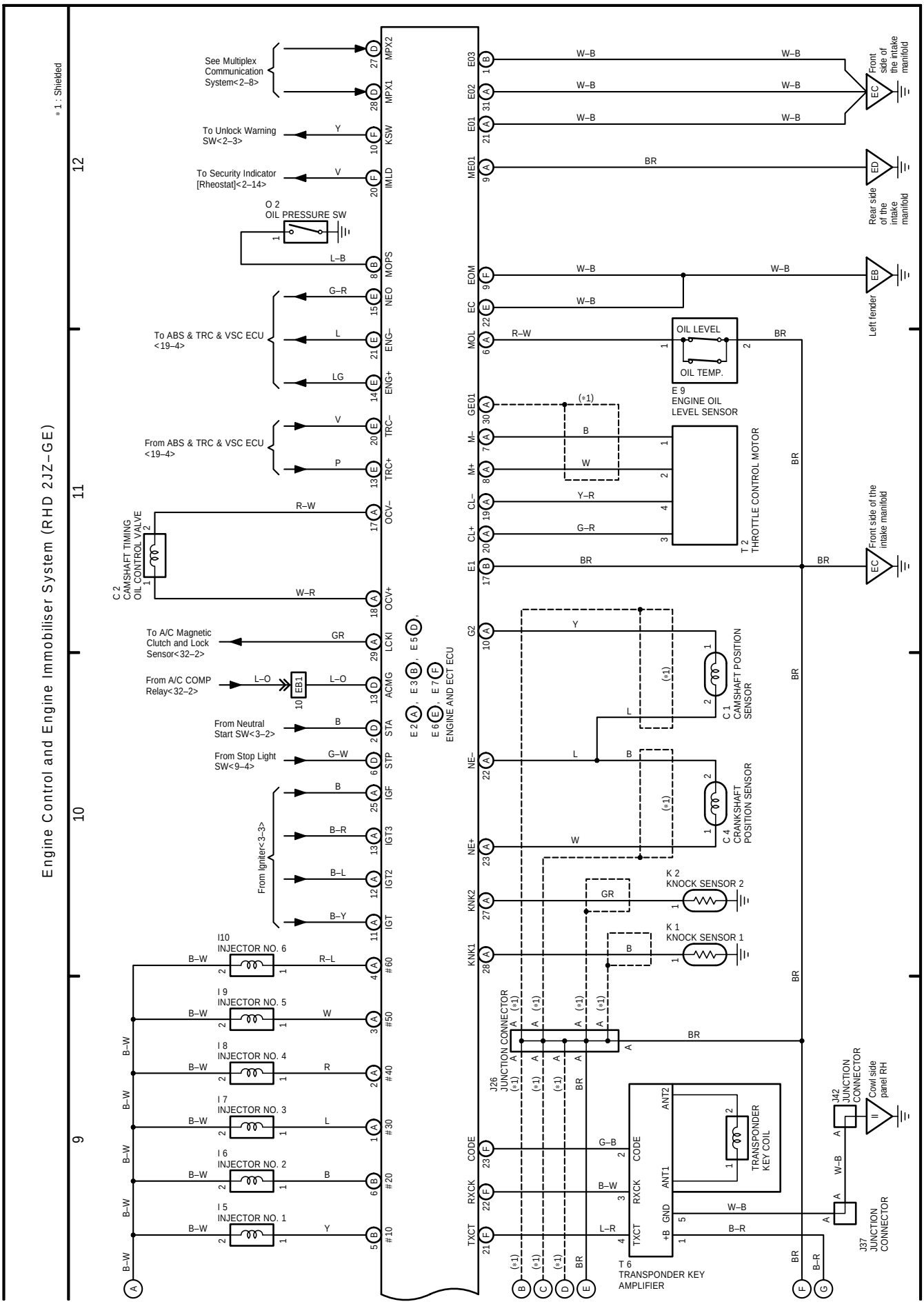
5 GS 430 / GS 300 (Cont' d)